ELECTRONIC DEVICES LTD

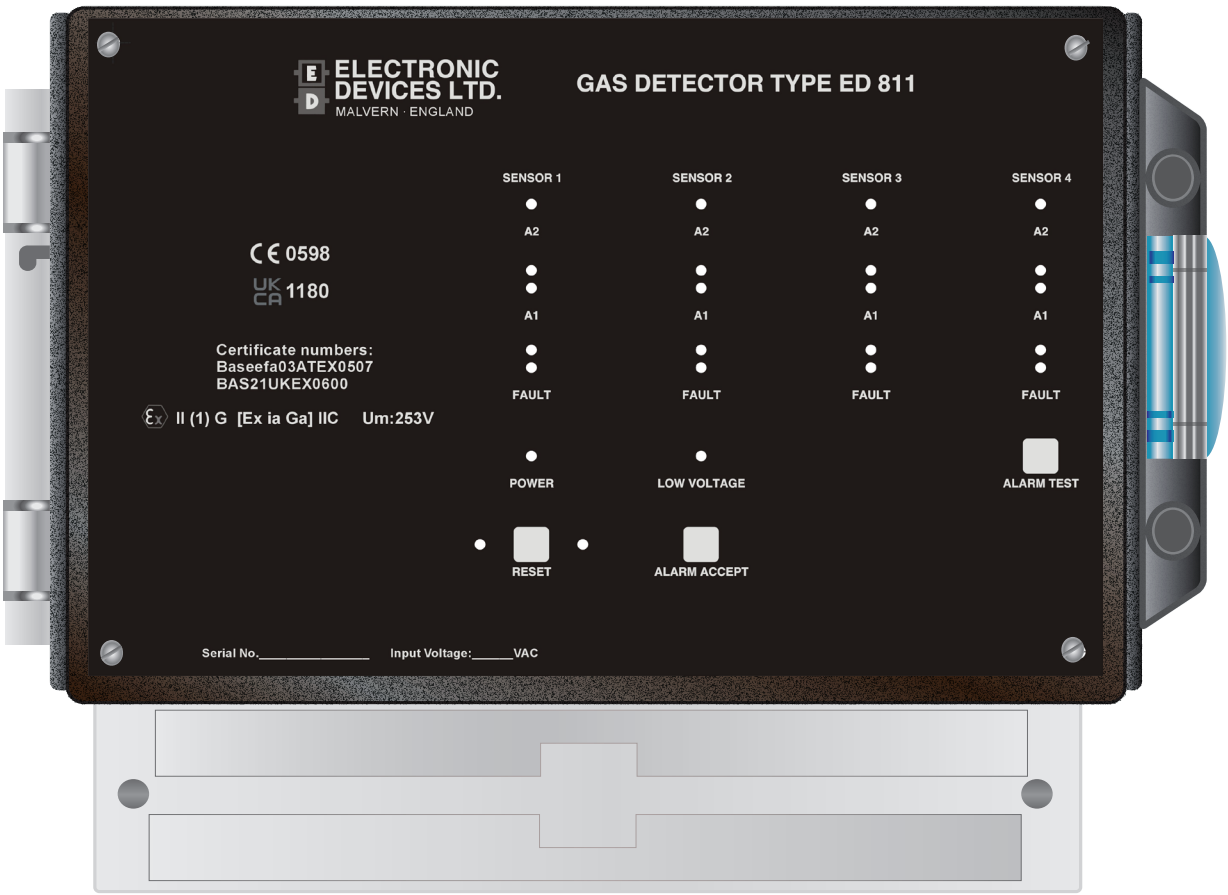

ED811

GAS DETECTOR

INSTRUCTION MANUAL

Address: Enigma House, Enigma Business Park, Malvern, Worcestershire, WR14 1GD
Tel: +44 (0)1684 891500 **Fax:** +44 (0)1684 891600
Email: sales@electronic-devices.co.uk **Website:** www.electronic-devices.co.uk

INDEX

	PAGE
IMPORTANT NOTES	**2**
ATEX ESSENTIAL SAFETY REQS	**2**
MARKING	**4**
GENERAL	**4**
INSTALLATION	**4**
CONTROL UNIT	4
SENSOR WIRING	5
SENSORS	**6**
SITTING	6
UNUSED SENSOR POSITIONS	6
OPERATING INSTRUCTIONS	**6**
ENGINNERS OVERRIDE	6
CALIBRATION	7
SEMICONDUCTOR SENSORS	7
EDS/C & EDS/P SENSORS	7
CONFORMITY & CERTIFICATES	**9**
DECLARATION OF CONFORMITY	9
ED811 Ex-TYPE EXAMINATION CERTIFICATE	12
ZB Ex-TYPE EXAMINATION CERTIFICATE	18

IMPORTANT NOTES

1. THE EQUIPMENT MUST NOT BE MODIFIED IN ANY WAY SINCE MODIFICATIONS WILL INVALIDATE INTRINSIC SAFETY CERTIFICATION.

2. DANGEROUS VOLTAGES ARE PRESENT WITHIN THIS 240V CONTROL UNIT AND CARE SHOULD TAKEN DURING SERVICING AS HIGH VOLTAGES ARE PRESENT ON THE BASE, PRINTED CIRCUIT BOARD AND MAY BE PRESENT ON OUTPUT CONTACTS.

3. IT IS IMPORTANT TO NOTE THAT THE ED811 CONTAINS ZENER BARRIERS, TYPE ZB1, WHICH ARE "POTTED" IN EPOXY RESIN. THE ZENER BARRIERS CONTAIN FUSES, WHICH ONCE DAMAGED ARE NOT REPLACEABLE. THE FUSES INSIDE THE ZENER BARRIER WILL BLOW IF EVEN TEMPORARY SHORT CIRCUITS ARE PLACED ON THE SENSOR WIRING THUS RENDERING THE ZENER BARRIER INOPERABLE AND ARE NOT REPAIRABLE. GREAT CARE SHOULD THEREFORE BE TAKEN TO AVOID INADVERTENT SHORT CIRCUITS.

4. ELECTRONIC DEVICES STRONGLY RECOMMEND CONSULTATION OF THE HSE PUBLICATION EH40, WHICH LISTS THE PERMITTED LEVELS OF EXPOSURE TO MOST TOXIC GASES.

ATEX ESSENTIAL SAFETY REQUIREMENTS

The ED811 Gas Detectors internally mounted Zener Barriers and associated gas sensors are ATEX / UKCA certified Intrinsically Safe and the important requirements listed below need to be followed.

1. The equipment must only be installed, operated and maintained by trained competent personnel.

2. This apparatus has been designed in accordance with EN60079-0:2018 and EN60079-11:2012 which are harmonised. Therefore the apparatus has been designed to meet the fault tolerant requirements of Associate Apparatus for Category 'ia'.

3. The installation and maintenance must be in accordance with all appropriate international, national and local standard codes of practice and site regulations for intrinsically safe apparatus.

4. The installation and maintenance must be in accordance with the instructions contained in this installation and maintenance manual.

5. Access to the circuitry must not be made during operation.

6. This product is an associated electrical apparatus and must not be installed in the hazardous area without the provision of further certified hazardous area protection.

7. The product must not be subjected to mechanical and thermal stresses in excess of those permitted in the certification documentation and the instruction manual. If necessary the product must be protected by an enclosure to prevent mechanical damage.

8. The product must not be installed in a position where it may be attacked by aggressive substances.

9. The product must be protected from excessive dust by an enclosure etc.

10. The product can not be repaired by the user and must be replaced by an equivalent certified product. Repairs should only be carried out by the manufacturer or approved service centre.

MARKING

All units have a rating label which carries the following important information:-

Model type:	GAS DETECTOR TYPE ED811
Input voltage:	110VAC/220VAC/240VAC (delete as appropriate)
Vmax in; Um:	Um: 250V
Code:	[Ex ia Ga] II C
Certificate no:	CE Baseefa03ATEX0507
	UK BAS21UKEX0600
Epsilon x, gas group and category:	Ex II (1) G
CE marking, Notified body number:	CE 0598
UK marking Notified body number:	UK CA 1180
Serial no:	( ) - serial number must be entered here
Year of construction:	( ) - year of manufacture must be entered here

GENERAL

The ED811 is a fixed installation gas detection system, which can detect a wide range of flammable and toxic gases dependent upon sensor type used.

The ED811 is designed for mains input voltage and it is important to ensure the input voltage of the control unit is the same as the supply available. Special consideration should be given to the “Hazardous Area common connection” terminal. This should normally be connected to a good quality earth suitable for intrinsically safe equipment.

Attention is drawn to the need for correct cabling, particularly to the sensors located in the Hazardous Area. The cable supplied by ED for use with the ED811 has been tested to ensure correct parameters, see installation section of this manual.

Attention is also drawn to the need for calibration soon after installation. When supplied alarm levels are approximately set for the target gas (if stated with order) so that a measure of immediate protection is obtained once correct operation has been ensured.

INSTALLATION

Note only ED manufactured sensors, which are certified Intrinsically Safe, can be connected to the ED811 and fitted in the Hazardous Area. The ED811 control unit and all uncertified equipment should be located in the Safe Area only.

CONTROL UNIT

The unit should be mounted in a convenient position for the operator away from possible mechanical damage or ingress of moisture and allowing the clear-hinged lid to swing open for ease of calibration etc.

The enclosure is fixed to a bulkhead with screws through one keyhole and two fixed holes in the base. To obtain access to the two lower slotted holes remove the terminal cover. Note it is not usually necessary to remove the front panel and PCB assembly during installation or calibration.

Only the relay contacts marked NON ALARM ACCEPT should be used for control functions as they will remain in the alarm state until the gas has cleared and the unit reset. Sensor cable entry must only be made through the intended hole via either the

standard rubber grommet or cable gland.

Sensor cables must not cross or lie over each other or safe area cables see ***Fig 1***.

In addition to the zener barrier fuses (which cannot be replaced) each sensor is individually fused on the base board PCB.

If a sensor fails to respond the nominal 5V between blue and brown terminals should be checked and the 160mA quick blow (F) changed if necessary.

SENSOR WIRING

The Sensor cable should meet the following specification as listed in the Zener Barrier (ZB1) certificate, see page 15.

The total capacitance of the cable must not exceed 6.8uF for EDS/C and EDS/P or 8.8uF for the EDF sensor. Also the inductance or inductance to resistance (L/R) ratio should not exceed 0.06mH or 14uH/Ω respectively.

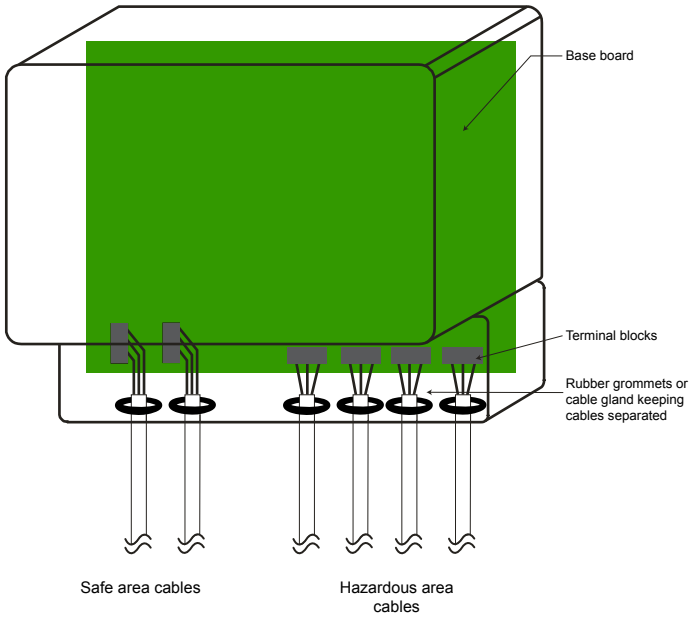

FIG 1

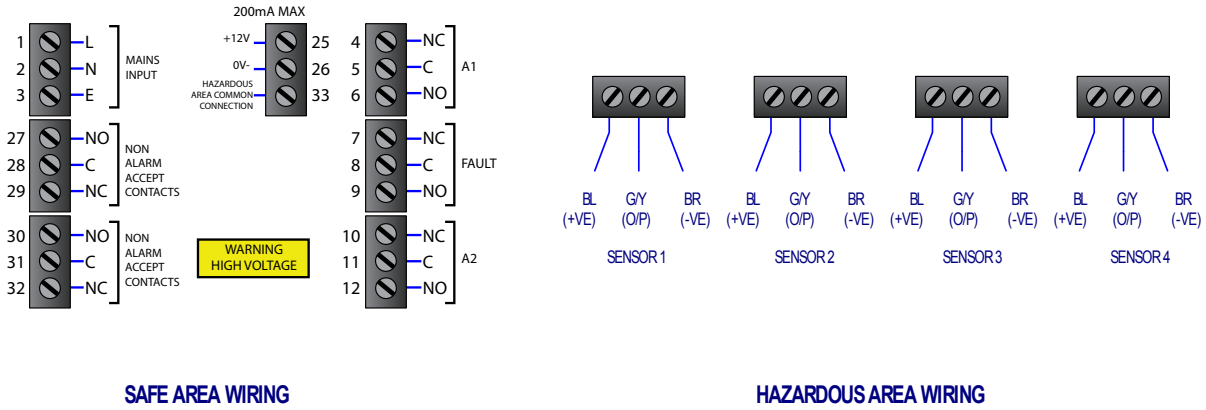

SAFE AREA WIRING

HAZARDOUS AREA WIRING

FIG 2

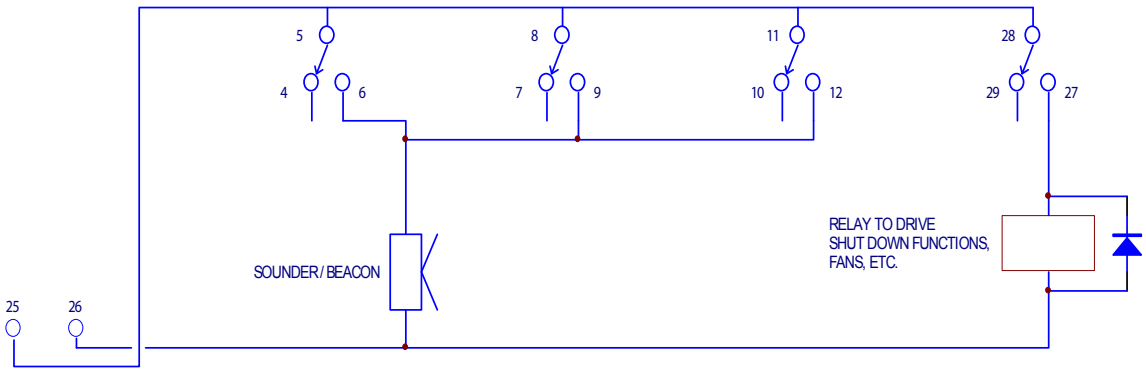

Relay contact rating: 2A at 240VAC Non Inductive

FIG 3

SENSORS

SENSORS

Type EDF 1B, 2B, 3B and 3Bfig are semiconductor elements housed in a certified flameproof stainless steel housing. The housing has a male M32 thread which can be screwed into a conduit or suitable junction box. The semiconductor sensors are available in the following types:-

a) EDF1B flameproof. Suitable for the detection of flammable gases such as Ammonia, Butane, Propane and some toxic gases, for more gases see list available.

b) EDF2B flameproof. Suitable for the detection of flammable gases such as Methane, Hydrogen and some toxic gases, for more gases see list available.

c) EDF3B fig flameproof. Suitable for the detection of most Freons such as R11, R12, R22, R143A, R134A etc.

The EDS/C IS Transmitter is a intrinsically safe junction box complete with head electronics and electrochemical cell gas sensor suitable for the detection of various toxic gases. Many different electrochemical cells are available and EDL should be consulted to advise on correct sensor type.

The EDS/P IS Transmitter is a intrinsically safe junction box complete with head electronics and catalytic (pellistor) gas sensor suitable for the detection of flammable gases. Contact EDL for advice on correct sensor type.

SITING

The sensor heads should be placed lower than gas appliances when the gas to be detected is heavier than air. If the gas is lighter than air then the sensors should be placed above possible sources of leaks. Consideration should be given to the temperature of the gas at the time during a leak, for example if a serious Ammonia leak occurs in a refrigeration plant it can leak as a liquid and stay at floor level for some time even though Ammonia is lighter than air. In this instance sensors at low and high levels are normally fitted.

Attention should be given to the probable gas flow in each particular installation to site the sensors in the most advantagous position. In living quarters particular consideration should be given to carbon monoxide, it is advisable that some of the sensors are mounted at head height.

The sensors are sealed into their stainless steel enclosures and no attempt should be made to open them on site, if necessary they should be returned to EDL for repair/servicing.

UNUSED SENSOR POSITIONS

When all of the sensor positions are not being used the spare position should have the dip switches on the control PCB set to “standard sensors” and a terminating resistor of 47KΩ fitted to avoid the fault lights and relay operating. This is normally done before the unit leaves the factory as standard.

SETUP AND CALIBRATION

When power is first applied the power light should illuminate immediately. The A1 and A2 lights of semiconductor sensors will illuminate within a few seconds and will be ready to be reset after a few minutes, provided the sensors are in clean air. The alarm lights and relays latch and the reset switch must be pressed to clear any alarms.

The output functions can be easily tested by pressing the “alarm test” button. If the “alarm accept” button is pressed any sounders or beacons connected will be muted.

When the input supply drops so low as the control unit cannot function correctly the low voltage light will illuminate and the fault relay will activate.

ENGINEERS OVERRIDE

Should be used with caution as all ALARMS are disabled for a period of approximately 30minutes. A hidden switch is located to the left of the reset switch. Pressed through the front panel using a small screwdriver all Alarms are Isolated and the Fault Buzzer sounds. Operate the hidden switch to the right of the Reset switch (keeping it pressed for several seconds) and all Alarms will be returned to the operational state and the Fault Buzzer will silence.

CALIBRATION

Before dispatch the alarm levels are approximately set for the target gas (if stated with order) or set to 25% and 50% LEL butane so that a measure of immediate protection is obtained once correct operation has been ensured.

Once the sensors and control unit have been in operation for a minimum of 24 hours calibration can be attempted. Calibration should be repeated at least every twelve months with regular checks in between.

Calibration must take place in a clean air condition to ensure accuracy.

SEMICONDUCTOR SENSORS

1. Immerse the sensor in the correct concentration for the A1 alarm, if using a continuous flow do not use a flow rate of above 0.3L/min.

2. After allowing the sensor time to settle (10-20 seconds) adjust the appropriate potentiometer located under the A1 light, accessed through the front panel. Rotating clockwise increases sensitivity until the A1 light just illuminates, if the light omes on prematurely wind anticlockwise whilst continuously pressing the reset switch until the light goes out and then clockwise until it just illuminates.

3. Immerse the sensor in the correct concentration for the A2 alarm, if using a continuous flow do not use a flow rate of above 0.3L/min.

4. After allowing the sensor time to settle (10-20 seconds) adjust the appropriate potentiometer located under the A2 light, accessed through the front panel. Rotating clockwise increases sensitivity until the A2 light just illuminates, if the light comes on prematurely wind anticlockwise whilst continuously pressing the reset switch until the light goes out and then clockwise until it just illuminates.

5. Repeat steps 1-4 for all semiconductor sensors fitted.

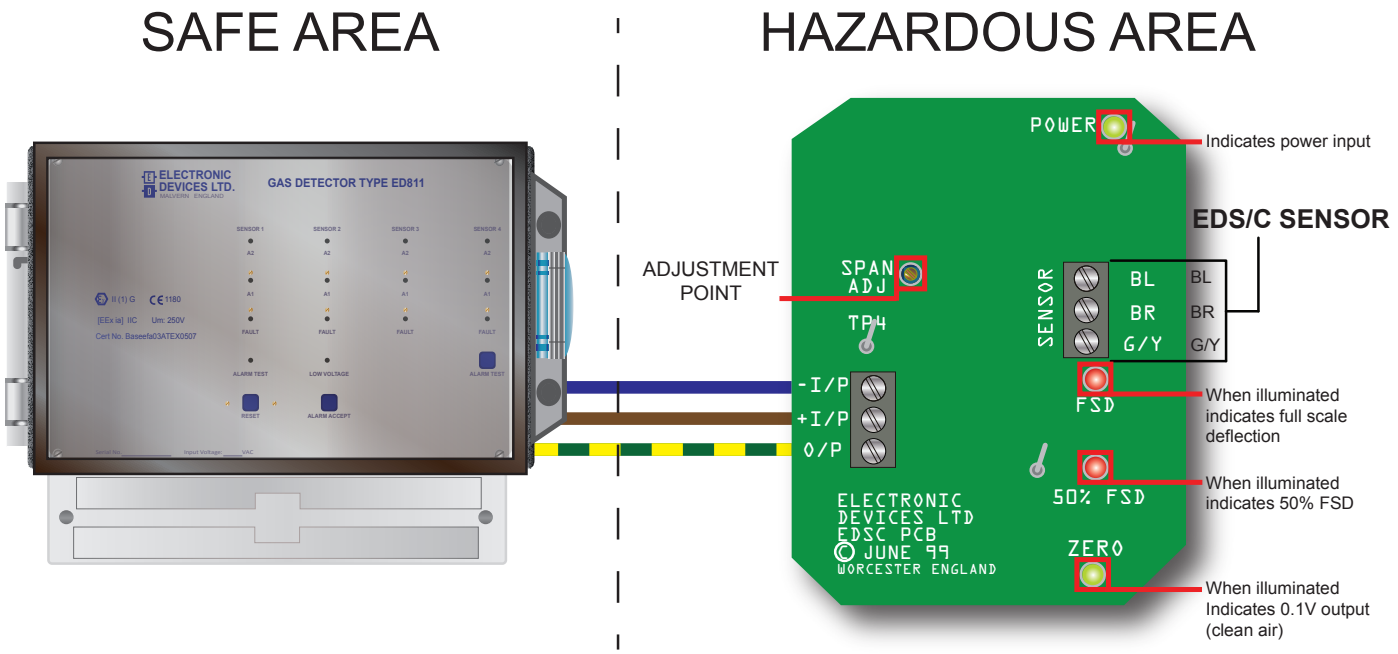

EDS/C AND EDS/P TRANSMITTERS INITIAL SETUP

It is vitally important that the ED811 and EDS/C or P transmitter are calibrated together ensuring that the ED811 indicates an alarm at the correct concentration. After installation is complete the following setup procedure should be followed matching the EDS/C or P, ED811 and cable run together.

EDS/C SENSORS

1. At EDS/C transmitter measure between – I/P and + I/P, ensure voltage reading is in the range 4.75 – 5.4V with a digital volt meter.

2. Using the correct calibration gas for your low alarm, ensure the calibration of the EDSC Transmitter using the EDSC calibration instructions. Whilst the EDSC is giving the correct output go to the ED811 control unit and adjust the A1 (located under the A1 light, accessed through the front panel) potentiometer until the A1 light just illuminates. Rotating clockwise increases sensitivity until the A1 light just illuminates, if the light comes on prematurely wind anticlockwise whilst continuously pressing the reset switch until the light goes out and then clockwise until it just illuminates.

3. Using the correct calibration gas for your high alarm, ensure the calibration of the EDSC Transmitter using the EDSC calibration instructions. Whilst the EDSC is giving the correct output go to the ED811 control unit and adjust the A2 (located under the A2 light, accessed through the front panel) potentiometer until the A2 light just illuminates. Rotating clockwise increases sensitivity until the A2 light just illuminates, if the light comes on prematurely wind anticlockwise whilst continuously pressing the reset switch until the light goes out and then clockwise until it just illuminates.

Example of calculating expected output voltage
The output of the EDSC* ranges from 0.1 to 0.5V (zero to full scale). If Full scale is 1000ppm NH3 then:

250ppm output : (0.4 x 0.25 + 0.1)	=	0.2V
500ppm output: (0.4 x 0.5 + 0.1)	=	0.3V
1000ppm output: (0.4 x 1 + 0.1)	=	0.5V

EDS/P SENSORS

1. At EDS/P transmitter measure between – I/P and + I/P, ensure voltage reading is in the range 4.0 -5.4V with a Digital volt meter.

2. Using the Zero adjustment potentiometer on the EDS/P, rotate clockwise until the 25% lamp is just illuminated or 0.2V is measured on the O/P terminal w.r.t 0V.

3. Go to the ED811 Control unit and adjust the A1 potentiometer (located below the A1 light and accessed through the front panel) until the A1 light just illuminates. Rotating clockwise increases sensitivity until the A1 light just illuminates, if the light comes on prematurely wind anticlockwise whilst continuously pressing the reset switch until the light goes out and then clockwise until it just illuminates.

4. Back at the EDS/P again using the Zero adjustment potentiometer on the EDS/P, rotate clockwise until the 50% lamp is just illuminated or 0.3V is measured on the O/P terminal w.r.t 0V.

5. Go to the ED811 Control unit and adjust the A2 potentiometer (located below the A2 light and accessed through the front panel) until the A2 light just illuminates.

6. Using the EDS/P instructions return the output to Zero and calibrate the sensor. Remember the Sensor requires a minimum of 24 hours to settle otherwise the calibration WILL NOT be accurate.

Example of calculating expected output voltage
The output of the EDSP* ranges from 0.1 to 0.5V (0 to full scale). If Full scale is 10,000ppm NH3 then:

2,500ppm output: (0.4 x 0.25) + 0.1	=	0.2V
5,000ppm output: (0.4 x 0.5) + 0.1	=	0.3V
10,000ppm output: (0.4 x 1) + 0.1	=	0.5V

* The output range stated is correct when the EDSC / EDSP is connected to the ED811, if tested separately the output range will be 0.2 to 1.0VDC.

ELECTRONIC DEVICES LIMITED

EU/UK Declaration of Conformity

Manufacturer:	**Electronic Devices Ltd**
Address:	Enigma House Enigma Business Park Malvern Worcestershire WR14 1GD
Product:	**GAS DETECTOR TYPE ED81***
Model Type:	ED810, ED811
Notified Body:	**SGS Fimko Oy** **0598** Takomotie FI-00380 Helsinki Finland **SGS Baseefa Ltd** **1180** Rockhead Business park Standen Lane **Buxton, SK17 9RZ**
Certificate No.:	**ATEX Baseefa03ATEX0507** **UKCA BAS21UKEX0600**
Marking:	Group II Category(1)G [Ex ia Ga] IIC

We hereby declare in our sole responsibility that the product, which is the subject of this declaration, is in conformity with the following standards or normative documents:

Following the provisions of Directive:

Directive 2014/34/EU
Regulations SI 2016, UKSI 2016: 1107

Harmonised / Designated Standards Used:

EN 60079-0: 2018

EN 60079-11: 2012

Other Standards and Specifications:

This product has been manufactured, finally inspected and tested under a quality system, which the notified body has approved.

Date: 15 Dec 2021
Place of Issue: Malvern

Geoff Southall, C.Eng. MIEE. MRIN
Company Owner

Gas Detector Type ED81* - Dec 2021 (Revision 11)

ELECTRONIC DEVICES LIMITED

EU/UK Declaration of Conformity

Manufacturer:	**Electronic Devices Ltd**
Address:	Enigma House Enigma Business Park Malvern Worcestershire WR14 1GD
Product:	**SHUNT ZENER DIODE SAFETY BARRIER TYPE ZB***
Model Type:	ZB1, ZB2, ZB3, ZB4, ZB5, ZB6
Notified Body:	**SGS Fimko Oy 0598** Takomotie FI-00380 Helsinki Finland **SGS Baseefa Ltd 1180** Rockhead Business park Standen Lane **Buxton, SK17 9RZ**
Certificate No.:	**ATAX BAS99ATEX7149U** **UKCA BAS21UKEX0599U**
Marking:	Group II Category(1)G [Ex ia Ga] IIC (-20°C≤Ta ≤+60°C)

We hereby declare in our sole responsibility that the product, which is the subject of this declaration, is in conformity with the following standards or normative documents:

Following the provisions of Directive:

Directive 2014/34/EU
Regulations SI 2016, UKSI 2016: 1107

Harmonised / Designated Standards Used:

EN IEC 60079-0: 2018

EN 60079-11: 2012

Other Standards and Specifications:

This product has been manufactured, finally inspected and tested under a quality system, which the notified body has approved.

Date: 15 Dec 2021
Place of Issue: Malvern

Geoff Southall, C.Eng. MIEE. MRIN
Company Owner

Shunt Zener Diode Safety Barrier Type ZB* - Dec 2021 (Revision 11)

EU/UK Declaration of Conformity

Manufacturer:	**Electronic Devices Ltd**
Address:	Enigma House Enigma Business Park Malvern Worcestershire WR14 1GD
Product:	**SHUNT ZENER DIODE SAFETY BARRIER TYPE ZB***
Model Type:	ZB8
Notified Body:	**SGS Fimko Oy 0598** Takomotie FI-00380 Helsinki Finland **SGS Baseefa Ltd 1180** Rockhead Business park Standen Lane **Buxton, SK17 9RZ**
Certificate No.:	**ATEX BAS99ATEX7149U** **UKCA BAS21UKEX0599U**
Marking:	Group II Category(1)G [Ex ia Ga] IIB (-20°C≤Ta ≤ +60°C)

We hereby declare in our sole responsibility that the product, which is the subject of this declaration, is in conformity with the following standards or normative documents:

Following the provisions of Directive:

Directives 2014/34/EU
Regulations SI 2016 , UKSI 2016: 1107

Harmonised / Designated Standards Used:
EN IEC 60079-0: 2018

EN 60079-11: 2012

Other Standards and Specifications:

This product has been manufactured, finally inspected and tested under a quality system, which the notified body has approved.

Date: 15 Dec 2021
Place of Issue: Malvern

Geoff Southall, C.Eng. MIEE. MRIN
Company Owner

Shunt Zener Diode Safety Barrier Type ZB8 – Dec 2021 (Revision 11)

1 # EU - TYPE EXAMINATION CERTIFICATE

2 **Equipment or Protective System Intended for use in Potentially Explosive Atmospheres**
Directive 2014/34/EU

3 EU - Type Examination Certificate Number: **Baseefa03ATEX0507 – Issue 3**

3.1 In accordance with Article 41 of Directive 2014/34/EU, EC-Type Examination Certificates referring to 94/9/EC that were in existence prior to the date of application of 2014/34/EU (20 April 2016) may be referenced as if they were issued in accordance with Directive 2014/34/EU. Supplementary Certificates to such EC-Type Examination Certificates, and new issues of such certificates, may continue to bear the original certificate number issued prior to 20 April 2016.

4 Product: **Gas Detector Type ED81***

5 Manufacturer: **Electronic Devices Ltd**

6 Address: **Malvern, Worcestershire, WR14 1GD**

7 This re-issued certificate extends EC Type Examination Certificate No. Baseefa03ATEX0507 to apply to product designed and constructed in accordance with the specification set out in the Schedule of the said certificate but having any variations specified in the Schedule attached to this certificate and the documents therein referred to.

8 SGS Fimko Oy, Notified Body number 0598, in accordance with Article 17 of Directive 2014/34/EU of the European Parliament and of the Council, dated 26 February 2014, certifies that this product has been found to comply with the Essential Health and Safety Requirements relating to the design and construction of products intended for use in potentially explosive atmospheres given in Annex II to the Directive.

8.1 The original certificate was issued by SGS Baseefa Ltd (UK Notified Body 1180). It, and any supplements previously issued by SGS Baseefa Ltd have been transferred to the supervision of SGS Fimko Oy (EU Notified Body 0598). The original certificate number is retained.

The examination and test results are recorded in confidential Report No. **See Certificate History**

9 Compliance with the Essential Health and Safety Requirements has been assured by compliance with:

EN IEC 60079-0:2018 **EN 60079-11:2012**

except in respect of those requirements listed at item 18 of the Schedule.

10 If the sign "X" is placed after the certificate number, it indicates that the product is subject to the Specific Conditions of Use specified in the schedule to this certificate.

11 This EU - TYPE EXAMINATION CERTIFICATE relates only to the design and construction of the specified product. Further requirements of the Directive apply to the manufacturing process and supply of this product. These are not covered by this certificate.

12 The marking of the product shall include the following:

Ⓔx II (1)G [Ex ia Ga] IIC (-20°C ≤ Ta ≤ +60°C)

SGS Fimko Oy Customer Reference No. **0344** Project File No. **20/0453**

This document is issued by the Company subject to their General Conditions for Certification Services accessible at http://www.sgs.com/en/Terms-and-Conditions.aspx. Attention is drawn to the limitation of liability, indemnification and jurisdiction issues defined therein. Any holder of this document is advised that information contained herein reflects the Company's findings at the time of their intervention only and within the limits of Client's instructions, if any. It does not necessarily indicate that the equipment may be used in particular industries or circumstances. The Company's sole responsibility is to its Client and this document does not exonerate parties to a transaction from exercising all their rights and obligations under the transaction documents. This document cannot be reproduced except in full, schedule included, without prior written approval of the Company. Any unauthorized alteration, forgery or falsification of the content or appearance of this document is unlawful and offenders may be prosecuted to the fullest extent of the law.

SGS Fimko Oy
Särkiniementie 3
P.O. Box 30 FI-00211 Helsinki Finland
Telephone +358 (0)9 696 361 Fax. +358 (0)9 692 5474
e-mail sgs.fimko@sgs.com
web site www.sgs.fi
Business ID 0978538-5

Tuomas Hänninen
SGS Fimko Oy

13 Schedule

14 Certificate Number Baseefa03ATEX0507 – Issue 3

15 Description of Product

A Gas Detector Type ED81* is a control unit designed to power and monitor up to 4 remote gas sensors (e.g. Type EDF Gas Sensor to Baseefa03ATEX0631X or IS Transmitter Type EDS/C(P) to BAS02ATEX1233) which can detect a wide range of flammable and toxic gases depending on the type of sensor used.

There are 2 control units:

- ED810- designed for 12v or 24v DC power supplies
- ED811 – designed for mains power supplies.

The control circuits are housed, together with up to 4 Zener barriers Type ZB1 to BAS99ATEX7149U (which provide voltage and current limitations for up to 4 remote gas sensors) and terminals for the electrical connections, in a plastic or metal enclosure which provides a degree of protection of at least IP20.

Supply – Non-hazardous Area Terminals

U_m = 253V

Output Parameters (per Channel, 1-4)

U_o = 8.8V C_i = 0

I_o = 1.043A L_i = 0

P_o = 2W

The capacitance and either the inductance or the inductance to resistance ratio (L/R) of the load connection to each channel must not exceed the following values:

Group	Capacitance	Inductance or L/R Ratio	
	µF	mH	µH/Ω
IIC	6.8 (8.8)	30	14
IIB	24.4 (26.4)	90	42
IIA	68.4 (70.4)	240	112

Figures in the parentheses may be used when connected to Gas Sensor Type EDF.

16 Report Number

See Certificate History

17 Specific Conditions of Use

None.

18 Essential Health and Safety Requirements

In addition to the Essential Health and Safety Requirements (EHSRs) covered by the standards listed at item 9, the following are considered relevant to this product, and conformity is demonstrated in the report:

Clause	Subject	Compliance
1.2.7	Protection against other hazards (LVD type requirements, etc.)	Manufacturer responsibility
1.4.1	External effects	User/Installer responsibility
1.4.2	Aggressive substances, etc.	User/Installer responsibility

19 Drawings and Documents

New drawings submitted for this issue of certificate:

Number	Sheet	Issue	Date	Description
FPDGMV6	1 of 1	-	07/12/2021	ED810 Front Panel Label
FPDGMV4	1 of 1	-	07/12/2021	ED811 Front Panel Label

These drawings are common to BAS21UKEX0600.

Current drawings which remain unaffected by this issue:

Number	Sheet	Issue	Date	Description
FPDGMV4.cdr	1 of 1	-	11	ED810 Front Panel Label
ED10BBCT	1 of 1	5	12.3.08	ED810 Base PCB Circuit Diagram
810 Overlay	1 of 1	2	8.3.08	ED810 PCB Overlay
ED810LO-atex	1 of 2	2	8.3.08	ED810 PCB Artwork
ED810/1 GA	1 of 1	-	2.7.03	ED810 and ED811 General Assembly
Fpdgmv2.cdr	1 of 2	-	24.11.03	ED810 Front Panel Label
Fpdgmv2.cdr	2 of 2	-	24.11.03	ED811 Front Panel Label
ED810BBCL-ATEX	1 of 1	1	29.5.03	ATEX Approved Model
ED811BBCT	1 of 1	4	28.5.03	ED811 Baseboard Circuit Diagram
ED811BBCT-ATEX	1 of 1	2	5.6.03	ATEX Approved Model
811 Overlay	1 of 1	1	28.5.03	ED811BB PCB Revision for ATEX
ED811LO-atex	1 & 2	1	28.5.03	ED811BB PCB Revision for ATEX

All drawings are common to BAS21UKEX0600 and held with Baseefa03ATEX0507.

20 Certificate History

Certificate No.	Date	Comments
Baseefa03ATEX0507	30 November 2004	The release of the prime certificate. The associated test and assessment is documented in Test Report No. 03(C)0528
Baseefa03ATEX0507/1	21 August 2008	To permit minor changes to the enclosure, circuit diagram and layout of the Base PCB. See project 08/0279.
Baseefa03ATEX0507/2	11 June 2013	To permit a logo change. This issue of the certificate incorporates previously issued primary & supplementary certificates into one certificate. See project 13/0496.
Baseefa03ATEX0507 Issue 3	7 December 2021	To confirm that the design conforms to the requirements of EN IEC 60079-0:2018 and EN 60079-11:2012 including a change to the marking in line with the later standards. The associated test and assessment is documented in Test Report No. 20(C)0453/04.
For drawings applicable to each issue, see original of that issue.		

1 # UK-TYPE EXAMINATION CERTIFICATE

2 **Equipment or Protective System Intended for use in Potentially Explosive Atmospheres**
UKSI 2016:1107 (as amended) – Schedule 3A, Part 1

3 UK-Type Examination Certificate Number: **BAS21UKEX0600**

4 Product: **Gas Detector Type ED81***

5 Manufacturer: **Electronic Devices Ltd**

6 Address: **Malvern, Worcestershire, WR14 1GB**

7 This product and any acceptable variation thereto is specified in the schedule to this certificate and the documents therein referred to.

8 SGS Baseefa, Approved Body number 1180, in accordance with Regulation 43 of the Equipment and Protective Systems Intended for Use in Potentially Explosive Atmospheres Regulations 2016, UKSI 2016:1107 (as amended), certifies that this product has been found to comply with the Essential Health and Safety Requirements relating to the design and construction of products intended for use in potentially explosive atmospheres given in Schedule 1 of the Regulations.

The examination and test results are recorded in confidential Report No. **21(C)0147/02**

9 Compliance with the Essential Health and Safety Requirements has been assured by compliance with:

EN 60079-0: 2018 EN 60079-11: 2012

except in respect of those requirements listed at item 18 of the Schedule.

10 If the sign "X" is placed after the certificate number, it indicates that the product is subject to the Specific Conditions of Use specified in the schedule to this certificate.

11 This UK-TYPE EXAMINATION CERTIFICATE relates only to the design and construction of the specified product. Further requirements of the Regulations apply to the manufacturing process and supply of this product. These are not covered by this certificate.

12 The marking of the product shall include the following:

Ex II (1)G [Ex ia Ga] IIC (-20°C ≤ Ta ≤ +60°C)

SGS Baseefa Customer Reference No. **0344** Project File No. **21/0147**

This document is issued by the Company subject to its General Conditions for Certification Services accessible at http://www.sgs.com/en/Terms-and-Conditions.aspx and the Supplementary Terms and Conditions accessible at http://www.sgs.com/SGSBaseefa/Terms-and-Conditions.aspx. Attention is drawn to the limitation of liability, indemnification and jurisdiction issues defined therein. Any holder of this document is advised that information contained herein reflects the Company's findings at the time of its intervention only and within the limits of Client's instructions, if any. It does not necessarily indicate that the equipment may be used in particular industries or circumstances. The Company's sole responsibility is to its Client and this document does not exonerate parties to a transaction from exercising all their rights and obligations under the transaction documents. This document cannot be reproduced except in full, schedule included, without prior written approval of the Company. Any unauthorized alteration, forgery or falsification of the content or appearance of this document is unlawful and offenders may be prosecuted to the fullest extent of the law.

SGS Baseefa Limited
Rockhead Business Park, Staden Lane,
Buxton, Derbyshire SK17 9RZ
Telephone +44 (0) 1298 766600 Fax +44 (0) 1298 766601
e-mail baseefa@sgs.com web site www.sgs.co.uk/sgsbaseefa
Registered in England No. 4305578.
Registered address: Rossmore Business Park, Ellesmere Port, Cheshire, CH65 3EN

UKAS PRODUCT CERTIFICATION 0191

R S SINCLAIR
TECHNICAL MANAGER
On behalf of SGS Baseefa Limited

13 **Schedule**

14 **Certificate Number BAS21UKEX0600**

15 Description of Product

A Gas Detector Type ED81* is a control unit designed to power and monitor up to 4 remote gas sensors (e.g. Type EDF Gas Sensor to Baseefa03ATEX0631X or IS Transmitter Type EDS/C(P) to BAS02ATEX1233) which can detect a wide range of flammable and toxic gases depending on the type of sensor used.

There are 2 control units:

- ED810- designed for 12v or 24v DC power supplies
- ED811 – designed for mains power supplies.

The control circuits is housed, together with up to 4 zener barriers Type ZB1 to BAS99ATEX7149U (which provide voltage and current limitations for up to 4 remote gas sensors) and terminals for the electrical connections, in a plastic or metal enclosure which provides a degree of protection of at least IP20.

Supply – Non-hazardous Are Terminals

U_m = 253V

Output Parameters (per Channel, 1-4)

U_o = 8.8V C_i = 0

I_o = 1.043A L_i = 0

P_o = 2W

The capacitance and either the inductance or the inductance to resistance ratio (L/R) of the load connection to each channel must not exceed the following values:

Group	Capacitance	Inductance or L/R Ratio	
	µF	mH	µH/Ω
IIC	6.8 (8.8)	30	14
IIB	24.4 (26.4)	90	42
IIA	68.4 (70.4)	240	112

Figures in the parentheses may be used when connected to Gas Sensor Type EDF.

16 Report Number

21(C)0147/02

17 Specific Conditions of Use

None

18 Essential Health and Safety Requirements

In addition to the Essential Health and Safety Requirements (EHSRs) covered by the standards listed at item 9, the following are considered relevant to this product, and conformity is demonstrated in the report:

Clause	Subject	Compliance
1.2.7	LVD type requirements	Manufacturer responsibility
1.4.1	External effects	User/Installer responsibility
1.4.2	Aggressive substances, etc.	User/Installer responsibility

19 Drawings and Documents

Number	Sheet	Issue	Date	Description
FPDGMV6	1 of 1	-	07/12/2021	ED810 Front Panel Label
FPDGMV4	1 of 1	-	07/12/2021	ED811 Front Panel Label

These drawings are held with BAS21UKEX0600.

For other current drawings not re-submitted for this assessment, see Baseefa03ATEX0507 Issue 3.

1 # EU - TYPE EXAMINATION CERTIFICATE

2 **Equipment or Protective System Intended for use in Potentially Explosive Atmospheres**
Directive 2014/34/EU

3 EU - Type Examination Certificate Number: **BAS99ATEX7149U – Issue 2**

3.1 In accordance with Article 41 of Directive 2014/34/EU, EC-Type Examination Certificates referring to 94/9/EC that were in existence prior to the date of application of 2014/34/EU (20 April 2016) may be referenced as if they were issued in accordance with Directive 2014/34/EU. Supplementary Certificates to such EC-Type Examination Certificates, and new issues of such certificates, may continue to bear the original certificate number issued prior to 20 April 2016.

4 Product: **Shunt Zener Diode Safety Barrier Modules Type ZB***

5 Manufacturer: **Electronic Devices Ltd**

6 Address: **Malvern, Worcestershire, WR14 1GB**

7 This re-issued certificate extends EC Type Examination Certificate No. **BAS99ATEX7149U** to apply to product designed and constructed in accordance with the specification set out in the Schedule of the said certificate but having any variations specified in the Schedule attached to this certificate and the documents therein referred to.

8 SGS Fimko Oy, Notified Body number 0598, in accordance with Article 17 of Directive 2014/34/EU of the European Parliament and of the Council, dated 26 February 2014, certifies that this product has been found to comply with the Essential Health and Safety Requirements relating to the design and construction of products intended for use in potentially explosive atmospheres given in Annex II to the Directive.

8.1 The original certificate was issued by The Electrical Equipment Certification Service (UK Notified Body 0600). It, and any supplements previously issued by SGS Baseefa Ltd (UK Notified Body 1180) have been transferred to the supervision of SGS Fimko Oy (EU Notified Body 0598). The original certificate number is retained.

The examination and test results are recorded in confidential Report No. **See Certificate History**

9 Compliance with the Essential Health and Safety Requirements has been assured by compliance with:

EN IEC 60079-0:2018 **EN 60079-11:2012**

except in respect of those requirements listed at item 18 of the Schedule.

10 If the sign "X" is placed after the certificate number, it indicates that the product is subject to the Specific Conditions of Use specified in the schedule to this certificate.

11 This EU - TYPE EXAMINATION CERTIFICATE relates only to the design and construction of the specified product. Further requirements of the Directive apply to the manufacturing process and supply of this product. These are not covered by this certificate.

12 The marking of the product shall include the following:

See Schedule

SGS Fimko Oy Customer Reference No. **0334** Project File No. **20/0453**

This document is issued by the Company subject to their General Conditions for Certification Services accessible at http://www.sgs.com/en/Terms-and-Conditions.aspx . Attention is drawn to the limitation of liability, indemnification and jurisdiction issues defined therein. Any holder of this document is advised that information contained herein reflects the Company's findings at the time of their intervention only and within the limits of Client's instructions, if any. It does not necessarily indicate that the equipment may be used in particular industries or circumstances. The Company's sole responsibility is to its Client and this document does not exonerate parties to a transaction from exercising all their rights and obligations under the transaction documents. This document cannot be reproduced except in full, schedule included, without prior written approval of the Company. Any unauthorized alteration, forgery or falsification of the content or appearance of this document is unlawful and offenders may be prosecuted to the fullest extent of the law.

SGS Fimko Oy
Takomotie 8
FI-00380 Helsinki, Finland
Telephone +358 (0)9 696 361
e-mail sgs.fimko@sgs.com
web site www.sgs.fi
Business ID 0978538-5 Member of the SGS Group (SGA SA)

Tuomas Hänninen
SGS Fimko Oy

13 **Schedule**

14 **Certificate Number BAS99ATEX7149U - Issue 2**

15 Description of Product

Shunt Zener Diode Safety Barriers Types ZB* are designed to restrict the transfer of energy from non-intrinsically safe circuits to intrinsically safe circuits by the limitation of voltage and current.

Each barrier consists of a network of fuses, zener diodes and resistors, all encapsulated in a plastic case and electrical connections made via an asymmetrical arrangement of connector pins (of which 4 are earth) which are designed for PCB mounting. With the exception of the connector pins, the case provides a degree of protection of a least IP20.

The series consist of a total of five double channel barrier modules and one single channel barrier module for Group IIC and one single channel barrier module for Group IIB, details of which are listed in the tables below:

Ⓔx II (1)G [Ex ia Ga] IIC (-20°C ≤ Ta ≤ +60°C) ZB1 – ZB6

Ⓔx II (1)G [Ex ia Ga] IIB (-20°C ≤ Ta ≤ +60°C) ZB8

Input Parameters

Ch.1+i/p, Ch2. +i/p, Ch1&2 -i/p;

U_m =253V

Output Parameters

Barrier	Description (Nominal)	Terminals	U_o (V)	I_a (mA)	P_o(mW)	Factory of Safety
ZB1	8V, 10R	Ch 1 o/p	7.88	830	1580	>5
	8V, 39R	Ch 2 o/p	7.88	213	420	>20
		Ch 1 + Ch2	7.88	1043	2000	4.8
ZB2	8V, 18R	Ch 1 o/p	7.88	460	700	>10
	8V, 18R	Ch 2 o/p	7.88	460	700	>10
		Ch 1 + Ch2	7.88	920	1400	>5
ZB3	20V, 150R	Ch 1 o/p	21V	147	770	2.7
	20V, 150R	Ch 2 o/p	21V	147	770	2.7
		Ch 1 + Ch2	Not Permitted			
ZB4	8V, 220R	Ch 1 o/p	7.88V	38	74	>100
	8V, 220R	Ch 2 o/p	7.88V	38	74	>100
		Ch 1 + Ch2	7.88V	76	148	>50
ZB5	8V, 1KR	Ch 1 o/p	7.88V	8.3	16	>100
ZB6	20V, 180R	Ch 1 o/p	21V	123	645	3.2
	20V, 180R	Ch 2 o/p	21V	123	645	3.2
		Ch 1 + Ch2	21V	246	1290	1.6
ZB8	15V, 22R	Ch 1 o/p	15.75	754	2.967	3.5

The above barriers may be positive of negative polarity but both channels must be of like polarity.

Load Parameters

The capacitance and either the inductance or the inductance to resistance (L/R) ratio of the hazardous area load must not exceed the following values for Group IIC:

Barrier	Terminals	Capacitance µF	Inductance or L/R Ratio mH	µH/Ω
ZB1	Ch 1	8.8	0.06	17
	Ch 2	8.8	0.06	17
	Ch 1 + Ch 2	8.8	0.03	14
ZB2	Ch 1	8.8	0.18	30
	Ch 2	8.8	0.18	30
	Ch 1 + Ch 2	8.8	0.04	15
ZB3	Ch 1	0.188	1.45	36
	Ch 2	0.188	1.45	36
	Ch 1 + Ch 2	Not Permitted		
ZB4	Ch 1	8.8	25	350
	Ch 2	8.8	25	350
	Ch 1 + Ch 2	8.8	6.42	181
ZB5	Ch 1	8.8	492	790
ZB6	Ch 1	0.188	2.47	56
	Ch 2	0.188	2.47	56
	Ch 1 + Ch 2	0.188	0.16	29

The values for Groups IIB and IIA are 3 and 8 times the values shown for Group IIC respectively.

The capacitance and either the inductance or the inductance to resistance (L/R) ratio of the hazardous area load must not exceed the following values for Group IIB:

Barrier	Terminals	Capacitance µF	Inductance or L/R Ratio mH	µH/Ω
ZB8	Ch 1	2.9	300	47.8

16 Report Number

See Certificate History

17 Specific Conditions of Use

1. The Shunt Zener Diode Safety Barrier Modules must be mounted with suitable connection facilities such that the external connectors are provided with a degree of protection of at least IP20.

18 Essential Health and Safety Requirements

In addition to the Essential Health and Safety Requirements (EHSRs) covered by the standards listed at item 9, the following are considered relevant to this product, and conformity is demonstrated in the report: 21(C)0453/01

Clause	Subject	Compliance
1.2.7	Protection against other hazards (LVD type requirements, etc.)	Manufacturer responsibility
1.4.1	External effects	User/Installer responsibility
1.4.2	Aggressive substances, etc.	User/Installer responsibility

19 Drawings and Documents

New drawings submitted for this issue of certificate:

Number	Sheet	Issue	Date	Description
ZB CL	1 of 1	4	16.08.21	ZB COMPONENT LIST
ZBL	1 of 1	4	24.08.21	ZB Label diagram

These drawings are common to BAS21UKEX0599U.

Current drawings which remain unaffected by this issue:

Number	Sheet	Issue	Date	Description
ZB8 CCT	1 of 1	1	09.03.09	Double Zener Barrier Type ZB8
ZB8LO	1 of 1	1	06.04.09	ZB8 PCB Layout
ZBGA	1 of 1	3	09.03.09	Zener Barrier Type ZB

All drawings are common to BAS21UKEX0599U and held with BAS99ATEX07149U.

20 Certificate History

Certificate No.	Date	Comments
BAS99ATEX07149U	27 April 2001	The release of the prime certificate. The associated test and assessment is documented in Test Report No. 98(CI)0660.
BAS99ATEX07149U /1	11 May 2009	To permit the addition of a Type ZB8 Zener Barrier for Group IIB to the range of Safety Barrier Modules. The associated test and assessment is documented in Test Report No. 09(CI)0211
BAS99ATEX07149U Issue 2	7 December 2021	To confirm that the design conforms to the requirements of EN IEC 60079-0:2018 and EN 60079-11:2012 including a change to the marking in line with the later standards. Additionally, to accept minor electrical changes not affecting the original assessment. The associated test and assessment is documented in Test Report No. 20(C)0453/01.
For drawings applicable to each issue, see original of that issue.		

1 # UK-TYPE EXAMINATION CERTIFICATE

2 **Equipment or Protective System Intended for use in Potentially Explosive Atmospheres**
UKSI 2016:1107 (as amended) – Schedule 3A, Part 1

3 UK-Type Examination Certificate Number: **BAS21UKEX0599U**

4 Product: **Shunt Zener Diode Safety Barrier Modules Type ZB***

5 Manufacturer: **Electronic Devices Ltd**

6 Address: **Malvern, Worcestershire, WR14 1GB**

7 This product and any acceptable variation thereto is specified in the schedule to this certificate and the documents therein referred to.

8 SGS Baseefa, Approved Body number 1180, in accordance with Regulation 43 of the Equipment and Protective Systems Intended for Use in Potentially Explosive Atmospheres Regulations 2016, UKSI 2016:1107 (as amended), certifies that this product has been found to comply with the Essential Health and Safety Requirements relating to the design and construction of products intended for use in potentially explosive atmospheres given in Schedule 1 of the Regulations.

The examination and test results are recorded in confidential Report No. **21(C)0147/01**

9 Compliance with the Essential Health and Safety Requirements has been assured by compliance with:

EN IEC 60079-0: 2018 EN 60079-11: 2012

except in respect of those requirements listed at item 18 of the Schedule.

10 If the sign "X" is placed after the certificate number, it indicates that the product is subject to the Specific Conditions of Use specified in the schedule to this certificate.

11 This UK-TYPE EXAMINATION CERTIFICATE relates only to the design and construction of the specified product. Further requirements of the Regulations apply to the manufacturing process and supply of this product. These are not covered by this certificate.

12 The marking of the product shall include the following:

See Schedule

SGS Baseefa Customer Reference No. **0344** Project File No. **21/0147**

This document is issued by the Company subject to its General Conditions for Certification Services accessible at http://www.sgs.com/en/Terms-and-Conditions.aspx and the Supplementary Terms and Conditions accessible at http://www.sgs.com/SGSBaseefa/Terms-and-Conditions.aspx. Attention is drawn to the limitation of liability, indemnification and jurisdiction issues defined therein. Any holder of this document is advised that information contained herein reflects the Company's findings at the time of its intervention only and within the limits of Client's instructions, if any. It does not necessarily indicate that the equipment may be used in particular industries or circumstances. The Company's sole responsibility is to its Client and this document does not exonerate parties to a transaction from exercising all their rights and obligations under the transaction documents. This document cannot be reproduced except in full, schedule included, without prior written approval of the Company. Any unauthorized alteration, forgery or falsification of the content or appearance of this document is unlawful and offenders may be prosecuted to the fullest extent of the law.

SGS Baseefa Limited
Rockhead Business Park, Staden Lane,
Buxton, Derbyshire SK17 9RZ
Telephone +44 (0) 1298 766600 Fax +44 (0) 1298 766601
e-mail baseefa@sgs.com web site www.sgs.co.uk/sgsbaseefa
Registered in England No. 4305578.
Registered address: Rossmore Business Park, Ellesmere Port, Cheshire, CH65 3EN

UKAS PRODUCT CERTIFICATION 0191

R S SINCLAIR
TECHNICAL MANAGER
On behalf of SGS Baseefa Limited

13 **Schedule**

14 **Certificate Number BAS21UKEX0559U**

15 Description of Product

Shunt Zener Diode Safety Barriers Types ZB* are designed to restrict the transfer of energy from non-intrinsically safe circuits to intrinsically safe circuits by the limitation of voltage and current.

Each barrier consists of a network of fuses, zener diodes and resistors, all encapsulated in a plastic case and electrical connections made via an asymmetrical arrangement of connector pins (of which 4 are earth) which are designed for PCB mounting. With the exception of the connector pins, the case provides a degree of protection of a least IP20.

The series consist of a total of five double channel barrier modules and one single channel barrier module for Group IIC and one single channel barrier module for Group IIB, details of which are listed in the tables below:

Ⓔx II (1)G [Ex ia Ga] IIC (-20°C ≤ Ta ≤ +60°C) ZB1 – ZB6

Ⓔx II (1)G [Ex ia Ga] IIB (-20°C ≤ Ta ≤ +60°C) ZB8

Input Parameters

Ch.1+i/p, Ch2. +i/p, Ch1&2 -i/p;

U_m =253V

Output Parameters

Barrier	Description (Nominal)	Terminals	U_o (V)	I_a (mA)	P_o(mW)	Factory of Safety
ZB1	8V, 10R	Ch 1 o/p	7.88	830	1580	>5
	8V, 39R	Ch 2 o/p	7.88	213	420	>20
		Ch 1 + Ch2	7.88	1043	2000	4.8
ZB2	8V, 18R	Ch 1 o/p	7.88	460	700	>10
	8V, 18R	Ch 2 o/p	7.88	460	700	>10
		Ch 1 + Ch2	7.88	920	1400	>5
ZB3	20V, 150R	Ch 1 o/p	21V	147	770	2.7
	20V, 150R	Ch 2 o/p	21V	147	770	2.7
		Ch 1 + Ch2	Not Permitted			
ZB4	8V, 220R	Ch 1 o/p	7.88V	38	74	>100
	8V, 220R	Ch 2 o/p	7.88V	38	74	>100
		Ch 1 + Ch2	7.88V	76	148	>50
ZB5	8V, 1KR	Ch 1 o/p	7.88V	8.3	16	>100
ZB6	20V, 180R	Ch 1 o/p	21V	123	645	3.2
	20V, 180R	Ch 2 o/p	21V	123	645	3.2
		Ch 1 + Ch2	21V	246	1290	1.6
ZB8	15V, 22R	Ch 1 o/p	15.75	754	2.967	3.5

The above barriers may be positive of negative polarity but both channels must be of like polarity.

Load Parameters

The capacitance and either the inductance or the inductance to resistance (L/R) ratio of the hazardous area load must not exceed the following values for Group IIC:

Barrier	Terminals	Capacitance µF	Inductance or L/R Ratio mH	µH/Ω
ZB1	Ch 1	8.8	0.06	17
	Ch 2	8.8	0.06	17
	Ch 1 + Ch 2	8.8	0.03	14
ZB2	Ch 1	8.8	0.18	30
	Ch 2	8.8	0.18	30
	Ch 1 + Ch 2	8.8	0.04	15
ZB3	Ch 1	0.188	1.45	36
	Ch 2	0.188	1.45	36
	Ch 1 + Ch 2	Not Permitted		
ZB4	Ch 1	8.8	25	350
	Ch 2	8.8	25	350
	Ch 1 + Ch 2	8.8	6.42	181
ZB5	Ch 1	8.8	492	790
ZB6	Ch 1	0.188	2.47	56
	Ch 2	0.188	2.47	56
	Ch 1 + Ch 2	0.188	0.16	29
The values for Groups IIB and IIA are 3 and 8 times the values shown for Group IIC respectively. The capacitance and either the inductance or the inductance to resistance (L/R) ratio of the hazardous area load must not exceed the following values for Group IIB:				
Barrier	**Terminals**	**Capacitance µF**	**Inductance or L/R Ratio mH**	**µH/Ω**
ZB8	Ch 1	2.9	300	47.8

16 Report Number

21(C)0147/01

17 Specific Conditions of Use

None

18 Essential Health and Safety Requirements

In addition to the Essential Health and Safety Requirements (EHSRs) covered by the standards listed at item 9, the following are considered relevant to this product, and conformity is demonstrated in the report:

Clause	Subject	Compliance
1.2.7	LVD type requirements	Manufacturer responsibility
1.4.1	External effects	User/Installer responsibility
1.4.2	Aggressive substances, etc.	User/Installer responsibility

19 Drawings and Documents

Number	Sheet	Issue	Date	Description
ZB CL	1 of 1	4	16.08.21	ZB COMPONENT LIST
ZBL	1 of 1	4	24.08.21	ZB Label diagram

These drawings are held with BAS21UKEX0599U.

For other current drawings not re-submitted for this assessment, see BAS99ATEX7149U - Issue 2