swisherinc.com

OWNER'S MANUAL

STARTING SERIAL #:
L116-182001

MODEL NO.

WBRC11524C

WBRC11524CXP

IMPORTANT

Read and follow all Safety Precautions and Instructions before operating this equipment.

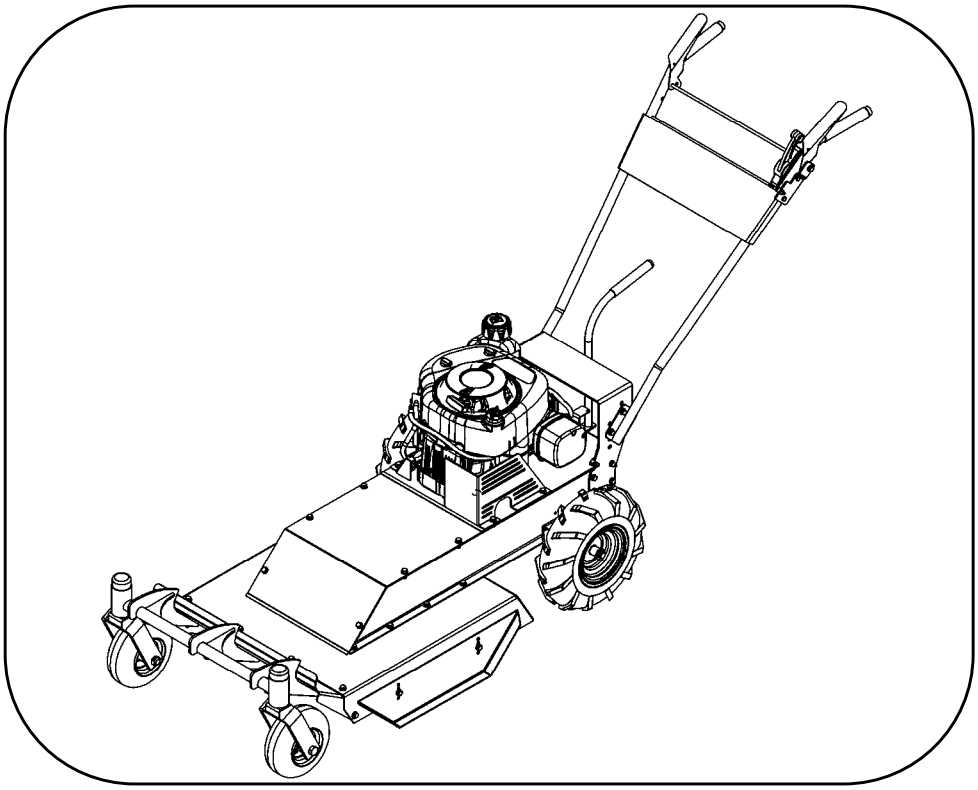

PREDATOR TALON

24" WALK BEHIND ROUGH CUT

Operation
Service and Adjustment
Repair Parts

SWISHER®

1602 CORPORATE DRIVE, WARRENSBURG MISSOURI 64093
PHONE (660) 747-8183 FAX (660) 747-8650

Made In The
USA
of US and Global Parts

19706 REV 16-182

LIMITED WARRANTY

The manufacturer's warranty to the original consumer purchaser is: This product is free from defects in materials and workmanship for a period of (1) year from the date of purchase by the original consumer purchaser. We will repair or replace, at our discretion, parts found to be defective due to materials or workmanship. This warranty is subject to the following limitations and exclusions:

1)	Engine Warranty	All engines utilized on our products have a separate warranty extended to them by the individual engine manufacturer. Any engine service difficulty is the responsibility of the engine manufacturer and in no way is Swisher or its agents responsible for the engine warranty. The Briggs & Stratton Engine Service Hot-Line is 1-800-233-3723.
2)	Commercial Use	This product is not intended for commercial use and carries no commercial warranty.
3)	Limitation	This warranty applies only to products which have been properly assembled, adjusted, and operated in accordance with the instructions contained within this manual. This warranty does not apply to any product of Swisher that has been subject to alteration, misuse, abuse, improper assembly or installation, shipping damage, or to normal wear of product.
4)	Exclusions	Excluded from this warranty are normal wear, normal adjustments, and normal maintenance.

In the event you have a claim under this warranty, you must return the product to an authorized service dealer. All transportation charges, damage, or loss incurred during transportation of parts submitted for replacement or repair under this warranty shall be borne by the purchaser. Should you have any questions concerning this warranty, please contact us toll-free at 1-800-222-8183. The model number, serial number, date of purchase, and the name of the authorized Swisher dealer from whom you purchased the mower will be needed before any warranty claim can be processed.
THIS WARRANTY DOES NOT APPLY TO ANY INCIDENTAL OR CONSEQUENTIAL DAMAGES AND ANY IMPLIED WARRANTIES ARE LIMITED TO THE SAME TIME PERIODS STATED HEREIN FOR ALL EXPRESSED WARRANTIES. Some states do not allow the limitation of consequential damages or limitations on how long an implied warranty may last, so the above limitations or exclusions may not apply to you. This warranty gives you specific legal rights and you may have other rights, which vary from state-to-state. This is a limited warranty as defined by the Magnuson-Moss Act of 1975.

TABLE OF CONTENTS

WARRANTY……...….2
INTRODUCTION……..3
SAFETY..…….3-4
PRE-OPERATING..…..……..……4
OPERATION.…….5-7
DECALS…..…….……8
PARTS BREAKDOWN…….9-13
MAINTENANCE LOG..……..…15

Thank you for choosing Swisher's 24" Walk Behind Rough Cut. Before operating your Walk Behind, please read, understand and follow all of the safety precautions and other instructions explained in this manual. As with all power equipment, lawn mowers can be potentially dangerous if not properly used.

SAFETY PRECAUTIONS



This Safety Alert Symbol indicates important messages in this manual. When you see this symbol, carefully read the message that follows and be alert to the possibility of personal injury.

Read this manual completely. This machine can amputate hands and feet, and throw objects. Failure to observe the following safety instructions could result in serious injury or death.

- Read the manual. Learn to operate this machine safely.
- Always disconnect the spark plug wire and place the wire where it cannot contact the spark plug, to prevent accidental starting the engine when setting up, transporting, adjusting or making repairs.
- Keep all shields and guards in place.
- Understand the speed, steering and stability of this machine. Know the positions and operations of all controls before you operate this machine. Check all of the controls in a safe area before starting to work with this machine.
- Allow only responsible adults who are familiar with these instructions to operate this machine. **Never allow children to operate this machine.**
- Clear the area of objects such as rocks, toys, wire, etc. that can be picked up and thrown by the blade.
- Be sure the area is clear of other people before mowing. Be aware of the mower discharge direction and do not point at anyone. **Stop the machine** if anyone enters the mowing area. Children are often attracted to the machine and the mowing activity. ***Never assume that children will remain where you last saw them*.** Keep children under the watchful care of another responsible adult.
- **No riders!**
- Do not put hands or feet near or under rotating parts.
- Do not mow in reverse. **Always look down and behind before and during backing.**

- Turn off the blade when not mowing. Before leaving the machine, turn off the blade and stop the engine.
- Watch for traffic when operating near or crossing roadways.
- Do not operate the mower if it has been dropped or damaged in any manner or if the mower vibrates excessively. Excessive vibration is an indication of damage. Repair mower as necessary.
- Dress properly. Do not operate the mower when barefoot or wearing open sandals. Wear only solid shoes with good traction when mowing.
- Never allow operation by untrained persons.
- Do not operate the machine while under the influence of alcohol or drugs.
- Do not operate on slopes greater than 15 degrees.
- Never tamper with safety devices. Check their proper operation regularly.
- Stop and inspect the equipment if you strike an object. Repair, if necessary, before restarting. Never make adjustments or repairs with the engine running.
- Mower blades are sharp and can cut. Wrap the blades or wear gloves, and use extra caution when servicing them.
- Do not operate at too fast a rate.

PRE-OPERATING INSTRUCTIONS

- Disengage spark plug wire and place where it cannot make a connection.
- Check engine oil. All engines are filled with oil at the factory. Verify oil level and add if necessary before starting engine (See Engine Owner's Manual).
- Verify fuel level and add if necessary before starting engine.
- Reconnect spark plug wire.
- Refer to pages 5-7 in this manual for proper operating procedures.



OPERATING YOUR NEW WALK BEHIND



The operation of any mower can produce foreign objects to be thrown into the eyes, resulting in severe eye damage. Always wear certified safety glasses or wide-vision safety goggles over spectacles before starting any cutting machine and while operating such a machine.



The operation of any mower produces sound waves that are damaging to the human ear. Ear protection is recommended.



CAUTION!
Tragic accidents can occur if the operator is not alert to the presence of children. Children are often attracted to the machine and the mowing activity. ***Never assume that children will remain where you last saw them.***

INTENDED USE

This is not a lawn mower. The Predator Talon is designed for cutting overgrown brush, weeds, and other types of organic growth. This unit is capable of clearing small saplings of 1.5" in diameter or less at a height of approximately 4".

PROPULSION

The Predator Talon is self-propelled and is controlled by a "GROUND CONTROL" lever. To engage the drive, put the transaxle in a gear and activate the left lever. Releasing the lever will disengage the self-propel.
Under most conditions cutting should be done in a low gear (1st or 2nd). Upper gears should be used for conditions where weeds and brush are thinned out or not as tall. In confined areas the machine can be pushed forwards or backwards by releasing the "GROUND CONTROL" lever, placing the transaxle in neutral, and pushing the machine.

TRAVEL SPEED

Speed can be varied by choosing a higher or lower gear using the gearshift lever at the rear of the machine or by changing the engine speed with the engine throttle. Do not adjust speed with the blade engaged. To shift the cutter into reverse, release "GROUND CONTROL" lever, disengage blade, and rotate the shift lever to the left. When the lever stops, lift up the reverse lockout latch and continue to move the shift lever to the left until it stops again.

ENGAGING BLADE

An "OPERATOR PRESENCE" lever and a "BLADE ENGAGE DRIVE" control work together to engage the blade. Both devices must be activated before the blade will work. Releasing the "OPERATOR PRESENCE" lever will disengage both the blade and the "BLADE ENGAGE DRIVE" control.

STARTING THE ENGINE

See engine manufacturer's recommendations for the type and amount of oil and fuel used. Engine must be level to accurately check and fill oil. Do not overfill.

- Make sure unit is level, blade is disengaged, and transaxle in "NEUTRAL"
- Check spark plug wire, oil level, and fuel level.
- Check all electrical connections for build-up of debris.
- If needed set "CHOKE" to choke position.
- Flip the engine control switch to "ON" position.
- Set engine throttle control to ½ throttle position.
- Pull rope with a single fluid motion.
- After engine has started set "CHOKE" to "RUN" position.

IMPORTANT: This engine is not equipped with a spark arrester muffler. It is a violation of California Public Resource Code Section 4442 to use or operate the engine on any forest-covered, brush-covered, or grass-covered land. Other states or federal areas may have similar laws.

STOPPING

- Bring the Walk Behind to a complete stop by releasing the "GROUND CONTROL" lever (left).
- Disengage mower blade by releasing the "BLADE ENGAGE DRIVE" control (right).
- Reduce engine idle speed, and allow engine to run momentarily for cooling.
- Place transaxle in the "NEUTRAL" position.
- Flip the engine control switch to "OFF" position.

BREAKING IN YOUR WALK BEHIND

- Start engine properly.
- Slowly engage blade control.
- Under supervision, allow blade to rotate and engine to idle for 5 minutes.
- Disengage blade.
- Shift through each gear. While in each gear engage the "GROUND CONTROL" lever and travel 20 yards to ensure transaxle works properly.

BEGIN CUTTING

- Make sure area is clear of all bystanders.
- Make sure that all guards, belt guides, and the spark plug wire are properly attached.
- Start engine, set engine throttle control at maximum engine idle speed for best results.
- Allow engine to run a few moments and slowly engage blade.
- Move transaxle into low gear and activate "GROUND CONTROL" lever.
- Turning is done by rotating the handles left or right. This machine has significant weight and may take more effort to turn than one may expect. Turning could take practice.

BACKING UP

- Disengage blade.
- Check behind you for safety.
- Move transaxle into "REVERSE" position.
- Activate "GROUND CONTROL" lever.

TRANSPORTING

- Shut off engine.
- Secure in place while unit is being transported.
- Unit should be left in low gear to avoid any slight rolling.

SUGGESTED PRACTICES

- Always operate engine at full throttle when cutting to assure the best cutting performance and proper discharge of material.
- If grass is wet, allow it to dry. Wet grass clumps will collect on the bottom of the deck.
- Go slow when cutting dense areas. Some dense areas may need to be gone over twice. Better results occur if the second cut is 90 degrees to the first cut.

BEFORE EACH SEASON

A new spark plug and clean air filter assure proper air-fuel mixture and help your engine run better and last longer.

- Replace the spark plug.
- Clean or replace the air filter.
- Check blades and belts for wear.

BEFORE EACH USE

- Check engine oil level. Do this twice to ensure an accurate reading.
- Check condition of air filter and clean or replace if necessary.
- Check blade operation.
- Check for loose fasteners.
- Check tires for proper inflation. See tires for maximum inflation.
  - Rear tire valve stems are located on the inside of the wheel rim.
  - Front tire valve stems should be turned to avoid contact with caster yoke.

DAILY MAINTENANCE

Make sure all nuts and bolts are tight and cotter pins and retainer springs are secure.
Keep blades sharp. Observe all safety precautions.

BLADE CARE AND SERVICE

For best results blades must be kept sharp. The blades can be sharpened with a few strokes of a file or grinding wheel. Do Not attempt to sharpen blades while they are on the machine.

Important: Replace blades that have been damaged or deeply nicked.

Important: Check blade and spindle hardware on a regular basis to make sure nuts are tight.

SAFETY AND OPERATIONAL DECALS

Replace decal immediately if damaged. Order by part number from Swisher.



OD55--DANGER DECAL



OD45--WARNING DECAL



OD83--RN1234 SHIFT DECAL



10749--REVERSE LOCK DECAL



19976--SWISHER FLAG DECAL



OD99112--LARGE LOGO WHITE DECAL
OD99156--SMALL LOGO WHITE DECAL

DECALS NOT SHOWN

19722-- Predator Talon LH Decal

19732-- Predator Talon RH Decal

OD87--Rugged Cut 24 4SP Trans White Decal

ASSEMBLY DETAIL

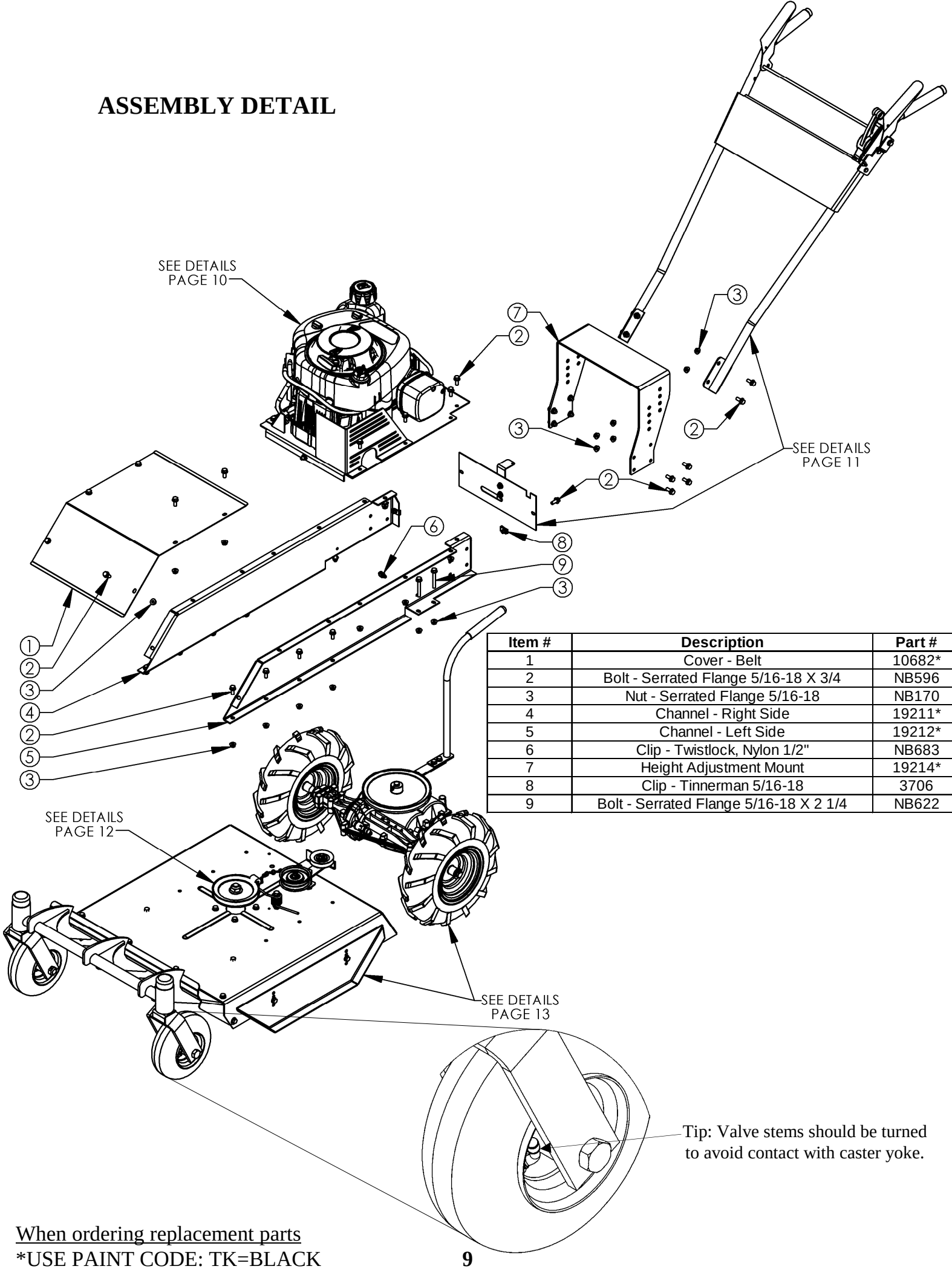

Item #	Description	Part #
1	Cover - Belt	10682*
2	Bolt - Serrated Flange 5/16-18 X 3/4	NB596
3	Nut - Serrated Flange 5/16-18	NB170
4	Channel - Right Side	19211*
5	Channel - Left Side	19212*
6	Clip - Twistlock, Nylon 1/2"	NB683
7	Height Adjustment Mount	19214*
8	Clip - Tinnerman 5/16-18	3706
9	Bolt - Serrated Flange 5/16-18 X 2 1/4	NB622

When ordering replacement parts
*USE PAINT CODE: TK=BLACK

ENGINE & PULLEY ASSEMBLY

Item #	Description	Part #
1	5/16-18 X 1 1/4 Serr. Flange Bolt	NB253
2	5/16-18 X 3/4 Serr. Flange Bolt	NB596
3	Bracket - ON/OFF Switch, Txt Blk	19201*
4	Switch - Toggle	19192
5	5/16-18 Serr. Flange Nut	NB170
6	Belt Retention Weldment	10767
7	Engine Pulley Spacer 1.75" Long	BB105S
8	1/4 X 1/2 Key Stock	4258
9	Engine Pulley- 2.5"	2411
10	Engine Pulley- 4.25"OD,1 1/4 ID	BB105
11	Washer Belleville	699
12	Bolt - Serr Flange, 5/16-18 X 1 3/4 Gr5	NB515
13	3/8-16 2 Way Locking Nut	NB280
14	Idler Pulley OD-2.16", ID-3/8"	B27
15	Transmission Belt-35"	690
16	1 X 1 1/2 10GA Washer	NB614HT
17	1/4 X 1 Key Stock	9031
18	Washer, Front Wheel	TR150W
19	7/16-20 X 1 1/2 HCF GR5 ZP Nyloc	NB637
20	Engine B&S Recoil St W/Gas Tank	N/A
21	Nut - Nyloc 5/16-18 ZY	NB181
22	Valve - Oil Drain	16000
23	Guard - Wire	19478*
24	1/4-20 Serr. Flange Nut	NB524
25	Motor Plate	19213*
26	3/8 SAE Washer	NB272
27	3/8-16 X 1 1/2 HCCG	NB107
28	Spring	T2SM
29	1/4-20 X 3/4 GR5 ZP Bolt	NB250
30	Idler Arm	10671*
31	Idler Bushing	6037
32	3/8-16 X 1 GR5 ZP Bolt	NB604
Not Shown	Transmission Cable	19209

Install Transmission Cable (Not Shown) in Idler Arm before installing Idler Arm to Motor Plate.

<u>Important:</u> Spring must be hooked in Idler Arm as shown.

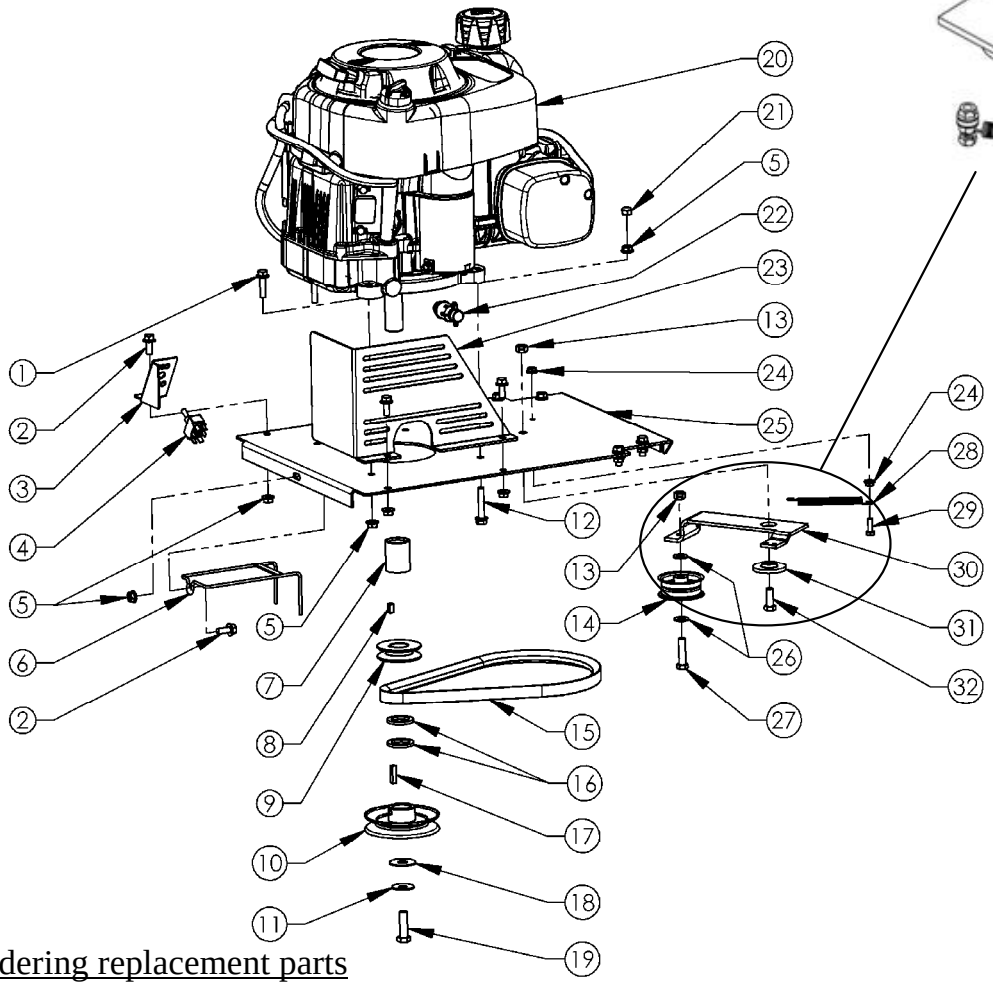

<u>When ordering replacement parts</u>

*USE PAINT CODE: TK=BLACK

REAR COVER ASSEMBLY

Item #	Description	Part #
1	5/16-18 Serr. Flange Nut	NB170
2	Rear Cover	10679*
3	Anti Reverse Arm	10680*
4	Spacer	B99S
5	5/16-18 X 3/4 Serr. Flange Bolt	NB596

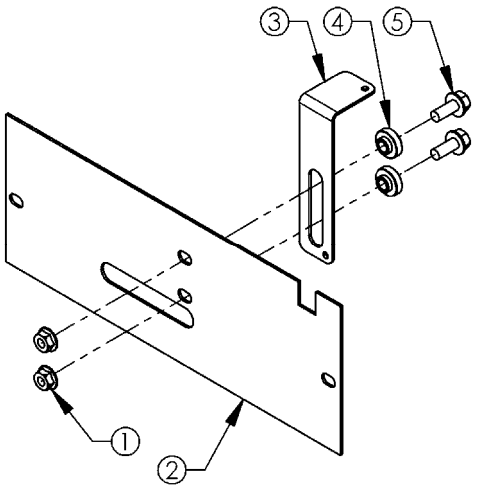

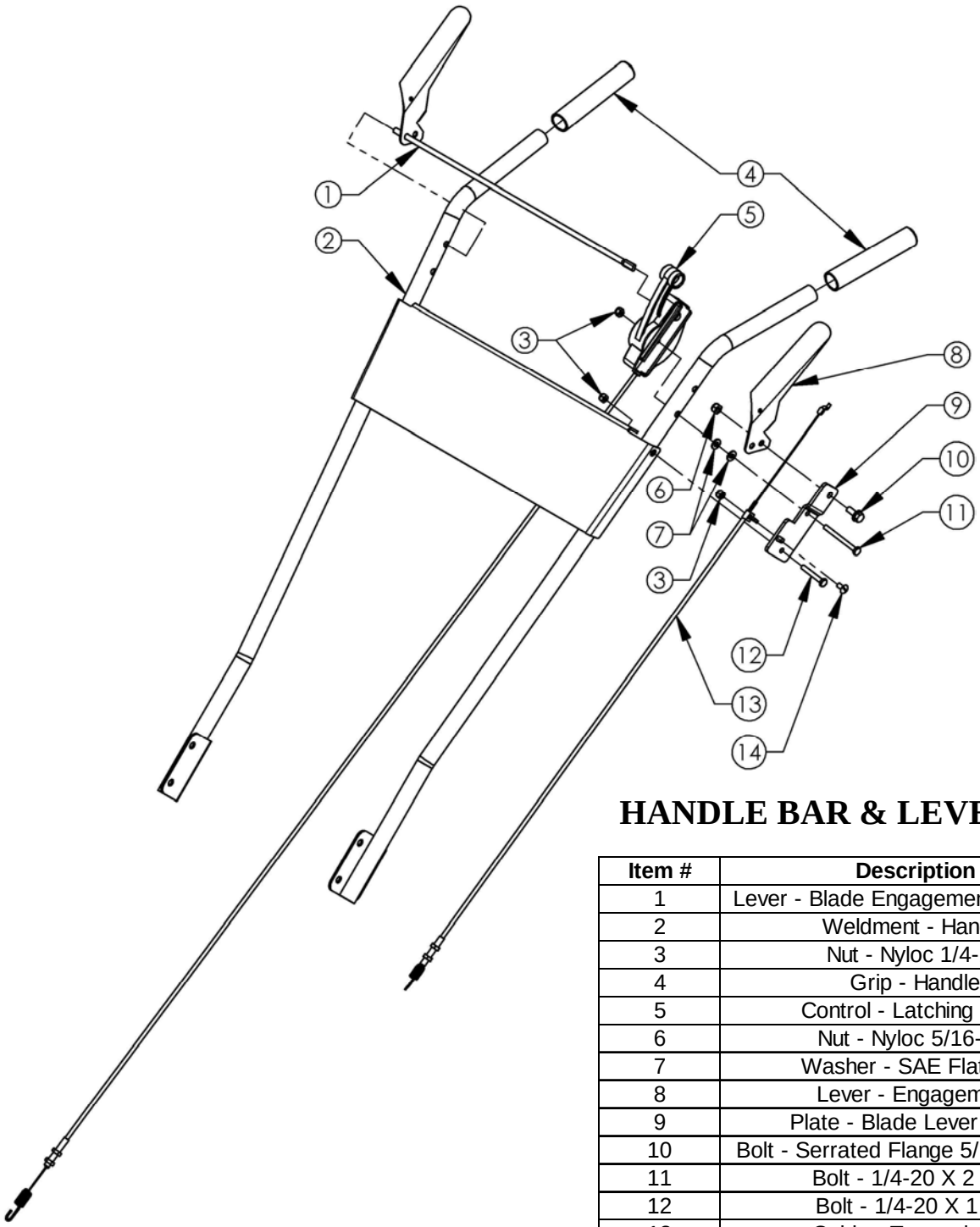

HANDLE BAR & LEVER ASSEMBLY

Item #	Description	Part #
1	Lever - Blade Engagement Weldment	19444*
2	Weldment - Handle	19220*
3	Nut - Nyloc 1/4-20	NB180
4	Grip - Handle	7826
5	Control - Latching Drive	19208
6	Nut - Nyloc 5/16-18	NB181
7	Washer - SAE Flat 1/4	NB274
8	Lever - Engagement	10685*
9	Plate - Blade Lever Cable	10713*
10	Bolt - Serrated Flange 5/16-18 X 3/4	NB596
11	Bolt - 1/4-20 X 2 3/4	19455
12	Bolt - 1/4-20 X 1 3/4	NB278
13	Cable - Transmission	19209
14	Bolt - MSC 1/4-20 X 1/2	NB113

When ordering replacement parts
*USE PAINT CODE: TK=BLACK

BLADE DRIVER ASSEMBLY

Item #	Description	Part #
1	3/4-16 Jam Nut	NB175
2	1.5x.761x.098x.134 Belleville Washer	AS155
3	Blade Pulley-5.5"	6114
4	Spacer - 3/4 ID x 1 Powder Metal	12823
5	3/4 ID X 1 1/4 OD 18 GA Washer	NB179
6	Blade Bearing	B98
7	Blade Shaft 6"- Long Shoulder	9078
8	5/16-18 Serr. Flange Nut	NB170
9	Blade Bearing Housing	9091*
10	5/16-18 X 3/4 Serr. Flange Bolt	NB596
11	3/4 ID X 1 3/4 OD Flat Washer	B98W
12	3/8-24 Two Way Locknut	NB216
13	Blade Mount Plate	9008
14	Blade 24"	9016
15	3/8-24 X 1 Bolt	NB238
16	SP Washer Bellvl. PLN .413 X .945 X .118	NB607
17	3/8-24 X 1 Engine Bolt Locktite	NB238N
18	Blade Driver Assembly	10712

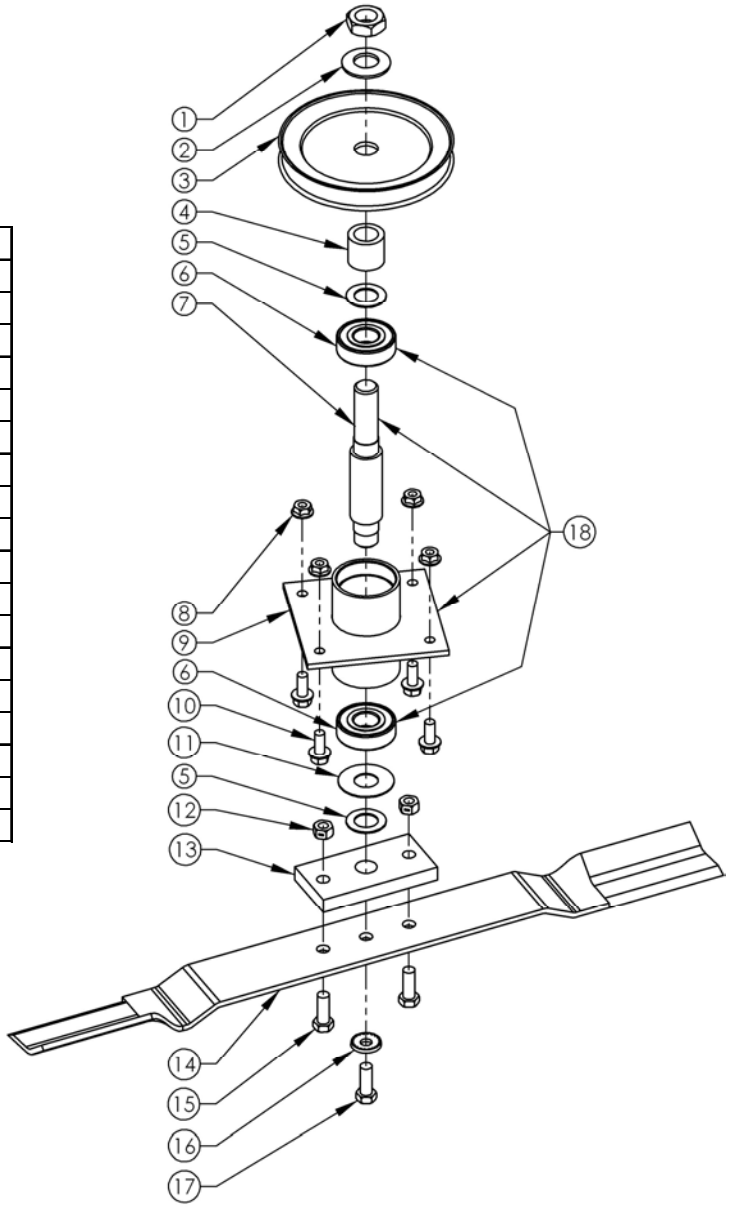

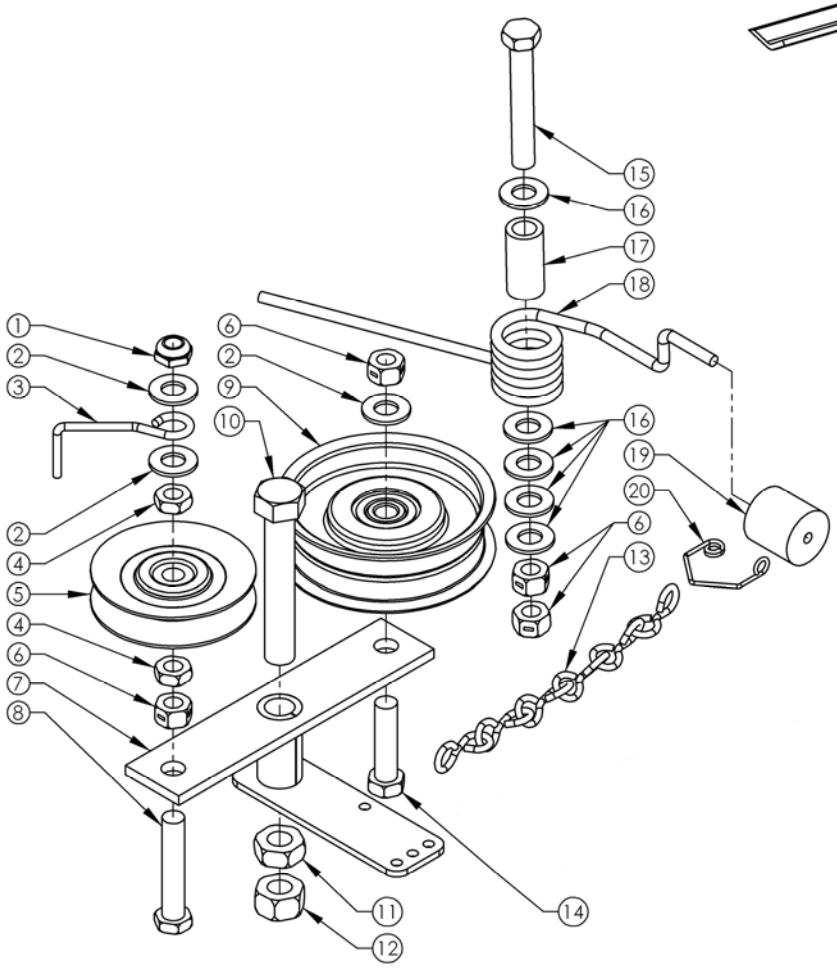

BRAKE ASSEMBLY

Item #	Description	Part #
1	Nut - Jam, Nyloc 3/8-16	NB207
2	3/8 SAE Washer	NB272
3	Finger for Belt Release	T30F
4	3/8-16 Jam Nut	NB174
5	Pulley, Idler Clutch, 2 3/4 OD	T30V
6	3/8-16 2-Way Lock Nut	NB280
7	Blade Idler Weldment	10668*
8	Bolt - HTC, 3/8-16 X 2	NB231
9	Idler Pulley OD-3.25", ID-3/8"	B527
10	1/2-13 X 3 HCC GR5 Bolt ZP	NB131
11	1/2-13 2-Way Jam Lock Nut	NB121
12	1/2-13 Nut GR2 ZP	NB213Z
13	Sgl Jk Chn, Zps, Sz12, 16#	AS080
14	Bolt - 3/8-16 X 1 1/2	NB107
15	3/8-16 X 2 1/2 HTC GR5 ZP	NB619
16	3/8 Hardened Washer	NB196
17	Spacer .625 OD X 1.25 X 11 GA	8072*
18	Torsion Brake Spring	BT297
19	Brake Pad-Cylindrical	9114
20	Brake Pad Retainer Spring	BP370S

When ordering replacement parts

*USE PAINT CODE: TK=BLACK

DECK & CASTER ASSEMBLY

Item #	Description	Part #
1	Deck Weldment	10695*
2	1/4-20 X 3/4 GR5 ZP Bolt	NB250
3	Blade Engagement Cable Clip	10673*
4	1/4-20 Nyloc Nut	NB180
5	Nut - Serrated Flange 5/16-18	NB170
6	Deck Side Skid	18512*
7	Bolt - Serrated Flange, 5/16-18 X 3/4	NB596
8	Washer - 5/8 ID X 1 OD 14 GA	NB149
9	Tire/Wheel - 8 X 3	19641
10	Nut - Lock Jam, 5/8-11 2 Way	NB595
11	Bolt - 5/8-11 X 5	19642
12	Weldment - Caster, Txt Blk	19638*
13	Washer - 13/16 X 1 1/4 X 1/8	NB195
14	Bearing	B98
15	Weldment - Brush Guard Housing	19631*
16	Washer - Flat	17X195
17	Nut - Jam, Nyloc 3/4-16	NB122
18	Cap	094618

PAGE 12

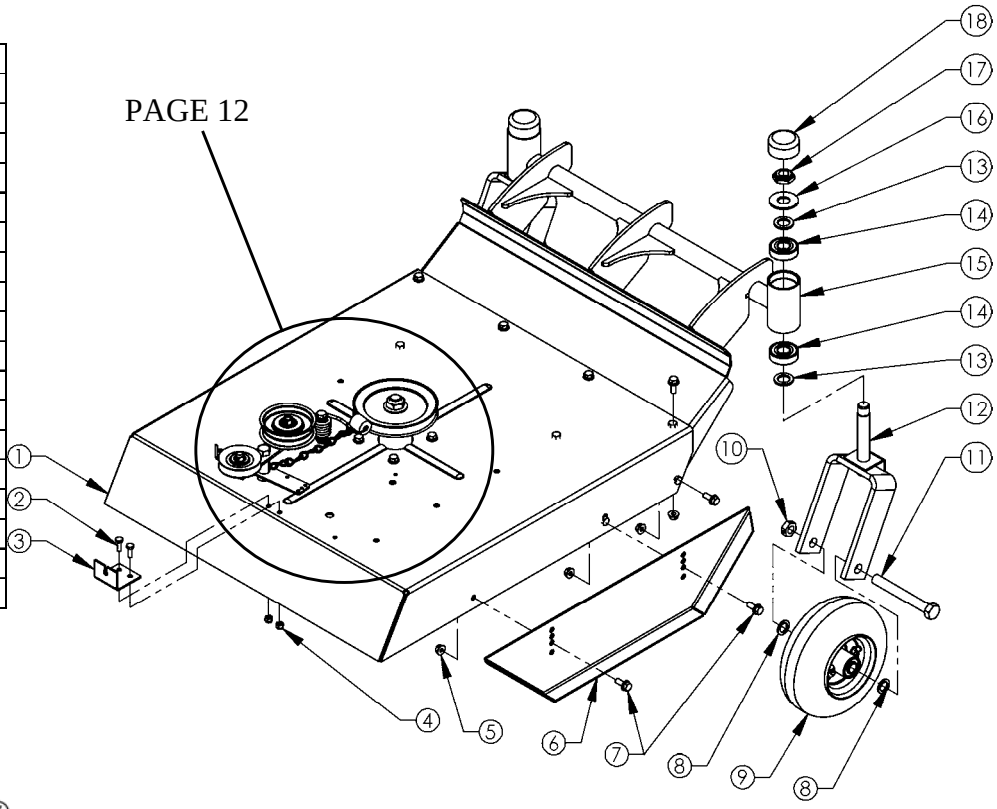

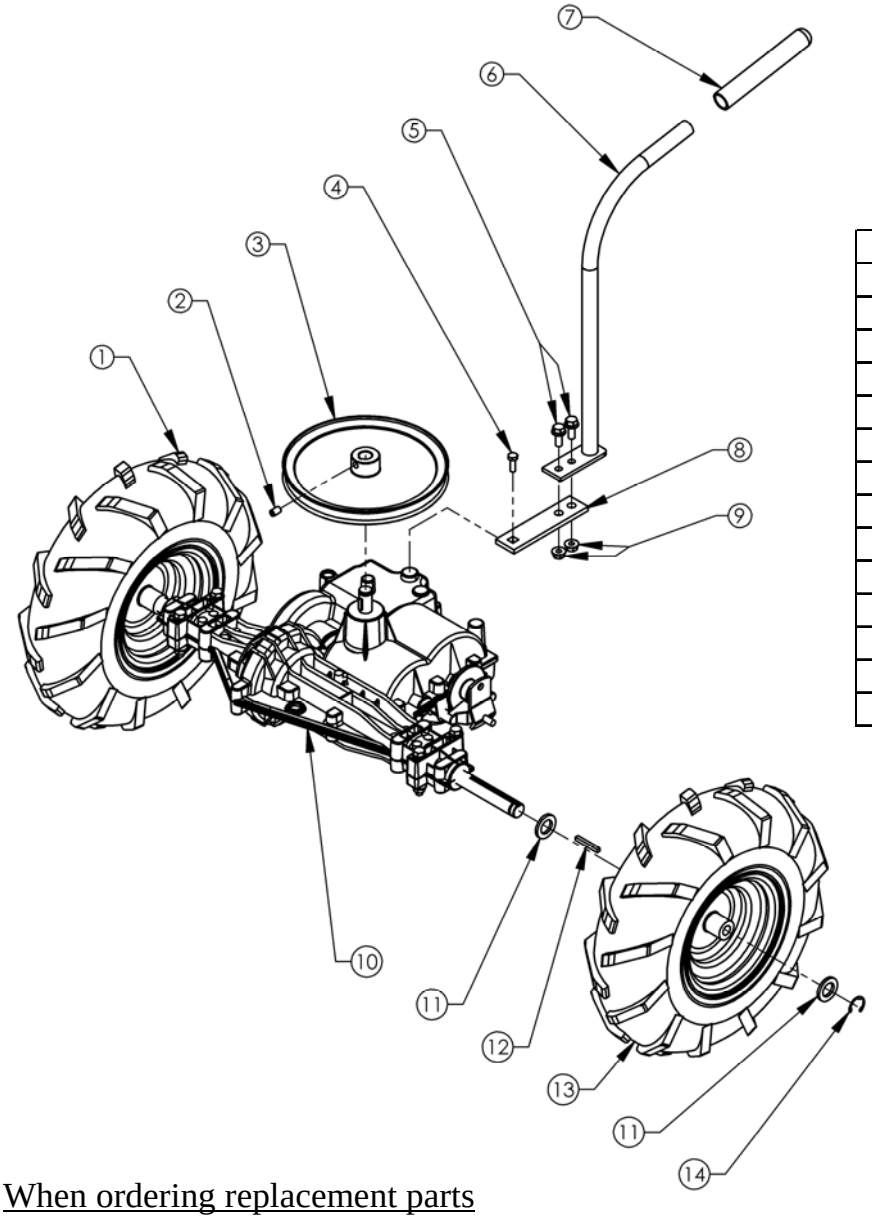

TRANSAXLE ASSEMBLY

Item #	Description	Part #
1	Wheel - Asy Right; WB24 4.8x8	2401RK
2	Screw - Set 5/16-18 X 1/2	NB312
3	Pulley - Transmission, 8"	2410
4	Bolt - Loctite Cap 1/4-28 X 3/4	06X105
5	Bolt - Serr Flange, 5/16-18 X 3/4	NB596
6	Weldment - Shift Handle	13897*
7	Grip - Transmission Lever	2427
8	Lever - Transmission	20652*
9	Nut - Serr Flange 5/16-18	NB170
10	Transaxle - 4 Speed	19563
11	Washer - 3/4ID X 1 1/4OD	NB184
12	Key Stock - 3/16 X 1 1/2	2434
13	Wheel - Asy Left; WB24 4.8x8	2401LK
14	Ring - E-Style Retaining 3/4	NB621

When ordering replacement parts

*USE PAINT CODE: TK=BLACK

WIRING CONFIGURATION

Wiring Harness PN 19202

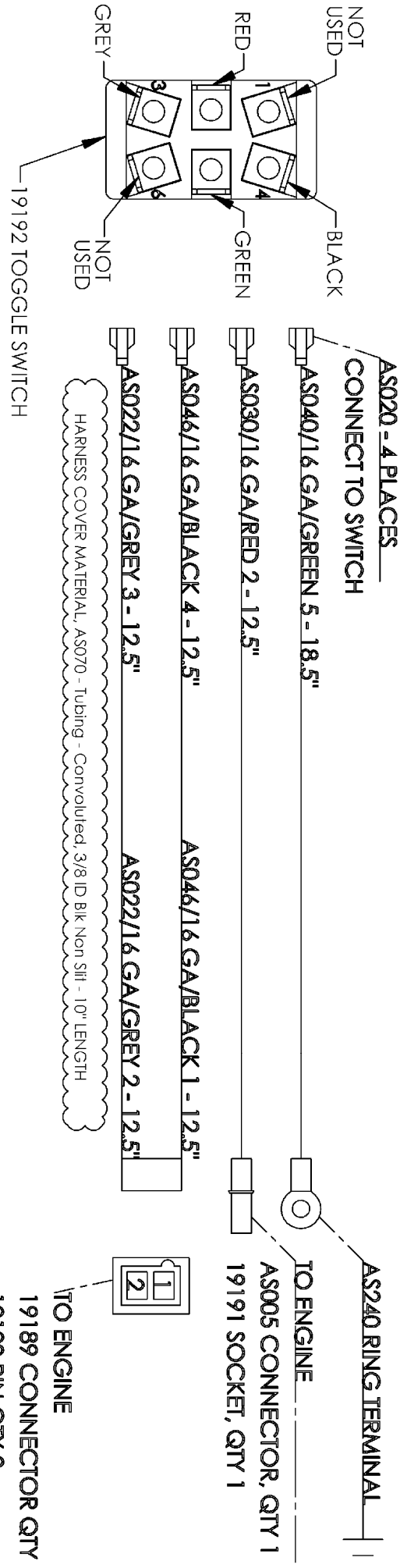

BELT CONFIGURATION

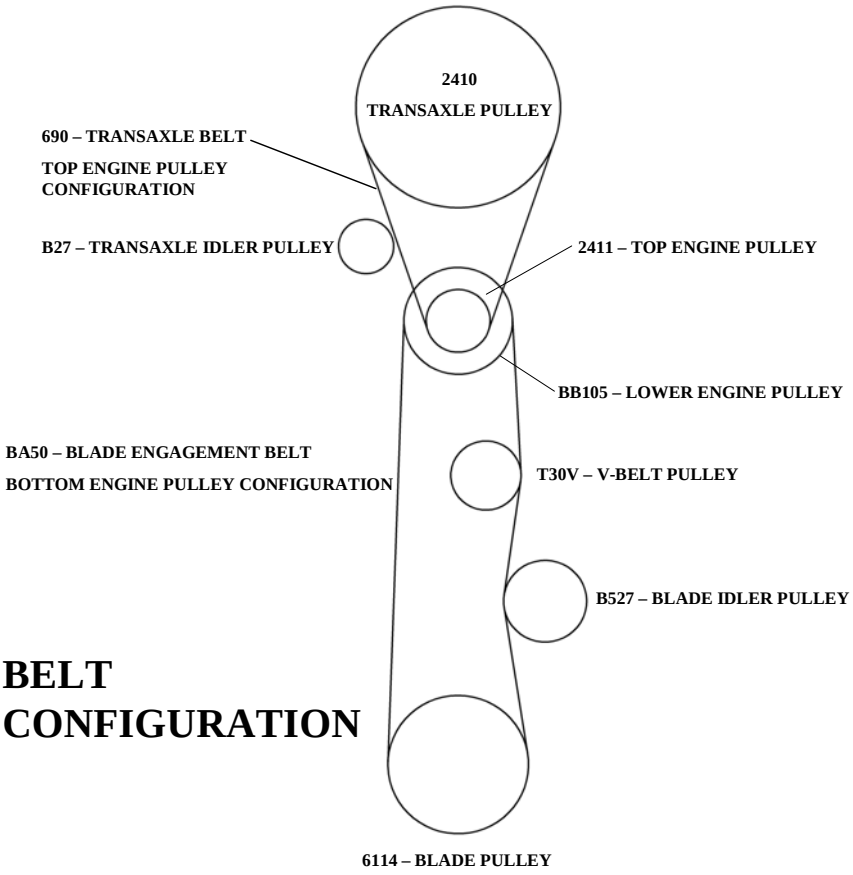

MAINTENANCE LOG

Date of Service	Service Performed		Notes

swisherinc.com

OWNER'S MANUAL

MODEL NO.

WBRC11524C

WBRC11524CXP

IMPORTANT

Read and follow all Safety Precautions and Instructions before operating this equipment.

PREDATOR TALON

24" WALK BEHIND ROUGH CUT

Each cutter has its own model number. Each engine has its own model number. The model number for the cutter will be found on the right hand side of the drive belt housing. The model number for the engine will be found on the top of the valve cover.
All cutter parts listed herein may be ordered directly from Swisher or your nearest Swisher dealer.
All engine parts may be ordered from the nearest dealer of the engine supplied with your cutter.

WHEN ORDERING PARTS, PLEASE HAVE THE FOLLOWING INFORMATION AVAILABLE:

* PRODUCT – WALK BEHIND ROUGH CUT
* SERIAL NUMBER - _____
* MODEL NUMBER - _____
* ENGINE MODEL NUMBER - _____
  TYPE - _____
* PART NUMBER
* PART DESCRIPTION

TELEPHONE - 1-800-222-8183
FAX - 1-660-747-8650

SWISHER
1602 CORPORATE DRIVE
WARRENSBURG, MO 64093

SWISHER®

CHANGING YOUR LANDSCAPE SINCE 1945