Inside The GT Actuator

Every Rotork actuator is built to provide long and efficient service with minimum maintenance. The design, engineering and materials used in their construction ensure optimum performance even in the harshest of environments.

Supply	Filtered air PNEUROP/ISO class 4	
Optional:	Others on request	
Operating Pressure	2 to 10 bar	(30 to 145 psi)
Torque Output	2.4 to 15,300 Nm	(21 to 135,400 lbf.in)

Temperature Ranges

Standard:	-50 to +70 °C NBR o-ring, Delrin guide	(-58 to +158 °F)
Optional:	-15 to +160 °C Viton o-ring, IXEF guide	(+5 to +320 °F)
Optional:	-60 to +200 °C Silicone o-ring, PTFE guide	(-76 to +392 °F)

Mounting Standards

Air supply:	VDI/VDE 3845, NAMUR EN ISO 228 G 1/8" (sizes from 33 to 92) EN ISO 228 G 1/4" (sizes from 110 to 302)
Accessories:	VDI/ VDE 3845, NAMUR
Valve interface:	ISO 5211, DIN 3337
Valve shaft interface:	ISO 5211 double square *Other interface options available, see page 9.*
Rotation	90°
Optional:	120°, 180°, 240°, or custom angles
Stroke Adjustment	-5° to +5° from 90° position Single- or dual-direction travel stops acting upon the piston(s)[1]
Optional:	Extended travel adjustment on the opening stroke is available with installation of a longer stop screw

Materials

Body:	Anodised aluminium ASTM 6063
Optional:	Stainless steel AISI 316 (limited sizes) or epoxy paint
Pinion:	Carbon steel EN 11SMNPB37 electroless nickel plated
Optional:	Stainless steel AISI 316
Pistons:	Die-cast aluminium UNI EN1706
End caps:	Die-cast aluminium UNI EN1706, EN AC- 46100, epoxy paint (black RAL 9005)
Spring cartridge:	Carbon steel, epoxy paint

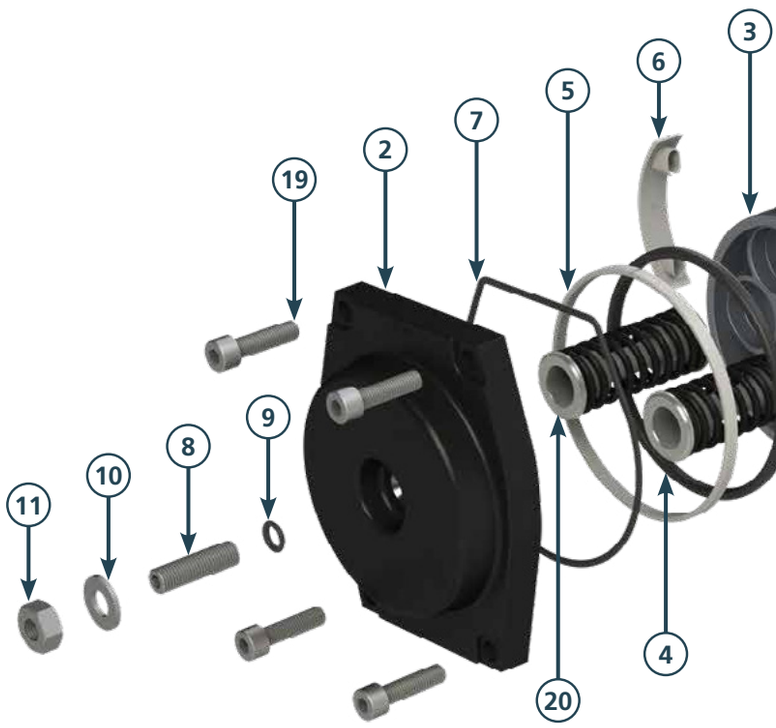

Optional Surface Treatments

- Anodised body, blue epoxy-painted end caps (RAL 5015)
- Hard anodised body, blue epoxy-painted end caps (RAL 9015)
- Hard anodised body, black epoxy-painted end caps (RAL 9005)
- Hard anodised body, end caps, and pistons
- Duraflon PTFE over anodised or hard-anodised body
- Polyester powder coat over anodised body
- FDA compliant epoxy polyester paint over anodised body
- Polyurethane Resin ISO 12944-6 over anodised body
- Plastcoat PPA571 ISO 12944-6 body and end caps

Contact Rotork with other requirements.

Polígono Industrial O Rebullón s/n. 36416 - Mos - España - rodavigo@rodavigo.com

Inside The GT Actuator

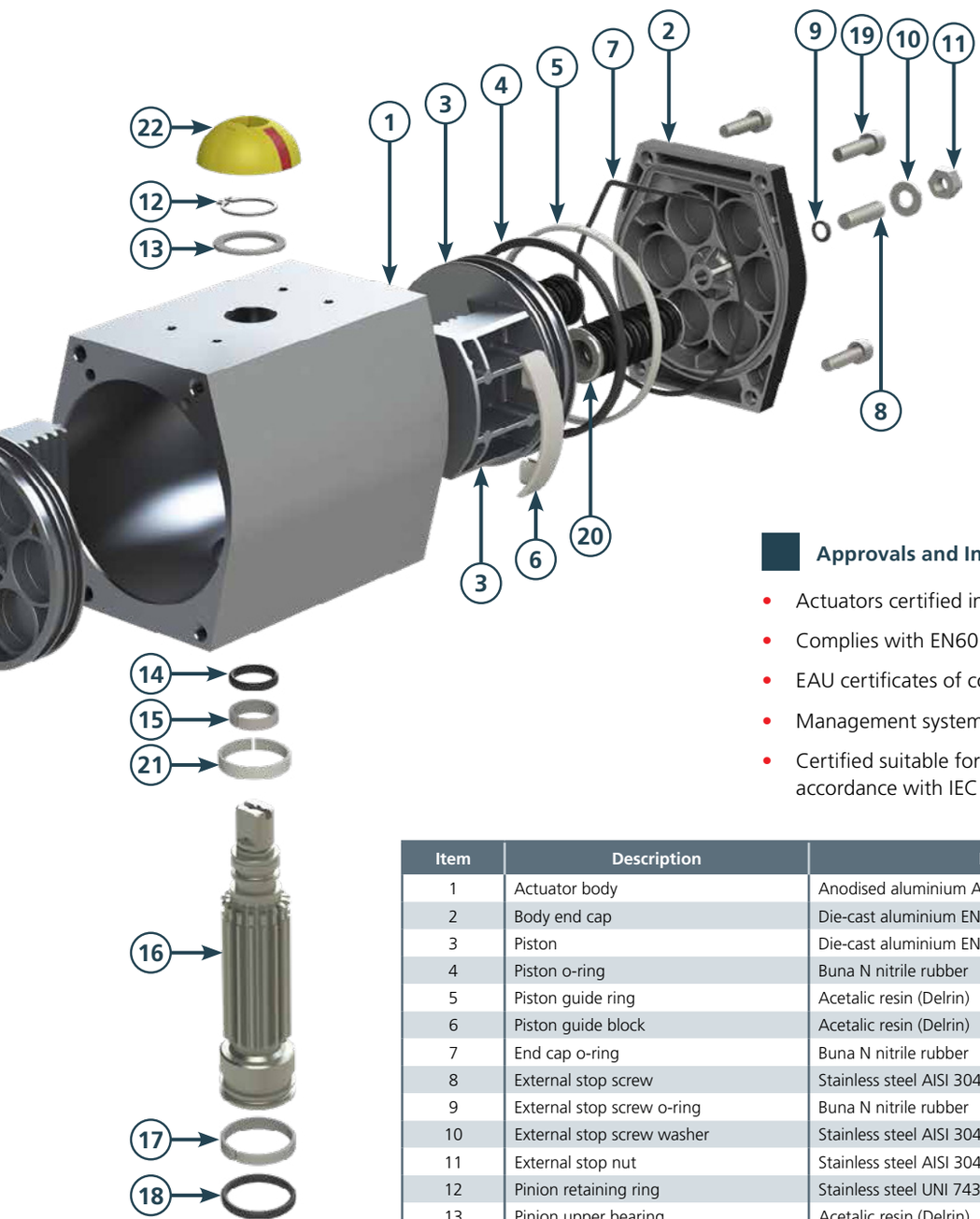

Approvals and Industry Standards

- Actuators certified in accordance with 2014/34/EU
- Complies with EN60529 (1991) + (A1:2000) for IP66M
- EAU certificates of conformity
- Management system in accordance with ISO 9001:2008
- Certified suitable for use at SIL3 as a single device in accordance with IEC 61508

Item	Description	Material	Quantity
1	Actuator body	Anodised aluminium ASTM 60663	1
2	Body end cap	Die-cast aluminium EN AC-46100	2
3	Piston	Die-cast aluminium EN AC-46100	2
4	Piston o-ring	Buna N nitrile rubber	2
5	Piston guide ring	Acetalic resin (Delrin)	2
6	Piston guide block	Acetalic resin (Delrin)	2
7	End cap o-ring	Buna N nitrile rubber	2
8	External stop screw	Stainless steel AISI 304	2
9	External stop screw o-ring	Buna N nitrile rubber	2
10	External stop screw washer	Stainless steel AISI 304	2
11	External stop nut	Stainless steel AISI 304	2
12	Pinion retaining ring	Stainless steel UNI 7435	1
13	Pinion upper bearing	Acetalic resin (Delrin)	1
14	Pinion upper o-ring	Buna N nitrile rubber	1
15	Pinion upper guide bearing	Acetalic resin (Delrin)	1
16	Pinion	Carbon steel 11SMNPB37 (electroless nickel plated)	1
17	Pinion lower guide bearing	Acetalic resin (Delrin)	1
18	Pinion lower o-ring	Buna N nitrile rubber	1
19	End cap retaining screws	Stainless steel AISI 304	8
20	Spring cartridge	Steel (epoxy painted)	0-12
21	Anti-blowout ring	Polyarylamide	1
22	Position indicator	Nylon 6	1

1. GT range actuators are available with either single- or dual-direction of travel stop adjustment, except on the smallest sizes, 33, 34, 43, and 44 which are adjustable only at the outboard end of piston travel. Outboard stop adjustment is +/- 5° (e.g. 85° - 95°). Inboard stop adjustment is +5°/-25°.

The illustration and parts list above depict an actuator with single-direction travel stop adjustment, standard temperature build.

Polígono Industrial O Rebullón s/n. 36416 - Mos - España - rodavigo@rodavigo.com

Torque Output Data

Double-Acting Actuators

Model	Pneumatic Torque (Nm)													
	2 bar	2.5 bar	3 bar	3.5 bar	4 bar	4.5 bar	5 bar	5.5 bar	6 bar	6.5 bar	7 bar	8 bar	9 bar	10 bar
33, 34	2.4	2.9	3.5	4.1	4.7	5.2	5.8	6.5	7.0	7.6	8.2	9.4	10.5	11.7
43, 44	4.7	5.8	7.0	8.2	9.4	10.5	11.7	13.1	14.0	15.2	16.4	18.7	21.0	23.4
52	7.8	9.7	11.7	13.6	15.6	17.5	19.5	21.8	23.4	25.3	27.3	31.2	35.1	39.0
63	11.6	14.5	17.4	20.3	23.2	26.1	29.0	32.5	34.8	37.7	40.6	46.4	52.2	58.0
75	20.0	25.0	30.0	35.0	40.0	45.0	50.0	56.0	60.0	65.0	70.0	80.0	90.0	100.0
83	29.0	36.2	43.5	50.7	58.0	65.2	72.5	81.2	87.0	94.2	101.5	116.0	130.5	145.0
92	40.0	50.0	60.0	70.0	80.0	90.0	100.0	112.0	120.0	130.0	140.0	160.0	180.0	200.0
110	58.0	72.5	87.0	101.5	116.0	130.5	145.0	162.4	174.0	188.5	203.0	232.0	261.0	290.0
118	86.0	107.5	129.0	150.5	172.0	193.5	215.0	240.8	258.0	279.5	301.0	344.0	387.0	430.0
127	116.0	145.0	174.0	203.0	232.0	261.0	290.0	324.8	348.0	377.0	406.0	464.0	522.0	580.0
143	186.0	232.5	279.0	325.5	372.0	418.5	465.0	520.8	558.0	604.5	651.0	744.0	837.0	930.0
160	230.0	287.5	345.0	402.5	460.0	517.5	575.0	644.0	690.0	747.5	805.0	920.0	1,035	1,150
190	400.0	500.0	600.0	700.0	800.0	900.0	1,000	1,120	1,200	1,300	1,400	1,600	1,800	2,000
210	480.0	600.0	720.0	840.0	959.9	1,080	1,200	1,344	1,440	1,560	1,680	1,920	2,160	2,400
253	690.5	863.1	1,035	1,208	1,381	1,553	1,726	1,933	2,071	2,244	2,416	2,762	3,107	3,452
254	920.0	1,150	1,380	1,610	1,840	2,070	2,300	2,576	2,760	2,990	3,220	3,680	4,140	4,600
255	1,160	1,450	1,740	2,030	2,320	2,610	2,900	3,248	3,480	3,770	4,060	4,640	5,220	5,800
300, 300-F25	1,600	2,000	2,400	2,800	3,200	3,600	4,000	4,480	4,800	5,200	5,600	6,400	7,200	8,000
302, 302-F25	3,060	3,825	4,590	5,355	6,120	6,885	7,650	8,568	9,180	9,945	10,710	12,240	13,770	15,300

Single-Acting Actuators

Model	Springs	Spring Torque (Nm)		Pneumatic Torque (Nm)																			
				2 bar		3 bar		4 bar		5 bar		5.5 bar		6 bar		7 bar		8 bar		9 bar		10 bar	
		0°	90°	0°	90°	0°	90°	0°	90°	0°	90°	0°	90°	0°	90°	0°	90°	0°	90°	0°	90°	0°	90°
43, 44	2	1.68	2.53	2.97	2.09	5.31	4.43	7.64	6.77	9.98	9.11	11.39	10.51	12.32	11.45	14.66	13.79	17.00	16.12	19.34	18.46	21.68	20.80
	4	3.36	5.07	-	-	3.59	1.85	5.93	4.18	8.27	6.52	9.68	7.93	10.61	8.86	12.95	11.20	15.29	13.54	17.63	15.88	19.97	18.22
	6	5.03	7.60	-	-	-	-	4.22	1.60	6.56	3.94	7.96	5.34	8.90	6.28	11.24	8.61	13.58	10.95	15.92	13.29	18.26	15.63
	8	6.71	10.14	-	-	-	-	-	-	4.85	1.35	6.25	2.75	7.19	3.69	9.53	6.03	11.87	8.37	14.21	10.71	16.54	13.05
52	2	1.91	3.19	5.84	4.54	9.74	8.44	13.64	12.34	17.54	16.23	19.87	18.57	21.43	20.13	25.33	24.03	29.23	27.92	33.12	31.82	37.02	35.72
	4	3.82	6.37	3.90	1.29	7.79	5.19	11.69	9.09	15.59	12.98	17.92	15.32	19.48	16.88	23.38	20.78	28.28	24.67	31.17	28.57	35.07	32.47
	6	5.73	9.56	-	-	5.84	1.94	9.74	5.83	13.64	9.73	15.98	12.07	17.53	13.63	21.43	17.52	25.33	21.42	29.23	25.32	33.12	29.22
	8	7.64	12.75	-	-	-	-	7.79	2.58	11.69	6.48	14.03	8.82	15.59	10.38	19.48	14.27	23.38	18.17	27.28	22.07	31.17	25.96
	10	9.55	15.94	-	-	-	-	-	-	9.74	3.23	12.08	5.57	13.64	7.13	17.53	11.02	21.43	14.92	25.33	18.82	29.22	22.71
	12	11.46	19.12	-	-	-	-	-	-	-	-	10.13	2.32	11.69	3.88	15.59	7.77	19.48	11.67	23.38	15.57	27.28	19.46
63	2	3.01	4.42	8.54	7.09	14.34	12.89	20.14	18.69	25.94	24.50	29.42	27.98	31.74	30.30	37.54	36.10	43.34	41.90	49.14	47.70	54.94	53.50
	4	6.01	8.84	5.47	2.58	11.27	8.38	17.07	14.18	22.87	19.99	26.35	23.47	28.67	25.79	34.47	31.59	40.27	37.39	46.08	43.19	51.88	48.99
	6	9.02	13.26	-	-	8.20	3.87	14.00	9.68	19.81	15.48	23.29	18.96	25.61	21.28	31.41	27.08	37.21	32.88	43.01	38.68	48.81	44.48
	8	12.03	17.68	-	-	-	-	10.94	5.17	16.74	10.97	20.22	14.45	22.54	16.77	28.34	22.57	34.14	28.37	39.94	34.17	45.74	39.97
	10	15.03	22.11	-	-	-	-	-	-	13.67	6.46	17.15	9.94	19.47	12.26	25.27	18.06	31.08	23.86	36.88	29.66	42.68	35.46
	12	18.04	26.53	-	-	-	-	-	-	-	-	14.09	5.43	16.41	7.75	22.21	13.55	28.01	19.35	33.81	25.15	39.61	30.95
75	2	5.24	7.96	14.65	11.87	24.65	21.87	34.65	31.87	44.65	41.87	50.65	47.87	54.64	51.87	64.64	61.86	74.64	71.86	84.64	81.86	94.64	91.86
	4	10.48	15.93	9.31	3.75	19.31	13.75	29.31	23.75	39.30	33.75	45.30	39.74	49.30	43.74	59.30	53.74	69.30	63.74	79.30	73.74	89.29	83.74
	6	15.71	23.89	-	-	13.96	5.63	23.96	15.63	33.96	25.62	39.96	31.62	43.96	35.62	53.96	45.62	63.95	55.62	73.95	65.62	83.95	75.61
	8	20.95	31.85	-	-	-	-	18.62	7.50	28.62	17.50	34.62	23.50	38.62	27.50	48.61	37.50	58.61	47.50	68.61	57.49	78.61	67.49
	10	26.19	39.81	-	-	-	-	-	-	23.27	9.38	29.27	15.38	33.27	19.38	43.27	29.38	53.27	39.37	63.27	49.37	73.26	59.37
	12	31.43	47.78	-	-	-	-	-	-	17.93	1.26	23.93	7.26	27.93	11.26	37.93	21.25	47.93	31.25	57.92	41.25	67.92	51.25
83	2	7.23	11.19	21.62	17.58	36.12	32.07	50.62	46.57	65.11	61.07	73.81	69.77	79.61	75.56	94.11	90.06	108.6	104.6	123.1	119.1	137.6	133.6
	4	14.46	22.39	14.25	6.16	28.75	20.65	43.24	35.15	57.74	49.65	66.44	58.35	72.24	64.15	86.73	78.64	101.2	93.14	115.7	107.6	130.2	122.1
	6	21.68	33.58	-	-	21.37	9.24	35.87	23.73	50.37	38.23	59.07	46.93	64.86	52.73	79.36	67.23	93.86	81.72	108.4	96.22	122.9	110.7
	8	28.91	44.78	-	-	-	-	28.50	12.31	42.99	26.81	51.69	35.51	57.49	41.31	71.99	55.81	86.49	70.30	101.0	84.80	115.5	99.30
	10	36.14	55.97	-	-	-	-	-	-	35.62	15.39	44.32	24.09	50.12	29.89	64.62	44.39	79.11	58.89	93.61	73.36	108.1	87.88
	12	43.37	67.17	-	-	-	-	-	-	28.25	3.98	36.95	12.67	42.75	18.47	57.24	32.97	71.74	47.47	86.24	61.96	100.7	76.46
92	2	9.10	14.34	30.72	25.37	50.73	45.38	70.73	65.38	90.73	85.38	102.7	97.39	110.7	105.4	130.7	125.4	150.7	145.4	170.7	165.4	190.7	185.4
	4	18.20	28.69	21.44	10.74	41.44	30.75	61.45	50.75	81.45	70.75	93.45	82.75	101.5	90.76	121.5	110.8	141.5	130.8	161.5	150.8	181.5	170.8
	6	27.31	43.03	-	-	32.16	16.12	52.16	36.12	72.16	56.12	84.17	68.12	92.17	76.12	112.2	96.13	132.2	116.1	152.2	136.1	172.2	156.1
	8	36.41	57.38	-	-	-	-	42.88	21.49	62.88	41.49	74.88	53.49	82.88	61.49	102.9	81.50	122.9	101.5	142.9	121.5	162.9	141.5
	10	45.51	71.72	-	-	-	-	33.59	6.86	53.60	26.86	65.60	38.86	73.60	46.86	93.60	66.86	113.6	86.87	133.6	106.9	153.6	126.9
	12	54.61	86.07	-	-	-	-	-	-	44.31	12.23	56.31	24.23	64.32	32.23	84.32	52.23	104.3	72.24	124.3	92.24	144.3	112.2

Torque Output Data

Single-Acting Actuators *continued*

Model	Springs	Spring Torque (Nm)		Pneumatic Torque (Nm)																			
				2 bar		3 bar		4 bar		5 bar		5.5 bar		6 bar		7 bar		8 bar		9 bar		10 bar	
		0°	90°	0°	90°	0°	90°	0°	90°	0°	90°	0°	90°	0°	90°	0°	90°	0°	90°	0°	90°	0°	90°
110	2	15.81	23.71	41.9	33.8	70.9	62.8	99.9	91.8	128.9	120.8	146.3	138.2	157.9	149.8	186.9	178.8	215.9	207.8	244.9	236.8	273.9	265.8
	4	31.61	47.42	25.8	9.6	54.8	38.6	83.8	67.6	112.8	96.6	130.2	114.1	141.8	125.7	170.8	154.7	199.8	183.7	228.8	212.7	257.8	241.7
	6	47.42	71.13	-	-	38.6	14.5	67.6	43.5	96.6	72.5	114.1	89.9	125.7	101.5	154.7	130.5	183.7	159.5	212.7	188.5	241.7	217.5
	8	63.22	94.84	-	-	-	-	51.5	19.3	80.5	48.3	97.9	65.7	109.5	77.3	138.5	106.3	167.5	135.3	196.5	164.3	225.5	193.3
	10	79.03	118.5	-	-	-	-	-	-	64.4	24.1	81.8	41.5	93.4	53.1	122.4	82.1	151.4	111.1	180.4	140.1	209.4	169.1
	12	94.84	142.3	-	-	-	-	-	-	-	-	65.7	17.3	77.3	28.9	106.3	57.9	135.3	86.9	164.3	115.9	193.3	144.9
118	2	21.25	36.46	64.3	48.8	107.3	91.8	150.3	134.8	193.3	177.8	219.1	203.6	236.3	220.8	279.3	263.8	322.3	306.8	365.3	349.8	408.3	392.8
	4	42.50	72.92	42.7	11.6	85.7	54.6	128.7	97.6	171.7	140.6	197.5	166.4	214.7	183.6	257.7	226.6	300.7	269.6	343.7	312.6	386.7	355.6
	6	63.75	109.4	-	-	64.0	17.4	107.0	60.4	150.0	103.4	175.8	129.2	193.0	146.4	236.0	189.4	279.0	232.4	322.0	275.4	365.0	318.4
	8	84.99	145.8	-	-	-	-	85.3	23.3	128.3	66.3	154.1	92.1	171.3	109.3	214.3	152.3	257.3	195.3	300.3	238.3	343.3	281.3
	10	106.2	182.3	-	-	-	-	-	-	106.6	29.1	132.4	54.9	149.6	72.1	192.6	115.1	235.6	158.1	278.6	201.1	321.6	244.1
	12	127.5	218.7	-	-	-	-	-	-	-	-	110.8	17.7	128.0	34.9	171.0	77.9	214.0	120.9	257.0	163.9	300.0	206.9
127	2	29.94	48.78	85.5	66.2	143.5	124.2	201.5	182.2	259.5	240.2	294.2	275.0	317.4	298.2	375.4	356.2	433.4	414.2	491.4	472.2	549.4	530.2
	4	59.88	97.57	54.9	16.5	112.9	74.5	170.9	132.5	228.9	190.5	263.7	225.3	286.9	248.5	344.9	306.5	402.9	364.5	460.9	422.5	518.9	480.5
	6	89.82	146.3	-	-	82.4	24.7	140.4	82.7	198.4	140.7	233.2	175.5	256.4	198.7	314.4	256.7	372.4	314.7	430.4	372.7	488.4	430.7
	8	119.8	195.1	-	-	-	-	109.8	33.0	167.8	91.0	202.6	125.8	225.8	149.0	283.8	206.9	341.8	264.9	399.8	322.9	457.8	380.9
	10	149.7	243.9	-	-	-	-	-	-	137.3	41.2	172.1	76.0	195.3	99.2	253.3	157.2	311.3	215.2	369.3	273.2	427.3	331.2
	12	179.6	292.7	-	-	-	-	-	-	-	-	141.6	26.2	164.8	49.4	222.8	107.4	280.8	165.4	338.8	223.4	396.8	281.4
143	2	48.1	68.9	137.0	115.7	230.0	208.7	323.0	301.7	416.0	394.7	471.8	450.5	509.0	487.7	602.0	580.7	695.0	673.7	788.0	766.7	881.0	859.8
	4	96.1	137.8	87.9	45.5	181.0	138.5	274.0	231.5	367.0	324.5	422.8	380.3	460.0	417.5	553.0	510.5	646.0	603.5	739.0	696.5	832.0	789.5
	6	144.2	206.7	-	-	131.9	68.2	224.9	161.2	317.9	254.2	373.7	310.0	410.9	347.2	503.9	440.2	596.9	533.2	689.9	626.2	782.9	719.2
	8	192.3	275.6	-	-	-	-	175.9	90.9	268.9	183.9	324.7	239.7	361.9	276.9	454.9	369.9	547.9	462.9	640.9	555.9	733.9	648.9
	10	240.3	344.4	-	-	-	-	126.9	20.7	219.9	113.7	275.7	169.5	312.9	206.7	405.9	299.7	498.9	392.7	591.9	485.7	684.9	578.7
	12	288.4	413.3	-	-	-	-	-	-	170.8	43.4	226.6	99.2	263.8	136.4	356.8	229.4	449.8	322.4	542.9	415.4	635.9	508.4
160	2	55.9	83.0	172.4	144.5	287.4	259.5	402.5	374.5	517.5	489.5	586.5	558.5	632.5	604.5	747.5	719.5	862.5	834.5	977.5	949.5	1,092	1,065
	4	111.8	166.0	114.9	59.0	229.9	174.0	344.9	289.0	459.9	404.0	528.9	473.0	574.9	519.0	689.9	634.1	804.9	749.1	919.9	864.1	1,035	979.1
	6	167.6	249.0	-	-	172.3	88.6	287.3	203.6	402.3	318.6	471.3	387.6	517.3	433.6	632.3	548.6	747.3	663.6	862.3	778.6	977.3	893.6
	8	223.5	332.0	-	-	-	-	229.8	118.1	344.8	233.1	413.8	302.1	459.8	348.1	574.8	463.1	689.8	578.1	804.8	693.1	919.8	808.1
	10	279.4	415.0	-	-	-	-	172.2	32.6	287.2	147.6	356.2	216.6	402.2	262.6	517.2	377.6	632.2	492.6	747.2	607.6	862.2	722.6
	12	335.3	498.0	-	-	-	-	-	-	229.7	62.1	298.7	131.1	344.7	177.1	459.7	292.1	574.7	407.1	689.7	522.1	804.7	637.1
190	2	106.2	133.9	290.6	262.1	490.6	462.1	690.6	662.1	890.6	862.1	1,011	982.1	1,091	1,062	1,291	1,262	1,491	1,462	1,691	1,662	1,891	1,862
	4	212.5	267.8	181.2	124.2	381.2	324.2	581.2	524.2	781.2	724.2	901.2	844.2	981.2	924.2	1,181	1,124	1,381	1,324	1,581	1,524	1,781	1,724
	6	318.7	401.7	-	-	271.8	186.3	471.8	386.3	671.8	586.3	791.8	706.3	871.8	786.3	1,072	986.3	1,272	1,186	1,472	1,386	1,672	1,586
	8	424.9	535.6	-	-	162.4	48.4	362.4	248.4	562.4	448.4	682.4	568.4	762.4	648.4	962.4	848.4	1,162	1,048	1,362	1,248	1,562	1,448
	10	531.2	669.5	-	-	-	-	253.0	110.5	453.0	310.5	573.0	430.5	653.0	510.5	853.0	710.5	1,053	910.5	1,253	1,111	1,453	1,311
	12	637.4	803.4	-	-	-	-	-	-	343.5	172.6	463.6	292.6	543.6	372.6	743.6	572.6	943.6	772.6	1,144	972.6	1,344	1,173
210	2	114.2	160.7	362.4	314.5	602.3	554.5	842.3	794.5	1,082	1,034	1,226	1,178	1,322	1,274	1,562	1,514	1,802	1,754	2,042	1,994	2,282	2,234
	4	228.4	321.3	244.7	149.0	484.7	389.0	724.7	629.0	964.7	868.9	1,109	1,016	1,205	1,109	1,445	1,349	1,685	1,589	1,925	1,829	2,165	2,069
	6	342.6	482.0	-	-	367.1	223.5	607.1	463.5	847.1	703.5	991.1	847.4	1,097	943.4	1,327	1,183	1,567	1,423	1,807	1,663	2,047	1,903
	8	456.8	642.7	-	-	249.5	58.0	489.5	298.0	729.4	538.0	873.4	682.0	969.4	777.9	1,209	1,018	1,449	1,258	1,689	1,498	1,929	1,738
	10	571.0	803.4	-	-	-	-	371.8	132.5	611.8	372.5	755.8	516.5	851.8	612.5	1,092	852.4	1,332	1,092	1,572	1,332	1,812	1,572
	12	685.2	964.0	-	-	-	-	-	-	494.2	207.0	638.2	351.0	734.2	447.0	974.2	686.9	1,214	926.9	1,454	1,167	1,694	1,407
253	1	83.8	115.3	607.4	576.3	952.7	921.6	1,298	1,266	1,643	1,612	1,850	1,819	1,988	1,957	2,333	2,302	2,679	2,647	3,024	2,993	3,369	3,338
	2	167.7	230.6	524.4	462.2	869.7	807.4	1,214	1,152	1,560	1,498	1,767	1,705	1,905	1,843	2,250	2,188	2,596	2,533	2,941	2,879	3,286	3,224
	3	251.6	345.9	441.4	348.0	786.6	693.3	1,131	1,038	1,477	1,383	1,684	1,591	1,822	1,729	2,167	2,074	2,513	2,419	2,858	2,764	3,203	3,110
	4	335.5	461.2	358.3	233.8	703.6	579.1	1,048	924.4	1,394	1,269	1,601	1,476	1,739	1,614	2,084	1,960	2,429	2,305	2,775	2,650	3,120	2,996
	5	419.3	576.5	275.3	119.7	620.6	465.0	965.8	810.2	1,311	1,155	1,518	1,362	1,656	1,500	2,001	1,846	2,346	2,191	2,692	2,536	3,037	2,881
	6	503.2	691.8	-	-	537.5	350.8	882.8	696.1	1,228	1,041	1,435	1,248	1,573	1,386	1,918	1,731	2,263	2,077	2,609	2,422	2,954	2,767
	7	587.1	807.1	-	-	454.5	236.6	799.8	581.9	1,145	927.2	1,352	1,134	1,490	1,272	1,835	1,617	2,180	1,963	2,526	2,308	2,871	2,653
	8	671.0	922.5	-	-	371.5	122.5	716.7	467.7	1,062	813.0	1,269	1,020	1,407	1,158	1,752	1,503	2,097	1,848	2,443	2,194	2,788	2,539
	9	754.8	1,037	-	-	-	-	633.7	353.6	978.9	698.8	1,186	906.0	1,324	1,044	1,669	1,389	2,014	1,734	2,360	2,079	2,705	2,425
	10	838.7	1,153	-	-	-	-	550.6	239.4	895.9	584.7	1,103	791.8	1,241	929.9	1,586	1,275	1,931	1,620	2,277	1,965	2,622	2,311
	11	922.6	1,268	-	-	-	-	-	-	812.9	470.5	1,020	677.7	1,158	815.8	1,503	1,161	1,848	1,506	2,193	1,851	2,539	2,196
	12	1,006	1,383	-	-	-	-	-	-	729.8	356.4	937.0	563.5	1,075	701.6	1,420	1,046	1,765	1,392	2,110	1,737	2,456	2,082

Torque Output Data

Single-Acting Actuators *continued*

Model	Springs	Spring Torque (Nm)		Pneumatic Torque (Nm)																			
				2 bar		3 bar		4 bar		5 bar		5.5 bar		6 bar		7 bar		8 bar		9 bar		10 bar	
		0°	90°	0°	90°	0°	90°	0°	90°	0°	90°	0°	90°	0°	90°	0°	90°	0°	90°	0°	90°	0°	90°
254	2	238.1	321.3	674.8	589.1	1,135	1,049	1,595	1,509	2,055	1,969	2,331	2,245	2,515	2,429	2,975	2,889	3,435	3,349	3,895	3,809	4,355	4,269
	4	476.3	642.7	429.5	258.1	889.6	718.2	1,350	1,178	1,810	1,638	2,086	1,914	2,270	2,098	2,730	2,558	3,190	3,018	3,650	3,478	4,110	3,938
	6	714.4	964.0	-	-	644.3	387.2	1,104	847.2	1,564	1,307	1,840	1,583	2,024	1,767	2,484	2,227	2,945	2,687	3,405	3,147	3,865	3,607
	8	952.5	1,285	-	-	-	-	859.1	516.2	1,319	976	1,595	1,252	1,779	1,436	2,239	1,896	2,699	2,356	3,159	2,816	3,619	3,276
	10	1,191	1,607	-	-	-	-	613.8	185.2	1,074	645	1,350	921	1,534	1,105	1,994	1,565	2,454	2,025	2,914	2,485	3,374	2,945
	12	1,429	1,928	-	-	-	-	-	-	829	314	1,105	590	1,289	774	1,749	1,234	2,209	1,694	2,669	2,154	3,129	2,614
255	2	272.2	406.1	880	742	1,460	1,322	2,040	1,902	2,620	2,482	2,968	2,830	3,200	3,062	3,780	3,642	4,360	4,222	4,940	4,802	5,520	5,382
	4	544.4	812.2	599	323	1,179	903	1,759	1,484	2,339	2,064	2,687	2,412	2,919	2,644	3,499	3,224	4,079	3,804	4,659	4,384	5,239	4,964
	6	816.6	1,218	-	-	899	485	1,479	1,065	2,059	1,645	2,407	1,993	2,639	2,225	3,219	2,805	3,799	3,385	4,379	3,965	4,959	4,545
	8	1,089	1,624	-	-	-	-	1,199	647	1,779	1,227	2,127	1,575	2,359	1,807	2,939	2,387	3,519	2,967	4,099	3,547	4,679	4,127
	10	1,361	2,031	-	-	-	-	918	229	1,498	809	1,846	1,157	2,078	1,389	2,658	1,969	3,238	2,549	3,818	3,129	4,398	3,709
	12	1,633	2,437	-	-	-	-	-	-	1,218	390	1,566	738	1,798	970	2,378	1,550	2,958	2,130	3,538	2,710	4,118	3,290
300, 300-F25	1	136	203	1,460	1,391	2,260	2,191	3,060	2,991	3,860	3,791	4,340	4,271	4,660	4,591	5,460	5,391	6,260	6,191	7,060	6,991	7,860	7,791
	2	272	406	1,320	1,182	2,120	1,982	2,920	2,782	3,720	3,582	4,200	4,062	4,520	4,382	5,320	5,182	6,120	5,982	6,920	6,782	7,720	7,582
	3	408	609	1,179	973	1,979	1,773	2,779	2,573	3,579	3,373	4,059	3,853	4,379	4,173	5,179	4,973	5,979	5,773	6,779	6,573	7,579	7,373
	4	544	812	1,039	763	1,839	1,563	2,639	2,363	3,439	3,163	3,919	3,643	4,239	3,963	5,039	4,763	5,839	5,563	6,639	6,363	7,439	7,163
	5	681	1,015	899	554	1,699	1,354	2,499	2,154	3,299	2,954	3,779	3,434	4,099	3,754	4,899	4,554	5,699	5,354	6,499	6,154	7,299	6,954
	6	817	1,218	759	345	1,559	1,145	2,359	1,945	3,159	2,745	3,639	3,225	3,959	3,545	4,759	4,345	5,559	5,145	6,359	5,945	7,159	6,745
	7	953	1,421	619	136	1,419	936	2,219	1,736	3,019	2,536	3,499	3,016	3,819	3,336	4,619	4,136	5,419	4,936	6,219	5,736	7,019	6,536
	8	1,089	1,624	-	-	1,278	727	2,078	1,527	2,878	2,327	3,358	2,807	3,678	3,127	4,479	3,927	5,279	4,727	6,079	5,527	6,879	6,327
	9	1,225	1,827	-	-	1,138	518	1,938	1,318	2,738	2,118	3,218	2,598	3,538	2,918	4,338	3,718	5,138	4,518	5,938	5,318	6,738	6,118
	10	1,361	2,031	-	-	998	309	1,798	1,109	2,598	1,909	3,078	2,389	3,398	2,709	4,198	3,509	4,998	4,309	5,798	5,109	6,598	5,909
	11	1,497	2,234	-	-	-	-	1,658	899	2,458	1,699	2,938	2,179	3,258	2,499	4,058	3,299	4,858	4,099	5,658	4,899	6,458	5,699
	12	1,633	2,437	-	-	-	-	1,518	690	2,318	1,490	2,798	1,970	3,118	2,290	3,918	3,090	4,718	3,890	5,518	4,690	6,318	5,490
	13	1,769	2,640	-	-	-	-	1,378	481	2,178	1,281	2,658	1,761	2,978	2,081	3,778	2,881	4,578	3,681	5,378	4,481	6,178	5,281
	14	1,906	2,843	-	-	-	-	1,237	272	2,037	1,072	2,517	1,552	2,837	1,872	3,637	2,672	4,437	3,472	5,237	4,272	6,037	5,072
	15	2,042	3,046	-	-	-	-	-	-	1,897	863	2,377	1,343	2,697	1,663	3,497	2,463	4,297	3,263	5,097	4,063	5,897	4,863
	16	2,178	3,249	-	-	-	-	-	-	1,757	654	2,237	1,134	2,557	1,454	3,357	2,254	4,157	3,054	4,957	3,854	5,757	4,654
302, 302-F25	10	1,135	1,930	1,940	1,122	3,470	2,652	5,000	4,182	6,530	5,712	7,448	6,630	8,060	7,242	9,590	8,772	11,120	10,302	12,650	11,832	14,180	13,362
	11	1,249	2,123	1,828	928.0	3,358	2,458	4,888	3,988	6,418	5,518	7,336	6,436	7,948	7,048	9,478	8,578	11,008	10,108	12,538	11,638	14,068	13,168
	12	1,362	2,316	-	-	3,246	2,264	4,776	3,794	6,306	5,324	7,224	6,242	7,836	6,854	9,366	8,384	10,896	9,914	12,426	11,444	13,956	12,974
	13	1,476	2,509	-	-	3,134	2,071	4,664	3,601	6,194	5,131	7,112	6,049	7,724	6,661	9,254	8,191	10,784	9,721	12,314	11,251	13,844	12,781
	14	1,589	2,702	-	-	3,022	1,877	4,552	3,407	6,082	4,937	7,000	5,855	7,612	6,467	9,142	7,997	10,672	9,527	12,202	11,057	13,732	12,587
	15	1,703	2,895	-	-	2,910	1,683	4,440	3,213	5,970	4,743	6,888	5,661	7,500	6,273	9,030	7,803	10,560	9,333	12,090	10,863	13,620	12,393
	16	1,816	3,088	-	-	2,798	1,489	4,328	3,019	5,858	4,549	6,776	5,467	7,388	6,079	8,918	7,609	10,448	9,139	11,978	10,669	13,508	12,199
	17	1,930	3,281	-	-	2,686	1,295	4,216	2,825	5,746	4,355	6,664	5,273	7,276	5,885	8,806	7,415	10,336	8,945	11,866	10,475	13,396	12,005
	18	2,043	3,474	-	-	2,574	1,102	4,104	2,632	5,634	4,162	6,552	5,080	7,164	5,692	8,694	7,222	10,224	8,752	11,754	10,282	13,284	11,812
	19	2,157	3,667	-	-	-	-	3,992	2,438	5,522	3,968	6,440	4,886	7,052	5,498	8,582	7,028	10,112	8,558	11,642	10,088	13,172	11,618
	20	2,270	3,860	-	-	-	-	3,880	2,244	5,410	3,774	6,328	4,692	6,940	5,304	8,470	6,834	10,000	8,364	11,530	9,894	13,060	11,424
	21	2,384	4,053	-	-	-	-	3,768	2,050	5,298	3,580	6,216	4,498	6,828	5,110	8,358	6,640	9,888	8,170	11,418	9,700	12,948	11,230
	22	2,497	4,246	-	-	-	-	3,656	1,856	5,186	3,386	6,104	4,304	6,716	4,916	8,246	6,446	9,776	7,976	11,306	9,506	12,836	11,036
	23	2,611	4,439	-	-	-	-	3,544	1,663	5,074	3,193	5,992	4,111	6,604	4,723	8,134	6,253	9,664	7,783	11,194	9,313	12,724	10,843
	24	2,724	4,632	-	-	-	-	3,432	1,469	4,962	2,999	5,880	3,917	6,492	4,529	8,022	6,059	9,552	7,589	11,082	9,119	12,612	10,649
	25	2,838	4,825	-	-	-	-	3,320	1,275	4,850	2,805	5,768	3,723	6,380	4,335	7,910	5,865	9,440	7,395	10,970	8,925	12,500	10,455
	26	2,951	5,018	-	-	-	-	3,208	1,081	4,738	2,611	5,656	3,529	6,268	4,141	7,798	5,671	9,328	7,201	10,858	8,731	12,388	10,261
	27	3,065	5,211	-	-	-	-	-	-	4,626	2,417	5,544	3,335	6,156	3,947	7,686	5,477	9,216	7,007	10,746	8,537	12,276	10,067
	28	3,178	5,404	-	-	-	-	-	-	4,514	2,224	5,432	3,142	6,044	3,754	7,574	5,284	9,104	6,814	10,634	8,344	12,164	9,874
	29	3,292	5,597	-	-	-	-	-	-	4,402	2,030	5,320	2,948	5,932	3,560	7,462	5,090	8,992	6,620	10,522	8,150	12,052	9,680
	30	3,405	5,790	-	-	-	-	-	-	4,290	1,836	5,208	2,754	5,820	3,366	7,350	4,896	8,880	6,426	10,410	7,956	11,940	9,486
	31	3,519	5,983	-	-	-	-	-	-	4,178	1,642	5,096	2,560	5,708	3,172	7,238	4,702	8,768	6,232	10,298	7,762	11,828	9,292
	32	3,632	6,176	-	-	-	-	-	-	4,066	1,448	4,984	2,366	5,596	2,978	7,126	4,508	8,656	6,038	10,186	7,568	11,716	9,098

Dimension Data and Mounting Standards

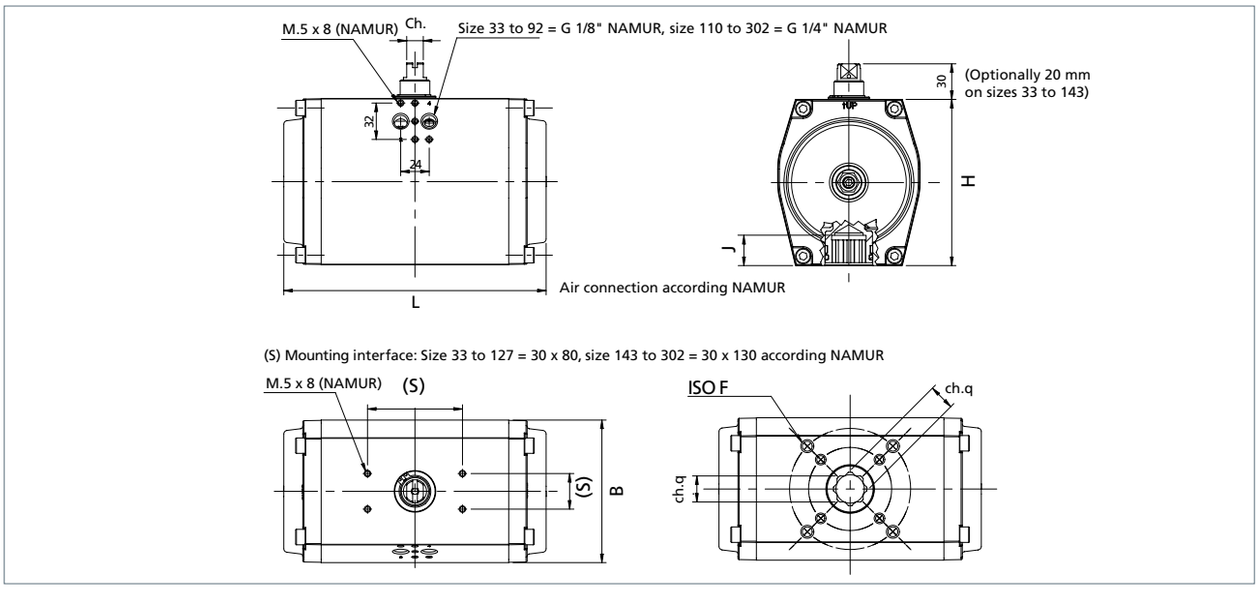

Model	Dimensions (mm)									Displacement (dm^3)				Weight (kg)			
	L			H	J	B	Ch	Ch.q	ISO	SR	DA			SR	DA		
	90°	120°	180°							90°	90°	120°	180°	90°	90°	120°	180°
33	90	-	-	65	13	61.5	10	9/11	F03	-	0.15	-	-	-	0.47	-	-
34	90	-	-	65	13	61.5	10	9/11	F04	-	0.15	-	-	-	0.47	-	-
43	116	-	-	65	13	61.5	10	9/11	F03/F05	0.10	0.18	-	-	0.66	0.60	-	-
44	116	-	-	65	13	61.5	10	9/11	F04	0.10	0.18	-	-	0.66	0.60	-	-
52	133	151	195	74	18	68.5	10	14	F03/F05	0.13	0.25	0.28	0.46	1.00	0.90	1.10	1.30
63	137	155	200	88	20	80	10	14	F05/F07	0.21	0.40	0.45	0.74	1.62	1.45	1.70	2.00
75	161	183	237	100	20	92.5	10	17	F05/F07	0.32	0.60	0.68	1.12	2.45	2.10	2.46	2.90
83	180	205	268	108	20	99.5	10	17	F05/F07	0.45	0.88	1.00	1.63	2.95	2.50	2.95	3.50
92	209	239	310	117	21	110.5	14	17	F05/F07	0.62	1.20	1.35	2.25	4.00	3.40	4.00	4.60
110	223	253	323	140	25.5	120	14	22	F07/F10	0.98	1.90	2.15	3.52	6.20	5.20	6.10	7.20
118	293	345	429	140	36	120	20	22	F07/F10	1.40	2.70	3.05	5.00	8.35	7.10	8.00	9.70
127	301	353	453	160	36	137	20	22	F07/F10	2.00	3.65	4.10	6.80	10.7	9.00	10.0	12.5
143	337	387	488	198	33	172	20	27	F10/F12	2.50	4.60	6.12	9.20	15.8	12.4	14.0	16.0
160	379	444	570	198	39	172	28	27	F10/F12	3.80	7.00	8.00	13.0	20.1	16.4	18.8	26.0
190	422	-	-	255	41	224	28	36	F14	6.50	12.5	-	-	37.8	28.0	-	-
210	468	544	696	255	40	224	32	36	F14	8.00	15.0	17.0	21.5	39.6	31.8	37.4	49.2
253	524	600	751	302	50	272	32	46	F16	10	19.2	22	29	56	44	50	63
254	609	711	911	302	50	272	32	46	F16	14.0	27.0	31.5	41.0	70.6	55.5	66.5	79.8
255	689	815	-	302	50	272	32	46	F16	17.0	32.0	38.0	-	84.3	69.2	77.0	-
300	689	814	-	360	50	360	32	46	F16	25	46	68	-	107.1	92	105	-
300-F25	689	814	-	392	65	360	32	55	F25	25	46	68	-	114	99	112	-
302	1,176	-	-	360	50	360	32	46	F16	46	84	-	-	179	144	-	-
302-F25	1,176	-	-	392	65	360	32	55	F25	46	84	-	-	179	154	-	-

Optional Body Air Connections

- UNI EN ISO 228 G 1/2" (sizes from 110 to 302)
- UNI EN ISO 228 G 3/4" (sizes from 253 to 302)
- UNI EN ISO 228 G 1" (sizes from 300 to 302)

Optional Bottom Flange Drilling

- ISO F04 (for sizes 52, 63, 75)
- ISO F05 (for size 110)
- ISO F07 (for size 143)
- ISO F10 and F12 (for size 190 and 210)
- ISO F12 (for size 127)
- ISO F14 (for size 253)
- ISO F12 and F16 (for size 254)
- ISO F25 (for sizes 300 and 302)

Optional Valve Shaft Interface

- Single square parallel ISO 5212
- Single square diagonal ISO 5213
- Double D

Note: standard is double square ISO 5211.

Polígono Industrial O Rebullón s/n. 36416 - Mos - España - rodavigo@rodavigo.com

Model Number Designation

Example Model Number **GTA - 52 - FC - 04 - W - ST**

Range and Rotation
GTA = 90° rotation
GTB = 120° rotation
GTC = 180° rotation

Body Size
33, 34, 43, 44, 52, 63, 75, 83, 92, 110, 118, 127, 143, 160, 190, 210, 253, 254, 255, 300, 302

Effect
DA = Double-acting
FC = Spring-return, fail to close (clockwise)
FO = Spring-return, fail to open (counter-clockwise)

Spring Set
01, 02 ,03, 04, 05, 06, 07, 08, 09, 10, 11, 12, 13, 14, 15, 16 17, 18, 19, 20, 21, 22, 23, 24, 25, 26, 27, 28, 29, 30, 31, 32 (not applicable for double-acting)

Travel Stop
X0 = No end stop (33, 34, 43 and 44 body size only)
K0 = Single direction +/- 5 degrees
K1 = Single direction +5 to -90 degrees
W0 = Dual direction +/- 5 degrees open, +5 to -25 degrees close
W1 = Dual direction +5 to -90 degrees open, +5 to -25 degrees close
Z0 = Blocked end stop

Temperature Range
ST = Standard -50 to +70 °C (-58 to +158 °F)
HT = High -15 to +160 °C (+5 to +320 °F)
ET = Extended -60 to +200 °C (-76 to +392 °F)
SX = Special (consult factory)

