KBM 79

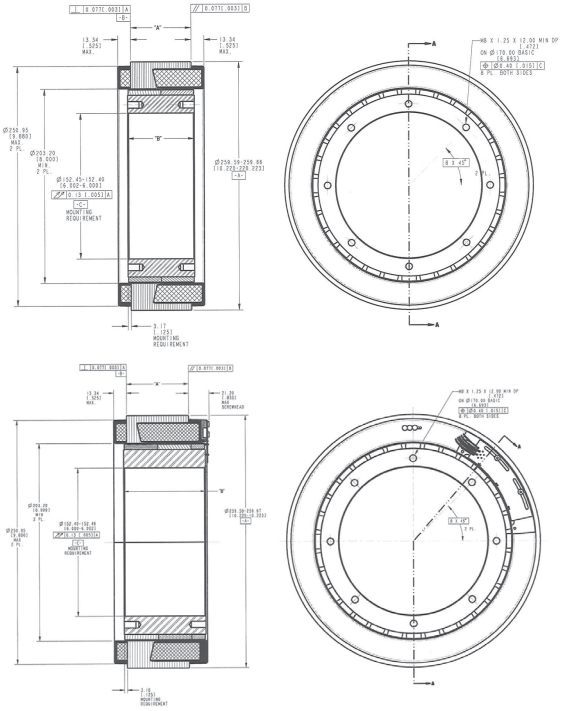

Model Number	"A" DIM	"B" DIM
KBM-79X01	31.75 [1.250]	38.10 [1.500]
KBM-79X02	63.50 [2.500]	69.85 [2.750]
KBM-79X03	127.00 [5.000]	133.35 [5.250]

MOTOR LEADS: #16 AWG TEFLON COATED
PER UL 1199, 400.00 [15.75] MIN LG.,
1- BLUE, 1- BROWN, 1-VIOLET

Model Number	"A" DIM	"B" DIM
KBMS-79X01	31.75 [1.250]	52.07 [2.050]
KBMS-79X02	63.50 [2.500]	83.82 [3.300]
KBMS-79X03	127.00 [5.000]	147.07 [5.790]

MOTOR LEADS: #16 AWG TEFLON COATED
PER UL 1199, 400.00 [15.75] MIN LG.,
1- BLUE, 1- BROWN, 1-VIOLET

SENSOR LEADS: #26 AWG TEFLON COATED
PER MIL-W-22759/11, 400.00 [15.75] MIN LG.,
1-BLUE, 1-ORANGE, 1-BROWN, 1-GREEN, 1-YELLOW

-Continuous duty capability for 130°C rise in a 25°C ambient using recommended AKD Servo Drive-

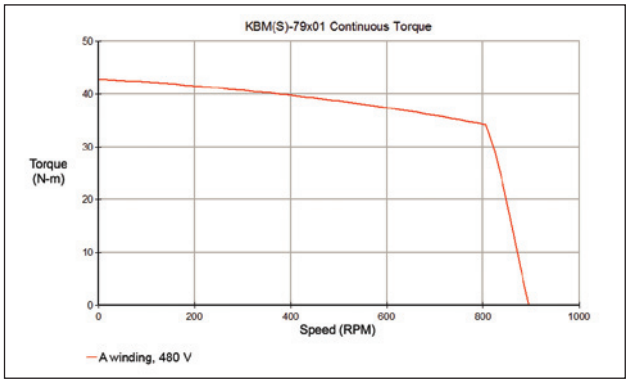

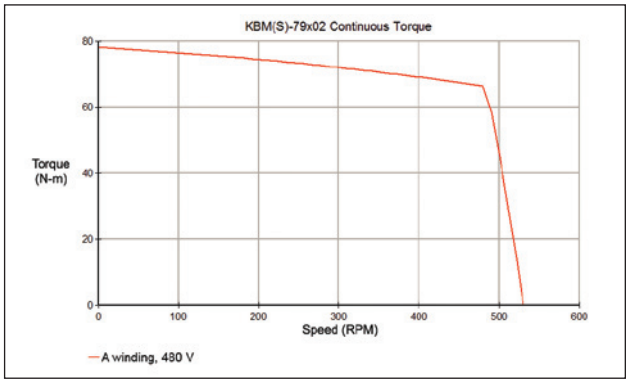

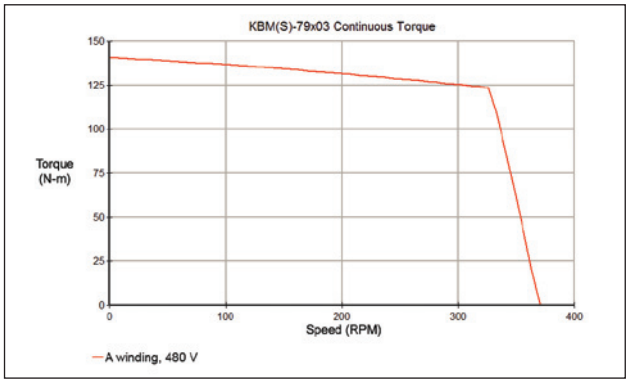

For details on the KBM Series of motors, including 2D drawings and 3D models, visit www.kollmorgen.com/kbm

KBM(S) Frameless Motor Series

KBM(S)-79XXX PERFORMANCE DATA & MOTOR PARAMETERS												
Motor Parameter	Symbol	Units	KBM(S)-79X01-X			KBM(S)-79X02-X			KBM(S)-79X03-X			
			A	B	C	A	B	C	A	B	C	
Continuous Stall Torque at 25°C amb (1)	Tc	N-m	43.5			79.6			143			
		lb-ft	32.1			58.7			106			
Continuous Current	Ic	Arms	4.95			5.40			6.76			
Peak Stall Torque (25°C winding temp)	Tp	N-m	152			319			637			
		lb-ft	112			235			470			
Peak Current	Ip	Arms	20.8			26.1			36.7			
Rated Continuous Output Power at 25°C amb (1)	P Rated	Watts	2585			2920			3750			
	HP Rated	HP	3.47			3.91			5.03			
Speed at Rated Power	N Rated	RPM	730			430			300			
Torque Sensitivity (2)	Kt	N-m / Arms	8.87			14.9			21.4			
		lb-ft / Arms	6.54			11.0			15.8			
Back EMF Constant (3)	Kb	Vpk / kRPM	758			1275			1832			
Motor Constant	Km	N-m/√watt	2.89			4.81			7.29			
		lb-ft/√watt	2.13			3.55			5.38			
Resistance (line to line)	Rm	Ohms	6.26			6.40			5.75			
Inductance	Lm	mH	23			32			34			
Inertia (KBM)	Jm	Kg-m²	3.25E-2			5.97E-2			0.114			
		lb-ft-s²	2.40E-2			4.40E-2			8.40E-2			
Weight (KBM)	Wt	Kg	9.21			16.9			32.1			
		lb	20.3			37.3			70.8			
Inertia (KBMS)	Jm	Kg-m²	4.45E-2			7.15E-2			0.125			
		lb-ft-s²	3.28E-2			5.27E-2			9.20E-2			
Weight (KBMS)	Wt	Kg	10.7			18.40			33.5			
		lb	23.5			40.5			73.9			
Max Static Friction	Tf	N-m	0.407			0.746			1.36			
		lb-ft	0.300			0.550			1.00			
Cogging Friction (Peak-to-Peak)	Tcog	N-m	0.136			0.244			0.447			
		lb-ft	0.100			0.180			0.330			
Viscous Damping	Fi	N-m/kRPM	2.44			15.5			31.2			
		lb-ft /kRPM	1.80			11.4			23.0			
Thermal Resistance (4)	TPR	°C / watt	0.377			0.311			0.220			
Number of Poles	P	-	32			32			32			
Recommended Drive	AKD-■_ _ _ _ _		00607			00607			01207			
Voltage Req'd at Rated Output	Vac Input	VAC	480			480			480			
Peak Stall Torque (5) (Motor with AKD Servo Drive)	Tp Drive	N-m	144			250			550			
		lb-ft	106			184			406			

* Notes 1) Winding temperature = 155°C at continuous stall, at rated output, and for performance curves.
2) To calculate no-load Kt and Kb at 25°C, multiply by 1.064.
3) Back EMF is peak (not RMS).
4) TPR assumes motor is housed and mounted to a 12" x 12" x 3/4" heat sink or equivalent.
5) Peak torque may be limited by AKD Servo Drive current, see www.kollmorgen.com for complete drive ratings.