Innova Unity IoT 1-3k

USER MANUAL

Service and support:
Call your local service representative

SAFETY INSTRUCTIONS

SAVE THESE INSTRUCTIONS. This manual contains important instructions that should be followed during installation and maintenance of the UPS and batteries.

UPS Tower models are considered acceptable for use in the ambient of 0 ~ 45°C;

UPS RT models are considered acceptable for use in the ambient of 0 ~ 40°C;

Certification standards

- Safety: IEC/EN 62040-1
- EMC: IEC/EN 62040-2
- Performance: IEC/EN 62040-3.
- ISO 9001:2015.
- ISO 14001:2015.

Special symbols



RISK OF ELECTRIC SHOCK - Observe the warning associated with the risk of electric shock symbol.



Important instructions that must always be followed.



EU separate collection and lead content mark for lead acid batteries. Indicates that the battery must not be disposed of to the 'normal' household waste but be separately collected and recycled.



EU separate collection mark for waste electrical and electronic equipment (WEEE). Indicates that the item must not be disposed of to the 'normal' household waste but be separately collected and recycled.



Information, advice, help.



Refer to the user manual.

Safety of persons

- Dangerous voltage levels are present within the system. It should be opened exclusively by qualified service personnel.
- The system must be properly grounded.
- The battery supplied with the system contains small amounts of toxic materials. To avoid accidents, the directives listed below must be observed:
  - Servicing of batteries should be performed or supervised by personnel knowledgeable about batteries and the required precautions.

- Risk of explosion if battery is replaced by an incorrect type. When replacing batteries, replace with the same type and number of batteries or battery packs. Instructions shall carry sufficient information to enable the replacement of the battery with a suitable recommended type.
- **CAUTION:** Do not dispose of batteries in a fire. The batteries may explode. Dispose of used batteries according to the instructions.
- Do not open or mutilate batteries. Released electrolyte is harmful to the skin and eyes. It may be toxic.
- **CAUTION** – A battery can present a risk of electrical shock and high short circuit current. The following precautions should be observed when working on batteries:
  - Remove watches, rings, or other metal objects.
  - Use tools with insulated handles.
  - Wear rubber gloves and boots.
  - Do not lay tools or metal parts on top of batteries.
  - Disconnect charging source prior to connecting or disconnecting battery terminals.
  - Determine if battery is inadvertently grounded. If inadvertently grounded, remove source from ground. Contact with any part of a grounded battery can result in electrical shock. The likelihood of such shock can be reduced if such grounds are removed during installation and maintenance.
  - Failed batteries can reach temperatures that exceed the burn thresholds for touchable surfaces

Product safety

- The UPS connection instructions and operation described in the manual must be followed in the indicated order.
- UPS enclosure IP rating IP20.
- CAUTION - To reduce the risk of fire, the unit connects only to a circuit provided with branch circuit overcurrent protection for:
  20A rating, for Tower 3ks models, trip curve C .
  The upstream circuit breaker for Normal AC/Bypass AC must be easily accessible.
- for PERMANENTLY CONNECTED EQUIPMENT, a readily accessible disconnect device shall be incorporated external to the equipment
- for PLUGGABLE EQUIPMENT, the socket-outlet shall be installed near the equipment and shall be easily accessible
- Check that the indications on the rating plate correspond to your AC powered system and to the actual electrical consumption of all the equipment to be connected to the system.

- Never install the system near liquids or in an excessively damp environment.
- Never let a foreign body penetrate inside the system.
- Never block the ventilation grates of the system.
- Never expose the system to direct sunlight or source of heat.
- If the system must be stored prior to installation, storage must be in a dry place.
- The admissible storage temperature range is -25°C to +55°C without batteries, 0°C to +40°C with batteries, suggest to storage the battery below 25°C.
- This UPS can be used in TN/IT/TT power system

Special precautions

- The unit is heavy: wear safety shoes and use vacuum lifter preferentially for handling operations.
- All handling operations will require at least two people (unpacking, lifting, installation in rack system).
- Before and after the installation, if the UPS remains de-energized for a long period, the UPS must be energized for a period of 24 hours, at least once every 6 months (for a normal storage temperature less than 25°C). This charges the battery, thus avoiding possible irreversible damage.
- During the replacement of the Battery Module, it is imperative to use the same type and number of elements as the original Battery Module provided with the UPS to maintain an identical level of performance and safety.

This is a category C2 UPS product. In a residential environment, this product may cause radio interference, in which case the user may be required to take additional measures.

Contents

1 Introduction 1
1.1 Electronic equipment protection 1
1.2 Environmental protection 2
2 Product Overview 3
2.1 Weight and Dimension 3
2.2 Rear panels 5
3 Installation 9
3.1 Inspecting the equipment 9
3.2 Checking the accessory kit 9
3.3 Install the Unit 11
3.4 Connecting the EBM(s) 14
4 Operation 16
4.1 LCD panel 16
4.2 LCD description 17
4.3 Display functions 19
4.4 User settings 19
4.5 Starting the UPS with utility 20
4.6 Starting the UPS on Battery 21
4.7 UPS Shutdown 21
5 Communication 22
5.1 RS232 and USB 22
5.2 UPS remote control functions 22
5.3 IoT 23
5.4 Modbus TCP 24
5.5 Intelligent Card (Optional) 24
5.6 UPS Management Software 25
6 UPS maintenance 27
6.1 Equipment care 27
6.2 Transporting the UPS 27
6.3 Storing the equipment 27
6.4 Replacing batteries 27
6.5 Recycle 29
7 Troubleshooting 30
8 Specifications 32
8.1 UPS Block Diagram 32
8.2 UPS Specification 32

1 Introduction

Thank you for selecting Innova Unity IoT UPS to protect your electrical equipment.
We recommend that you take the time to read this manual to take full advantage of the many features of the UPS (Uninterruptible Power System).

Before installing the UPS, please read the booklet presenting the safety instructions. Then follow the indications in this manual.

1.1 Electronic equipment protection

The UPS protects your sensitive electronic equipment from the most common power problems, including power failures, power sags, power surges, brownouts, line noise, high voltage spikes, frequency variations, switching transients, and harmonic distortion.

Special characteristic:

- *Double converter with pure sine waveform output*
- *Full digital control*
- *Higher power density, and output PF = 1*
- *Wider input voltage range: 110Vac~300Vac*
- *Higher efficiency: 93% for 2K/3k, 89% for 1k*
- *Input THDI<5%*
- *Bigger charger current for long backup mode:8A, adjustable from 2A to 8A through LCD*
- *EBM quantity auto detection*
- *Communication ports: RPO, Dry in, Dry out, intelligent slot, USB, RS232*
- *IoT: Ethernet(default) and Wireless (Optional)*
- *Dot-matrix LCD, it supports Multi-Language*
- *ECO Mode*
- *Start-able without battery.*

1.2 Environmental protection

Products are developed according to an eco-design approach.

Substances

This product does not contain CFCs, HCFCs or asbestos.

Packing

To improve waste treatment and facilitate recycling, separate the various packing components.

- The cardboard we use comprises over 50% of recycled cardboard.
- Sacks and bags are made of polyethylene.
- Packing materials are recyclable.

Follow all local regulations for the disposal of packing materials.

Product

The product is mainly made up of recyclable materials.

Dismantling and disassembly must take place in compliance with all local regulations concerning waste. At the end of its service life, the product must be transported to recycling centers, re-use and treatment facilities for waste electrical and electronic equipment (WEEE).

Battery

The product contains lead-acid batteries that must be processed according to applicable local regulations concerning batteries.

The battery may be removed to comply with regulations and in view of correct disposal.

2 Product Overview

2.1 Weight and Dimension

The weights in this table is reference only, please see the labels on the carton for details.

Tower models：

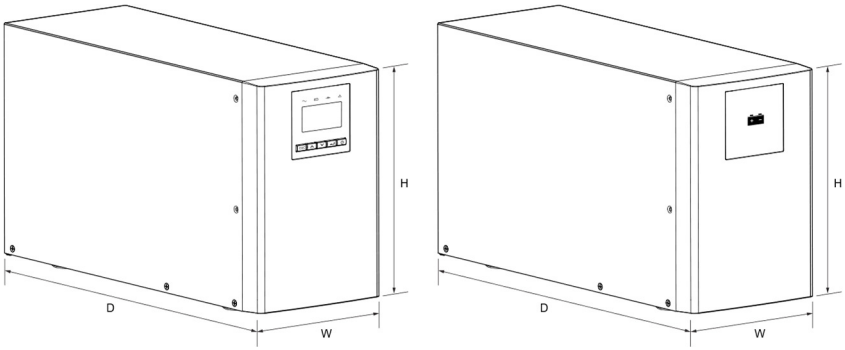

Description	Net Weights (kg)	Dimensions: D x W x H (mm)
Tower 1K	12.8	404 X 145 X 220
Tower 1KS	6.4	404 X 145 X 220
Tower 1.5K	14.3	404 X 145 X 220
Tower 1.5KS	6.7	404 X 145 X 220
Tower 2K	26.0	428 X 192 X 318
Tower 2KS	11.0	428 X 192 X 318
Tower 3K	26.4	428 X 192 X 318
Tower 3KS	11.4	428 X 192 X 318
Tower 36V EBM	16.8	404 X 145 X 220
Tower 72V EBM	38.7	428 X 192 X 318

RT models

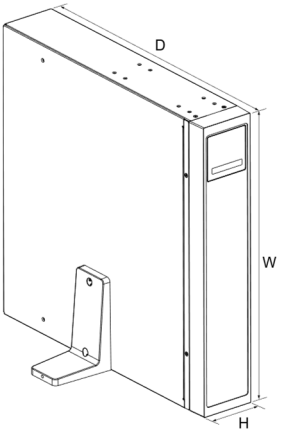

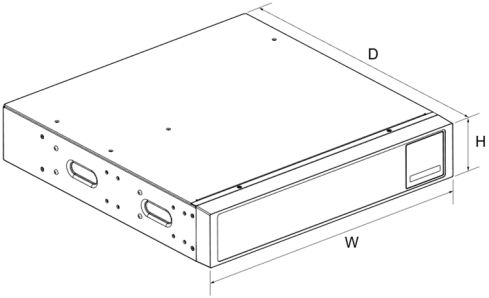

Description	Net Weights (kg)	Dimensions: D x W x H (mm)
RT 1K	14.3	445*438*85.5
RT 1KS	8.0	445*438*85.5
RT 1.5K	15.8	445*438*85.5
RT 1.5KS	8.2	445*438*85.5
RT 2K	23.3	600*438*85.5
RT 2KS	10.6	600*438*85.5
RT 3K	26.2	600*438*85.5
RT 3KS	11.0	600*438*85.5
RT 36V EBM	22.6	445*438*85.5
RT 72V EBM	39.9	600*438*85.5

2.2 Rear panels

Tower 1K/1KS/1.5K/1.5KS

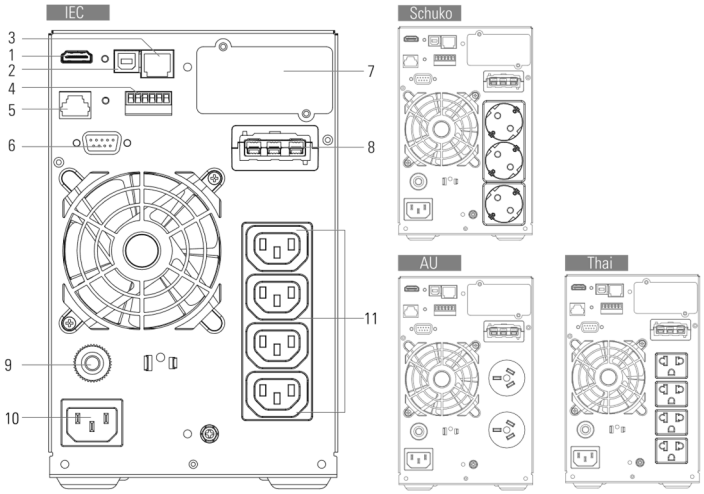

Tower 2K/2KS

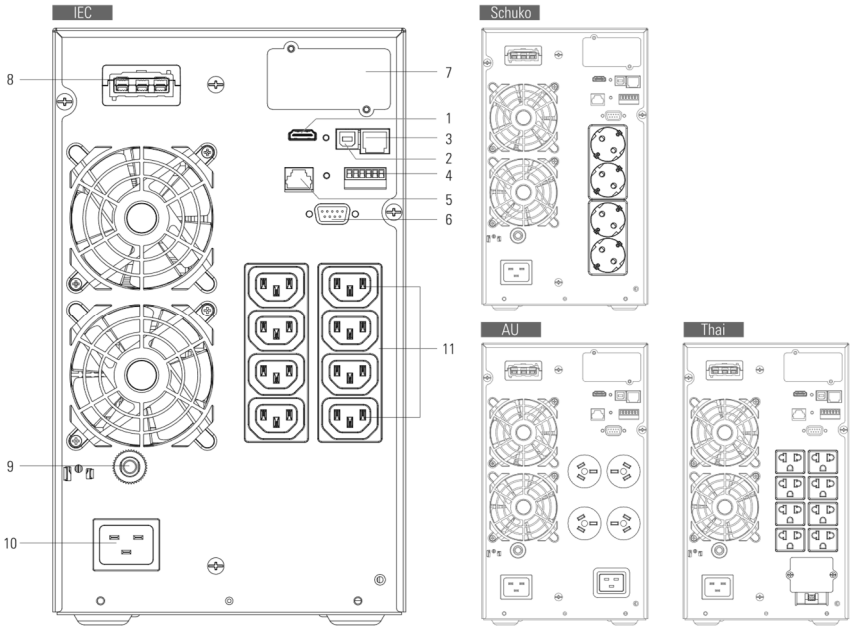

Tower 3K

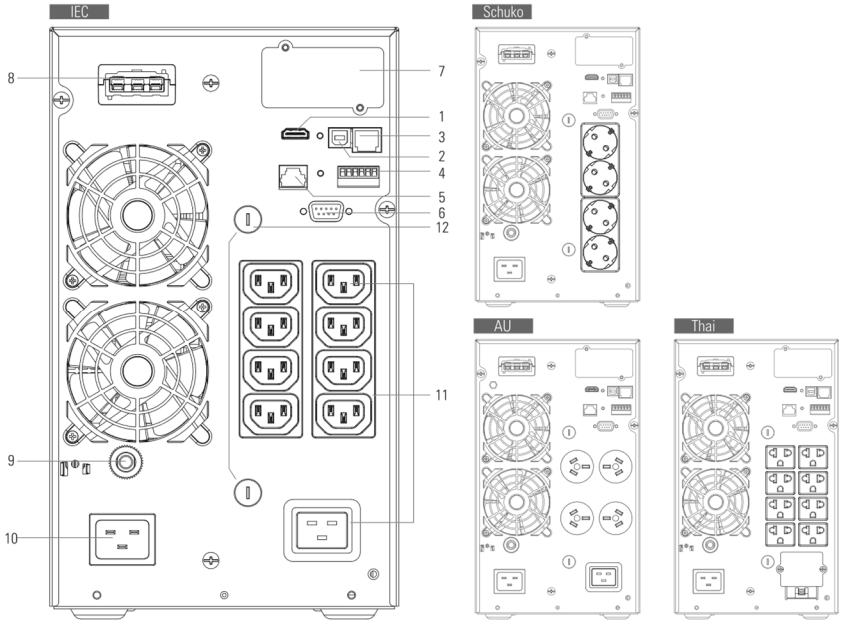

Tower 3KS

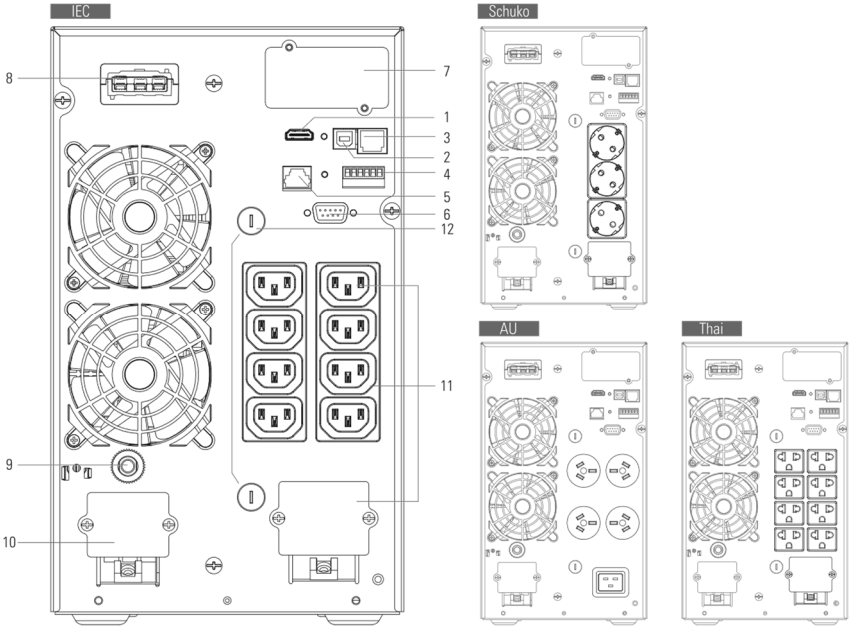

Tower EBM

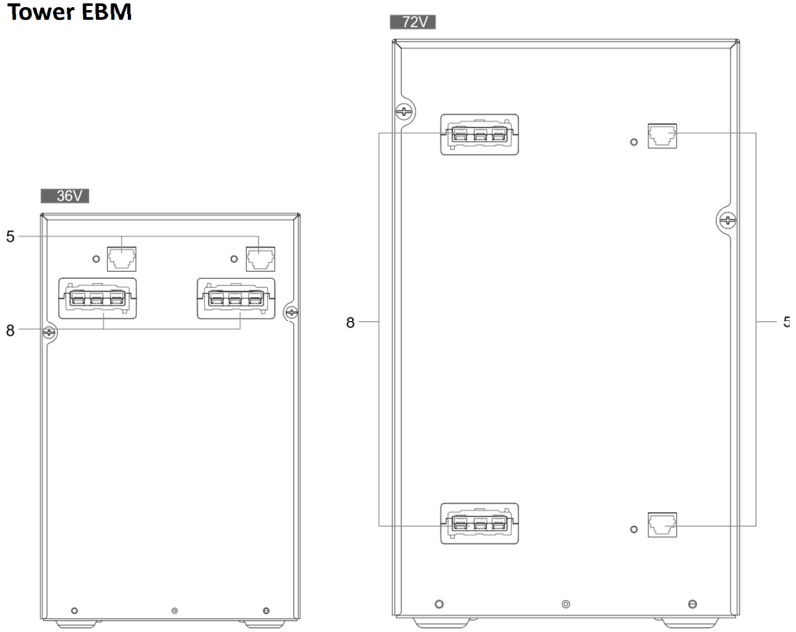

RT 1K/1KS/1.5k/1.5KS

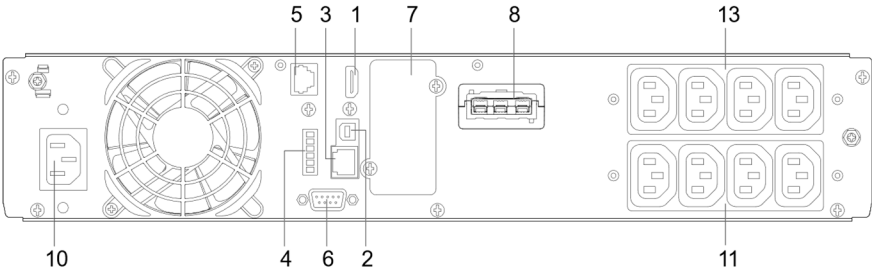

RT 2K/2KS

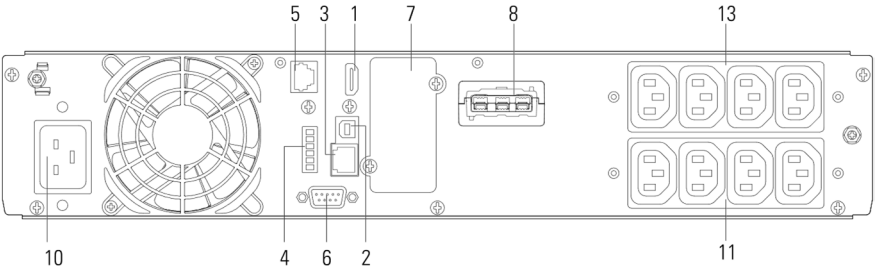

RT 3K/3KS

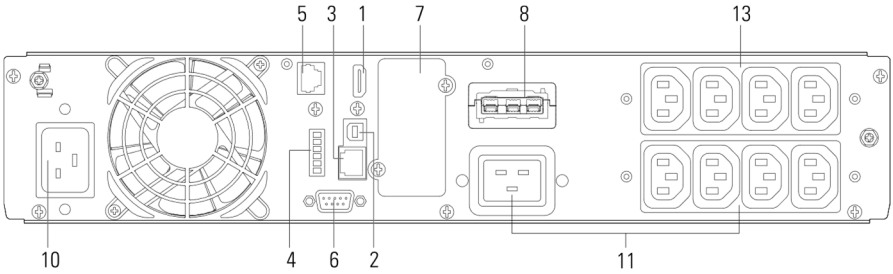

RT 36V EBM

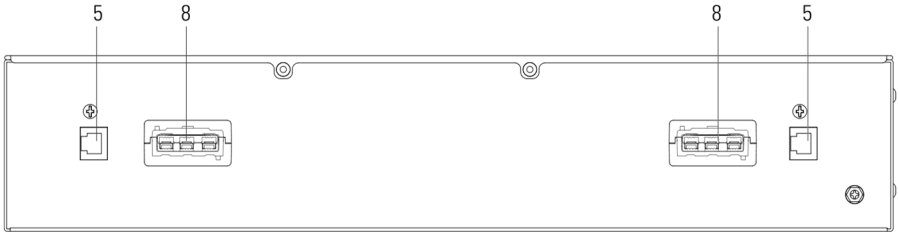

RT 72V EBM

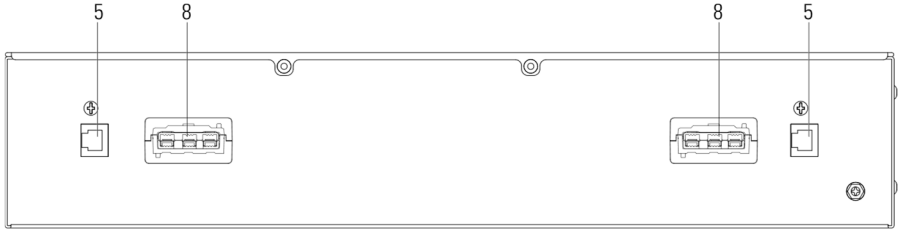

1	WLAN(HDMI)	2	USB	3	Ethernet (RJ45)
4	RPO/Dry in/Dry out	5	EBM auto detection	6	RS232
7	Slot Card Box	8	EBM Connector	9	Input Breaker(optional)
10	Input Socket/ Input Terminal	11	Output Socket/ Output Terminal	12	Output Fuse (optional)
13	Programmable Output Socket				

3 Installation

3.1 Inspecting the equipment

If any equipment has been damaged during shipment, keep the shipping cartons and packing materials for the carrier or place of purchase and file a claim for shipping damage. If you discover damage after acceptance, file a claim for concealed damage.

To file a claim for shipping damage or concealed damage:

1. File with the carrier within 15 days of receipt of the equipment;
2. Send a copy of the damage claim within 15 days to your service representative.

3.2 Checking the accessory kit

Tower model

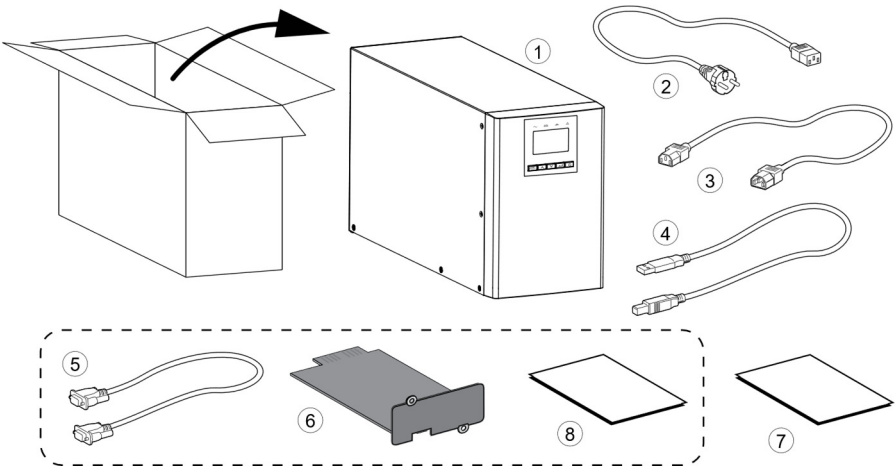

1	UPS	2	Input cable (Except for 3KS models)	3	Output cable (only for IEC models)
4	USB cable	5	RS232 cable(optional)	6	Slot card (optional)
7	User manual(English)	8	User manual (Multi-Language) (optional)		

RT model

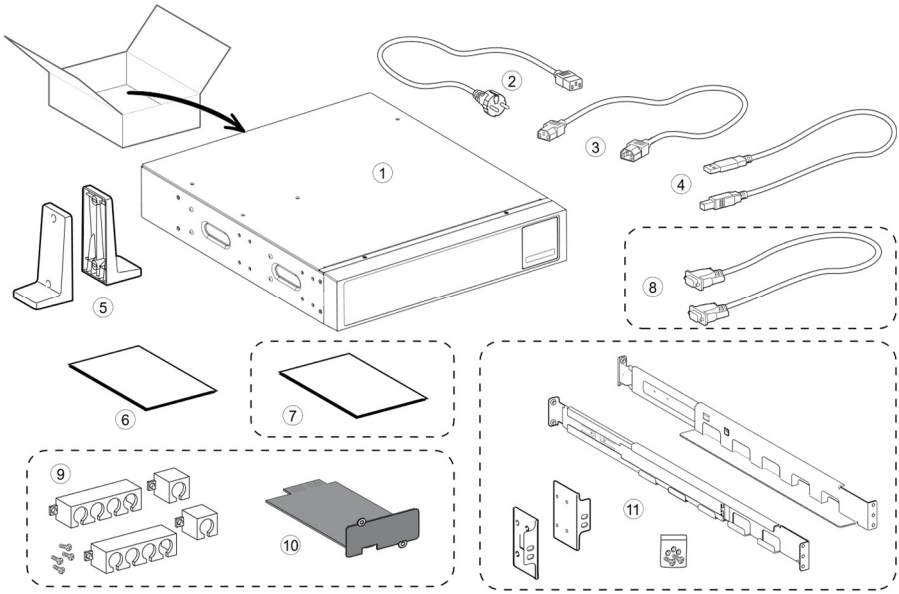

1	UPS	2	Input cable	3	Output cables
4	USB cable	5	Tower stands	6	User manual(English)
7	User manual (Multi-Language) (optional)			8	RS232 cable (optional)
9	Cable lockers (optional)	10	Slot card (optional)	11	Rail kit(optional)

3.3 Install the Unit

Always keep 200 mm of free space behind the UPS rear panel.

Check that the indications on the name plate located on the top cover of the UPS meets to the AC-power source and the true electrical consumption of the total load.

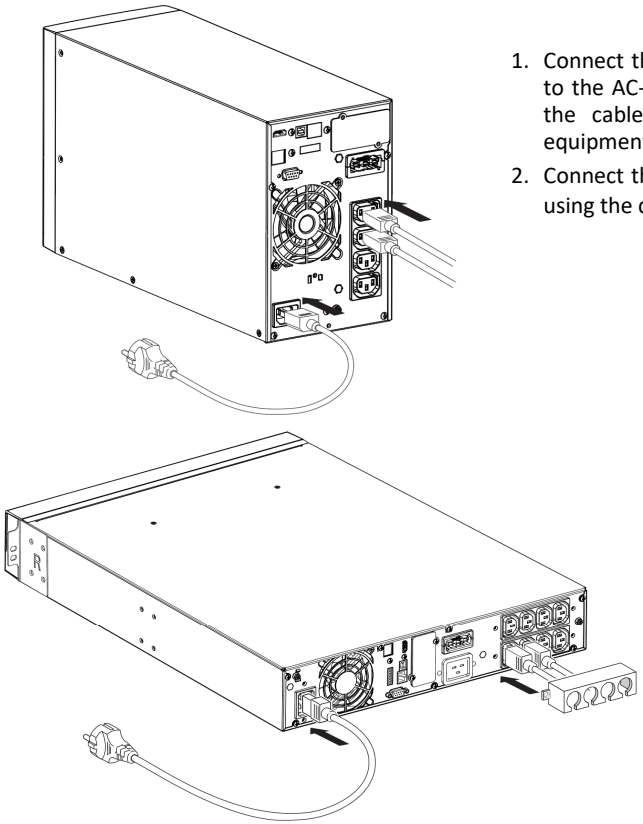

1. Connect the UPS input socket to the AC-power source using the cable of the protected equipment.
2. Connect the loads to the UPS using the cables.

Note: The UPS charges the battery as soon as it is connected to the AC-power source, even if button is not pressed.

Once the UPS is connected to the AC-power source, 8 hours of charging are required before the battery can supply the rated backup time.

- Recommended upstream protection

UPS model	Upstream circuit breaker
Tower 3KS	C curve-20A

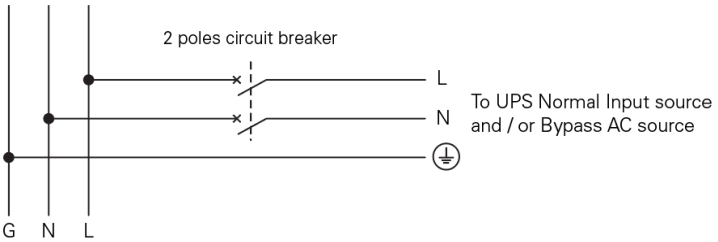

- **Input terminal and output terminal connection:**

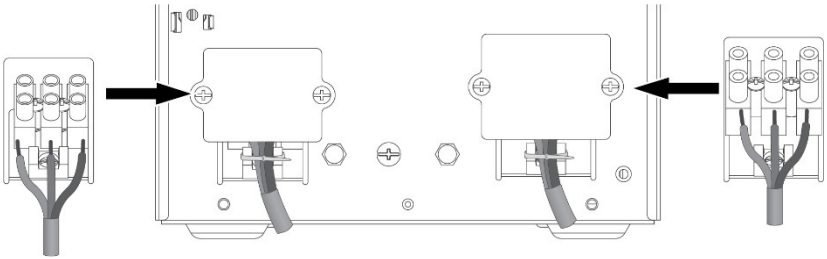

Tower 3KS	Minimum of section required/ Torque	Terminal-block capacity
Input L, N, G conductor cross section	2.5 mm²/(3Kgf-cm)	4 mm²
Output L, N, G conductor cross section	4 mm²/(8Kgf-cm)	10 mm²

Note: For Tower 3KS, the output cable should less than 3m.

When the cables connected to terminal block, the inner copper wire must not be exposed to avoid the risk of electric shock.

3.3.1 RT models

- **Rack installation**

Follow steps 1 to 4 for module mounting on the rails.

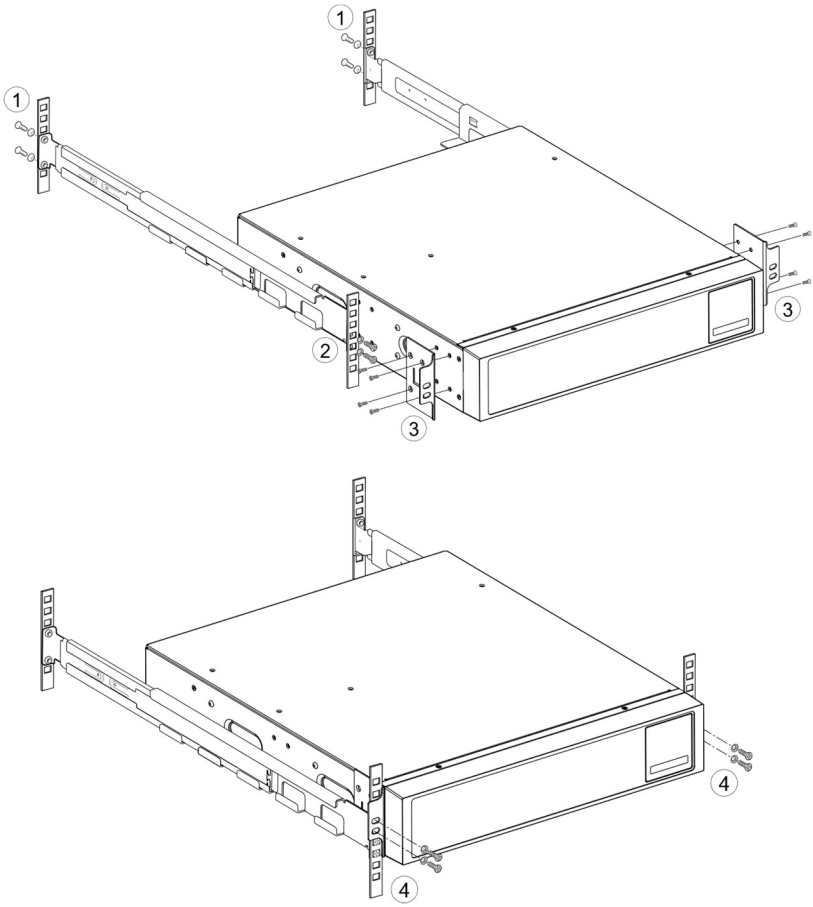

- **Tower installation**

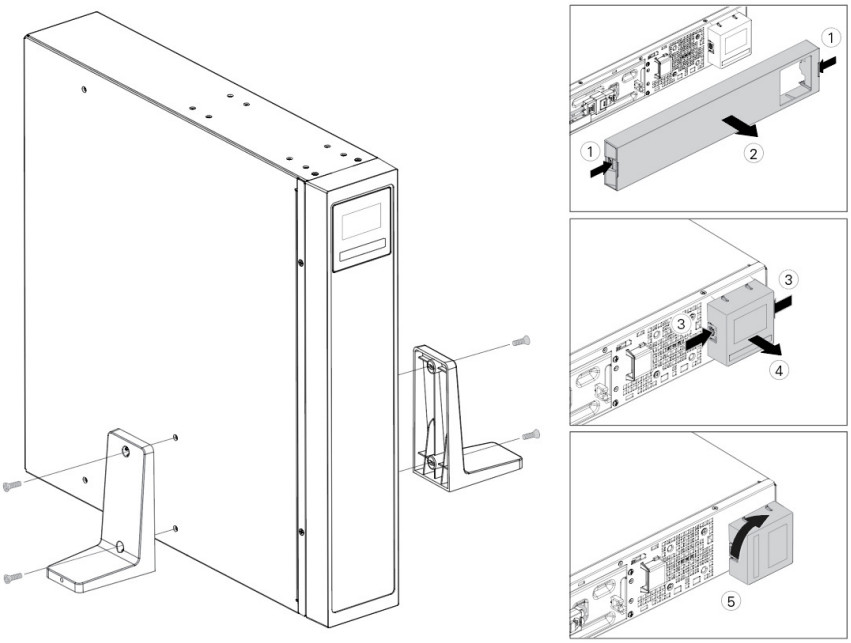

3.4 Connecting the EBM(s)

A small amount of arcing may occur when connecting an EBM to the UPS. This is normal and will not harm personnel.

Up to 4 EBMs can be connected to the UPS.

3.4.1 Tower models

1k/1.5k

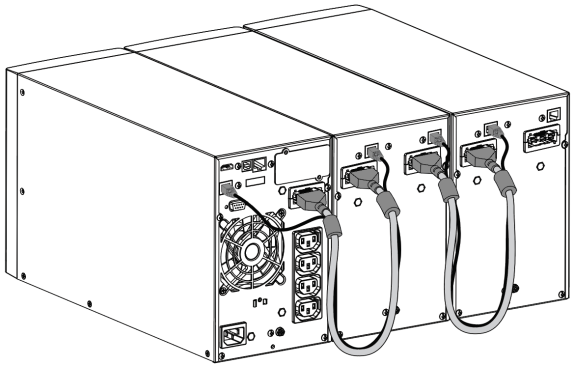

2k/3k

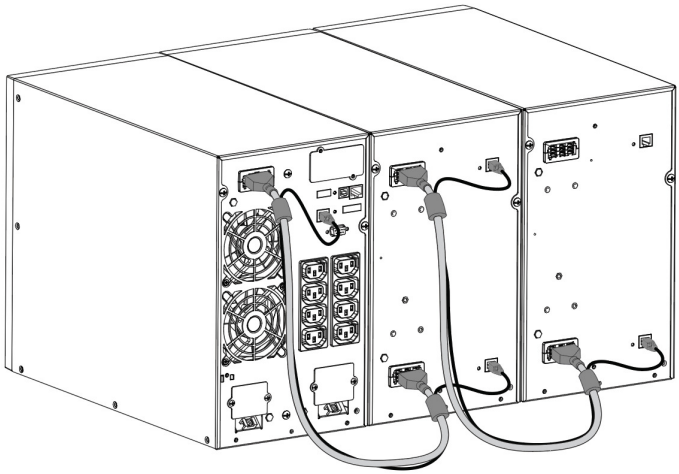

3.4.2 RT models

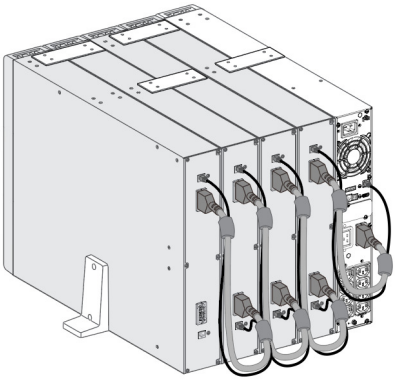

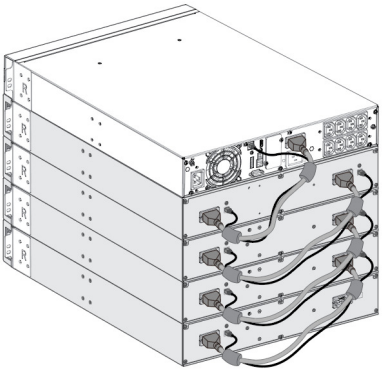

4 Operation

4.1 LCD panel

The UPS provides useful information about the UPS itself, load status, events, measurements and settings.

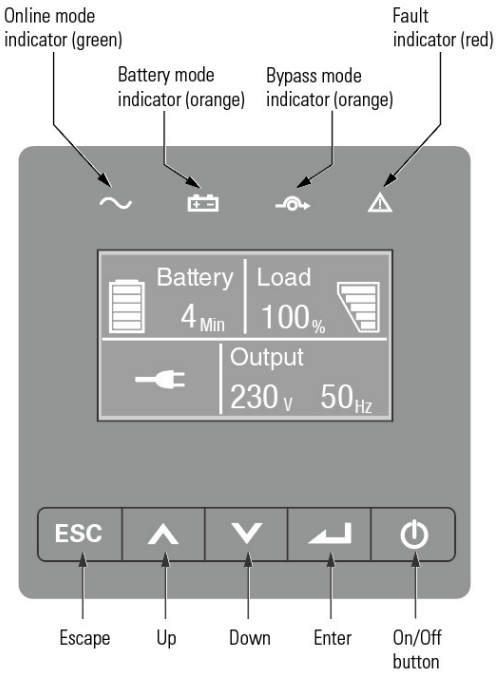

The following table shows the indicator status and description:

Indicator	Status	Description
~ Green	On	The UPS is operating normally on Online or on High Efficiency mode.
Yellow	On	The UPS is on Battery mode.
Yellow	On	The UPS is on Bypass mode.
Red	On	The UPS has an active alarm or fault. See Chapter 7 troubleshooting for additional information.

The following table shows the indicator status and description:

The button	Function	Illustration
	Power on	Press the Button for >100ms & < 1s can power on the UPS without utility input at the condition of battery connected
	Turn on	When the Unity is powered on, press the button for >1s can turn on the UPS
	Turn off	Press the button > 3s can turn off the UPS
	Scroll up	Press to Scroll up the menu option
	Scroll down	Press to Scroll down the menu option
	Enter menu	Select/Confirm the current selection
	Exit the present menu	Press to exit present menu to Main menu or the higher-level menu without changing a setting
	Mute buzzer	Press the button to mute the buzzer temporarily, once new warning or fault is active, buzzer will work again

4.2 LCD description

The LCD backlight automatically dims after 10 minutes of inactivity. Press any button to restore the screen.

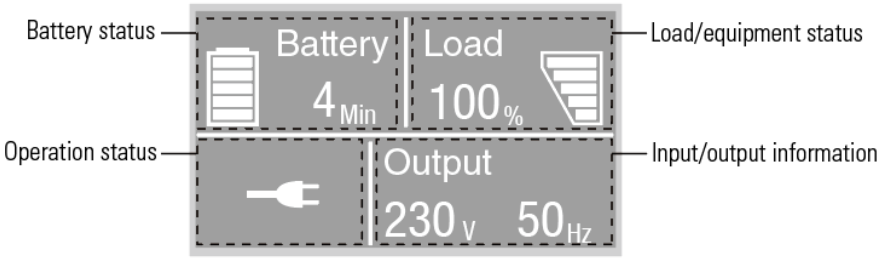

Operation status	Cause	Description
	Standby mode	The UPS is Off without output.
	Online mode	The UPS is operating normally and protecting the equipment.
 1 beep every 4 seconds	Battery mode	A utility failure has occurred, and the UPS is powering the equipment with battery. Prepare your equipment for shutdown.
 1 beep every 1 seconds	Battery mode with battery low	This warning is approximate, and the actual time to shutdown may vary significantly.
	High Efficiency mode	Once the mains are loss or abnormal, the UPS would transfer to Line mode or Battery mode and the load is supplied continuously.
	Converter mode	The UPS would free run with fixed output frequency (50Hz or 60Hz). The load should be derating to 60% in converter mode.
	Bypass mode	Overload or fault has occurred, or a command has been received, and the UPS is in Bypass mode.
	Battery test	UPS is executing a battery test
	Battery fail	The UPS detects bad battery or battery disconnected
	Overload	Some unnecessary loads should be cut off to reduce the load.
	Fault mode	Some fatal problems happened.

4.3 Display functions

When starting the UPS, the display is in the default UPS status summary screen.

Main menu	Submenu	Display information or Menu function
UPS status		UPS mode, IoT status, date/time, battery status and current alarms
Event log		Displays the events and faults stored
Measurements		[Load] W VA A P%, [Input/Output] V Hz, [Battery] % min V EBM, [DC Bus] V, [Temperature] C
Control	Go to Bypass	Transfers the UPS on Bypass mode
	Load segment	Load segment on/off
	Start battery test	Starts a manual battery test
	Reset fault state	Clear active fault
	Reset event list	Clear events and faults
	Reset com card	Reset com card inside UPS
	Restore factory settings	Restore to default factory settings
Settings		Refer to chapter 4.4 User settings
Identification		[Product name], [Serial number], [firmware version], [IP/MAC address]

4.4 User settings

Submenu	Available settings	Default settings
Password	Key the password (user can modify the password)	USER
Change language	English, Italiano, Français, Deutsch, Español, Русский, Polski, 简体中文	English
User password	[enabled, ****], [disabled]	enabled
Audible alarms	[enabled], [disabled]	enabled
Output voltage	[200V], [208V], [220V], [230V], [240V]	[230V] [240V] for AU
Output frequency	[autosensing], [converter 50Hz, 60Hz]	autosensing
High efficiency mode	[disabled], [enabled]	disabled
Auto bypass	[disabled], [enabled]	disabled
Start/Auto restart/Start from bypass	[disabled], [enabled]	Cold start/Auto restart: enabled Start from bypass: disabled
Site wiring fault	[enabled], [disabled]	disabled

Submenu	Available settings	Default settings
Overload pre-alarm	[50%~105%]	105%
External battery	[Auto detection], [Manual EBM: 0~4], [Manual Ah: 7~144Ah]	Auto detection 0 EBM
Charger current	[2A], [4A], [6A], [8A] for long backup model	4A
Dry in signal	[Disabled], [Remote on], [Remote off], [Forced bypass]	disabled
Dry out signal	[load powered], [on bat], [Low bat], [bat open], [bypass], [ups ok]	bypass
Ambient temperature alarm	[enabled], [disabled]	enabled
Battery remaining time	[enabled], [disabled]	enabled
Date and time	dd/mm/yyyy hh:mm	01/01/2020 00:00
LCD contrast	[-5 ~ +5]	[0]
IoT	[enabled], [disabled]	disabled
Modbus TCP	[enabled], [disabled]	disabled

If the load type is a transformer type, it is recommended to enable the “start from bypass” function.

4.5 Starting the UPS with utility

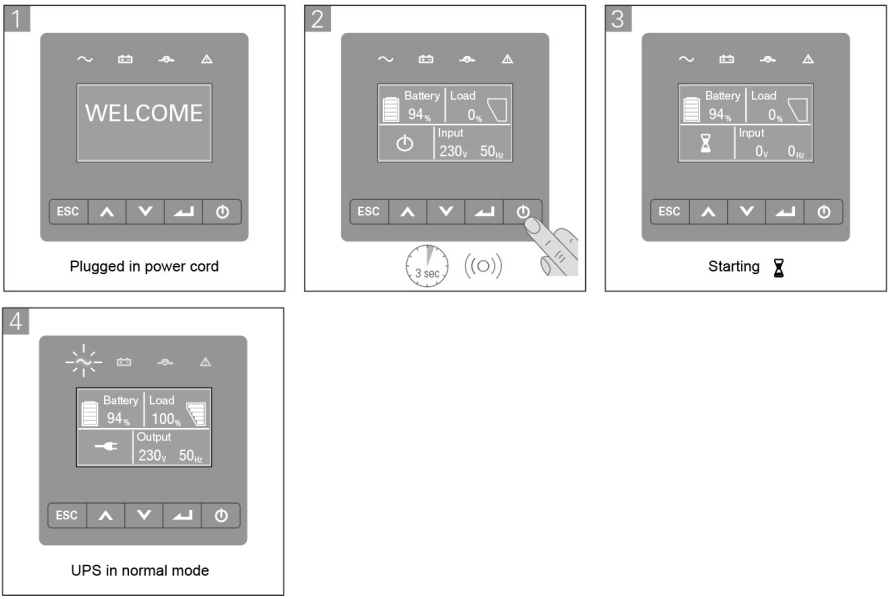

4.6 Starting the UPS on Battery

Before using this feature, the UPS must have been powered by utility power with output enabled at least once.

Battery start can be disabled. Refer to the Chapter *4.4 User setting*

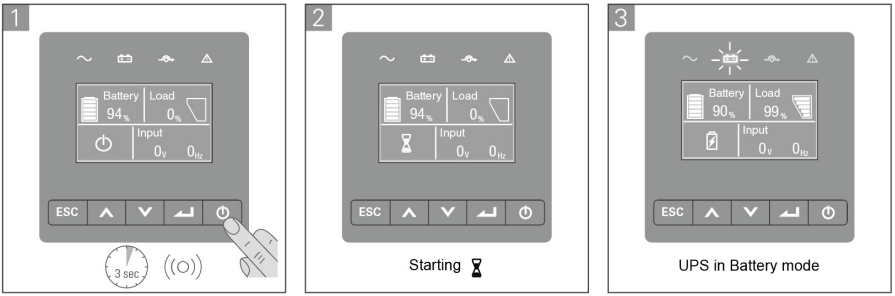

4.7 UPS Shutdown

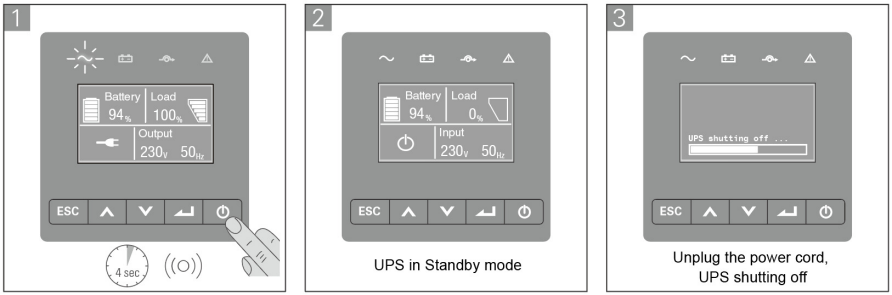

5 Communication

5.1 RS232 and USB

1. Communication cable to the serial or USB port on the computer.
2. Connect the other end of the communication cable to the RS232 or USB communication port on the UPS.

5.2 UPS remote control functions

- **Remote Power Off (RPO)**

When RPO is activated, UPS will cut off output immediately, and continues to alarm.

RPO	Comments
Connector type	16 AWG Maximum wires
External breaker specification	60 V DC/30 V AC 20 mA max

- **Dry in**

Dry in function can be configured (see Settings > Dry in)

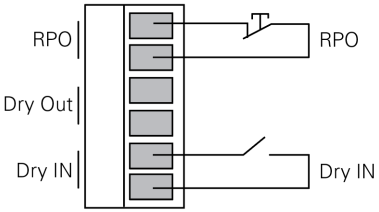

Dry in	Comments
Connector type	16 AWG Maximum wires
External breaker specification	60 V DC/30 V AC 20 mA max

- **Dry out**

Dry out is the relay out, dry out function can be configured (see Settings > Dry out)

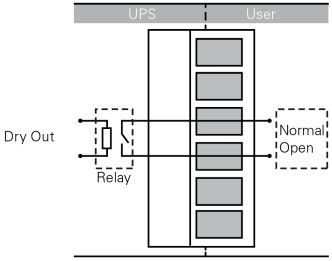

Dry out	Comments
Connector type	16 AWG Maximum wires
Inner Relay specification	24Vdc/1A

5.3 IoT

Built-in ethernet port and WLAN (optional accessary) port enable market-leading and easy-to-use IoT solutions for:

- Winpower View mobile app which allows you to remote monitor UPS(s) and keep informed about critical UPS event always.
- Remote report UPS faults and status (contact with your service for detail) from APP or registered APP account (Email address)
- Automatic UPS and battery warranty alert from APP or registered APP account (Email address)

IoT Connection

- **Wired connection**

1. Connect UPS and router or switch with network cable

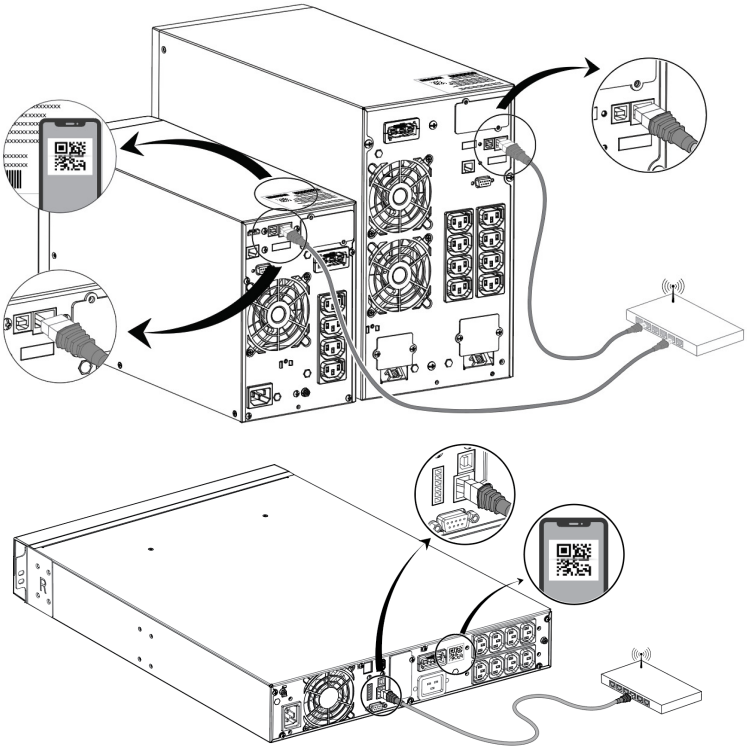

Please use CAT6 shielded network cable.

The Position of QR code on the UPS is for reference, subject to the actual UPS label.

Make sure your IT settings can access the public network and Microsoft Azure Cloud

2. Enable the IoT function in LCD (see Settings -> IoT)
3. Search the “WinPower View” from Google Play store or Apple APP store, downloading and installing.
4. Open the app, register an account, log in, follow the instructions of the app.
5. Tap ⊕ on the upper right corner, scan the SN barcode on UPS label to add device.

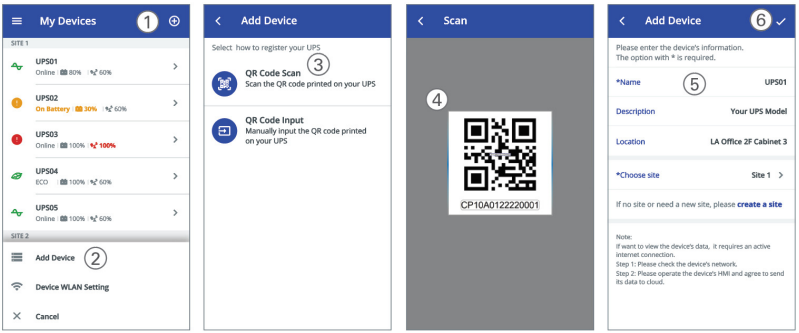

For more detail information and Q&A about the IoT and APP, please refer to the HELP menu in the app.

- **Wireless connection**
  The wireless module is optional, please contact your local distributor for details

5.4 Modbus TCP

Built-in ethernet port offers Modbus TCP feature to facilitate remote monitoring of the UPS into your own software. Contact with your service for protocol details.

5.5 Intelligent Card (Optional)

Intelligent Card allow the UPS to communicate with different types of devices in variety of networking environments. The Innova Unity IoT series could use the following connectivity cards, please contact your local distributor for details

- **NMC Card** - Ideal monitoring solution enables user to monitor and control the status of UPS on web browser via internet
- **CMC card** -provides connection to Modbus protocol with standard RS485 signal.
- **AS400 G2 card** - Provides voltage-free dry-contact signals for programmable controller and management system
- **EMP** - Supports temperature and humidity sensors for remote environment monitoring, should work with NMC Card

5.6 UPS Management Software

5.6.1 WinPower

WinPower provides user-friendly interface to monitor and control your UPS. This unique software provides safely auto shutdown for multi-computer systems while power failure. With this software, users can monitor and control any UPS on the same LAN no matter how far from the UPSs.

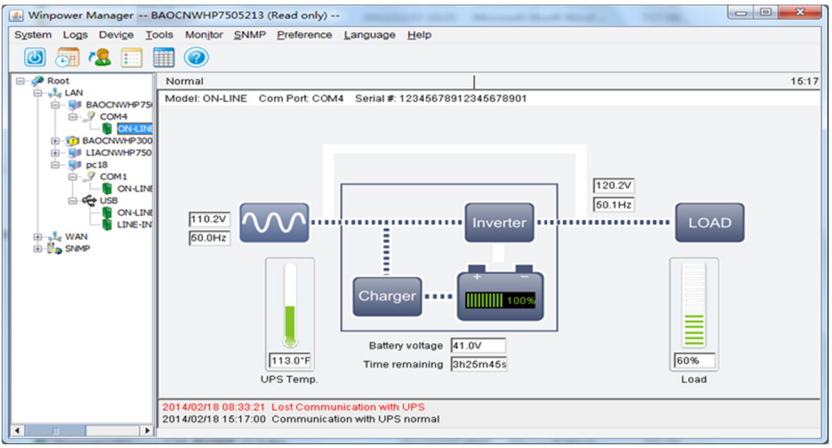

Installation procedure:

1. Go to the website: https://phoenixtecpower.com/content/phoenixtec/us/en-us/Support/Download.html
2. Choose the operation system you need and follow the instruction described on the website to download the software.
3. When downloading all required files from the internet, enter the serial No: **511C1-01220-0100-478DF2A** to install the software.

When you finish installation, restart your computer, the WinPower software will appear as a green plug icon located in the system tray, near the clock

5.6.2 WinPower View APP

WinPower View is a mobile app which allows you to centralized monitoring UPS(s) connected to cloud. Please download it from Google Play store or Apple APP store. Please refer to the chapter 5.3 for IoT connection.

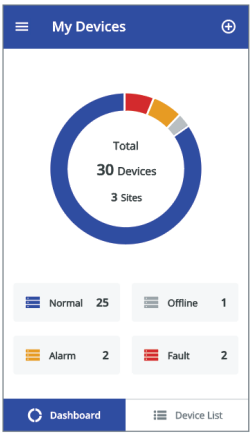

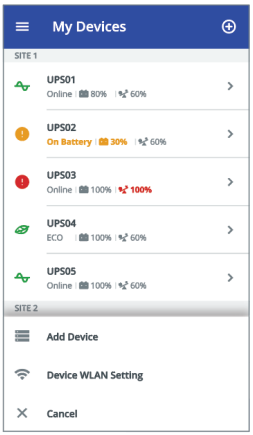

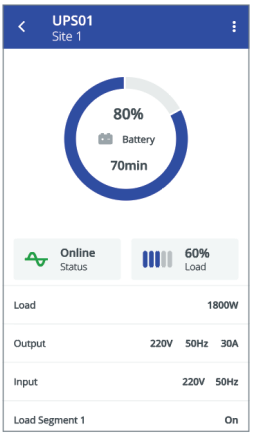

6 UPS maintenance

6.1 Equipment care

For the best preventive maintenance, keep the area around the equipment clean and dust free. If the atmosphere is very dusty, clean the outside of the system with a vacuum cleaner.

For full battery life, keep the equipment at an ambient temperature of 25°C (77°F).

The batteries are rated for a 3-5-year service life. The length of service life varies, depending on the frequency of usage and ambient temperature. Batteries used beyond expected service life will often have severely reduced runtimes. Replace batteries at least every 4 years to keep units running at peak efficiency.

6.2 Transporting the UPS

Please transport the UPS only in the original packaging. If the UPS requires any type of transportation, verify that the UPS is disconnected and turned off.

6.3 Storing the equipment

If you store the equipment for a long period, recharge the battery every 6 months by connecting the UPS to utility power. Recommends that the batteries charge for 48 hours after long-term storage.

If batteries were never recharged over 6 months, do not use them. Contact your service representative.

6.4 Replacing batteries

DO NOT DISCONNECT the batteries while the UPS is in Battery mode.

Consider all warnings, cautions, and notes before replacing batteries.

- Servicing should be performed by qualified service personnel with knowledgeable of batteries and required precautions. Keep unauthorized personnel away from batteries.

- **Replacing the internal battery(For RT)**

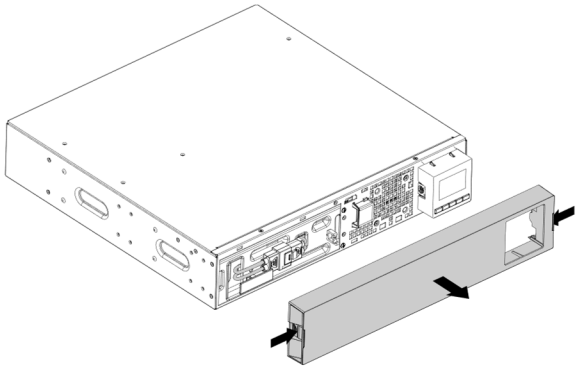

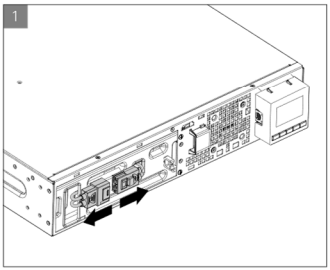

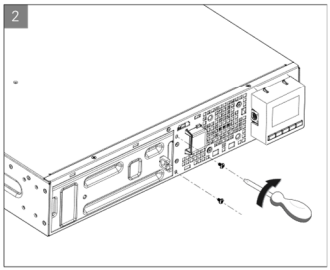

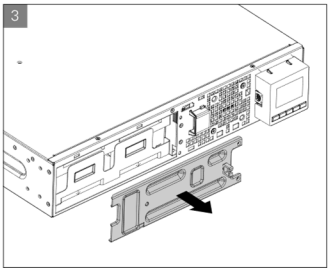

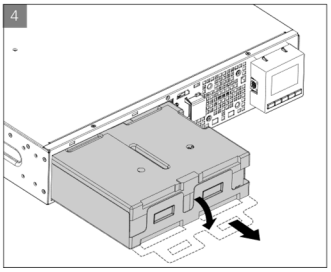

1. Put the new battery pack into the UPS.
2. Screw back the metal protection covers and the front panel.
3. Testing new batteries.

Verify that the replacement batteries have the same rating and brand as the batteries being replaced

6.5 Recycle

Contact your local recycling or hazardous waste center for information on proper disposal of the used equipment.



Do not dispose of the batteries in the fire. Which may cause battery explosion. The batteries must be rightly disposed according to local regulation.

Do not open or destroy the batteries. Escaping electrolyte can cause injury to the skin and eyes. It may be toxic.



Do not discard the batteries in the trash.

Pb

This product contains sealed lead acid batteries and must be disposed as it's explained in this manual. For more information, contact your local recycling centers, re-use and treatment facilities.



The crossed-out wheeled bin symbol indicates that waste electrical and electronic equipment should not be discarded together with unseparated household waste but must be collected separately. The product should be handed in for recycling in accordance with the local environmental regulations for waste disposal.

By separating waste electrical and electronic equipment, you will help reduce the volume of waste sent for incineration or land-fills and minimize any potential negative impact on human health and environment.

7 Troubleshooting

Typical alarms and faults:

To check the UPS status and Event log:

1. Press any button on the front panel display to activate the menu options.
2. Press the button to select Event log.
3. Scroll through the listed events and faults.

The following table describes typical conditions.

Conditions	Possible cause	Action
Battery mode  LED is On. 1 beep every 4 seconds.	A utility failure has occurred, and the UPS is in Battery mode.	The UPS is powering the equipment with battery power. Prepare your equipment for shutdown.
Battery low  LED is On. 1 beep every second.	The UPS is in Battery mode and the battery is running low.	This warning is approximate, and the actual time to shutdown may vary significantly.
No battery  LED is On. Beep continuous.	The batteries are disconnected.	1. Verify that all batteries and detective cable (RJ45) are properly connected. 2. Check the LCD menu: Settings – External battery. If select the “Manual EBM” and Value is 0, please set the right value.
Battery fault  LED is On. Beep continuous.	The battery test is failed due to bad or disconnected batteries, or the battery minimum voltage is reached in OBM cycling mode.	Verify that all batteries are properly connected. Start a new battery test: if the condition persists, contact your service representative.
The UPS does not provide the expected backup time.	The batteries need charging or service.	Apply utility power for 48 hours to charge the batteries. If the condition persists, contact your service representative.

Conditions	Possible cause	Action
Bypass mode  LED is on.	An overload or a fault has occurred, or a command has been received and the UPS is in Bypass mode. Or auto bypass function is enabled.	Equipment is powered but not protected by the UPS. Check for one of the following alarms: overtemperature, overload, UPS failure or auto bypass setting.
Power overload  LED is On. 1 beep every second.	Power requirements exceed the UPS capacity (greater than 105% of nominal;	Remove some of the equipment from the UPS. The alarm resets when the condition becomes inactive.
over temperature warning  LED is On. 1 beep every second.	The UPS internal temperature is too high. At the warning level, the UPS generates the alarm but remains in the current operating state.	Clear vents and remove any heat sources. Ensure the airflow around the UPS is not restricted.
The UPS does not start.	The input source is not connected correctly.	Check the input connections.
	The Remote Power Off (RPO) switch is active or the RPO connector is missing.	If the UPS Status menu displays the "Remote Power Off" notice, inactivate the RPO input.
Emergency power off	RPO is active	1.Check the RPO connector status 2.Reset the RPO fault through LCD. Main menu – Control - Reset fault state.
Fan fault	Fan abnormal	Check if the fan is running normally
Site fault	Phase and neutral conductor at input of UPS system are reversed	Site Fault detection disabled by default. It can still be enabled / disabled from the LCD settings menu. Reconnect all input wires.
Over temperature fault	Over temperature is too high, UPS goes to bypass or stopped.	Check the ventilation of the UPS and check the ambient temperature.
Output short circuit	Output short circuit occurred	Check the output of UPS and loads, make sure the short circuit is removed before turning on again.
APP cannot connect to UPS	IoT is disabled	Enable IoT function in LCD
	Your IT settings may block UPS get cloud connected (NTP, Proxy, etc.)	please refer to WinpowerView app help file

8 Specifications

8.1 UPS Block Diagram

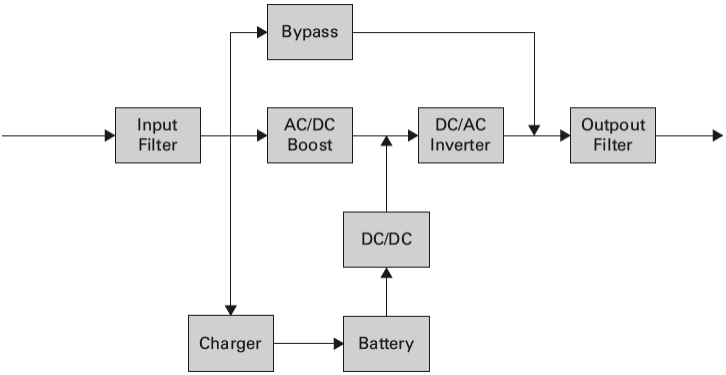

8.2 UPS Specification

Model name		1K	1KS	1.5K	1.5KS	2K	2KS	3K	3KS
Power rating	VA/Watt	1000VA/1000W		1500VA/1500W		2000VA/2000W		3000VA/3000W	
Efficiency	Line mode	89%				93%			
	ECO mode	96%		97%					
Input performance	Voltage range	160-300V 100% load, 110-160V derating to 50% load linearly							
	Rated frequency	50Hz/60Hz							
	Frequency range	40Hz-70Hz (45Hz-55Hz, 54Hz-66Hz @ load>60%)							
	PF	>0.99							
	THDI	<5%							
Input connection	Socket (RT)	1x IEC C14				1x IEC C20			
	Socket (Tower)	1x IEC C14				1x IEC C20		1x Terminal	
Output performance	Rated voltage	200/208/220/230/240 VAC (derating 10% at 208V, derating 20% at 200V)							
	Rated frequency	50Hz/60Hz							
	Maximum PF	PF = 1							
	Voltage accuracy	±1%							
	THDv	<1% linear load; <5% nonlinear load							
	Transfer time	0ms@line <-> battery; 4ms @ line <-> bypass; 10ms @ ECO <->Inverter							
	Crest Ratio	Max 3:1							
	Overload	100%<load≤105% continuous. 105%< load ≤125% for 5 minutes 125<load≤150% for 30 seconds. >150% for 500ms.							

Model name		1K	1KS	1.5K	1.5KS	2K	2KS	3K	3KS
Output connection	Socket (RT)	1 main outlet group (with 4 x IEC C13) 1 programmable outlet group (with 4 x IEC C13)						1 main outlet group (with 1 x IEC C19 + 4 x IEC C13) 1 programmable outlet group (with 4 x IEC C13)	
	Socket (Tower IEC)	4 x IEC C13				8 x IEC C13		8 x IEC C13 1x IEC C19	8 x IEC C13 1x Terminal
	Socket (Tower Schuko)	3 x Schuko				4 x Schuko			3 x Schuko 1x Terminal
	Socket (Tower Thai)	4 x Thai				8 x Thai + 1x Terminal			
	Socket (Tower AU)	2 x AU				4 x AU + 1 x IEC C19			
	Load segment control	**RT:** Yes, 1 programmable load segment control **Tower:** NA							
Short-circuit current (RMS) /protect time	Bypass mode	550A/2.8ms		550A/2.8ms		699A/7ms		699A/7ms	
	Normal/Battery mode	20A/100ms		25A/100ms		36A/100ms		54A/100ms	
Battery	Voltage	36V	36VDC	36VDC	36VDC	72V	72VDC	72VDC	72VDC
	Capacity (AH)	3 x 12V 7Ah	NA	3 x 12V 9Ah	NA	6 x 12V 7Ah	NA	6 X12V 9Ah	NA
Maximum EBM quantity		4							
EBM auto detection		Yes							
Battery Hot swappable		Yes							
Charger	Charging method	Optimize Battery Management							
	Charging current	1.5A	8A	1.5A	8A	1.5A	8A	1.5A	8A
	Recharging time	3h to 90%	NA	3h to 90%	NA	3h to 90%	NA	3h to 90%	NA
Other mode	CVCF	Yes (derating to 60% load)							
HMI	Display	Dot matrix LCD (optional segment LCD)							
	Language	Multi-Language							
	USB	USB 2.0 with HID power device							
	RS232	Yes (DB9)							
	Dry in/out	1 programmable dry in; 1 programmable dry out							
	RPO	Yes							
	Intelligent slot	Yes (for long card)							
	Network card	Optional, NMC long card							
	Modbus card	Optional, CMC Long Card							
	Dry contactor card	Optional, AS400 Long Card							
	Wireless module	Optional							
	IOT Ethernet port	RJ45							
	Monitor software	Winpower, Winpower View APP							
Physical performance	Dimension (W*D*H) mm	**RT:** 438*445*85.5(2U) **Tower:** 145*404*220				**RT:** 438*600*85.5(2U) **Tower:** 192*428*318			
	IP protection level	IP20							
	Plug solid	**RT:** Optional; **Tower:** NA							
	Wheel	No							

Model name		1K	1KS	1.5K	1.5KS	2K	2KS	3K	3KS
Environment	Operating temperature	**RT:** 0-40°C **Tower:** 0-45°C, 40-45°C derating to 80%							
	Relative Humidity	0-95%							
	Operating Altitude	0~3000m（the load derating 1 % every up 100m @1000~3000m）							
	Acoustic Noise	<45dB at front 1m				<50dB at front 1m			
Certification		CE, IEC/EN 62040							
EMI	Conduction /Radiation	C2							
EMS	ESD	IEC/EN 61000-4-2							
	RS	IEC/EN 61000-4-3							
	EFT	IEC/EN 61000-4-4							
	Surge	IEC/EN 61000-4-5							
Accessory	Input power cable	Yes							
	Output power cable	Yes (For IEC models)							
	EBM cable	Yes (in EBM)							
	USB cable	Yes							
	RS232 cable	Optional							
	Rail kit	Optional							
	Tower Feet	**RT:** Yes; **Tower:** No							
	Rack ear	**RT:** Yes; **Tower:** No							
	Manual (English)	Yes							