GRADEN®
INDUSTRIES

GSR-1200
GREENS ROLLER

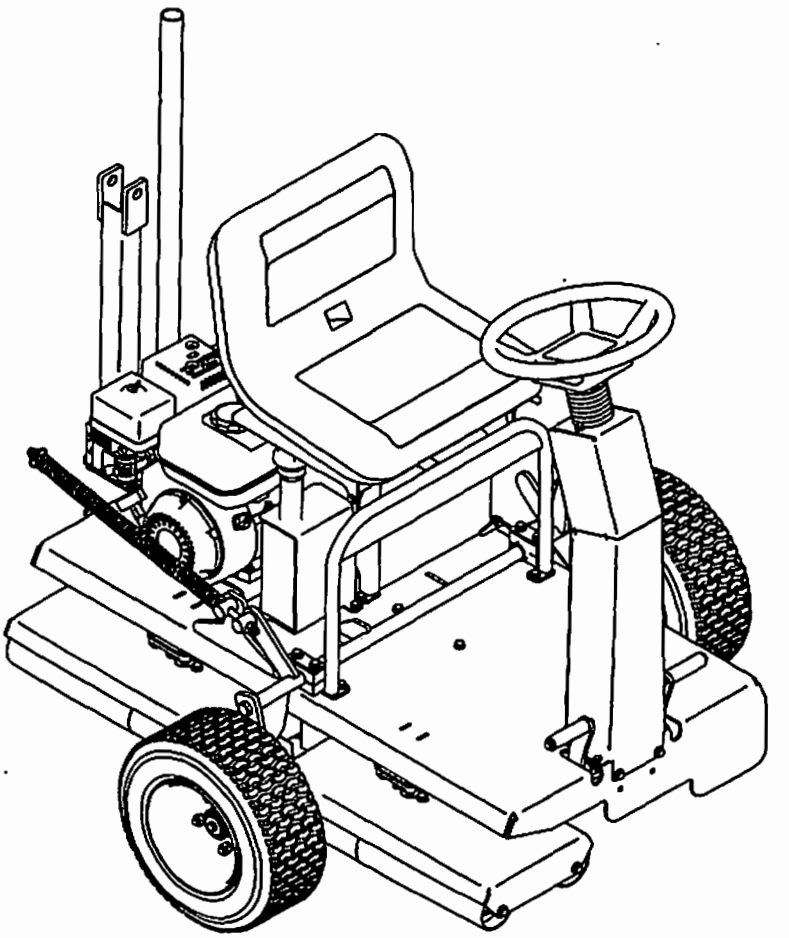

Owner's Manual

SINCE 1979
precisionusa.com
YOUR GOLF COURSE SUPERMARKET
800-345-1960

Graden Industries Pty. Ltd.
26-28 Scammel Street, Campbellfield
Victoria, AUSTRALIA 3061
Phone : (03) 9305 3400
Fax : (03) 9305 3995
International Phone : (613) 9305 3400
Email : sales@graden.com.au
Website : www.graden.com.au

Doc. #035-GSR-H-1200-WW

Issue Date: 18/4/2006

Table of Contents

1. **Specifications**
   - 1.1 Specifications
   - 1.2 Statement of Machine Use
   - 1.3 Serial Number Plate

2. **To the Owner**
   - 2.1 Preliminary Instructions
   - 2.2 Warning Symbols
   - 2.3 Servicing the GSR-1200

3. **Safety Information**
   - 3.1 General Rules
   - 3.2 Training
   - 3.3 Personal Protective Equipment (PPE)
   - 3.4 Preparation
   - 3.5 Operational Safety
   - 3.6 Maintenance Safety

4. **Controls**
   - 4.1 Steering Wheel
   - 4.2 Motion Pedals
   - 4.3 Lifting Bar
   - 4.4 Tow Bar
   - 4.5 Seat Adjustment
   - 4.6 Engine Controls

5. **Operating Instructions**
   - 5.1 Preliminary Checks
   - 5.2 Start Up
   - 5.3 Driving (Traversing) the Greens Roller
   - 5.4 Shut Down

6. **Maintenance Operations**
   - 6.1 Adjustments and Settings
     - 6.1.1 Drive Chain
   - 6.2 Engine Maintenance
   - 6.3 Maintenance Schedule

7. **Warranty**

8. **Diagrams**

1.1 Specifications

Model	Graden GSR-1200 Greens Roller
Engine	Honda GX200
Power	6.5hp Horizontal shaft
Engine Oil	SAE 10W-30 Grade
Fuel	Unleaded
Transmission	Hydrogear BDR-317
Transmission Oil	SuperySyn Engine Oil 5W-40
Drive	Twin Chain to rear Drive Roller
Drive Roller	165mm Diameter Vulcanized Rubber Coated
Smoothing Rollers	89mm Diameter – 4 Split Rollers Overlapping twin steering heads
Rolling Swathe	1200mm
Weight	240 kg
Length	1360mm
Width	1220mm
Height	1070mm
Lifting Tyres	16 x 6.50 - 8
Lifting Tyre Pressure	65 kPa (10 psi) - maximum
Seat	Hi-Back, adjustable
Maximum Speed	10kmh

1.2 Statement of Machine Use

The Graden GSR-1200 Greens Rollers main use is as a rolling tool on areas such as golf courses, bowling greens, tennis courts and other sporting fields and fine turf areas.

It is not for use on turf areas where rocks and other hard foreign bodies may be present. The use of this machine in turf profiles of this nature will likely cause premature wear of the drive and smoothing rollers.

This machine is not for use in anything other than the soil profiles typically to be found on sporting fields and fine turf areas mentioned above.

Please contact Graden Industries if you are unsure about your application complying with the intended use of this machine.

1.3 Serial Number Plate

The serial number plate layout is shown below. It is important to note in particular the Model and Serial numbers to assist you when ordering parts or discussing servicing needs with your Graden Dealer. Also on the plate you will find mass information and the year of manufacture.

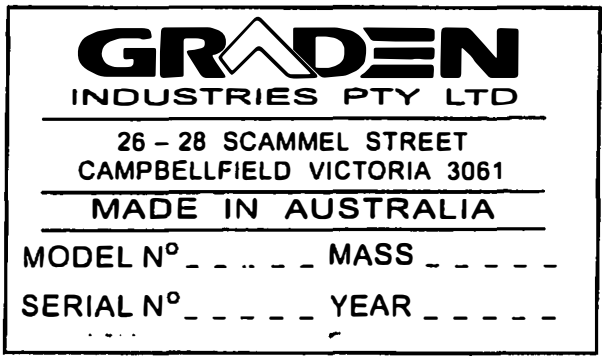

2. To the Owner

Read this manual before operating the Roller

2.1 Preliminary Instructions

- **It is important that the owner completely familiarises themselves with the contents of this manual**
- **Keep this manual at hand as a ready reference for anybody using the Graden GSR-1200 Greens Roller**
- **The designed and tested safety features of this machine are dependent on it being operated within the limitations described in this manual**

2.2 Warning Symbols

Throughout this manual the following symbols are used to indicate important safety issues. When either or both of these symbols are present the operator must be aware that there is the potential to damage equipment and/or incur serious personal injury.

WARNING
This symbol denotes a potential equipment hazard: failing to follow the instructions or procedures may result in equipment malfunction or damage.

DANGER
This symbol denotes a serious personal safety hazard: failing to follow the instructions or procedures may result in serious, or even fatal, injury.

2.3 Servicing the Graden GSR-1200 Greens Roller

The Graden GSR-1200 has been carefully engineered and manufactured to provide safe, dependable and effective service.

As with all mechanical equipment it requires routine cleaning and maintenance.

Your authorised Graden representative has access to tools, genuine spares and equipment to service any and all of your requirements.

Use only genuine Graden parts; substitute parts will void the warranty and may not meet the safety and performance standards required for safe and effective operation of the Roller.

Please record the model and serial numbers of the Roller in the space provided below and quote this information when ordering parts or communicating with Graden Industries or its' approved representatives.

Model Number : _____

Serial Number : _____

Date Purchased : _____

3. Safety Information

This manual is provided to help you operate and maintain the Greens Roller. Please read it carefully.

It has been compiled from extensive field experience and engineering data.

In some aspects it is generalised because it is impossible to cover all operating scenarios. However, combining the information provided in this manual with your own increasing experience and knowledge of the Greens Roller will enable you to develop procedures suitable for your individual needs.

This machine, like most modern machinery, is constantly undergoing development on the basis of experience and market needs. At the time of printing, material in this manual was current but may vary due to the aforementioned ongoing development.

Graden Industries reserve the right to change the machinery specifications without notice.

3.1 General Rules

- Direction on the machine (right or left) is determined from the seated position.
- Where numbers in brackets are listed in this manual they refer to the part numbers shown on the diagrams and are listed to assist in part identification.
- Do not allow children to operate the machine or be near it during its' operation.
- Only people who are very familiar with the rules of safe operation should be allowed to use this machine.
- Only use the machine during daylight or in good artificial light.
- Some illustrations in this manual may show the Roller with safety guards removed; this is not a normal situation!

☠ DANGER ☠
Never operate the Roller with any of the covers or safety guards removed or not properly secured.

3.2 Training

WARNING
Read this manual completely before beginning how to learn to use the Roller.

- Do not allow anybody to operate the machine without instruction
- Know your controls and how to stop the machine and shut down the engine quickly in an emergency
- To maintain control and reduce the possibility of upset, damage or collision, operate the machine smoothly. Avoid erratic operation and excessive speed

WARNING
Stay alert for holes, ditches or obstacles that might obstruct the unit or cause it to tip over.

- Be aware of the hazards associated with the engine:
  - ⇒ Petrol is highly flammable so only use an appropriate container
  - ⇒ Never remove the fuel cap or add fuel while the engine is running or still hot
  - ⇒ Never add fuel indoors and wipe up any spillages
  - ⇒ Never run the engine in an enclosed area because exhaust gases are toxic

DANGER
The engine uses highly flammable petroleum fuel and produces toxic exhaust gases. Only add fuel to, or run, the engine in the open - never indoors.

3.3 Personal Protective Equipment (PPE)

- Clothing should be reasonably snug fitting and not free flowing so as to avoid the risk of entanglement in moving parts
- Wear sturdy footwear, preferably steel capped safety shoes or boots
- Use appropriate PPE for eyes, ears and hands

☠ DANGER ☠
Never wear sandals, sneakers or have bare feet when operating the Roller.

3.4 Preparation

- Ensure all safety warnings and decals are in place and legible
- Remove any accumulated debris that might represent a fire hazard
- Perform any appropriate scheduled maintenance before starting the machine

3.5 Operational Safety

- Always repair any damage before recommencing operation

☠ DANGER ☠
Always stop the engine in any of the following situations : • **leaving the machine unattended** • **attempting to unclog or clear the rollers of obstructions** • **making any repairs or adjustments** • **inspecting the unit for damage after striking any foreign object**

3.6 Maintenance Safety

☠ DANGER ☠
Always turn off engine before carrying out any maintenance or servicing.

- Never allow anybody to start the engine while adjustments, maintenance or servicing are being performed.
- Keep machine free of any debris.
- Verify that all warning labels and decals are present, visible and legible.
- Periodically check that all bolts, fasteners and catches are secure and in safe operating condition.
- After any maintenance or servicing, ensure that all guards and safety devices are correctly installed and secure before operating the roller.

4. Controls

Please refer to the illustrations. All directions are given with reference to the operator sitting in the seat. Numbers in brackets refer to part numbers as shown in the diagrams at the back of this manual.

4.1 Steering Wheel

The steering wheel (5377) controls the angle of the smoothing rollers, which in turn steer the unit. The amount the wheel can be turned is limited, so the turning circle of the roller is relatively large.

To move forward or back simply tum the steering wheel to suit the direction you are aiming for. As the direction changes at the end of every run, you will need to practice with the roller to become accustomed to the steering. To explain; if you want to move forward while moving to the right, turn the steering wheel anti-clockwise, but if you want to move forward while moving to the left you must turn the steering wheel clockwise.

4.2 Motion Pedals

These two foot pedals (1335 & 1336), found either side of the steering wheel column (1313), control the motion of the rear drive roller (1467). The pedals are connected so they cannot both be pressed down at the same time, you can only go one way or the other. Basically if you press down on the right pedal you will move to the right, and if you press down on the left pedal you will move to the left. The further you depress these pedals, the faster will be your speed in that direction.

If you release both pedals at once, the transmission (5366) will automatically return to the neutral, stationary position. It is recommended that you operate these pedals smoothly, to extend the transmission life and avoid potentially dangerous sudden stops or changes in directions.

4.3 Lifting Bar

The lifting bar (1437) is stored on the tow bar bracket (1436) behind the operators seat (5080). It is used to create enough leverage force for the operator to raise the roller onto the lifting wheels (5317), making the roller ready for towing.

Firstly slide the lifting bar over the lifting arm assembly (1392) on the left hand side of the roller. You must now release the wheel lock bracket (1396) holding the lifting arm (1392), then start lifting the wheels with the lifting bar. The lifting bar spring (5382) assists in lifting the roller. Once you have moved the lifting wheels around so they are touching the ground, you will have to push harder to get them over centre and then they will lock into place.

When you want to let the machine back down on its rollers again, first release the wheel lock bracket and let the machine drop gently to the ground, then push the lifting bar down until the lifting arm assembly locks back into the upright position.

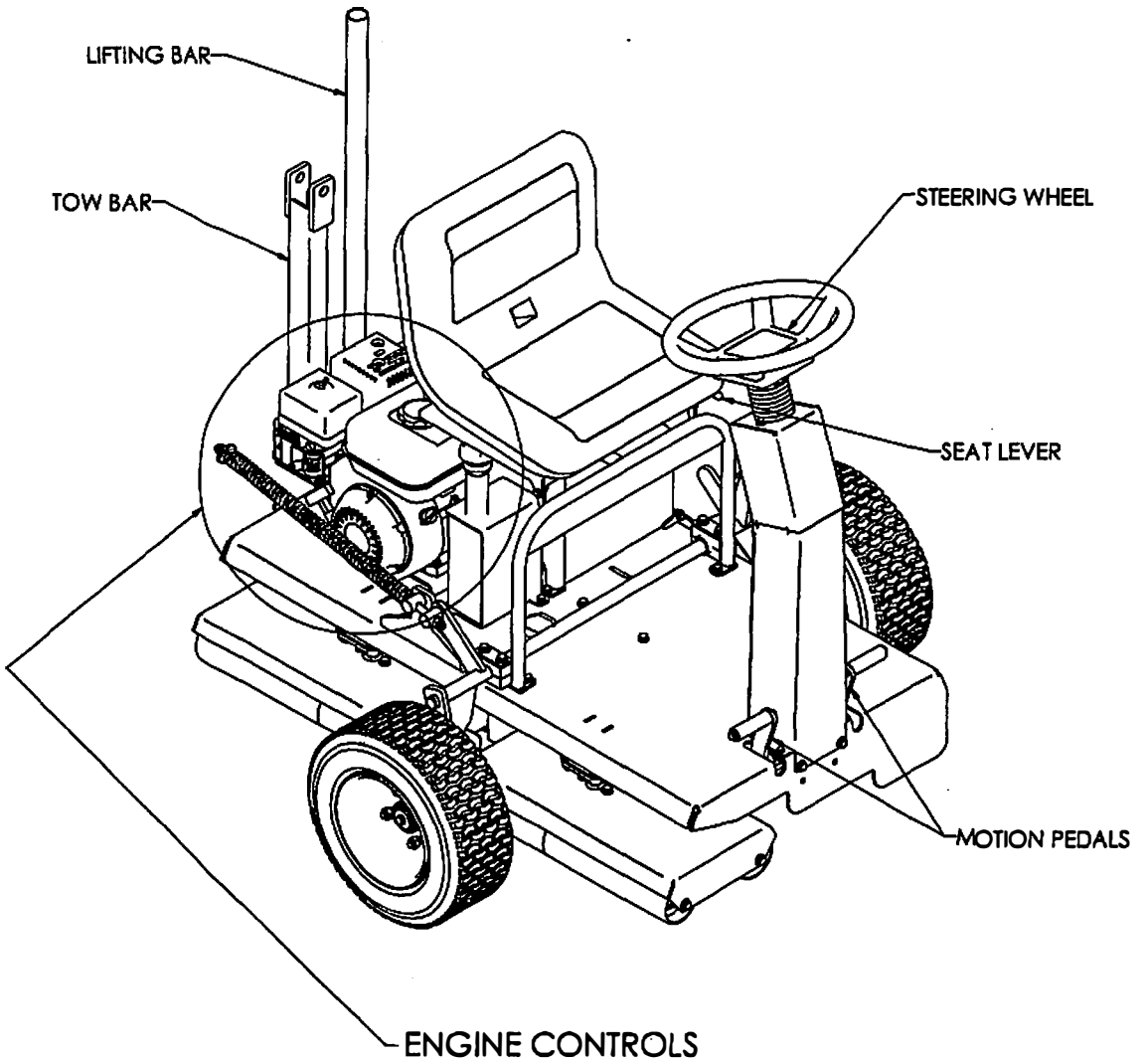
LIFTING BAR
TOW BAR
STEERING WHEEL
SEAT LEVER
MOTION PEDALS
ENGINE CONTROLS

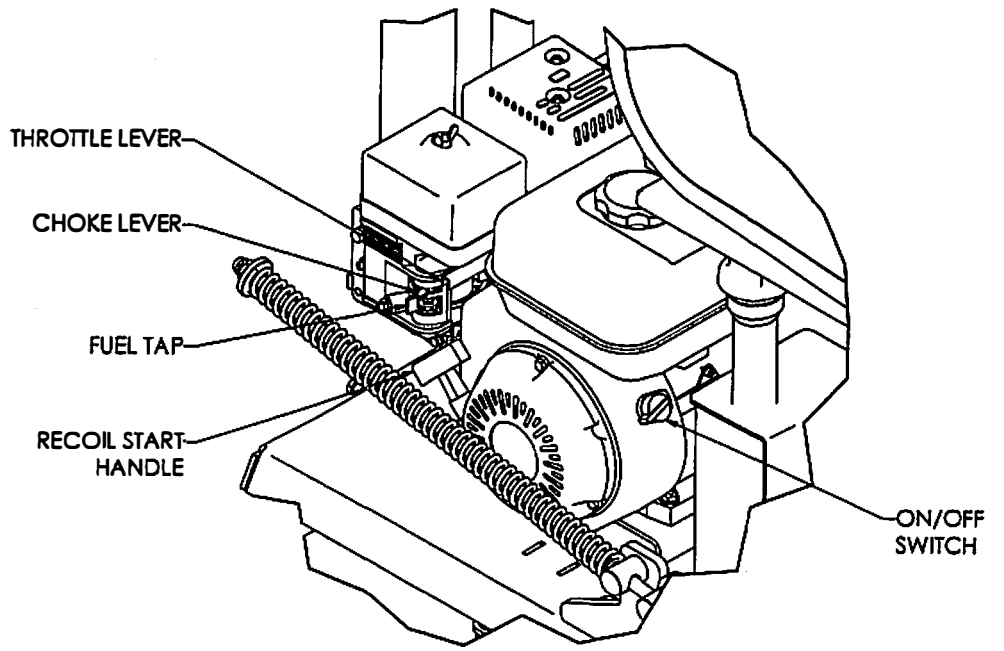
THROTTLE LEVER
CHOKE LEVER
FUEL TAP
RECOIL START HANDLE
ON/OFF SWITCH

4.4 Tow Bar

The tow bar (1457) is found behind the operators seat (5080). It has a quick release pin (5370) attached, which allows you to quickly raise and lower the tow bar and lock it into either position.

Depending on the type of machine you are using to tow the roller with, you will be able to move the tow bar to the height required by undoing a couple of bolts and re-positioning the tow bar pivot bracket (1454) to a higher or lower setting. There are seven different height settings, at 30mm spacings.

4.5 Seat Adjustment

The seat (5080) can be moved forward or back to adjust for different height operators. Simply pull the lever at the front left of the seat to the left and slide the seat forward or back to suit, then release the lever.

4.6 Engine Controls

Note : Read the engine manual before operating this machine.

On/Off Switch

Allows the engine to start and also stops the engine.
This switch is located on the front of the engine. It is marked ON and OFF. To start the machine, you must first move this control to ON. When you want to kill the engine, move this switch to the OFF position.

Choke Lever

This control is required when starting the engine.
Before pulling on the recoil start handle, push the Choke control to on. Once the engine is running, push the Choke control to off. Do not use the choke if the engine is already warmed up or the air temperature is high.

Throttle Lever

Controls rpm of the engine.
This control is located next to the choke control. It sets the engine rpm and therefore can increase and decrease the speed of the roller. It is recommended you set this control quite high.

Fuel Tap

This lever is located underneath the Choke Lever. It must be moved to the open position before attempting to start the engine. Once you have finished using the roller and you have turned the engine off, switch the fuel tap to the closed position.

Recoil Start Handle

This engine is a recoil start type. To start the engine you pull on the Recoil Start Handle quickly to turn the engine over. The controls on the engine described above must all be set correctly for the engine to start.

5. Operating Instructions

☠ DANGER ☠
Do not operate the Greens Roller until you have completely read this manual.

5.1 Preliminary Checks

1. Clear any debris from above and underneath the machine.
2. Ensure scheduled maintenance activities have been completed.
3. Ensure all guards and covers are firmly fixed in place.
4. Check engine oil level; change according to manufacturer's recommendations.
5. Ensure there is petrol in the fuel tank.
6. Lift the Lifting Arm Wheels clear of the ground and ensure they are locked in place.

5.2 Start Up

1. Turn the ON/OFF switch to ON.
2. Turn the Fuel Tap to the open position.
3. Move the choke lever to the on position.
4. Set the throttle lever to fast.
5. Pull the Recoil Start Handle firmly and quickly.
6. When the engine has fired, push the choke lever to the off position.
7. Move the throttle lever to the desired setting, (usually fast).

5.3 Driving (Traversing) the Greens Roller

1. Sit in the operators seat, taking care not to knock the motion pedals as you take your seat.
2. Take hold of the steering wheel and slowly press either the left or right motion pedals with your corresponding foot, in whichever direction you wish to move. The further you depress the pedal, the faster you will travel in that direction.
3. To stop, just release the foot pedal and the machine will stop quite quickly. As you become familiar with the machine, you will get the feel for when you should release the foot pedal, which will be prior to where you want to finish the run, as the roller will continue to roll for a short time after you release the pedal. As you come to a stop you should then gently depress the other foot pedal for your return pass.
4. Do not depress the foot pedals too quickly, this will result in possible skidding and scuffing of the ground under the drive roller. You should always operate the foot pedals in a controlled manner.

5. To move forward or back simply turn the steering wheel to suit the direction you are aiming for. As the direction changes at the end of every run, you will need to practice with the roller to become accustomed to the steering. To summarise; if you want to move forward while traversing to the right, turn the steering wheel anti-clockwise, but if you want to move forward while traversing to the left you must turn the steering wheel clockwise. This is reversed if you want to travel in reverse.

5.4 Shut Down

1. Traverse the roller to near the vehicle you are using to tow it.
2. Turn engine speed to idle, allow to run for 10 to 20 seconds.
3. Turn ON/OFF switch to OFF.
4. Move the Fuel Tap to the closed position.
5. Lower the tow bar into the towing position.
6. Using the lifting bar, raise the roller onto the lifting wheels and ensure it has locked into place.
7. Hook the roller to your towing vehicle.
8. If finished for the day, generally clean the greens roller, making sure that there is no accumulated debris, particularly around the engine.

WARNING

Never use high-pressure water units to clean the GSR-1200 Greens Roller. Using this type of device around bearings and engine seals can compromise their integrity and lead to premature failure of these components.

6. Maintenance Operations

The performance of certain maintenance, adjustment or repair operations will be determined by the owner's facilities.

Excessive tilting of the machine for the purpose of under-deck servicing should be avoided. If the Roller is tilted there is a risk that engine oil can enter the cylinder head of the engine and transmission oil can leak from the oil cap located on top of the oil tank. These leaks may result in expensive repairs to the machine. So it is not recommended unless absolutely necessary. For the purpose of under-deck servicing, it is recommended that the machine be lifted on a joist or small crane.

6.1 Adjustments and Settings

6.1.1 Drive Chain

The drive chain (5383) is located under the rear cover (1423) and is tensioned via idler gears (5381), which are mounted to an idler arm (1458). This arm can be tensioned further if the chain has stretched. Simply screw the locking nut further on to the idler adjuster arm (0424) to increase tension on the chain.

6.2 Engine Maintenance

Maintenance on the Rollers engine should be carried out as per the manufacturer's owner's manual supplied with this machine.

To drain engine oil;

1. Put the roller onto it's towing wheels.
2. Tilt the unit so the end of the machine with the engine is closer to the ground and support the other end to hold it in this position.
3. Have a funnel ready to place under the oil drain plug, remove the plug and place the funnel under the plug to guide the oil into a container.
4. Replace drain plug and wipe away excess oil from the roller.
5. Re-fill engine with oil as per manufacturer's instructions, making sure you return the machine to a level position to check the oil level.

6.3 Maintenance Schedule

After first 4 hours :

- Generally check for any loose nuts, bolts or fittings and re-tighten as required.
- Check the drive chain (5383) to ensure no stretching has occurred.

Daily : Before Use

- Quickly check for any loose nuts, bolts and fasteners.
- Check engine oil for correct level.
- Check fuel tank for fuel.

Daily : After Use

- Clear any debris on the roller, especially from around engine.

Every Month

- Check for even tyre pressure in the lifting wheels.
- Lubricate drive chain (5383) lightly with a suitable greasing compound or greasing oil. After greasing ensure you run the roller off the turf somewhere briefly to disperse any excess lubricant, to avoid damaging turf.
- Re-tension chain if required.
- Grease the drive roller bearings (5142) and the steering head pivot bearings (5359). There are grease nipples fitted to the bearing housings to facilitate greasing.
- Check the oil level in the oil tank. It should be approximately 40mm below the top of the flat surface of the tank. If this needs topping up or replacing, use Supersyn 5W-40 synthetic engine oil, or equivalent.

Every 12 Months

- Do a thorough check over the entire machine, checking all nuts and bolts and ensuring they are tight.

Engine Maintenance

- Maintain according to the manufacturer's schedule (see accompanying engine manual).

WARNING

Never use high-pressure water units to clean the GSR-1200 Greens Roller. Using this type of device around bearings and engine seals can compromise their integrity and lead to premature failure of these components.

7. Warranty

Graden Industries Pty. Ltd. warrants its products to be free of defects in material or workmanship. This warranty is applicable only for the normal service life expectancy of the machine, or components, not to exceed twelve (12) continuous months from the date of delivery of the new Graden product to the original purchaser.

Under no circumstances will this warranty cover any merchandise or components, which, in the opinion of the company, has been subjected to negligent handling, misuse, alteration, accident or repairs made with any parts other than those obtainable through Graden Industries Pty. Ltd.

The company in no way warrants belts, tyres, engine, gearbox, transmission or any other trade accessories or components ; these items are warranted separately by their respective manufacturers.

Our obligation under this warranty shall be limited to repairing or replacing, free of charge to the original purchaser, any part that :

- subject to our judgement, shall show evidence of such defect
- shall be returned to Graden Industries Pty. Ltd. within thirty (30) days from date of failure, directed through the dealer and/or distributor from whom it was originally purchased
- transportation charges have been pre-paid

This warranty shall not be interpreted to render Graden Industries Pty. Ltd. liable for injury or damages of any kind or nature, direct, consequential, or contingent to person or property. This warranty does not extend to any expense or loss incurred for labour, supplies, substitute machinery, rental or for any other reason.

There are no warranties, either expressed or implied, of merchantability or fitness for particular purpose intended or fitness for any other reason.

This warranty is subject to any existing conditions of supply which may directly affect our ability to obtain materials or manufacture replacement parts.

Graden Industries Pty. Ltd. reserves the right to make improvements in design or changes in specification at any time, without incurring any obligations to owners of units previously sold.

No-one is authorised to alter, modify, or enlarge this warranty nor the exclusion, limitations and reservations.

Part Number	Description
A	5/16"UNF x 1 ½" Long Bolt
B	5/16" Flat Washer
C	5/16"UNF Hex Nut
D	5/16"UNF Nyloc Nut
E	3/8"UNF x 1" Long Bolt
F	3/8"UNF x 1 ¼" Long Bolt
G	3/8"UNF x 1 ½" Long Bolt
H	3/8"UNF x 1 ¾" Long Bolt
I	3/8"UNF x 4" Long Bolt
J	3/8" Flat Washer
K	3/8" Internal Tooth Washer
L	3/8" Commercial Washer
M	3/8" Mudguard Washer
N	3/8"UNF Hex Nut
O	3/8"UNF Nyloc Nut
P	½"UNF Nyloc Nut

Part Number	Description
0379	Fixing Collar
0511	Bush
1136	Bush
1214	Bush
1320	Pivot Shaft
1321	Steering Disc
1324	Linkage Arm
1327	Steering Pivot
1328	Steering Pivot Rod
1377	Short Steering Axle
1378	Long Steering Axle
1397	Steering Spacer Bush
1440	Front Steering Head
1441	Rear Steering Head
1471	Long Roller Spacer
1472	Roller Spacer
1473	Short Roller Spacer
1648	Long Steering Roller
1649	Short Steering Roller
1653	Long Steering Roller Assembly
1654	Short Steering Roller Assembly
5160	Bronze Bush
5171	Tension Spring
5173	Pressed Metal Balljoint
5358	Bearing Housing
5359	1" Bearing
9352	Bearing

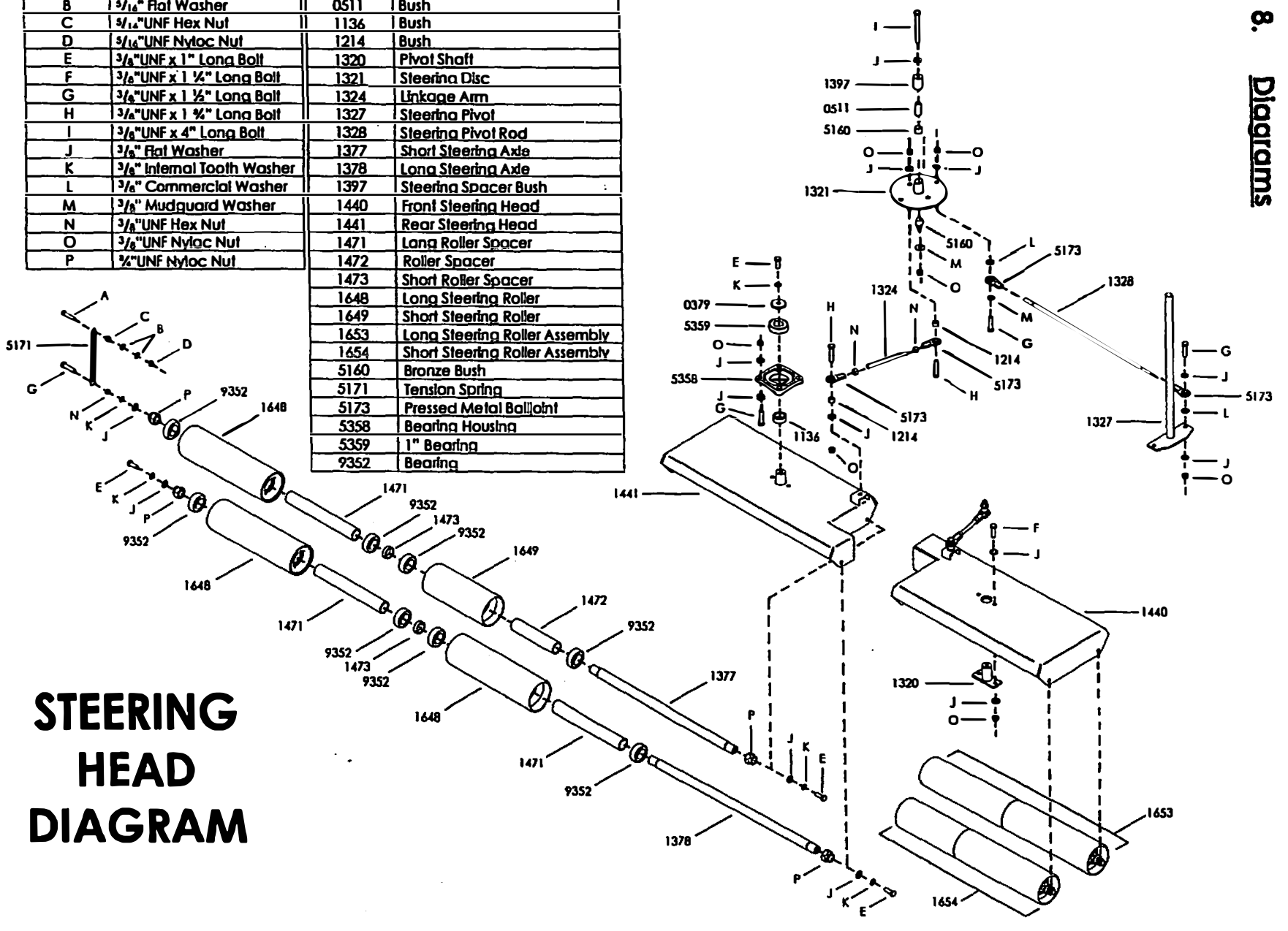

STEERING HEAD DIAGRAM

DRIVE ROLLER DIAGRAM

Part Number	Description
0068	Key
0094	Spacer
0379	Spacer
0424	Idler Arm
0510	Bush
0511	Bush
0515	Pedal Bush
0533	Lever Quadrant
1192	Linkage Rod
1318	Roller Chassis
1324	Linkage Arm
1335	Left Hand Motion Pedal
1336	Right Hand Motion Pedal
1381	Drive Rod
1458	Idler Arm
1467	Drive Roller
1469	Dampener Plate
1470	Idler Gear Bush
1655	Pedal Rod Pivot
1656	Spacer Bush
1657	Idler Gear Bolt
5142	Bearing Assembly
5160	Bronze Bush
5173	Pressed Metal Balljoint
5174	Spring
5366	Transmission
5367	8 Tooth Drive Gear
5375	TaperLock Hub
5376	30 Tooth Gear Pulley
5381	Idler Gear
5383	Drive Chain
5385	Dampener Strut
5433	External Circlip
9093	Spacer
9425	2mm R-Clip

Part Number	Description
A	5/16"UNF x ¾" Long Bolt
B	5/16"UNF x 1" Long Bolt
C	5/16"UNF x 1 ¼" Long Bolt
D	5/16"UNF x 1 ¾" Long Bolt
E	5/16"UNF x 2 ¼" Long Bolt
F	5/16" Flat Washer
G	5/16" Internal Tooth Washer
H	5/16" Guard Washer
I	5/16"UNF Nyloc Nut
J	5/16"UNC Hex Nut
K	3/8"UNF x 1 ½" Long Bolt
L	3/8"UNF x 2" Long Bolt
M	3/8"UNF x 2 ½" Long Bolt
N	3/8"UNF x 2 ¾" Long Bolt
O	3/8"UNF x 3 ½" Long Bolt
P	3/8"UNF x 4" Long Bolt
Q	3/8" Flat Washer
R	3/8" Commercial Washer
S	3/8"UNF Hex Nut
T	3/8"UNF Nyloc Nut
U	7/16" Flat Washer
V	7/16" UNF Nyloc Nut

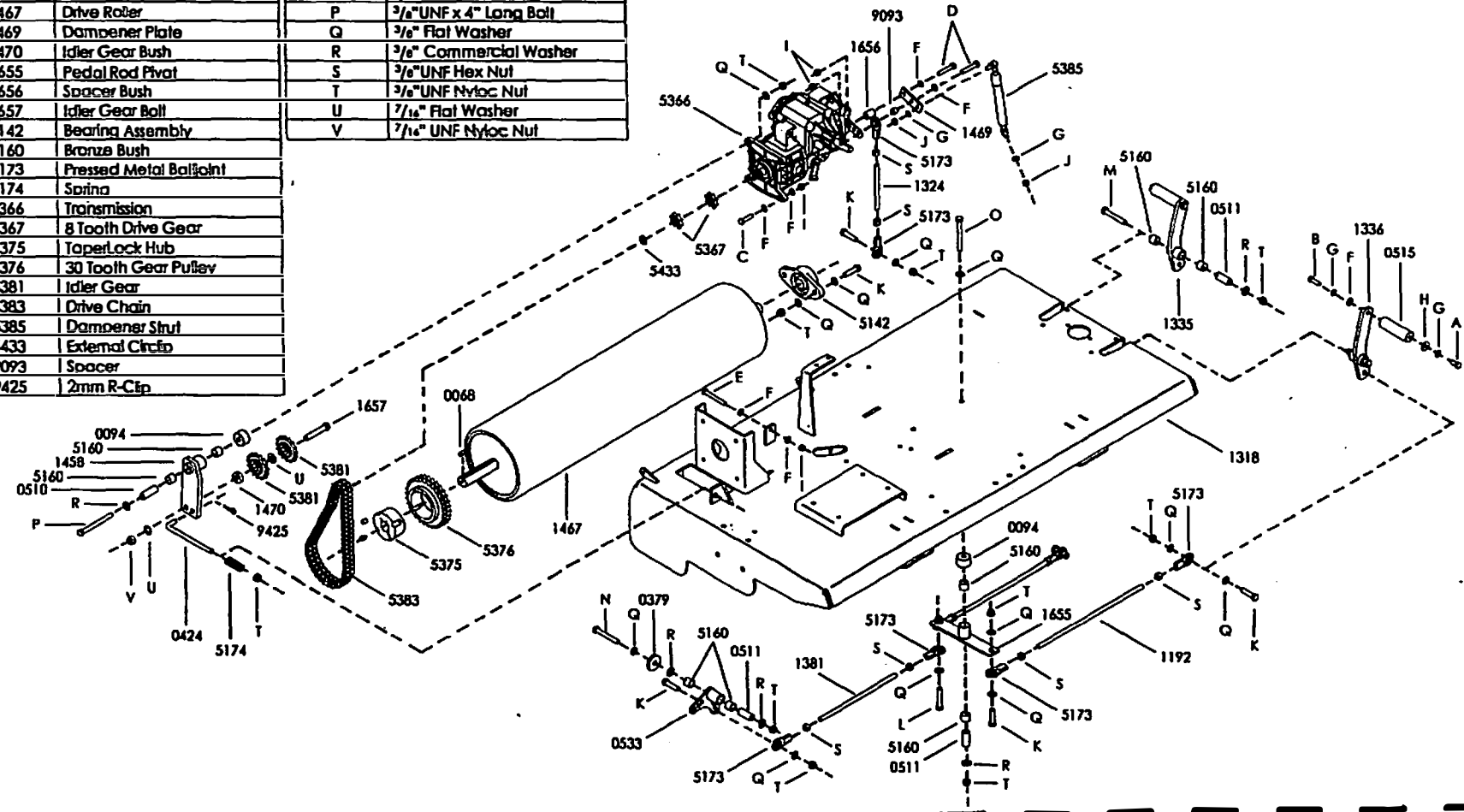

ENGINE-TRANSMISSION DIAGRAM

Part Number	Description
A	¼"UNF x ½" Long Bolt
B	¼"UNF x 1 ½" Long Bolt
C	¼" Flat Washer
D	¼" Internal Tooth Washer
E	¼"UNF Nyloc Nut
F	5/16"UNF x 1" Long Bolt
G	5/16"UNF x 1 ½" Long Bolt
H	5/16" Flat Washer
I	5/16" Internal Tooth Washer
J	5/16"UNF Nyloc Nut
K	5/16"UNC x ¾" Long Bolt
L	5/16"UNC Grub Screw

Part Number	Description
1318	Roller Chassis
1399	Fan Mounting Plate
1411	Oil Tank
1658	5mm x 25mm Key
1659	3/16" x 40mm Key
5197	Tank Cap
5198	Oil Filter
5277	Filter Elbow
5366	Transmission
5368	Honda 6.5hp Engine
5371	Coupling Centre
5372	¾" Bore Coupling
5373	15mm Bore Coupling
5374	Coupling Assembly
5387	O-Ring Fitting
5388	Large O-Ring Fitting
5389	Straight Fitting
5390	Large Straight Fitting
5391	Elbow Hose Fitting
5392	Straight Hose Fitting
5393	Large Elbow Hose Fitting
5434	Transmission Cooling Fan
5436	Tank-Filter Hose
5437	Filter-Transmission Hose
5438	Transmission-Tank Hose
9093	Spacer

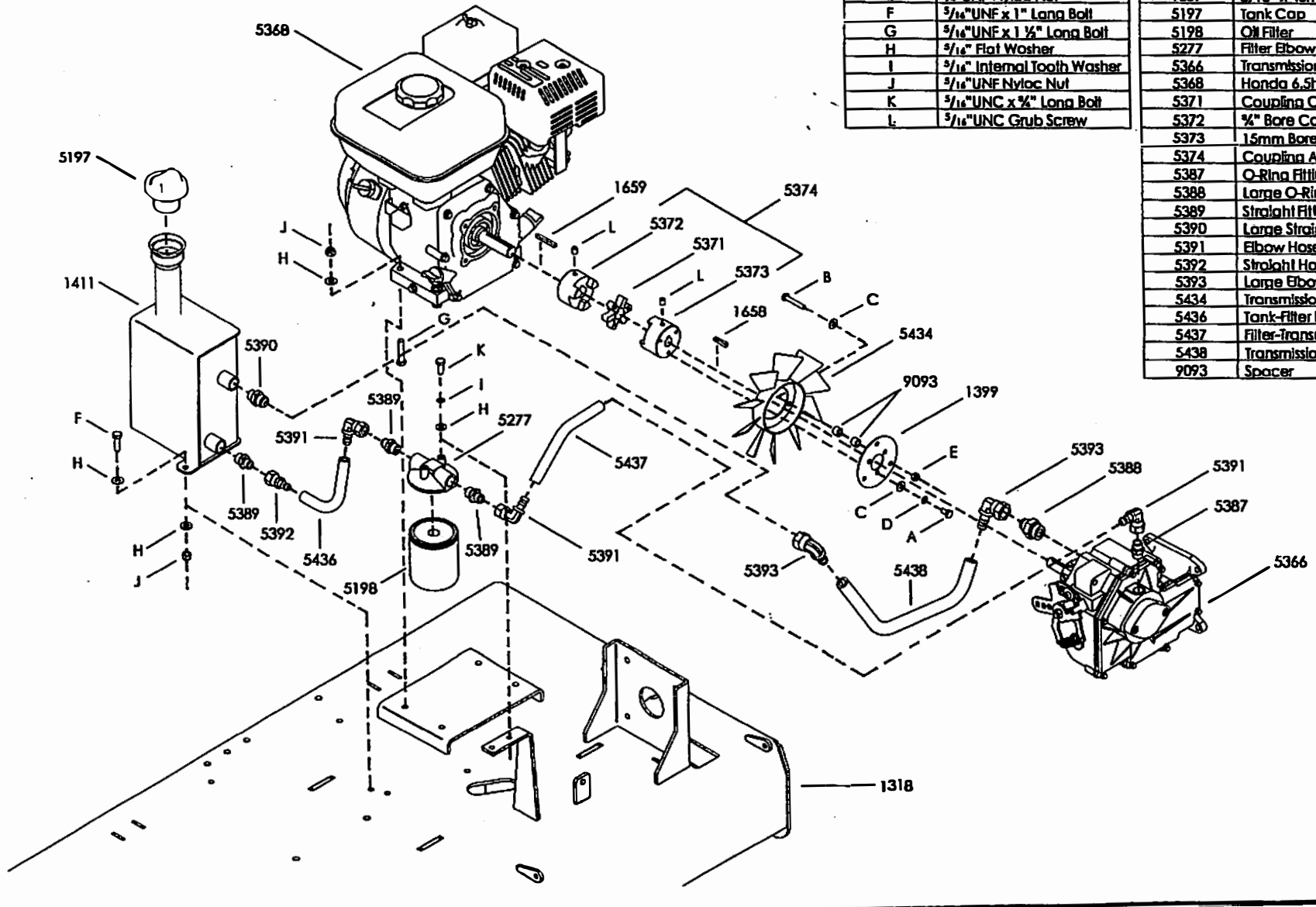

LIFTING MECHANISM DIAGRAM

Part Number	Description
0152	Fixing Collar
0379	Fixing Collar
0570	Spacer
1318	Roller Chassis
1324	Linkage Arm
1382	Lifting Rod
1383	Blind Trunnion
1384	Tapped Trunnion
1392	Lifting Arm Assembly
1394	Wheel Lock Plate
1396	Wheel Lock Bracket
1418	Lift Spring Bracket
1438	Wheel Hub
5147	Spring
5173	Pressed Metal Balljoint
5306	Clamp
5317	16x6.50-8 Tyre
5318	Wheel Rim
5382	Lifting Spring
9352	Bearing
9425	2mm R-Clip
A	¼"UNF x 1" Long Bolt
B	¼"UNF x 1 ¼" Long Bolt
C	¼" Flat Washer
D	¼"UNF Nyloc Nut
E	¼"UNF Hex Nut
F	5/16"UNF x 1 ¼" Long Bolt
G	5/16" Internal Tooth Washer
H	5/16"UNF Hex Nut
I	3/8"UNF x 1 ¼" Long Bolt
J	3/8"UNF x 3" Long Bolt
K	3/8" Flat Washer
L	3/8" Internal Tooth Washer
M	3/8"UNF Nyloc Nut
N	3/8"UNF Hex Nut
O	½" Flat Washer
P	½"UNF Nyloc Nut
Q	½"UNF Wheel Nut

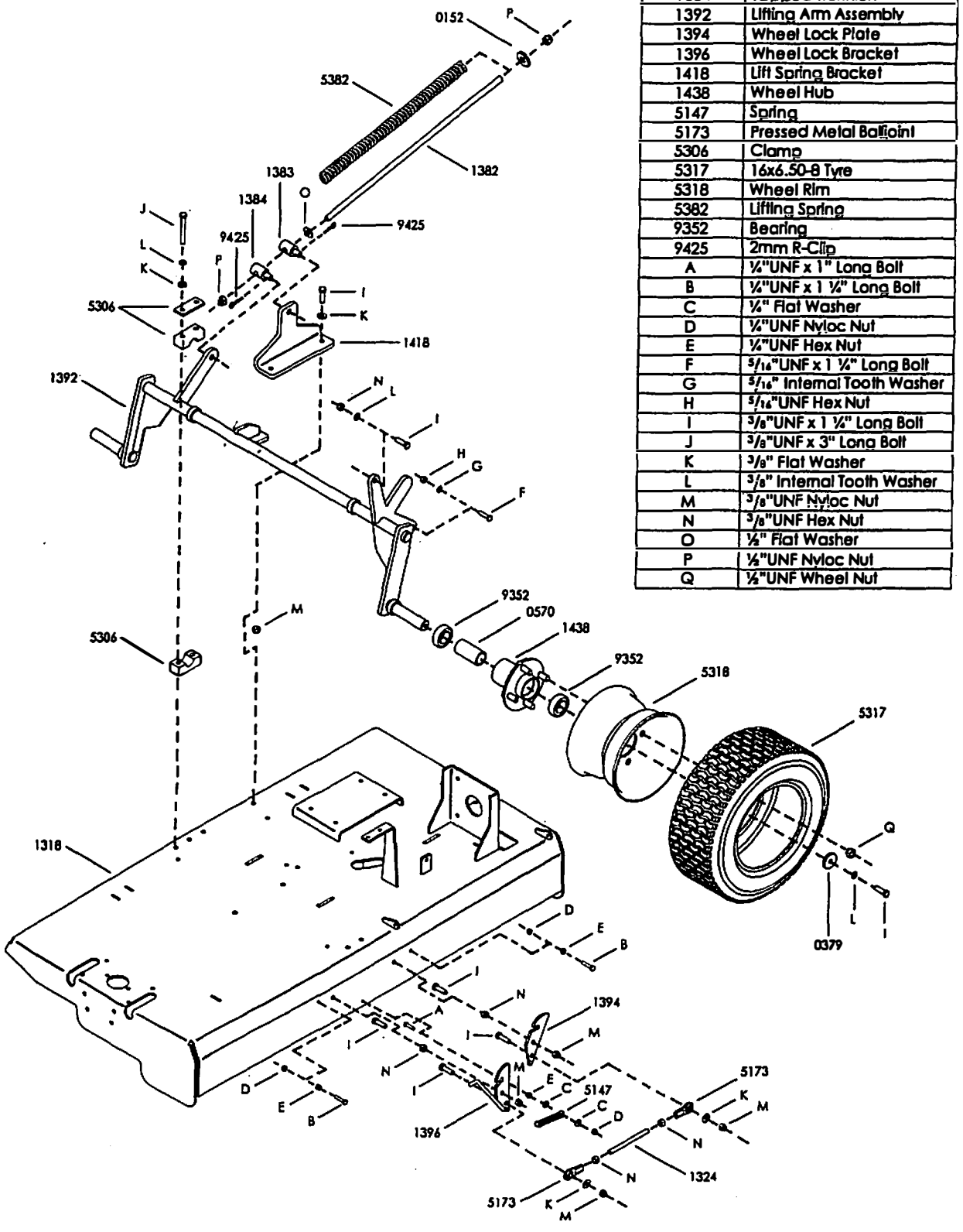

SEAT DIAGRAM

Part Number	Description
0226	Seat Pan
1318	Roller Chassis
1414	Seat Support Frame
1417	Rear Support Frame
1423	Cover
5080	Seat
5111	Seat Rails
5439	Rubber Bumper
5440	Seat Support Rubber
A	¼"UNF x 1" Long Bolt
B	¼"UNF x 1 ½" Long Bolt
C	¼" Flat Washer
D	¼"UNF Nyloc Nut
E	5/16"UNF x 1" Long Bolt
F	5/16"UNF x 1 ½" Long Bolt
G	5/16" Flat Washer
H	5/16" Internal Tooth Washer
I	5/16"UNF Nyloc Nut
J	5/16"UNC Hex Nut
K	M8 x 25mm Long Bolt

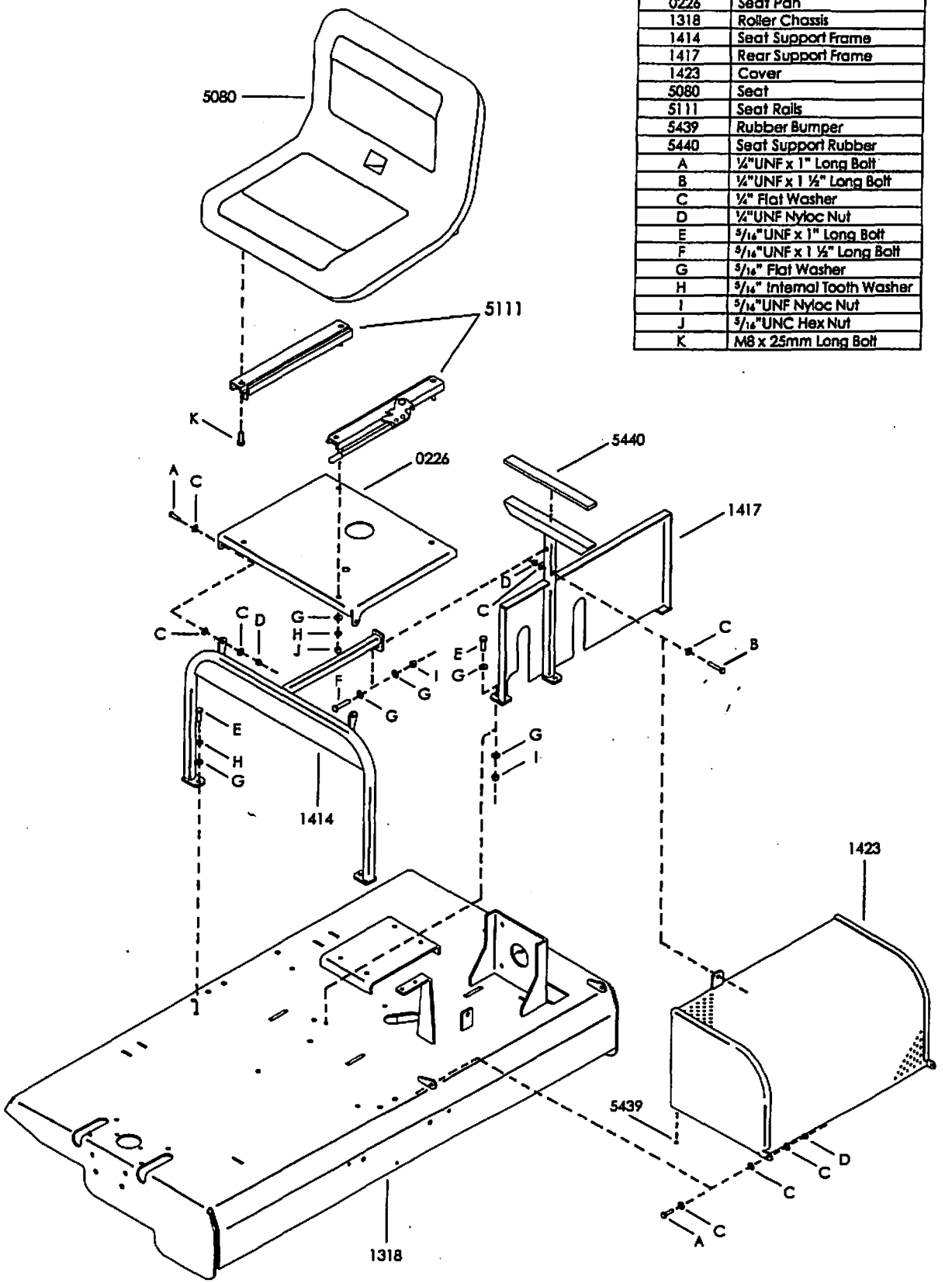

STEERING WHEEL & TOW BAR DIAGRAM

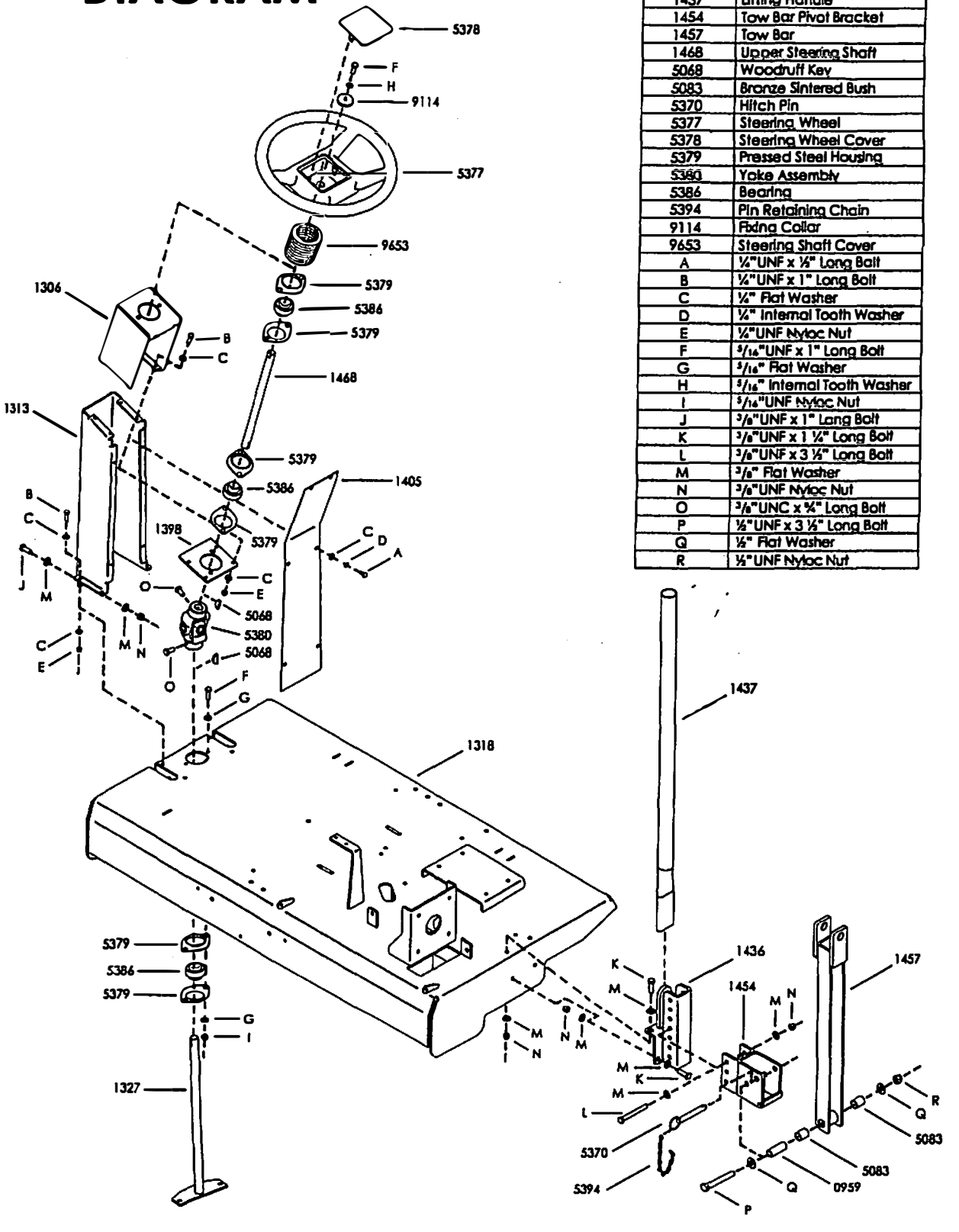

Part Number	Description
0959	Idler Bush
1306	Steering Column Box
1313	Steering Column
1318	Roller Chassis
1327	Steering Pivot
1398	Bearing Plate
1405	Column Cover
1436	Tow Bar Bracket
1437	Lifting Handle
1454	Tow Bar Pivot Bracket
1457	Tow Bar
1468	Upper Steering Shaft
5068	Woodruff Key
5083	Bronze Sintered Bush
5370	Hitch Pin
5377	Steering Wheel
5378	Steering Wheel Cover
5379	Pressed Steel Housing
5380	Yoke Assembly
5386	Bearing
5394	Pin Retaining Chain
9114	Fixing Collar
9653	Steering Shaft Cover
A	¼"UNF x ½" Long Bolt
B	¼"UNF x 1" Long Bolt
C	¼" Flat Washer
D	¼" Internal Tooth Washer
E	¼"UNF Nyloc Nut
F	5/16"UNF x 1" Long Bolt
G	5/16" Flat Washer
H	5/16" Internal Tooth Washer
I	5/16"UNF Nyloc Nut
J	3/8"UNF x 1" Long Bolt
K	3/8"UNF x 1 ¼" Long Bolt
L	3/8"UNF x 3 ½" Long Bolt
M	3/8" Flat Washer
N	3/8"UNF Nyloc Nut
O	3/8"UNC x ¾" Long Bolt
P	½"UNF x 3 ½" Long Bolt
Q	½" Flat Washer
R	½"UNF Nyloc Nut