ROHM Solution Simulator

Nano Cap™, Low Noise & Input/Output Rail-to-Rail High Speed CMOS Operational Amplifier for Automotive

BD7281YG-C – Non-inverting Amplifier (Sine Wave Input) – Transient Response sim

This circuit simulates the transient response to sine wave input with non-inverting amplifier configured Op-Amps. You can observe the output voltage and how faithfully the sine wave input voltage is reproduced. You can customize the parameters of the components shown in blue, such as VSOURCE, or peripheral components, and simulate the non-inverting amplifier with the desired operating condition.

You can simulate the circuit in the published application note: Operational amplifier, Comparator (Tutorial). [JP] [EN] [CN] [KR]

General Cautions

Caution 1: The values from the simulation results are not guaranteed. Please use these results as a guide for your design.

Caution 2: These model characteristics are specifically at Ta=25°C. Thus, the simulation result with temperature variances may significantly differ from the result with the one done at actual application board (actual measurement).

Caution 3: Please refer to the Application note of Op-Amps for details of the technical information.

Caution 4: The characteristics may change depending on the actual board design and ROHM strongly recommend to double check those characteristics with actual board where the chips will be mounted on.

1 Simulation Schematic

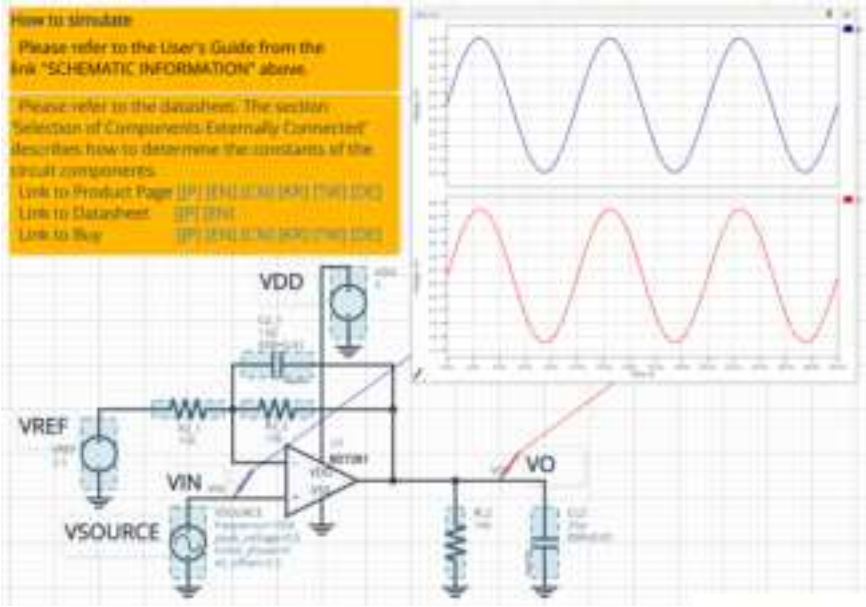

Figure 1. Simulation Schematic

2 How to simulate

The simulation settings, such as parameter sweep or convergence options, are configurable from the 'Simulation Settings' shown in Figure 2, and Table 1 shows the default setup of the simulation.

In case of simulation convergence issue, you can change advanced options to solve. The temperature is set to 27 °C in the default statement in 'Manual Options'. You can modify it.

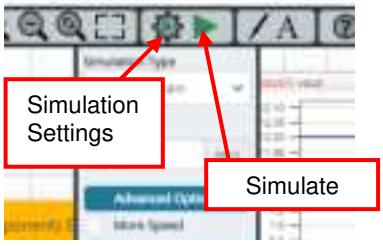

Figure 2. Simulation Settings and execution

Table 1. Simulation settings default setup

Parameters	Default	Note
Simulation Type	Time-Domain	Do not change Simulation Type
End Time	30 µs	-
Advanced options	Balanced	-
	Time Resolution Enhancement Convergence Assist	-
Manual Options	.temp 27	-

©2022 ROHM Co., Ltd.

3 Simulation Conditions

Table 2. List of the simulation condition parameters

Instance Name	Type	Parameters	Default Value	Variable Range		Units
				Min	Max	
VSOURCE	Voltage Source	Frequency	100k	10	10M	Hz
		Peak_voltage	0.5	0	5.5	V
		Initial_phase	0	free		°
		DC_offset	2.5	0	5.5	V
		DF	0.0	fixed		1/s
		AC_magnitude	0.0	fixed		V
		AC_phase	0.0	fixed		°
VDD	Voltage Source For Op-Amp	Voltage_level	5	2.5*(Note1)*	5.5*(Note1)*	V
		AC_magnitude	0.0	fixed		V
		AC_phase	0.0	fixed		°
VREF	Voltage Source	Voltage_level	2.5	VSS	VDD	V
		AC_magnitude	0.0	fixed		V
		AC_phase	0.0	fixed		°

(Note 1) Set it to the guaranteed operating range of the Op-Amps.

3.1 VSOURCE parameter setup

Figure 3 shows how the VSOURCE parameters correspond to the VIN stimulus waveform.

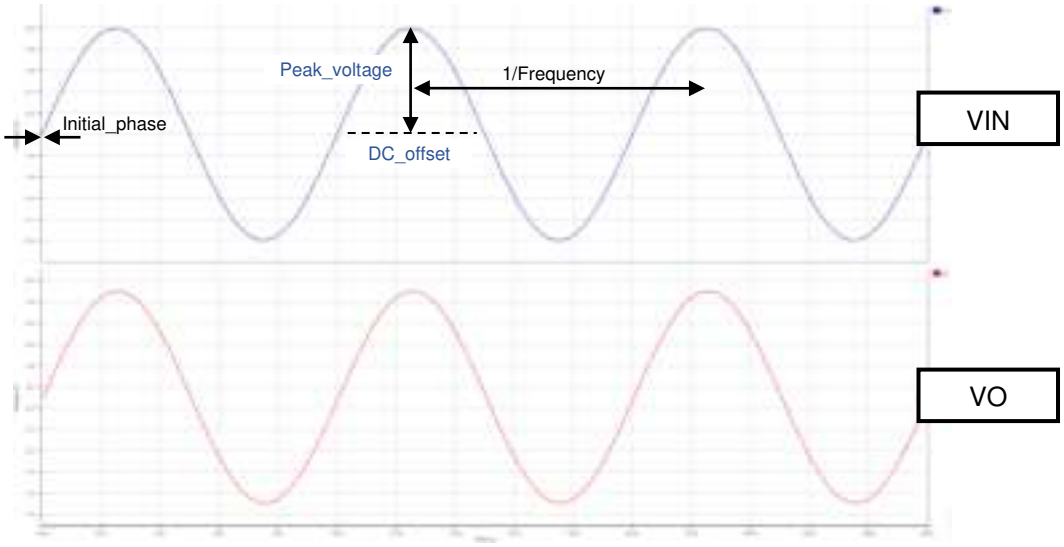

Figure 3. VSOURCE parameters and its waveform

4 Op-Amp model

Table 3 shows the model pin function implemented. Note that the Op-Amp model is the behavior model for its input/output characteristics, and no protection circuits or the functions not related to the purpose are not implemented.

Table 3. Op-Amp model pins used for the simulation

Pin Name	Description
+IN	Non-inverting input
-IN	Inverting input
VDD	Positive power supply
VSS	Negative power supply / Ground
OUT	Output

©2022 ROHM Co., Ltd.

5 Peripheral Components

5.1 Bill of Material

Table 4 shows the list of components used in the simulation schematic. Each of the capacitors has the parameters of equivalent circuit shown below. The default values of equivalent components are set to zero except for the ESR of C. You can modify the values of each component.

Table 4. List of capacitors used in the simulation circuit

Type	Instance Name	Default Value	Variable Range		Units
			Min	Max	
Resistor	R2_1	10k	1k	1M	Ω
	R2_2	10k	1k	1M	Ω
	RL2	10k	1k	1M, NC	Ω
Capacitor	C2_1	10	0.1	100	pF
	CL2	25	free, NC		pF

5.2 Capacitor Equivalent Circuits

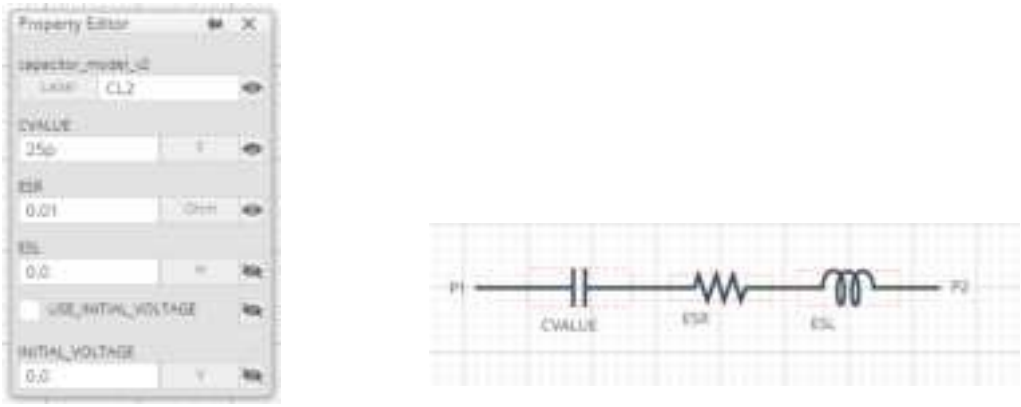

(a) Property editor (b) Equivalent circuit

Figure 4. Capacitor property editor and equivalent circuit

The default value of ESR is 0.01 Ω.

(Note 2) These parameters can take any positive value or zero in simulation but it does not guarantee the operation of the IC in any condition. Refer to the datasheet to determine adequate value of parameters.

6 Recommended Products

6.1 Op-Amp

BD7281YG-C : Nano Cap™, Low Noise & Input/Output Rail-to-Rail High Speed CMOS Operational Amplifier for Automotive. [JP] [EN] [CN] [KR] [TW] [DE]

TLR4377YFV-C : Automotive High Precision & Input/Output Rail-to-Rail CMOS Operational Amplifier (Quad Op-Amp). [JP] [EN] [CN] [KR] [TW] [DE]

TLR2377YFVM-C : Automotive High Precision & Input/Output Rail-to-Rail CMOS Operational Amplifier (Dual Op-Amp). [JP] [EN] [CN] [KR] [TW] [DE]

TLR377YG-C : Automotive High Precision & Input/Output Rail-to-Rail CMOS Operational Amplifier. [JP] [EN] [CN] [KR] [TW] [DE]

LMR1802G-LB : Low Noise, Low Input Offset Voltage CMOS Operational Amplifier. [JP] [EN] [CN] [KR] [TW] [DE]

Technical Articles and Tools can be found in the Design Resources on the product web page.

©2022 ROHM Co., Ltd.

Notes

1) The information contained herein is subject to change without notice.

2) Before you use our Products, please contact our sales representative and verify the latest specifications :

3) Although ROHM is continuously working to improve product reliability and quality, semiconductors can break down and malfunction due to various factors.
Therefore, in order to prevent personal injury or fire arising from failure, please take safety measures such as complying with the derating characteristics, implementing redundant and fire prevention designs, and utilizing backups and fail-safe procedures. ROHM shall have no responsibility for any damages arising out of the use of our Poducts beyond the rating specified by ROHM.

4) Examples of application circuits, circuit constants and any other information contained herein are provided only to illustrate the standard usage and operations of the Products. The peripheral conditions must be taken into account when designing circuits for mass production.

5) The technical information specified herein is intended only to show the typical functions of and examples of application circuits for the Products. ROHM does not grant you, explicitly or implicitly, any license to use or exercise intellectual property or other rights held by ROHM or any other parties. ROHM shall have no responsibility whatsoever for any dispute arising out of the use of such technical information.

6) The Products specified in this document are not designed to be radiation tolerant.

7) For use of our Products in applications requiring a high degree of reliability (as exemplified below), please contact and consult with a ROHM representative : transportation equipment (i.e. cars, ships, trains), primary communication equipment, traffic lights, fire/crime prevention, safety equipment, medical systems, servers, solar cells, and power transmission systems.

8) Do not use our Products in applications requiring extremely high reliability, such as aerospace equipment, nuclear power control systems, and submarine repeaters.

9) ROHM shall have no responsibility for any damages or injury arising from non-compliance with the recommended usage conditions and specifications contained herein.

10) ROHM has used reasonable care to ensure the accuracy of the information contained in this document. However, ROHM does not warrants that such information is error-free, and ROHM shall have no responsibility for any damages arising from any inaccuracy or misprint of such information.

11) Please use the Products in accordance with any applicable environmental laws and regulations, such as the RoHS Directive. For more details, including RoHS compatibility, please contact a ROHM sales office. ROHM shall have no responsibility for any damages or losses resulting non-compliance with any applicable laws or regulations.

12) When providing our Products and technologies contained in this document to other countries, you must abide by the procedures and provisions stipulated in all applicable export laws and regulations, including without limitation the US Export Administration Regulations and the Foreign Exchange and Foreign Trade Act.

13) This document, in part or in whole, may not be reprinted or reproduced without prior consent of ROHM.

ROHM SEMICONDUCTOR

Thank you for your accessing to ROHM product informations.
More detail product informations and catalogs are available, please contact us.

ROHM Customer Support System

http://www.rohm.com/contact/

© 2016 ROHM Co., Ltd. All rights reserved.