INSTRUCTION MANUAL

CT CONVERTER

MODEL **M8CT**

BEFORE USE ....

Thank you for choosing M-System. Before use, please check contents of the package you received as outlined below.
If you have any problems or questions with the product, please contact M-System's Sales Office or representatives.

■ PACKAGE INCLUDES:

Signal conditioner (body + CT protector).....(1)

■ MODEL NO.

Confirm Model No. marking on the product to be exactly what you ordered.

■ INSTRUCTION MANUAL

This manual describes necessary points of caution when you use this product, including installation, connection and basic maintenance procedures.

POINTS OF CAUTION

■ POWER INPUT RATING & OPERATIONAL RANGE

- Locate the power input rating marked on the product and confirm its operational range as indicated below:
  24V DC rating: 24V ±10%, approx. 30mA
  (50mA for current output)

■ GENERAL PRECAUTIONS

- Before you remove the unit or mount it, turn off the power supply and input signal for safety.

■ ENVIRONMENT

- Indoor use.
- When heavy dust or metal particles are present in the air, install the unit inside proper housing with sufficient ventilation.
- Do not install the unit where it is subjected to continuous vibration. Do not subject the unit to physical impact.
- Environmental temperature must be within 0 to 55°C (32 to 131°F) with relative humidity within 30 to 95% RH in order to ensure adequate life span and operation.
- Be sure that the ventilation slits are not covered with cables, etc.

■ WIRING

- Do not install cables close to noise sources (relay drive cable, high frequency line, etc.).
- Do not bind these cables together with those in which noises are present. Do not install them in the same duct.

■ AND ....

- The unit is designed to function as soon as power is supplied, however, a warm up for 10 minutes is required for satisfying complete performance described in the data sheet.

COMPONENT IDENTIFICATION

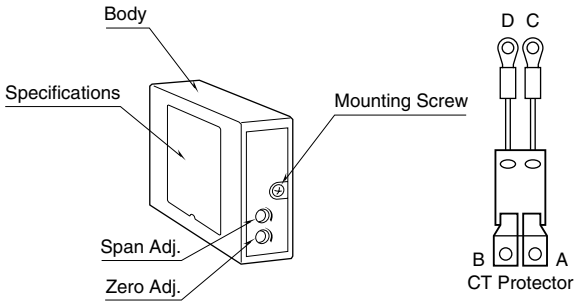

■ WARNING – The CTR Must Be Connected Correctly.

1) The CT protector (model: CTR) included in the product package must be used for safe operations. Turning on the CT without connecting the CTR opens the circuit and is potentially dangerous.
2) The CTR is not interchangeable with another. Be sure to match the serial No. of the CTR to that of the converter.
3) Connect the CTR's wires (C, D) and metal legs (A, B) to the corresponding terminals of the installation base as indicated in the figure to the right. The metal legs (A, B) are to be secured at the base terminals together with the output wires from the CT. Wrong connection may cause abnormally high temperature in the unit which could lead a fire in the worst cases.
4) Confirm the right connection of the CTR again before turning on the CT.

INSTALLATION

Use Installation Base (model: M8BSx).

5-2-55, Minamitsumori, Nishinari-ku, Osaka 557-0063 JAPAN
Phone: +81(6)6659-8201 Fax: +81(6)6659-8510 E-mail: info@m-system.co.jp

TERMINAL CONNECTIONS

Connect the unit as in the diagram below.

■ EXTERNAL DIMENSIONS unit: mm (inch)

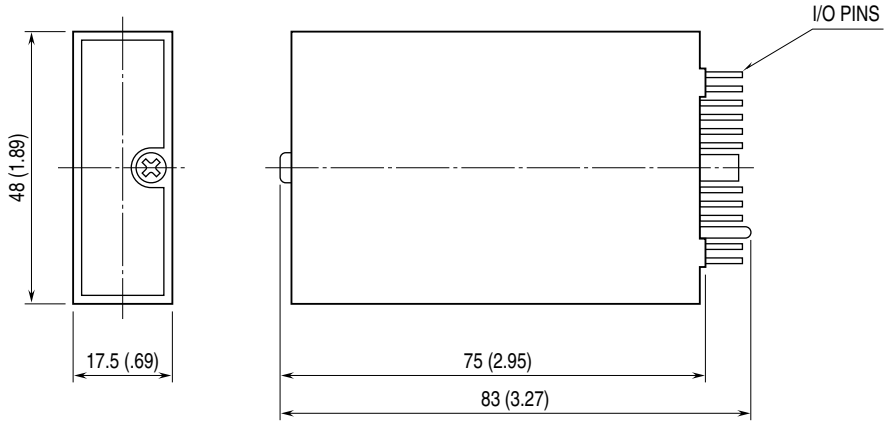

■ CONNECTION DIAGRAM

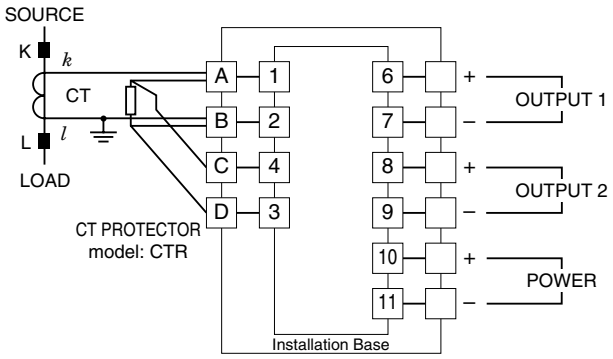

⚠ Be sure to use the CTR included in the package.
Turning the CT on without connecting the CTR will open the circuit.

CHECKING

1) Terminal wiring: Check that all cables are correctly connected according to the connection diagram. Check that the CT Protector (CTR) is connected on the base terminal.
2) Power input: Check the power input voltage.
3) Input: Check that the input signal is within 0 – 100% of the full-scale.
4) Output: Check that the load resistance meets the described specifications.

ADJUSTMENT PROCEDURE

This unit is calibrated at the factory to meet the ordered specifications, therefore you usually do not need any calibration.
For matching the signal to a receiving instrument or in case of regular calibration, adjust the output as explained in the following.

■ HOW TO CALIBRATE THE OUTPUT SIGNAL

Use a signal source and measuring instruments of sufficient accuracy level. Turn the power supply on and warm up for more than 10 minutes.
(Output 1 and Output 2 are linked.)
1) ZERO: Apply 0% input and adjust output to 0%.
2) SPAN: Apply 100% input and adjust output to 100%.
3) Check ZERO adjustment again with 0% input.
4) When ZERO value is changed, repeat the above procedure 1) – 3).

MAINTENANCE

Regular calibration procedure is explained below:

■ CALIBRATION

Warm up the unit for at least 10 minutes. Apply 0%, 25%, 50%, 75% and 100% input signal. Check that the output signal for the respective input signal remains within accuracy described in the data sheet. When the output is out of tolerance, recalibrate the unit according to the "ADJUSTMENT PROCEDURE" explained earlier.

LIGHTNING SURGE PROTECTION

M-System offers a series of lightning surge protector for protection against induced lightning surges. Please contact M-System to choose appropriate models.