PDS-1502系列

15″平板显示器

15″ Flat LCD Display

Version: C00

声明

本手册包含的内容并不代表本公司的承诺，本公司保留对此手册更改的权利，且不另行通知。对于任何因安装、使用不当而导致的直接、间接、有意或无意的损坏及隐患概不负责。

EVOC 是研祥智能科技股份有限公司的注册商标。本手册所涉及到的其他商标，其所有权为相应的产品厂家所拥有。

研祥智能科技股份有限公司©2009，版权所有，违者必究。未经许可，不得以机械、电子或其它任何方式进行复制。

安全使用小常识

1. 产品使用前，务必仔细阅读产品说明书；
2. 请勿在指定的电源供应以外操作显示器，使用不正确的电压将会导致故障并可能发生火灾或电击的危险；
3. 请勿拆开机盖使用；
4. 请勿将任何物体插到显示器中；
5. 请勿用湿手触摸插头；
6. 请勿将显示器安装于可能发生温度突变的地点、湿度重、灰尘多或烟雾多的地点；
7. 请保证系统良好的散热与通风；
8. 在您将显示器连接到 PC 上之前，请关闭 PC 与显示器的电源；
9. 在您要移动显示器时，务必关闭电源、拔下显示器插头并将信号电缆拔掉。

目　录

第一章　产品介绍 1
简介 1
环境与机械尺寸 1
电磁兼容性 1
可靠性 1
安全性 2
机械环境适应性 2
运输与贮存要求 2
第二章　安装说明 3
产品外型尺寸图 3
产品外形图 4
第三章　使用说明 7
OSD调整 7
规格 12

第一章　产品介绍

简介

PDS-1502系列显示器是了满足市场需要规划开发的一款15″ LCD 平板显示器。该平板显示器采用15″ LCD屏并增加可选触摸屏功能。具有屏幕亮度、对比度调节和菜单功能；安装方式兼容面板型、壁挂式和VESA标准支撑臂等。

PDS-1502系列显示器是一款高性价比的工业级平板显示器，可广泛应用于电信、电力、多媒体、国防、工业自动化设备、制造业等各领域，用作监控设备。

环境与机械尺寸

- 外形尺寸：400mm（长）×300mm（宽）×40mm（高）
- 工作温度：0℃～50℃
- 相对湿度：5%～95%，40℃(无结露)
- 储存温度：-20℃～+60℃

电磁兼容性

- 符合无线电骚扰限值 GB9254-1998 标准 A 级；
- 抗扰度符合 GB/T17618 标准的限值。

可靠性

- 平均无故障工作时间：MTBF≥5000h；
- 平均维修时间：MTTR≤0.5h。

安全性

- 满足 GB4943 的基本要求。

机械环境适应性

- 抗振动：5-19Hz/1.2mm 振幅；19-200Hz/1.2g 峰-峰加速度；
- 抗冲击：15g 峰-峰加速度，11ms 周期。

运输与贮存要求

- **运输：**

  包装好的产品能以任何交通工具，运往任何地点，在长途运输时不得装在敞开的船舱和车厢中，中途转运时不得存放在露天仓库中，在运输过程中不允许和易燃、易爆、易腐蚀的物品同车（或其他运输工具）装运，并且产品不允许经受雨、雪或液体物质的淋袭与机械损坏。

- **贮存：**

产品贮存时应存放在原包装箱内，存放产品的仓库环境温度为 0～+40℃，相对湿度为 35%～85%。仓库内不允许有各种有害气体、易燃、易爆炸的产品及有腐蚀性的化学物品，并且无强烈的机械振动、冲击和强磁场作用。包装箱应垫离地面至少 10cm，距离墙壁、热源、冷源、窗口或空气入口至少 50cm。

第二章　安装说明

产品外型尺寸图

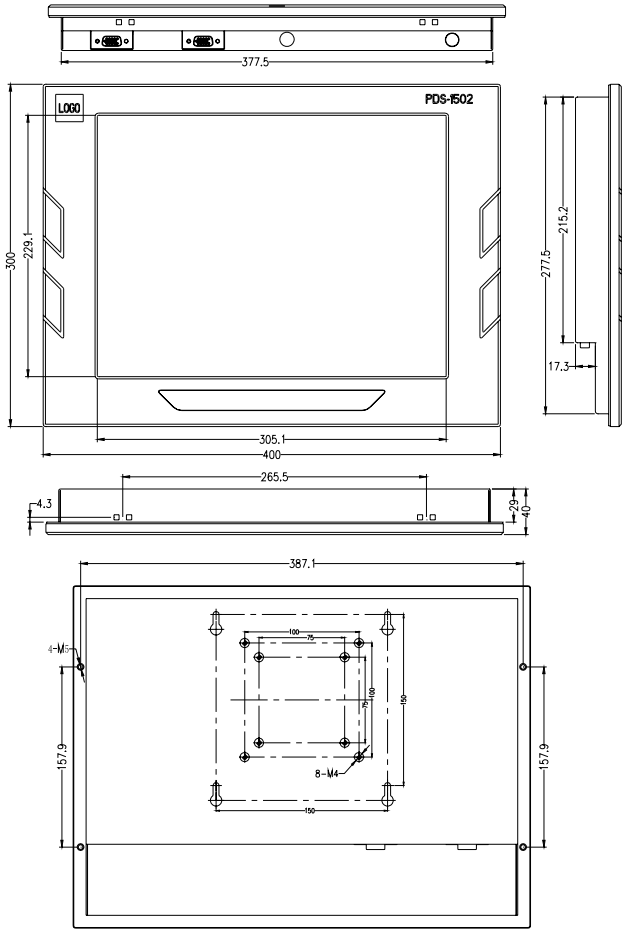

单位：mm

产品外形图

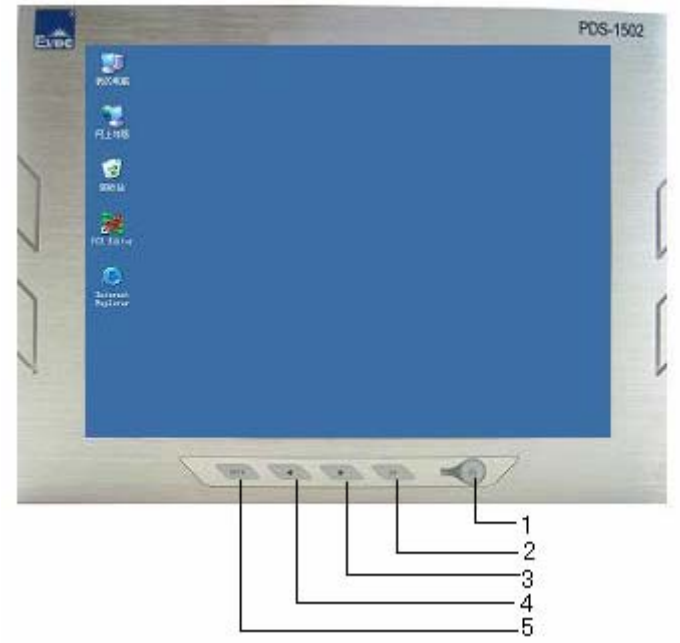

PDS-1502 正面外部控制图

1. 电源指示灯/开关

2. 菜单/选择

3. 亮度

4. 对比度

5. 自动调节/退出

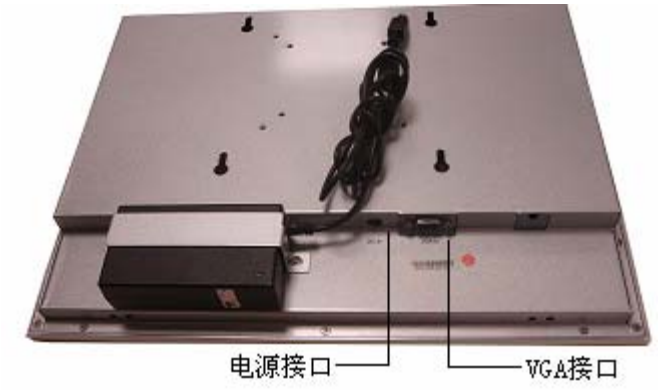

PDS-1502 背面接口图



PDS-1502-L 正面图

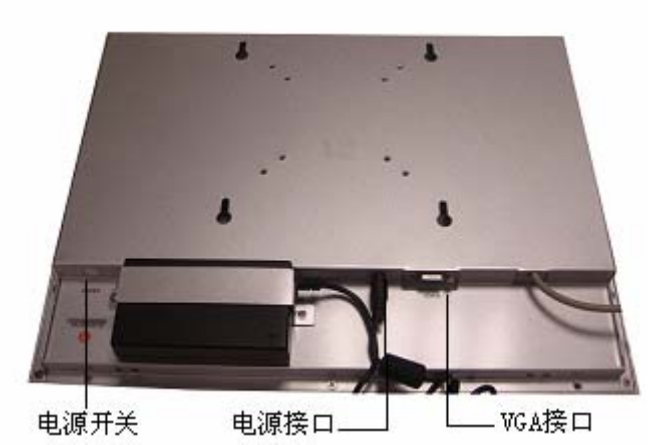

PDS-1502-L 背面接口图

第三章 使用说明

OSD 调整

1. 按键说明

按键	功能
AUTO	自动调节键/退出键；
◀	① 减小选项值； ②快捷键：对比度调节键；
▶	① 增加选项值； ②快捷键：亮度调节键；
OK	① MENU，菜单键； ②保存参数并退出；
⏻	POWER，开关机键；

2. OSD 调节键盘

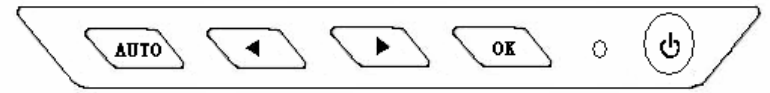

3. 菜单操作及功能介绍

（1）OSD 主菜单功能

	图像	OK 进入下级子菜单，进行图像调节。
	高级	OK 进入下级子菜单，对显示图形进行几何调节。
	语言	OK 进入下级子菜单，进行语言的切换。
	声音	厂家预留
	其他	OK进入下级子菜单，进行其他设置的调节
	退出	OK退出菜单

（2）快捷键

快捷键	功能	描述
◀	对比度调节	◀减小数值，▶增加数值，OK保存参数并退出。
▶	亮度调节	◀减小数值，▶增加数值，OK保存参数并退出。

注：亮度调节仅背光调节。

（3）菜单操作步骤：

◆ 按OK键进入菜单界面。

◆◀/▶选择一级菜单项，OK确认进入一级菜单。

◆◀/▶选择二级菜单项，OK确认进入二级菜单。

◆◀/▶更改选中菜单项的值。

◆退出菜单时自动保存参数值。

（4）OSD主菜单及子菜单

OSD主菜单及子菜单**1**——图像：



按“菜单”键选择主菜单项

◀/▶键调节亮度

◀/▶键调节对比度

◀/▶键调节色温

选中“退出”，按OK 键后退出

二级子菜单——色温

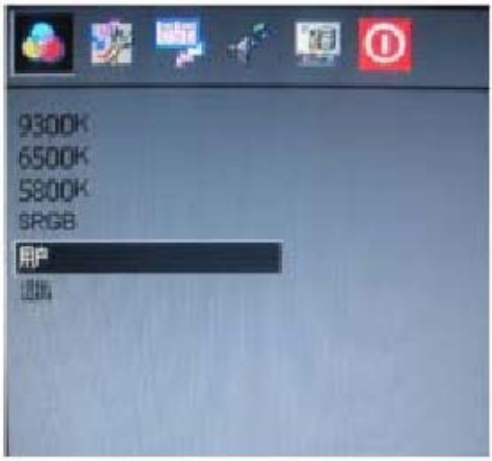

◀/▶键进行选择

OK键进行确认，并退出当前菜单

“用户”部分的操作见备注【1】

选中“退出”，按OK 键后退出

备注【1】：当选择“用户”项后，会对 R、G、B 分别进行调节，调节后 OK 键保存调节值并退出当前操作

子菜单2——高级：



OK 键进行自动调整

OK 键进行色彩自动调整

◀/▶键调节水平位置

◀/▶键调节垂直位置

◀/▶键调节时钟

◀/▶键调节相位

选中“退出”，按OK 键后退出

子菜单 3——语言



◀/▶键进行语言选择
OK键确认
选中“退出”，按OK 键后退出

子菜单4——声音：厂家预留
子菜单5——其他：



复位：恢复出厂设置
背景色：无信号时底色选择
◀/▶键选择自动关机的时间
◀/▶键调节锐度
选中“退出”，按OK 键后退出

子菜单 **6**——退出



选中“退出”， OK 键后退出菜单

规格

LCD 面板	显示设备	TFT 彩色 LCD
	尺寸	38．1 厘米（15 英寸）
	点距	0．297 毫米×0．297 毫米
输入	视频	红、蓝、绿模拟接口
	频率	60Hz～75Hz
最大分辨率	1024×768	
显示颜色	16．7M 种颜色	
功耗	11.5 W（Typ.）@6.5mA	
输入接头	D 型 15 针接头	
电源	100～240V，50～60Hz	
环境温度、湿度	使用温度：0℃～ +50℃	
	储存温度：-20℃～+60℃	
净重量	5kg	
整机尺寸	400mm（长）×300mm（宽）×40mm（高）	

欲获更多信息请访问研祥网站：http://www.evoc.com。

Announcement

What contained in this User Manual does not represent the commitments of EVOC Company. EVOC Company reserves the right to revise this User Manual, without prior notice, and will not be held liable for any direct, indirect, intended or unintended losses and/or hidden dangers due to installation or improper operation.

EVOC is a registered trademark of **EVOC** Intelligent Technology Co., Ltd. All trademarks, registered trademarks, and trade names used in this User Guide are the property of their respective owners.

EVOC Intelligent Technology Co., Ltd. ©2009, Copyright Reserved. No part of this manual can be reproduced in any form or by any means, such as in electronic or mechanical way, without permission in writing from EVOC.

Safety Instructions

1. Please carefully read the users' manual before handling the product;
2. Please do not use the display with power supply exceeding the specified range; improper voltage may cause failure and even the danger of fire or electric shock;
3. Please do not use the display with the cover open;
4. Please do not insert anything into the display;
5. Please do not touch the plug with damp hands;
6. Please do not install the display where temperature might change suddenly, or with great humidity, dust or smog;
7. Please ensure excellent heat dispersion and ventilation for system;
8. Before connecting the display with the PC, please power off the PC and the display;
9. Before moving the display, please make sure it is powered off and the display plug and the signal cable are removed.

Contents

Chapter 1 Product Introduction....1
Overview....1
Environment and Mechanical Dimensions....1
EMC Compliance....1
Reliability....1
Safety....2
Environmental and Mechanical Adaptability....2
Requirements of Transportation and Storage....2
Chapter 2 Installation....3
Product Outline....3
Product Appearance....4
Chapter 3 Instructions....7
OSD Adjustment....7
Specifications....12

Chapter 1 Product Introduction

Overview

PDS-1502 series display is a sort of 15″ LCD flat display, which is planned and developed to meet the market requirement. It adopts 15″ LCD display and adds optional touch screen function. It possesses functions like screen luminance, contrast adjustment and menu function. The way of installation is compatible with panel style, wall-mounted style and VESA standard supporting arm, etc.

PDS-1502 series display is a sort of industrial level flat display with high performance price ratio, which could be widely used in fields like telecommunication, electric power, multimedia, national defense, industrial automation device and manufacturing as monitoring devices.

Environment and Mechanical Dimensions

- Dimension: 400mm (L) × 300mm (W) × 40mm (H)
- Operating Temperature: 0℃ ~ 50℃
- Relative Humidity: 5% ~ 95%, 40℃ (non-condensing)
- Storage Temperature: -20℃ ~ +60℃

EMC Compliance

- Limit of radio disturbance is compliant with GB9254-1998, class A;
- Immunity to disturbance is compliant with the limits of GB/T17618.

Reliability

- MTBF≥5000h;
- MTTR≤0.5h.

Safety

- Meet the requirement of GB4943.

Environmental and Mechanical Adaptability

- Anti-vibration: amplitude 5-19Hz/1.2mm; acceleration 19-200Hz/1.2g peak-to-peak acceleration;
- Anti-shock: 15g peak-to-peak acceleration, duration 11ms.

Requirements of Transportation and Storage

- **Transportation**

Well-packaged products suit for transportation by truck, ship, and plane. During transportation, products should not be put in open cabin or carriage. When transshipping in route, products should not be stored in the open without protection from the atmospheric conditions. Products should not be transported together with inflammable, explosive and corrosive substances and are not allowed to be exposed to rain, snow and liquid substances and mechanical force.

- **Storage**

Products should be stored in package box when it is not used. And warehouse temperature should be 0°C ~ 40°C, and relative humidity is 35%~85%. In the warehouse, there should not be harmful gas, inflammable, explosive products, and corrosive chemical products, and strong mechanical vibration, shock and strong magnetic field affection. The package box should be over ground at least 10cm height, and 50cm away from wall, thermal source, and vent**.**

Chapter 2 Installation

Product Outline

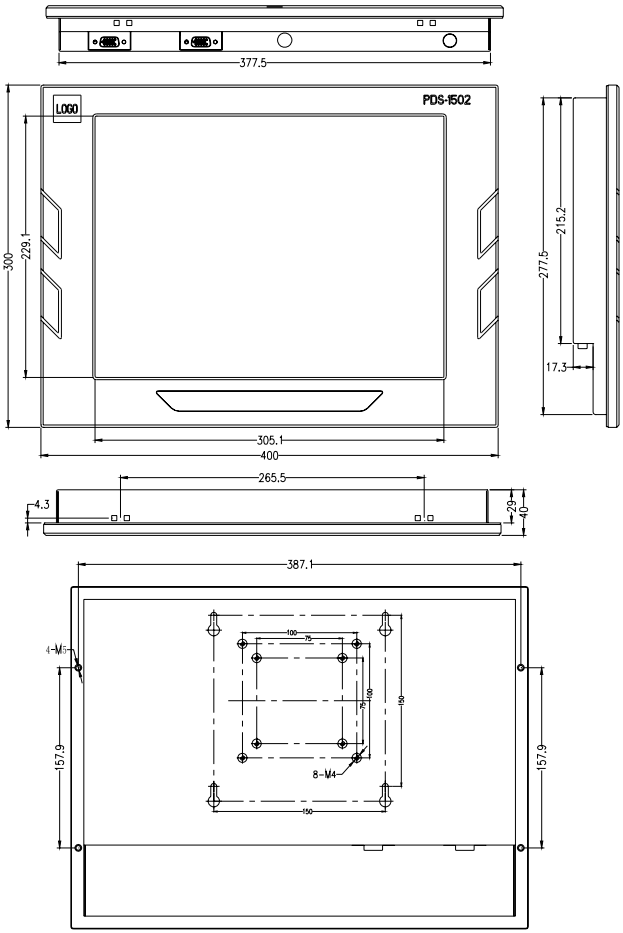

Unit: mm

Product Appearance

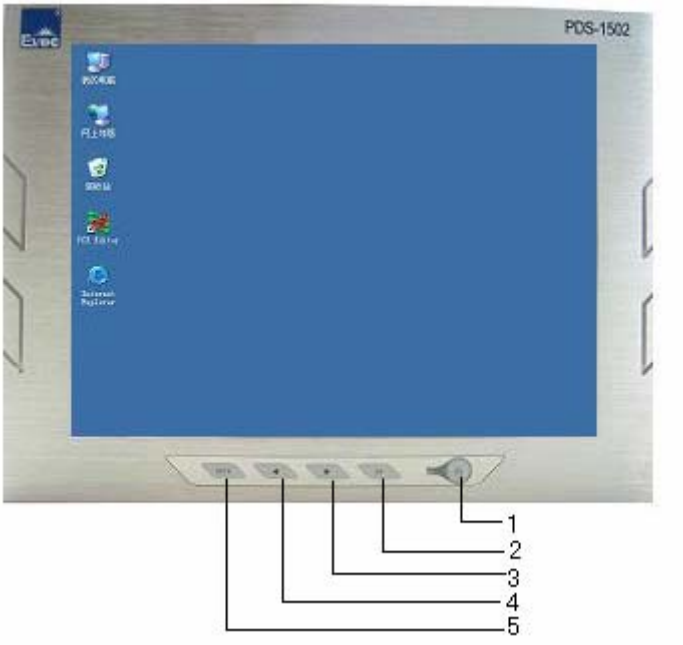

Front View for PDS-1502 External Controlling Interface

1. Power Indicator/Switch
2. Menu/Selection
3. Luminance
4. Contrast
5. Auto Adjust/ Exit

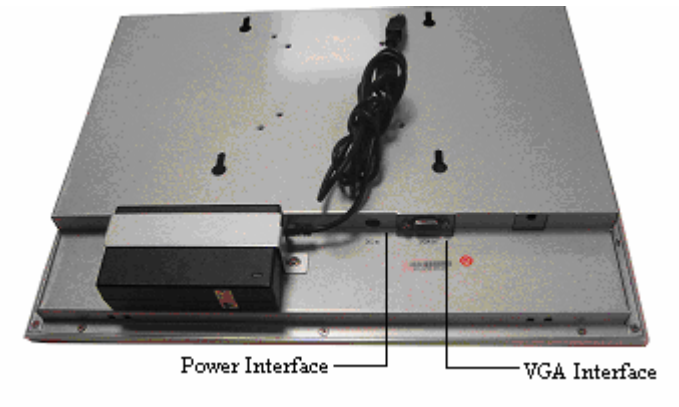

Rear Interfaces for PDS-1502

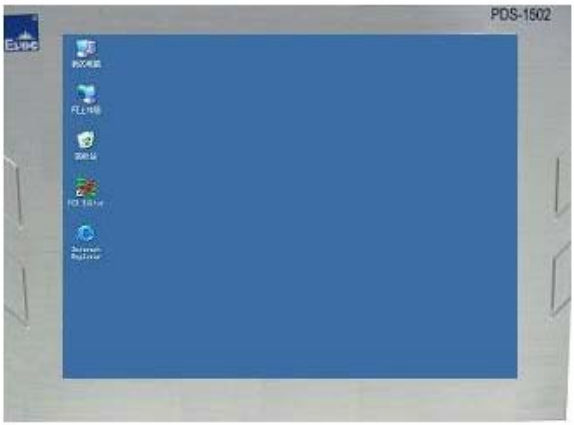

Front View for PDS-1502-L

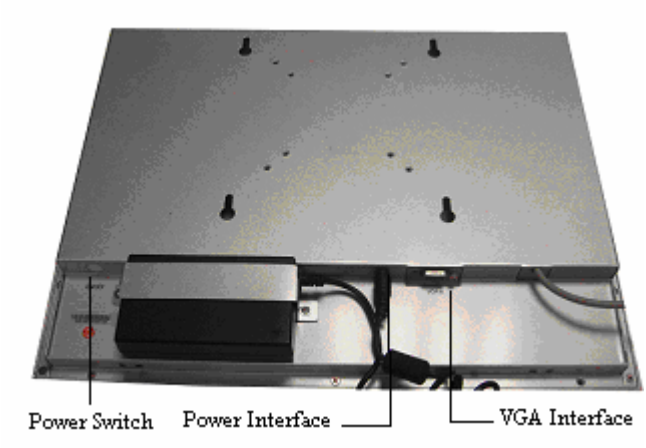

Rear Interfaces for PDS-1502-L

Chapter 3 Instructions

OSD Adjustment

1. Key Description

Key	Function
AUTO	Automatic Adjustment key/Exit key;
◀	① Decrease the option value; ② Shortcut key: Contrast ratio adjustment key;
▶	① Increase the option value; ② Shortcut key: Brightness adjustment key;
OK	① MENU; ② Save the setting and exit;
⏻	POWER, Power-on/off button.

2. OSD Adjustment Keyboard



3. Menu Operation and Function

（1）OSD Main Menu Function

	Graphics	OK Enter into submenu, and adjust the pictures.
	Advanced	OK Enter into submenu, and carry out geometrical adjustment for the graphics.
	Language	OK Enter into submenu, and switch between languages.
	Sound	Reserved by the manufacturer
	Others	OK Enter into submenu, and carry out adjustment for other settings.
	Exit	OK Exit the menu

（2）Shortcut Key

Key	Function	Description
◀	Contrast ratio	◀Decrease, ▶Increase, OK Save the setting and exit.
▶	Brightness	◀Decrease, ▶Increase, OK Save the setting and exit.

Note: Brightness adjustment is only for backlight.

（3）Menu operation steps:

◆ Press OK to enter into Menu interface.

◆◀/▶Select first-level menu option, press OK to confirm entering into first-level menu.

◆◀/▶ Select second-level menu option, press OK to confirm entering into second-level menu.

◆◀/▶Revise the value of selected menu option.

◆Automatically save settings when exiting menu.

（4）OSD Main Menu and Submenu

OSD main menu and submenu 1——Graphics:



Press “Menu” key to select main menu option

◀/▶to adjust brightness

◀/▶ to adjust contrast ratio

◀/▶to adjust color temperature

Select “Exit”, press OK to exit.

Second-level Submenu——Color Temperature

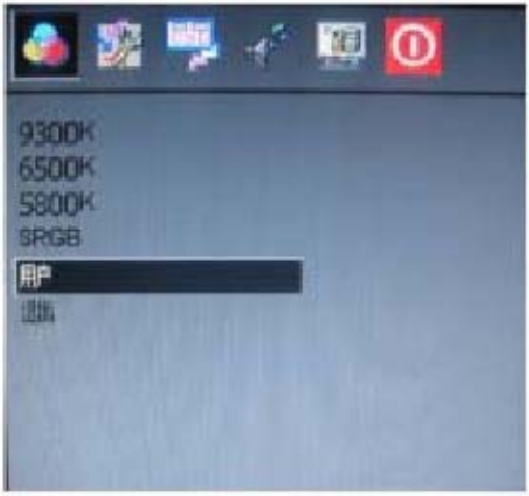

Press ◀/▶ to select
OK to confirm, and exit the current menu.
For the operation method of "User" part, please see Remark【1】
Select "Exit", press OK to exit.

Remark【1】: After "User" option is selected, R, G and B will be adjusted respectively. After the adjustment is finished, press OK to save the value and exit the current operation.

Submenu 2——Advanced:



Press OK for automatic adjustment
Press OK for automatic adjustment of color
◀/▶ to adjust horizontal position
◀/▶to adjust vertical position
◀/▶ to adjust clock.
◀/▶to adjust phase.
Select "Exit", press OK to exit.

Submenu 3——Language



Press ◀/▶ to select language
OK to confirm
Select “Exit”, and press OK to exit.

Submeu 4——Sound: Reserved by the manufacturer

Submenu 5——Others:



Reset: to restore factory default settings
Background color: to select background color when there is no signal
◀/▶ to select time for automatic power-off
◀/▶ to adjust resolution acuity
Select “Exit”, press OK to exit.

Submenu 6——Exit



Select “Exit”, press OK to exit

Specifications

LCD Panel	Display Device	TFT Color LCD
	Dimension	38．1 cm (15 inch)
	Dot Pitch	0.297mm × 0. 297mm
Input	Video Frequency	Red, blue and green analog interface
	Frequency	60Hz - 75Hz
Maximum Resolution	1024 × 768	
Displaying Color	16. 7M colors	
Power Consumption	11.5 W (Typ.) @6.5mA	
Input Connector	D-type 15-pin connector	
Power Supply	100~240V, 50~60Hz	
Environment Temperature and Humidity	Operating Temperature: 0℃ ~ +50℃	
	Storage Temperature: -20℃ ~ +60℃	
Net Weight	5kg	
Dimensions of the Box PC	400mm (L) × 300mm (W) × 40mm (H)	

Please visit our website http://www.evoc.com for more information.