LEADING IN PRODUCTION EFFICIENCY

EcoFlow LPR

Low Pressure Regulator Return

Description

The **Eco**Flow LPR is a low pressure return regulator that has been designed to maintain consistent back pressure in application supply systems. By controlling the fluid pressure to the required working pressure, applicators are protected against pressure surge and pulsation from the material supply, whilst perfect flow characteristics for the application process are ensured. **Eco**Flow LPR is easy to maintain with a 100% tight sealing function and compact dimensions. Typically handled materials are water and solvent-borne paints, varnishes, enamels and lacquers.



Customer Benefits

- Sensitive precision control
- Consistent back pressure in the application supply system
- Large regulation range at high flow rate
- Excellent dynamics during pressure changes
- 100% tight sealing function
- High performance diaphragm
- Easy to maintain
- Tested according to Dürr quality standards
- ATEX Ex II 2G IIA T6

EcoFlow LPR M 14 15 DN25 SST
N26220004

Specification

Weight	3,7 kg
Material Housing	Stainless steel
Material Diaphragm	PTFE/HNBR
Material Valve Disc	Stainless steel
Material Valve Seat	Stainless steel
Connector	EcoTube DN25
Operation	Manual
Viscosity min.	40 mPa.s
Viscosity max	250 mPa.s
Viscosity Testfluid	32 mPa.s
Flowrate Fluid max.	15 l/min (3,96 gal/m)
Fluid Pressure max.	16,0 bar (232 psi)
Control Range Fluid Pressure	1-14 bar (14,5-203 psi)
Operating Temperature min	10 °C (50 °F)
Operating Temperature max	35 °C (95 °F)
ATEX Marking	Ex II 2G IIA T6

Dimensions

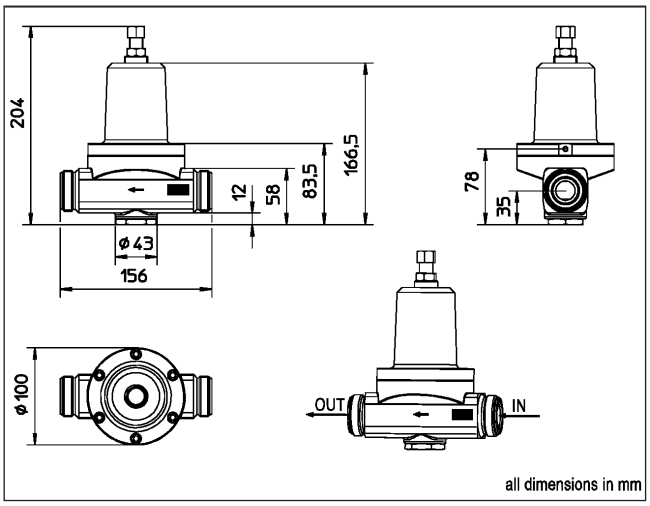

Characteristics

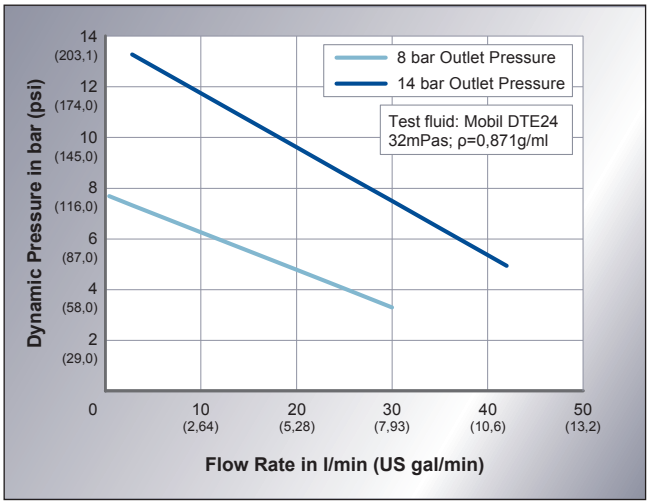

Accessories

Part No.	Description
M08420004	O-Ring

Further Information

If you require further information please do not hesitate to contact our Sales Team at +49 7142 78-0 or Industrial.Products@durr.com

Date of issue May 2015 - ©2015 Dürr Systems GmbH - All rights reserved - Technical changes reserved - Illustrations not obligatory