BNI IOL-800-000-Z037
BNI0087

BALLUFF
sensors worldwide

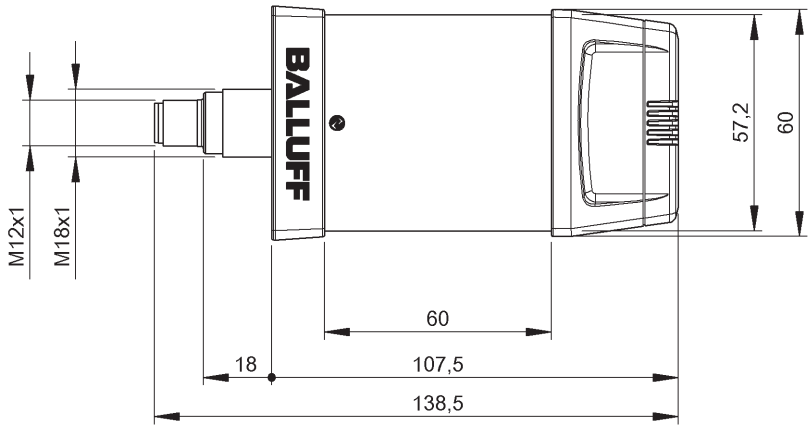

■ **Signal light**

CE

General attributes

Approvals / Conformity	CE
Device description file	Balluff-BNI_IOL-800-000-Z037-20150105-IODD1.1
Enclosure Type per IEC 60529	IP30
Indicator IO-Link comm.	Yes, LED green
Mounting instruction	See short guide
Scope of delivery	Rubber foot Hex-nut M18x1 Circlip Screw M4x6 Short guide

Electrical attributes

Audio frequency	2800 +/- 500 Hz
Beeper function	Yes
Current draw	110 mA @24V
Cycle time min.	5 ms
Dimmable	Yes
Display functions	Chase lighting Stack light
Eff. operating voltage Ue DC	24 V
Indicator modul supply	Yes, LED green
IO-Link	Device
IO-Link Specification	1.1
Life Expectancy	> 50000 h
Operating voltage UB max. DC [V]	30.2 V
Operating voltage UB min. DC [V]	18 V
Predefined colors	yellow white green blue red
Process data cycle	5 ms at cycle time min.
Transfer rate	COM2 (38.4 kBaud)
Volume	> 95 dB/1m

Mechanical attributes

Ambient temperature Ta max.	55 °C
Ambient temperature Ta min.	-5 °C
Digital display	Lightning, freely programmable static, flashing
Fixation of ground cable	M4
Frametype	2.V
Height	60.0 mm
Housing material	Polycarbonate, transparent
Housing shield	Yes
Length	140.0 mm
Mounting type	1-hole screw mounting
Number of colors	7
Number of segments max.	1
Storage temperature max.	50 °C
Storage temperature min.	-25 °C
Surface protection	Cu 15 µ / Ni 15 µ
Width	60.0 mm

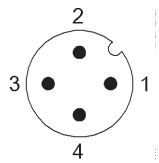

IO -Link
PIN 1: +24V
PIN 2: not used
PIN 3: GND
PIN 4: C/Q, IO-Link DC-Channel