www.swisherinc.com

OWNER'S MANUAL

MODEL NO.

STARTING SERIAL #:
L118-255001

RC14544CP4K
RC14544CP4K-CA



COMMERCIAL PRO 44" BRUSH KING TRAIL CUTTER

IMPORTANT

Read and follow all Safety Precautions and Instructions before operating this equipment.

Assembly
Operation
Service and Adjustment
Repair Parts

SWISHER®

SWISHER ACQUISITION INC.
1602 CORPORATE DRIVE, WARRENSBURG, MISSOURI 64093
PHONE (660) 747-8183 FAX (660) 747-8650

Made In The
USA
of US and Global Parts

8/23/2019

21276 REV 18-255

LIMITED WARRANTY

The manufacturer's warranty to the original consumer purchaser is: This product is free from defects in materials and workmanship for the period's shown below beginning from the date of purchase by the original consumer purchaser. We will repair or replace, at our discretion, parts found to be defective due to materials or workmanship. This warranty is subject to the following limitations and exclusions:

As required by CFR § 1060.120, the fuel system related components, which have been certified to this equipment by SAI are to be free of defects in material and workmanship for a period of two (2) years from the date of purchase by the original consumer purchaser.

1) Engine Warranty All engines utilized on our products have a separate warranty extended to them by the individual engine manufacturer. Any engine service warranty is the responsibility of the engine manufacturer and in no way is Swisher or its agents responsible for the engine warranty. The Kawasaki Engine Service Hotline is 1-877-364-6404 or email kawpower-website@kmc-usa.com

2) Commercial Use This product has a 1yr Limited Commercial - 2 Year Limited Consumer on All Non-Engine Parts from the date of purchase.

3) Limitation This warranty applies only to products, which have been properly assembled, adjusted, and operated in accordance with the instructions contained within this manual. This warranty does not apply to any product of Swisher that has been subject to alteration, misuse, abuse, improper assembly or installation, shipping damage, or to normal wear of the product.

4) Exclusions Excluded from this warranty are normal wear, normal adjustments, and normal maintenance.

In the event you have a claim under this warranty, you must return the product to an authorized service dealer. All transportation charges, damage, or loss incurred during transportation of parts submitted for replacement or repair under this warranty shall be borne by the purchaser. Should you have any questions concerning this warranty, please contact us toll-free at 1-800-222-8183. The model number, serial number, date of purchase, and the name of the authorized Swisher dealer from whom you purchased the Cutter will be needed before any warranty claim can be processed.

THIS WARRANTY DOES NOT APPLY TO ANY INCIDENTAL OR CONSEQUENTIAL DAMAGES AND ANY IMPLIED WARRANTIES ARE LIMITED TO THE SAME TIME PERIODS STATED HEREIN FOR ALL EXPRESSED WARRANTIES. Some states do not allow the limitation of consequential damages or limitations on how long an implied warranty may last, so the above limitations or exclusions may not apply to you. This warranty gives you specific legal rights and you may have other rights, which vary from state-to-state. This is a limited warranty as defined by the Magnuson-Moss Act of 1975.

TABLE OF CONTENTS

- **SAFETY PRECAUTIONS**…… 4
- **KNOW YOUR CUTTER** …… 5
- **GENERAL OPERATIONS**……6-8
  - INTENDED USE
  - ATTACHING TRAIL CUTTER TO TOW VEHICLE
  - STARTING THE ENGINE
  - ENGAGING BLADES
  - STOPPING THE ENGINE
  - BREAKING IN YOUR CUTTER
  - TRANSPORTING CUTTER
  - CUTTER HEIGHT ADJUSTMENT
  - TOW HITCH OFFSET
  - STOPPING THE CUTTING SESSION
  - SUGGESTED CUTTING PRACTICES
- **CUTTER MAINTENANCE**…… 9
  - GENERAL RECOMMENDATIONS
  - BEFORE EACH SEASON
  - BEFORE EACH USE
  - DAILY MAINTENANCE
  - BLADE CARE AND SERVICE
- **TROUBLESHOOTING**…… 10
  - THE ENGINE WILL NOT START
  - ENGINE RUNS POORLY
  - THE UNIT IS NOT CUTTING LEVEL
  - CUTTER BOUNCES EXCESSIVELY WHILE TOWING
  - HITCH WILL NOT PIVOT
- **SPECIFICATIONS**…… 11
- **SAFETY AND OPERATION DECALS**……12
- **ASSEMBLY PARTS**…… 13
- **SET-UP DIRECTIONS**…… 14
- **BATTERY** …… 15
- **BATTERY CABLES** …… 16
- **HEIGHT ADJUSTMENT** …… 17
- **HITCH OPERATION** ……18-19
- **BLADE REPLACEMENT**…… 20
- **BELT REMOVAL/INSTALLATION**…… 21
- **PARTS DIAGRAMS** ……22-29
  - HEIGHT ADJUSTMENT
  - FRONT SKIRTING
  - COVERS
  - ENGINE GUARD, GAS TANK, SOLENOID
  - DECK
  - HITCH
  - BLADE DRIVER
  - ENGINE, PULLEY/BELT
  - IDLER CONFIGURATION
  - CONSOLE
  - WIRING DIAGRAM
- **CALIFORNIA EMMISIONS REQUIREMENTS**…… 30
- **SUGGESTED GUIDE FOR SLOPES** …… 31
- **ORDERING INFORMATION**…… 32

SAFETY PRECAUTIONS

Thank you for choosing Swisher's 44" Trail Cutter. Before operating your Cutter, please read, understand and follow all of the safety precautions and other instructions explained in this manual. As with all power equipment, lawn mowers and Cutters can be potentially dangerous if improperly used.



This Safety Alert Symbol indicates important messages in this manual. When you see this symbol, carefully read the message that follows and be alert to the possibility of personal injury.

Read this manual completely. This machine can amputate hands and feet, and throw objects. Failure to observe the following safety instructions could result in serious injury or death.

- Read the manual. Learn to operate this machine safely.
- Always disconnect the spark plug wire and place the wire where it cannot contact the spark plug, to prevent accidental starting the engine when setting up, transporting, adjusting or making repairs.
- Keep all shields and guards in place.
- Understand the speed, steering and stability of this machine. Know the positions and operations of all controls before you operate this machine. Check all of the controls in a safe area before starting to work with this machine.
- Allow only responsible adults who are familiar with these instructions to operate this machine. **Never allow children to operate this machine.**
- Clear the area of objects such as rocks, toys, wire, etc. that can be picked up and thrown by the blade.
- Be sure the area is clear of other people before mowing. **Stop the machine** if anyone enters the cutting area. Children are often attracted to the machine and the mowing activity. ***Never assume that children will remain where you last saw them*.** Keep children under the watchful care of another responsible adult.
- **No riders!**
- Do not put hands or feet near or under rotating parts.
- Do not mow in reverse. **Always look down and behind before and during backing.**
- Turn off the blades when not cutting. Before leaving the machine, turn off the blades and stop the engine.
- **Watch for traffic** when operating near or crossing roadways.
- Do not operate the Cutter if it has been dropped or damaged in any manner or if the Cutter vibrates excessively. **Excessive vibration is an indication of damage**. Repair Cutter as necessary.
- Dress properly. Do not operate the Cutter when barefoot or wearing open sandals. Wear only solid shoes with good traction when cutting.
- Never allow operation by untrained persons.
- Do not operate the machine while under the influence of alcohol or drugs.
- Do not operate on slopes greater than **15 degrees**.
- Never tamper with safety devices. Check their proper operation regularly.
- Stop and inspect the equipment if you strike an object. Repair, if necessary, before restarting. Never make adjustments or repairs with the engine running.
- Cutter blades are sharp and can cut. Wrap the blades or wear gloves, and use extra caution when servicing them. Do not operate at too fast a rate.

KNOW YOUR CUTTER

It is important to know the features of the Cutter. Please review the entire manual for detailed operational and safety information.

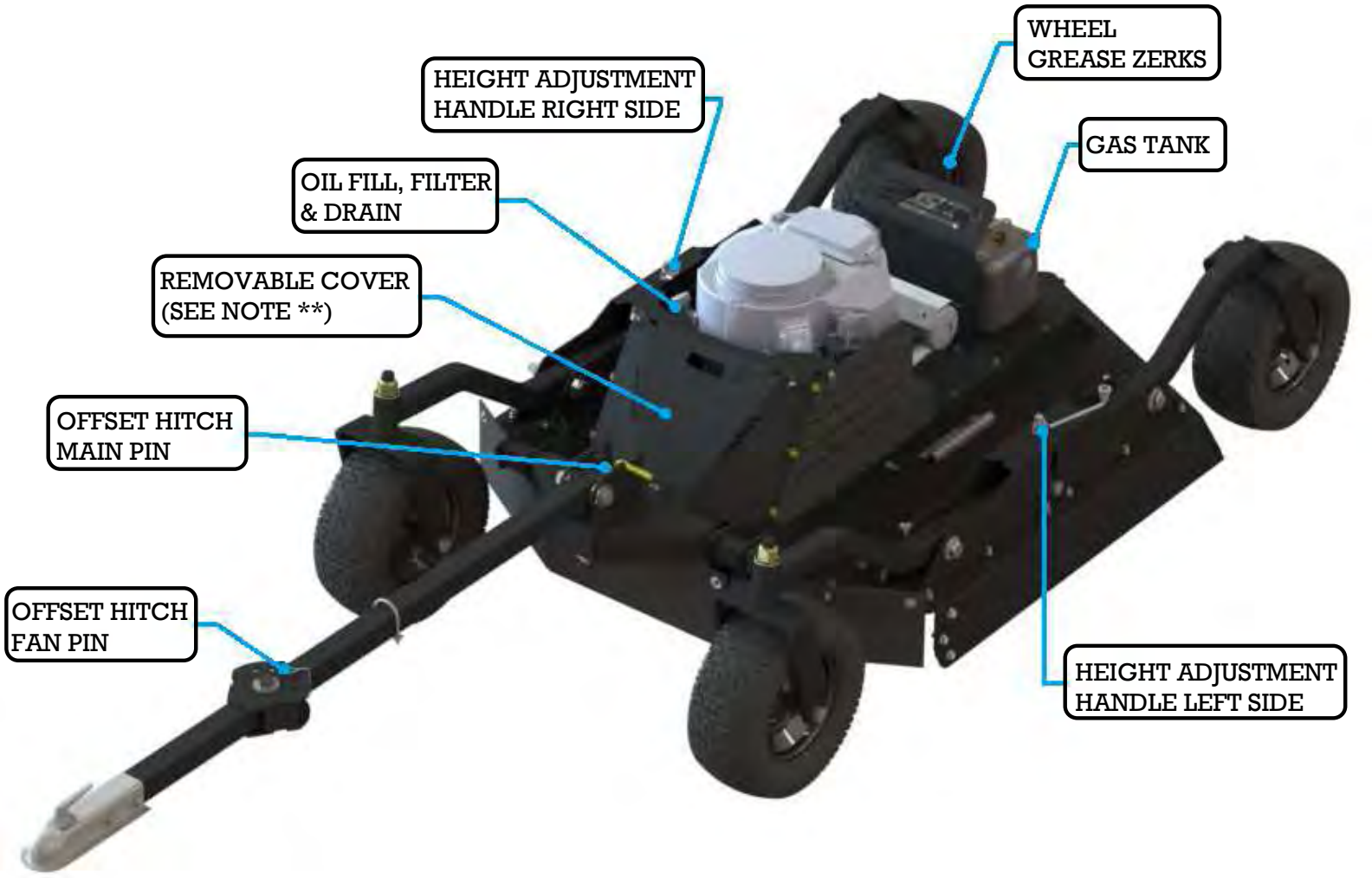

IMPORTANT FEATURES

**** REMOVABLE COVER**

- Battery, Solenoid & Wiring are located under the tool-free removable cover.
- ***Serial Number Tag*** is located next to the battery. Remove cover to access serial number.

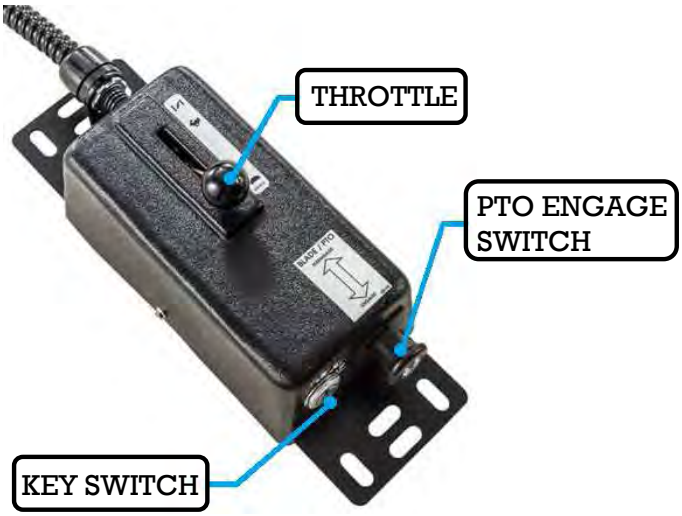

CONTROL CONSOLE

GENERAL OPERATIONS



The operation of any mower can produce foreign objects to be thrown into the eyes, resulting in severe eye damage. Always wear certified safety glasses or wide-vision safety goggles over spectacles before starting any cutting machine and while operating such a machine.



The operation of any mower produces sound waves that are damaging to the human ear. Ear protection is recommended.



CAUTION! Tragic accidents can occur if the operator is not alert to the presence of children. Children are often attracted to the machine and the mowing activity. ***Never assume that children will remain where you last saw them.***

INTENDED USE

The 44" Trail Cutter is designed to clear dense areas of grass and cut saplings up to 3" thick on meadows and small estates. **It is not intended to create a finish cut on lawns**. Your Trail Cutter should be towed behind an ATV, golf cart, lawn tractor or other approved vehicle. It is not recommended for speeds exceeding **5 MPH**.

ATTACHING TRAIL CUTTER TO TOW VEHICLE

- Back vehicle up to desired towing position.
- If an offset is desired, position the Trail Cutter to the side opposite the tow vehicle discharge (if any). This prevents the tow vehicle from throwing grass into Trail Cutter engine.
- Using the 2" ball coupler, connect the hitch to the vehicle your machine will be towed with. Once attached, adjust the level of the Cutter by rotating the adjustment rods. **See pages 17** for detailed instructions.

STARTING THE ENGINE

See engine manufacturer's recommendations for the type and amount of oil and fuel used. Trail Cutters equipped with an electric start engine will need a Battery (sold separately). Swisher recommends using a standard "U1" battery. **See pages 15** for detailed instructions.

- Make sure the tow vehicle parking brake is set, Cutter is level, and blades are disengaged. Engine must be level to accurately check and fill oil. Do not overfill.
- Check spark plug wire, oil, and fuel.
- Check all electrical connections for buildup of debris.
- Set engine throttle to "CHOKE" position.
- Turn key to the "RUN" position, then to the "START" position.
- Set engine throttle at maximum RPM for best performance.
- Allow engine to run a few moments before engaging blades.

GENERAL OPERATIONS

ENGAGING BLADES

Note: Do not attempt to start the unit with the PTO switch in the **"ENGAGED"** position.

- Engage blades by pulling out on the PTO switch.
- Push PTO switch in to disengage blades.
- The braking system is applied when the blades become disengaged. It is designed to bring the blades to a quick stop (approximately 10 seconds). The electric clutch comes with an internal brake.

STOPPING THE ENGINE

- Make sure the tow vehicle parking brake is set.
- Disengage cutting blades.
- Reduce engine to idle speed and allow engine to run momentarily for cooling.
- Turn the key to the off position.

BREAKING IN YOUR CUTTER

- Set the vehicle parking brake and chock the wheels to prevent accidental rolling.
- While engine is running, engage the blade control.
- In a safe environment, (i.e. no children or pets) allow the blades to rotate and the engine to run at full throttle for 5 minutes, breaking in the belt for longer life.
- Disengage the blades and shut off the engine.

TRANSPORTING CUTTER

- Ensure Trail Cutter is turned off.
- Place Trail Cutter deck in its highest position.
- When transporting without the use of a tow vehicle, remove spark plug wire and place it where it cannot contact the spark plug.



CAUTION: SHUT OFF THE CUTTER ENGINE AND REMOVE SPARK PLUG WIRE FROM SPARK PLUG BEFORE MAKING ANY ADJUSTMENTS TO THE CUTTER.

IMPORTANT: This engine is not equipped with a spark arrester muffler. It is a violation of California Public Resource Code Section 4442 to use or operate the engine on any forest-covered, brush-covered, or grass-covered land. Other states or federal areas may have similar laws.

GENERAL OPERATIONS

CUTTER HEIGHT ADJUSTMENT

- There is approximately 4" of height adjustment.
- Rotate height adjust crank handle in a clockwise direction to raise the Cutter deck. Rotate counterclockwise to lower the Cutter deck.
- Using indicator lines located on each side of the Cutter, set each side to the same height.
- Dense areas should be cut twice.
- Place handle down into the notch to lock height position.
- **See Page 18** for more detailed instructions.

TOW HITCH OFFSET

- If towing with a lawn tractor, offset the rough cut Cutter to the opposite side of the lawn tractor grass discharge.
- Swisher recommends if the tow vehicle is equipped with a mid-mount Cutter to overlap the cut approximately 6". This may vary depending on mowing terrain, obstacles, and/or tow vehicle. Always keep safety the first priority.
- **See pages 18 & 19** for detailed instructions.

STOPPING THE CUTTING SESSION

- Bring tow vehicle to a complete stop, set the parking brake and disengage blades.
- Turn key switch to the "OFF" position.
- Always remember to remove keys to avoid irresponsible usage.

SUGGESTED CUTTING PRACTICES

- Operate Cutter engine at full throttle to assure the best cutting performance and maximum material discharge.
- Allow wet grass to dry. Wet grass will clump and collect under the mowing deck.
- Cutter should be started with tow vehicle in low gear and increased only as safe mowing conditions permit. Cutting speed should not exceed 5 MPH.
- Cutting conditions and the types of grass will vary from place to place. You may find when cutting dense areas that the pressure of the wheel tracks may cause the grass to be pushed down and not effectively mowed. If this happens you may want to mow the area twice. Once with the Cutter raised and the second cutting at the desired height. The second cutting should be at a right angle from the previous for best results.
- Reducing the travel speed will help cut dense growth. This allows the blades the time necessary to make its initial cut, and regain momentum to continue cutting. The engine may stall if you are mowing too fast!
- Do not attempt to cut areas that the tow vehicle cannot maneuver through and/or slopes that you do not feel comfortable riding.

CUTTER MAINTENANCE

GENERAL RECOMMENDATIONS

The warranty on this cutter does **not** cover items that have been subjected to operator abuse or negligence. To receive full value from the warranty, operator must maintain unit as instructed in this manual.

Some adjustments will need to be made periodically to maintain your unit properly. Refer to your engine manual for recommended fuel, oil, and service parts.

BEFORE EACH SEASON

A new spark plug and clean air filter assure proper air fuel mixture and help your engine run better and last longer.

- Replace the spark plug.
- Clean or replace the air filter.
- Check blades and belts for wear.
- Add grease to wheel bearings via grease zerks.

BEFORE EACH USE

- Check engine oil level. Do this twice to ensure an accurate reading.
- Check condition of air filter and clean or replace if necessary.
- Check blade operation.
- Check for loose fasteners.
- Lubricate threads of adjustment rods P/N 21271. **See Page 22**.

DAILY MAINTENANCE

Make sure all nuts and bolts are tight and cotter pins and retainer springs are secure.

Keep blades sharp. Observe all safety precautions.

BLADE CARE AND SERVICE

For best results Cutter blades must be kept sharp. The blades can be sharpened with a few strokes of a file or grinding wheel. Do Not attempt to sharpen while on the cutter.

Important: Replace blades that have been damaged or deeply nicked.

Important: Check blade and spindle hardware on a regular basis to make sure nuts are tight.



CAUTION: DO NOT HANDLE CUTTER BLADES WITH BARE HANDS. CARELESS OR IMPROPER HANDLING MAY RESULT IN SERIOUS INJURY.

TROUBLESHOOTING

ISSUE	SOLUTION
Engine Will Not Start	Disengage blades, turn key switch to the “OFF” position, check battery and all other electrical connections and inspect spark plug and wire.
	See Engine Manual for Troubleshooting.
	Contact Engine Manufacturer or Qualified Mechanic.
Engine Runs Poorly	See Engine Manual for Troubleshooting.
	Check the Throttle Adjuster.
	Check Spark Plug and Gap.
	Replace fuel, Check Fuel Filter and Fuel Line.
The Unit is not Cutting Level	Ensure each Height Adjustment is set to the same level.
	Check Tire PSI and for tire/wheel damage.
	Without the engine running, make certain blades are installed identically and not damaged.
The Cutter Bounces Excessively	Decrease Tire Pressure.
	Tow at a Lower Speed.
Hitch Will not Pivot	Check all Hardware and Make Sure Nothing is Overtightened.
	Check for Deformed Pins.
	Make sure all Moving Parts are Free of Debris.
Caster Wheels Wobble Excessively	Check tire pressure. May need to reduce PSI.
	Slighty tighten the nut on top of the caster. Do not Overtighten.
	Reduce Speed.



IF PROBLEMS PERSIST HAVE A QUALIFIED MECHANIC SERVICE THE CUTTER. NEVER ATTEMPT TO MAKE AN ADJUSTMENT THAT YOU ARE NOT SURE IS CORRECT. DOING SO CAN CAUSE OTHER PROBLEMS.

SPECIFICATIONS

	Description
Engine	**14.5HP (603 CC) Kawasaki**
Engine Specifications	See engine Manual for Specifications
Starting	Electric Start
Battery	12 Volt ("U1" recommended)
Fuel	2.5 Gal. (9.46 L), Unleaded Gasoline (Min. 87 Octane) Max. 10% Ethanol
Overall Dimesions	140" L x 46.625" W x 33.25" T
Console Cable Length	10' 4"
Offset Distance (Tow ball to offset cutting edge)	Max 52", Mid 39" (See page 19 for details)
Offset Positions	5 (2 Left, 1 Center, 2 Right)
Cutting Height	3" - 7.5"
Cutting Width	44"
Blade Style	Swing Blade w/ Stump Jumper
Discharge	Rear
Drive System	Belt
Blade Engagement	Electric Clutch
Towing Speed	5 MPH MAX
Mowing Speed	5 MPH (Flat Ground) 4 MPH max (Rough Ground)
Unit Dry Weight	640Lbs. (290 kg)
Tire PSI	20 PSI Recommended (Min. 15 PSI - Max 35 PSI)

Quick Reference - Maintenance Parts

Description	Part Number
Belt - B X 56"	20937
Wheel/Tire - 16/650X8	21262
Bearing - Blade; RT44	4845
Blade - Off-Set, Rough Cut	10358

Note:

- For other part numbers, refer to the Parts Diagrams on pages 22-30.



SAFETY AND OPERATION DECALS

Replace decal immediately if damaged. Order by part number from Swisher. 1-800-222-8183, 8-5 CT M-F

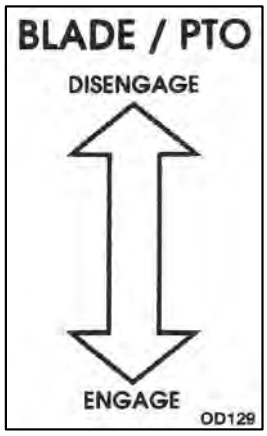

OD129-ENGAGE DECAL



OD29-DANGER DECAL



OD33-5MPH DECAL



OD36-DEFLECTOR DECAL



OD55-DANGER DECAL



OD45-WARNING DECAL



OD28-OFF/RUN/START DECAL



OD99112 LARGE SWISHER LOGO

ASSEMBLY PARTS

Before assembling the Cutter make sure that all assembly parts are present.

Item #	Description	Part #	Qty
1	Key Set (2 Keys)	KSK	1
2	Nut - 1/4-20 Flange	NB524	2
3	Nut - 3/8-16 Nylon-Insert Lock	NB182	2
4	Nut - 3/4-10 Nylon-Insert Lock	21132	1
5	Washer - 3/8 SAE Flat	NB272	4
6	Washer - 3/4" SAE Flat	NB146	2
7	Bolt - 1/4-20 X 3/4"	NB250	2
8	Bolt - 5/16-18 X 1 3/4" Flange Head	NB515	1
9	Bolt - 3/8-16 X 3"	NB150	2
10	Bolt - Serr Flng 5/16-18 X 3"	18580	1
11	Bolt - 3/4 - 10 X 4 1/2"	21130	1
12	Pin - 3/8" X 2.5" Usable, Tab Retainer	21225	1
13	U-Bolt - 1/4-20 X 2", w/ Plate & Nuts	21231	3
14	Pin - 1/2" OD Bent	21257	1
15	2" Ball Coupler	7365	1
16	Plate - Battery Strap	21252	1
17	Weldment - Offset Hitch Tube	21117	1
18	Weldment - Hitch Bar Lower	21256	1
Required Parts Not Included			
19	U1 Battery	N/A	-
Included Parts Not Shown			
-	Tube - Oil Drain, Clear Plastic	AS161	1

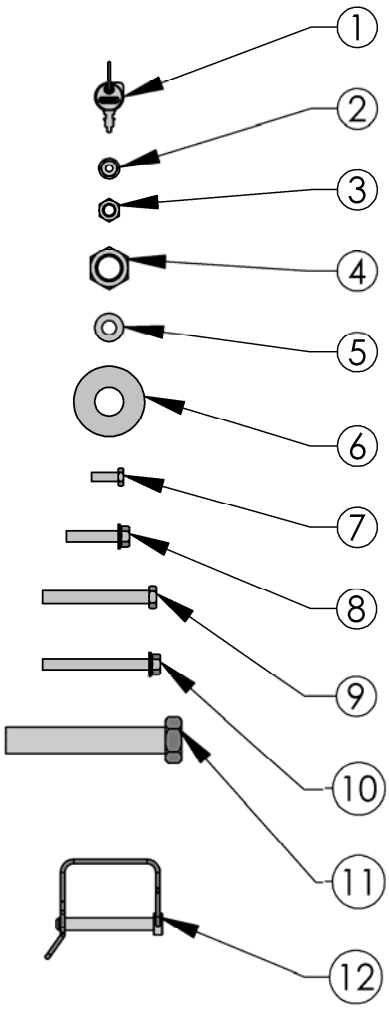

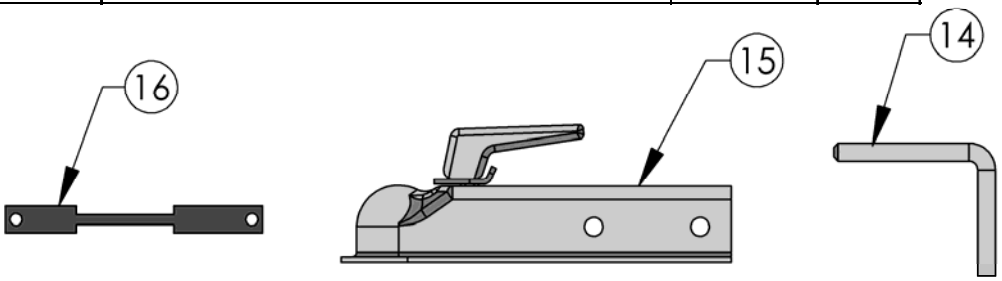

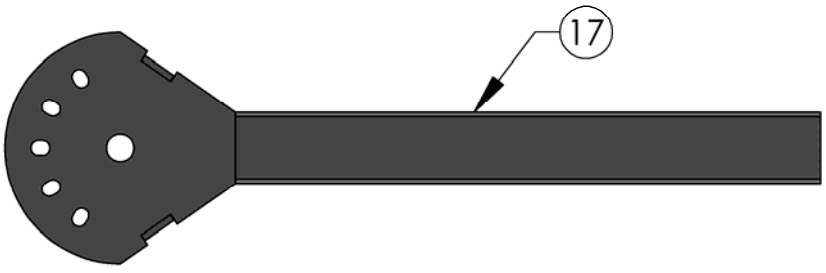

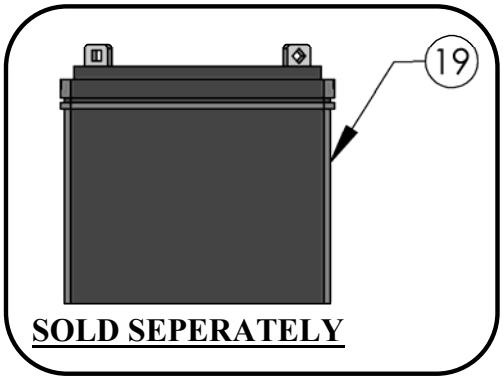

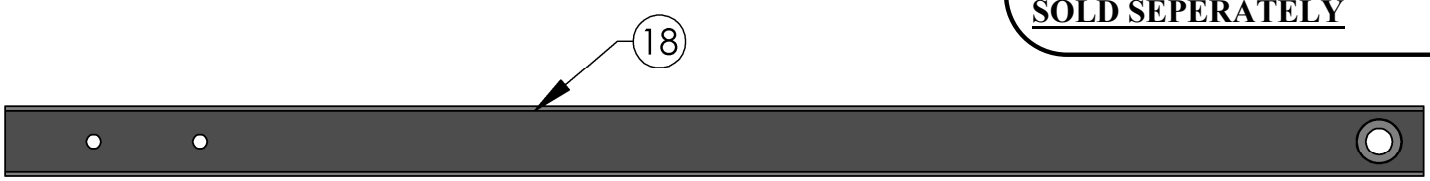

SET-UP DIRECTIONS

Tools Required:

Wrench/Socket

Qty.	Size
(2)	9/16”
(1)	1-1/16”
(1)	1-1/8”
(1)	7/16”

Use care when uncrating.

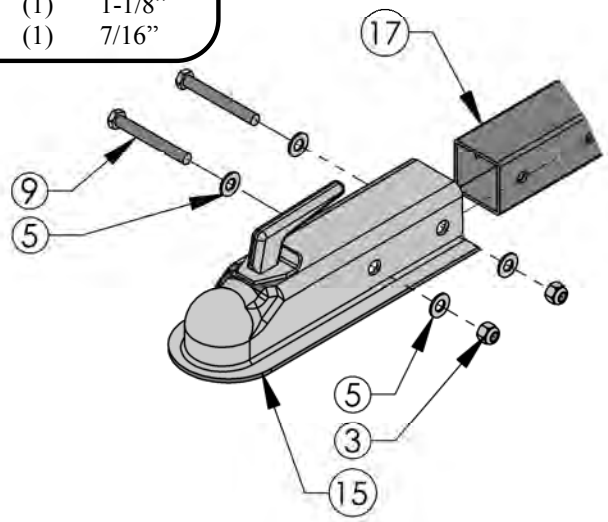

FIGURE 14.1

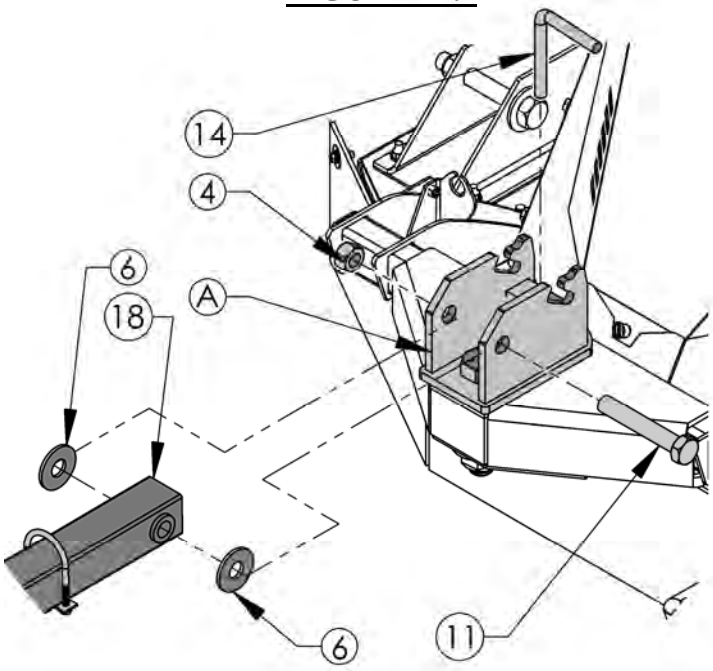

FIGURE 14.2

GENERAL RECOMMENDATIONS

- Use at least two people to uncrate & assemble the unit. The cutter and its components are very heavy.

UNCRATING

- Using a hammer and pry bar, separate the boards of the crate starting with the top. **Use caution to not damage the equipment inside the crate.**
- Always wear gloves and safety glasses when disassembling the crate.

ASSEMBLY DIRECTIONS

1. Check that all parts are present before beginning assembly. **See page 13**
2. Place 2” Coupler (15) over Hitch Bar (17). Fasten as shown using (2) 3/8-16 x 2” Bolts (9), (4) 3/8 washers (5), and (2) 3/8-16 lock nuts (3) .
   FIGURE 14.1
3. Position Hitch Bar (18) into the Hitch Pivot Assembly (A) . Attach the Hitch Bar with (1) ¾-10 x 4 ½” Bolt (11) , (2) ¾ Washers (6) , and (1) ¾-10 Lock Nut (4). Fasten the hardware tightly using one 1-1/8” wrench/socket (bolt) & one 1-1/16” wrench/socket (nut). The Hitch Bar should be able to pivot up and down freely and have no side to side play. If the Hitch Bar will not pivot up and down, loosen the Nut slightly.
   FIGURE 14.2
4. Run the Wire Harness along the top of the Hitch Bar (18)(19) and fasten using the supplied U-bolts (14). **Be sure to leave enough slack at the pivot locations so hitch can freely offset without placing tension on the wire harness**. Dimensions given are just for reference. Actual U-bolt locations may vary by tow vehicle.
   FIGURE 14.3

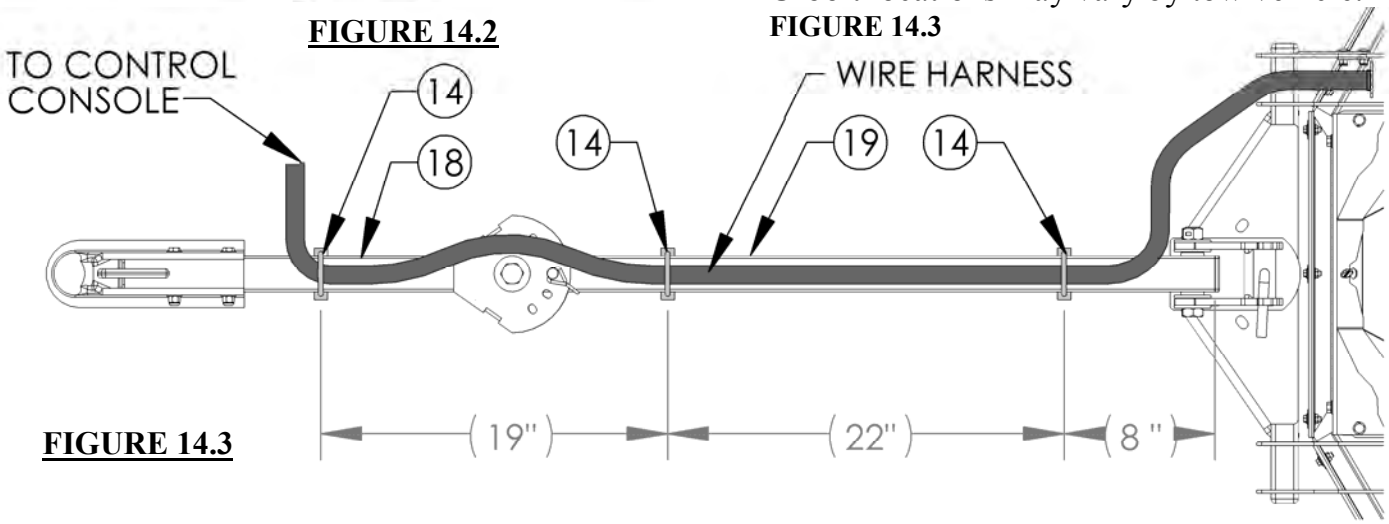

FIGURE 14.3

BATTERY

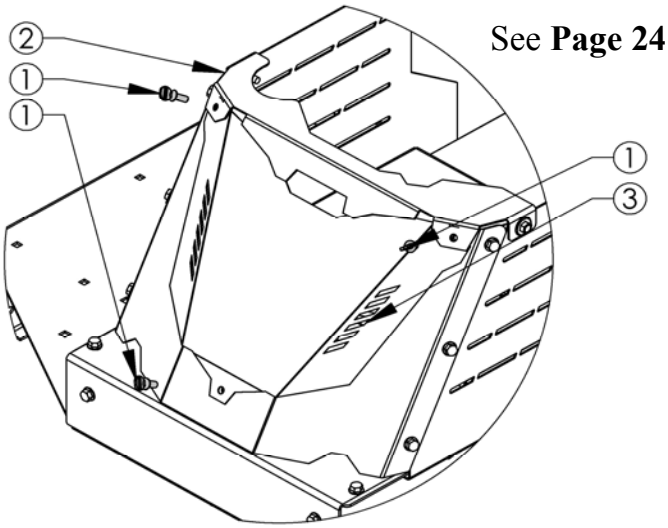

FIGURE 15.1

See **Page 24** for replacement part numbers

Tools Required:

Wrench/Socket

Qty.	Size
(2)	1/2"

Pliers (Optional)

GENERAL RECOMMENDATIONS

- A standard "U1" Battery is recommended. If the Battery is put into service after the "month and year" of the date on the Battery, it may need to be charged with a 12 volt Battery charger for a minimum of 1 hour, but no more than 2 hours at a rate of 6 to 10 amps.
- Use pliers on Thumbscrews if they are too tight to turn by hand. Do not re-tighten with pliers.

INSTALLATION / REMOVAL

- Remove the three Thumbscrews ① holding the Battery Cover as shown in **Figure 15.1**.
- Tilt top Cover ② slightly upward and slide Battery Cover ③ down & out to remove. **Figure 15.2**
- Place U1 Battery into opening. Ensure the three rubber edge guards ⑧ are in place before inserting Battery. **Figure 15.3**
- Lay Battery strap ⑤ over Battery. Insert one 5/16-18 x 1" Bolt ④ thru Battery strap hole near engine and hand thread into the Tinnerman Clip ⑩. Insert 5/8-16 x 3" Bolt ⑥ thru hole in opposite end of strap and thread into Tinnerman Clip ⑨ shown in **Figure 15.3**. Tighten both bolts with ½" wrench being careful not to over tighten and deform the Battery strap.
- For removal of Battery, follow steps in reverse order.
- See **Page 16** for Battery wiring directions

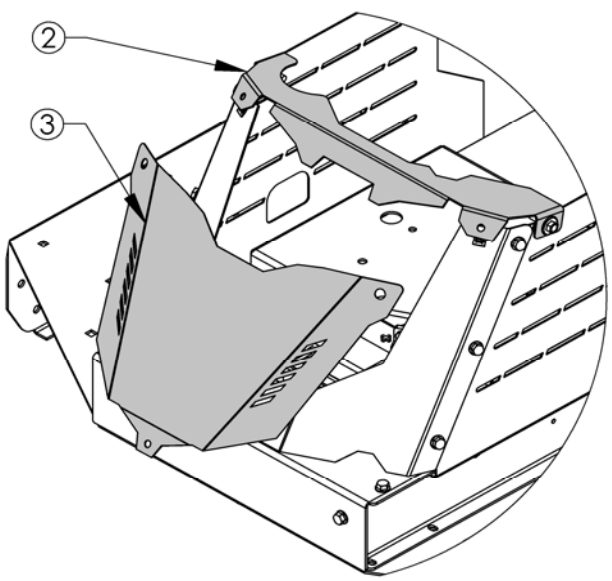

FIGURE 15.2

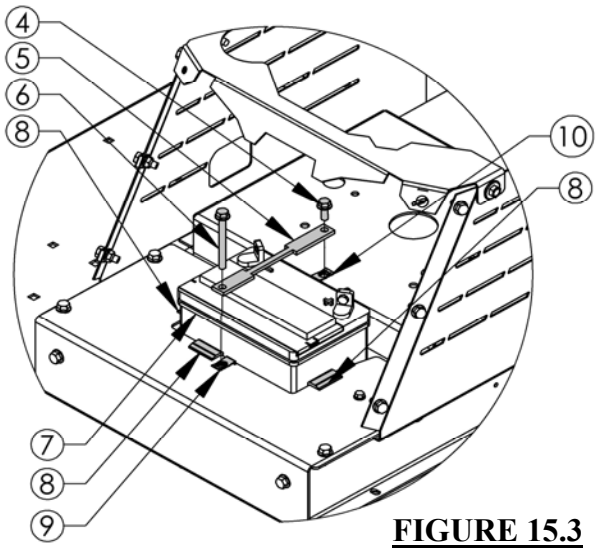

FIGURE 15.3

CAUTION: USE CARE HANDLING BATTERY. CARELESS OR IMPROPER HANDLING MAY RESULT IN SERIOUS INJURY.

BATTERY CABLES

Cutter requires a U1 Battery (not included).

Tools Required:

Wrench/Socket

Qty.	Size
(2)	7/16”

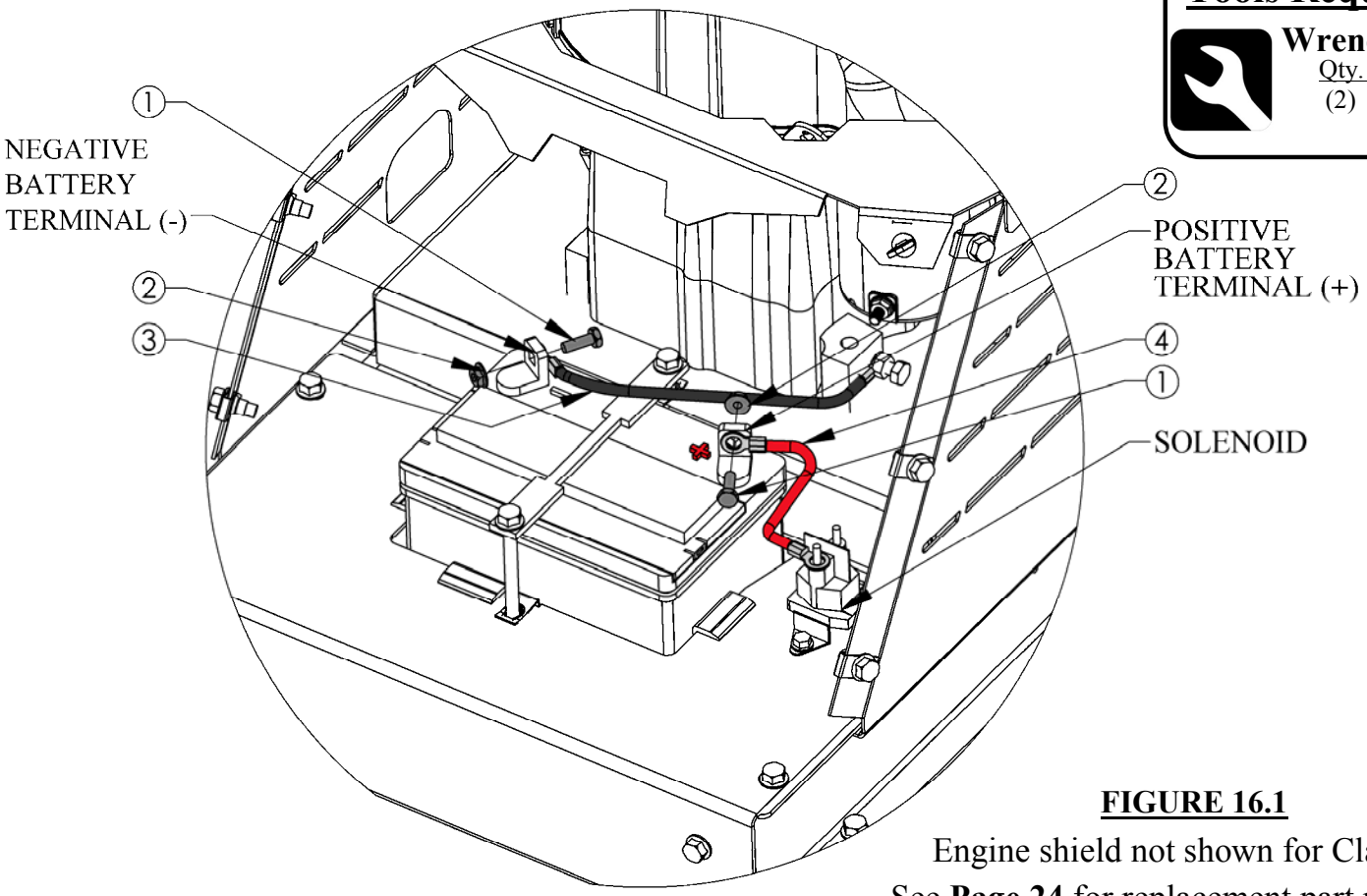

FIGURE 16.1

Engine shield not shown for Clarity

See **Page 24** for replacement part numbers

NOTE: The positive and negative terminals may be in a different location on your Battery than what is shown. Image is for reference only.

BATTERY WIRING

*** ALWAYS CONNECT POSITIVE CABLE FIRST WHEN CONNECTING BATTERY**

*** ALWAYS REMOVE NEGATIVE CABLE FIRST WHEN DISCONNECTING BATTERY**

(See **FIGURE 16.1**)

- Locate (+) Red Cable ④ coming from Solenoid. Attach Red Cable ④ to the (+) positive terminal on Battery and fasten with provided ¼-20 Nut and Bolt ①② using 7/16” wrenches.
- Locate (-) Black Cable ③ and using ¼-20 Nut and Bolt ①② attach it the (-) Battery terminal.
- Replace Cover and fasten with three Thumbscrews previously removed. (See **Page 15**)
- For removal of Battery, follow steps in reverse order.

BATTERY MAINTENANCE

- The Battery can be accessed without tools by removing the Thumbscrews holding on the front Cover.
- Keep Battery charged for best performance. Run unit for at least 45 minutes at a time to properly charge the Battery during use.
- Clean any corrosion build-up from terminal.
- Check terminal bolts for looseness. Tighten if needed.

HEIGHT ADJUSTMENT

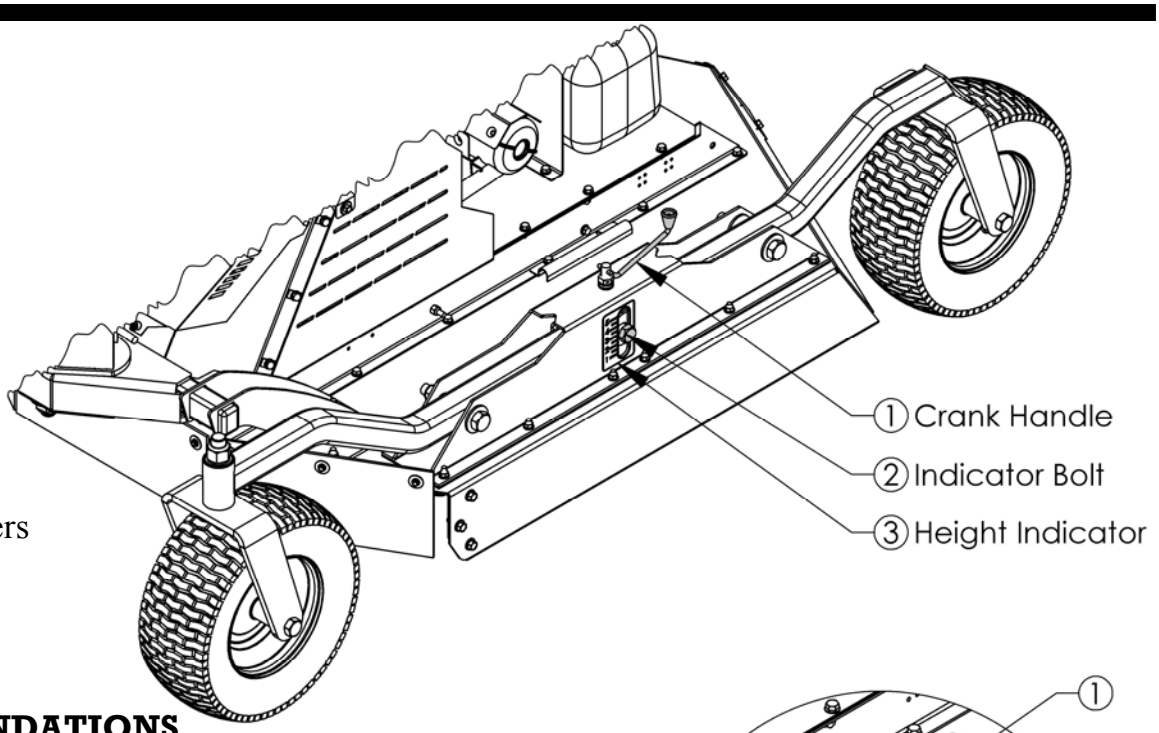

FIGURE 17.1

See **Page 22** for replacement part numbers

GENERAL RECOMMENDATIONS

- Set the Cutter to an appropriate height for the media being cut. Taller/Thicker grass & brush may require a higher first cut and a lower second cut for best results. It's recommended to cut the second pass perpendicular to the first pass.
- Height indicator decal contains number references. These numbers **do not** reflect cutting height or inches. They are only a quick reference to note where the height is set on each side of the unit.

ADJUSTING HEIGHT

- Attach unit to the tow vehicle.
- Find the Crank Handle ① located on either side of the Cutter. **Figure 17.1**
- To **raise** deck - Rotate Handle ① clockwise. **Figure 17.2**
- To **lower** deck – Rotate Handle ① counter-clockwise. **Figure 17.2**
- Lock handle at chosen height by pivoting the handle and placing it into the notch located at either end of the Height Adjustment Housing ④ . **Figure 17.3**
- Take note of the Bolt ② location on the Height indicator Decal ③.
- Repeat steps on opposite side of the Cutter. Ensure Bolt is in the same location on the Height Indicator Decal on both sides. This will help provide a level cut.

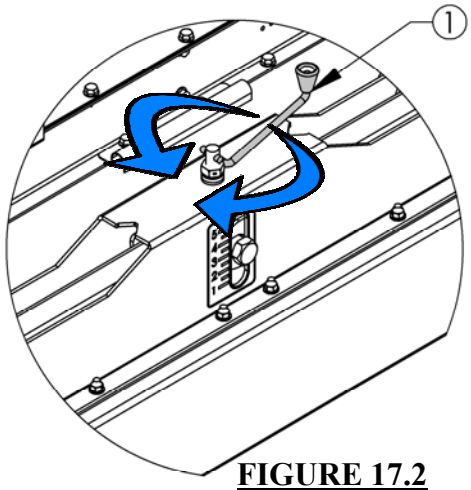

FIGURE 17.2

Unlocked Crank Handle

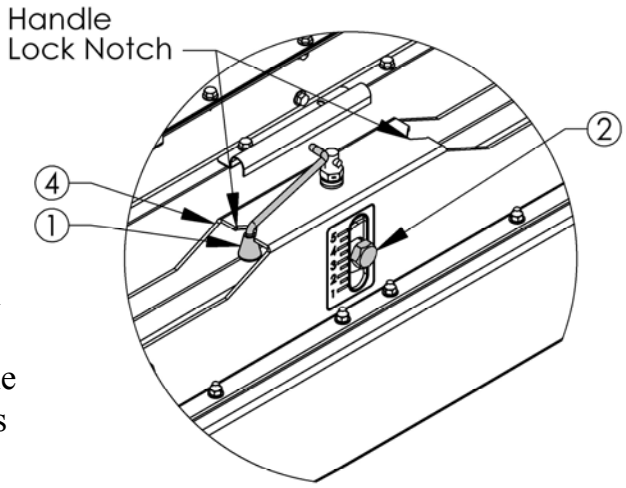

FIGURE 17.3

Locked Crank Handle

HEIGHT ADJUSTMENT MAINTENANCE

- Apply multipurpose grease/oil to Height Adjustment Threaded Rod regularly.
- Ensure all hardware is tight and in place before each use.
- Check tires for low pressure, punctures, or wear.

HITCH OPERATIONS

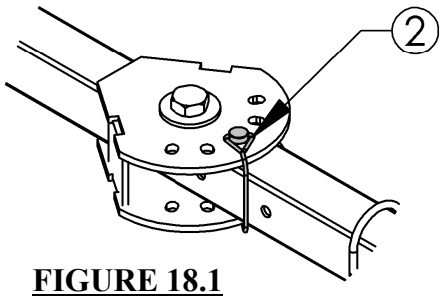

FIGURE 18.1

See **Page 26** for replacement part numbers

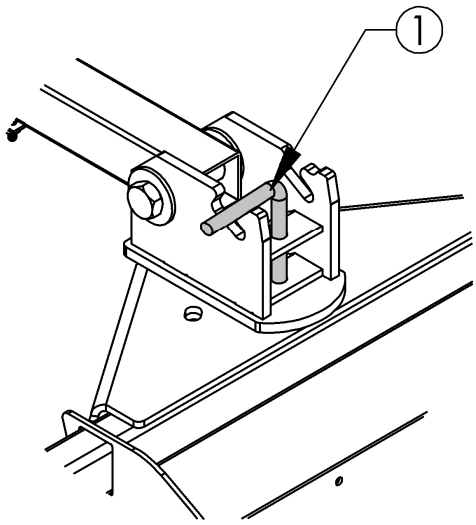

FIGURE 18.2

Unlocked Pin

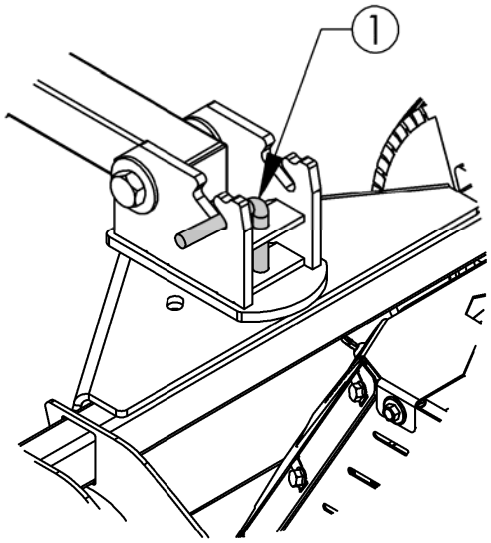

FIGURE 18.3

Locked Pin

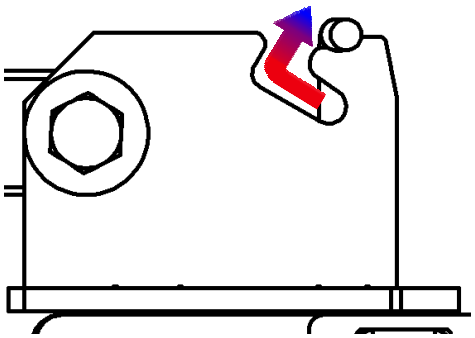

FIGURE 18.4

GENERAL RECOMMENDATIONS

- It is recommended to set the hitch bar in the straight position when an offset is not needed. DO NOT ADJUST HITCH ON HILLS. The Cutter may roll once the pins are removed on a slope. This can cause injury or damage the equipment.
- The unit can be unattached from the tow vehicle for easier adjustment of the hitch. Be sure to detach the console from the tow unit to avoid damage to the wiring harness.

ADJUSTING THE OFFSET

- Place cutting unit on a level area where the Cutter will not roll by itself.
- Unlatch & remove the 3/8" Pin ② located in the center of the Hitch Bar. **Figure 18.1**
- Rotate Hitch Arm until the desired offset location is achieved. Reinstall 3/8" Pin and lock retainer. **Figure 18.1**
- Next, remove the ½" Pin ① by guiding handle of Pin through the slot. The Pin only needs to come out enough to rest on the notch as shown. **Figure 18.4**
- The hitch bar will now be free to rotate to the desired offset side.
- Once the hitch bar is close to the desired offset location, slide the Pin handle back in the slot. To lock the Pin, simply rotate the hitch bar slightly until the Pin falls into place by itself. **Figure 18.3**

HITCH MAINTENANCE

- Apply grease to Hitch pivot points to ensure free movement.
- Ensure all hardware is tight and in place before each use.
- Check locking pins for deformation or damage.

NOTES

- If the locking pins are difficult to remove it may be required to slightly rock the hitch side to side to relieve any pressure that may be on the pins.

See **Page 26** for replacement part numbers

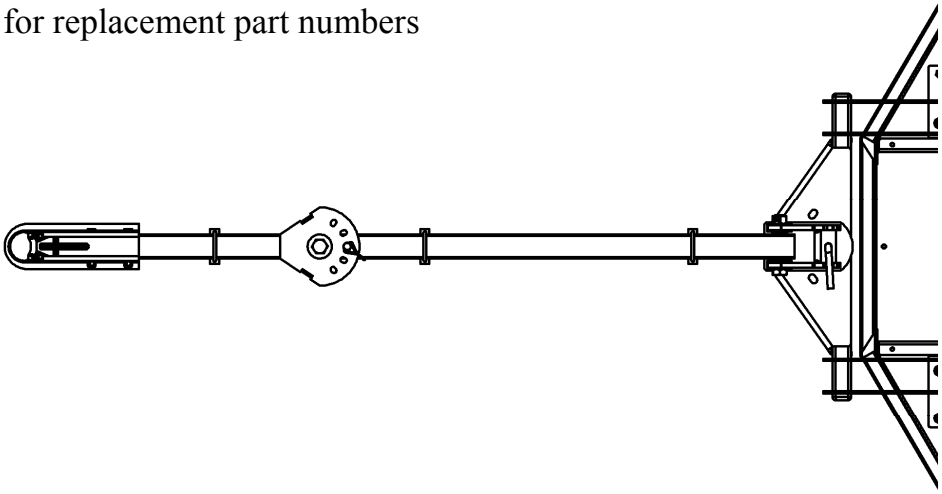

FIGURE 19.1

Centered

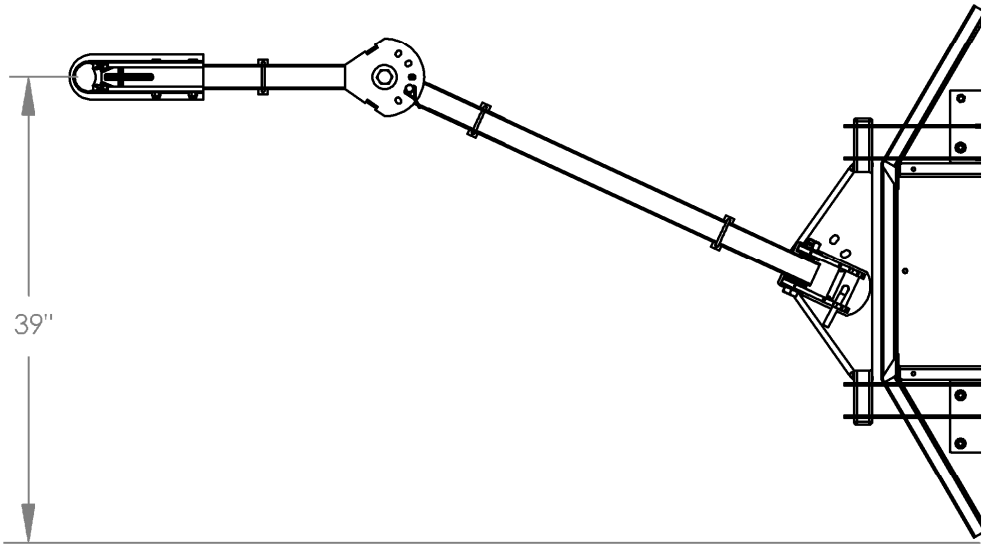

FIGURE 19.2

Mid Offset

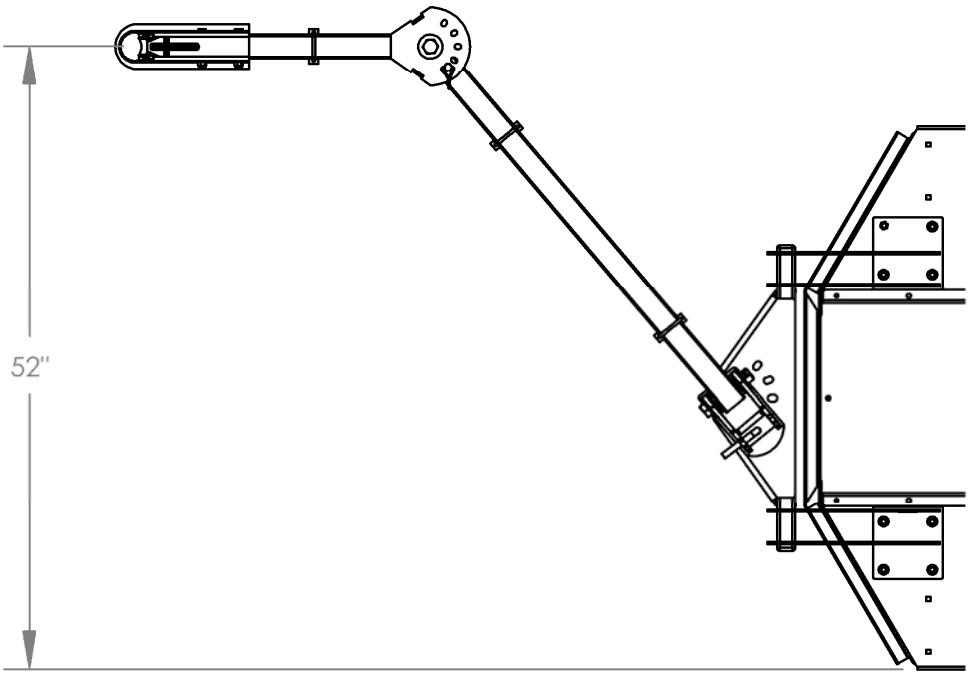

FIGURE 19.3

Max Offset

BLADE REPLACEMENT

Tools Required:

- **Wrench/Socket**

Qty.	Size
(2)	1 1/8”

- **Gloves**

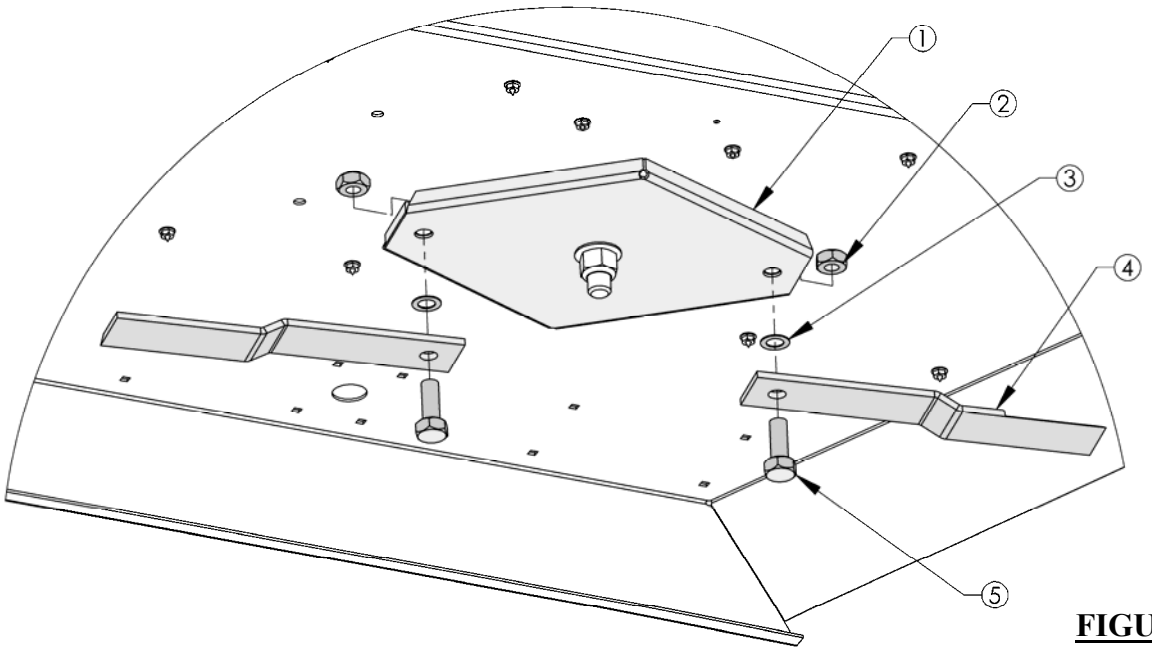

FIGURE 20.1

See **Page 27** for replacement part numbers

Wear gloves when handling the blades and when using tools around the blades. Always be aware of the sharp edges of blades. Use caution when turning wrench to remove & install blade bolts.

BLADE REMOVAL

(See **FIGURE 20.1**)

- Disconnect spark plug wire before working on unit!
- Use Jack Stands or ramps to lift the Cutter off of the ground. Chock the wheels to prevent the Cutter from moving.
- Using the 1-1/8” wrench loosen the Nut② on the top of the Stump Jumper①. After loose, hold nut in place with wrench.
- Using the 1-1/8” wrench/socket remove the Bolt⑤ from the Stump Jumper①. The Blade④ should come off along with the Bolt⑤ and Washer③. Ensure no body parts are under the Blade to avoid possible injury.
- Repeat steps for both blades.

BLADE INSTALLATION

(See **FIGURE 20.1**)

- Hold new/sharpened blade④ and washer③ up to Stump Jumper① and thread the Bolt⑤ into the tapped hole in the Stumper Jumper①.
- Tighten the Bolt until snug. Back off ¼ turn to allow the Swing Blade to pivot freely around the Bolt.
- Hold Bolt with one 1 1/8” wrench and thread the Lock Nut① onto to Bolt and tighten securely against the top of the Stump Jumper using second 1 1/8” wrench.
- Check that Bolt feels tight and that the blade can pivot freely around the Bolt.
- Repeat steps for both blades.

BELT REMOVAL/INSTALLATION

REMOVING BELT

Tools Required:

- **Wrench/Socket**

Qty.	Size
(1)	9/16”
(1)	1/2”

- **Gloves**

(See **FIGURE 21.2**)

- Disconnect negative Battery
- terminal before working on
- the Cutter.
- Locate the six Screws ⑦ securing the Belt Cover⑥. Using the 9/16” wrench/socket, remove the screws.
- Carefully slide Cover to the fuel line side of the Cutter deck and set out of the way of the Blade Pulley ④. **Do not place tension on the fuel lines**.
- Wearing **Gloves**, remove the Belt ⑤ from the Engine Pulley ① and Blade Driver Pulley ④ by rotating the Driver Pulley and rolling the Belt over the edge as you rotate.
- Once the Belt is loose, remove it from the Engine Pulley and remove the Belt from the Cutter.
- If Belt is too difficult to roll off, you may need to loosen the tension of the Idler Pulley ②③. Loosen the Idler Spring Nut ⑧ until the Belt can be removed. Be sure to re-tighten the Nut when the new Belt is installed. Check for proper belt tension after tightening.

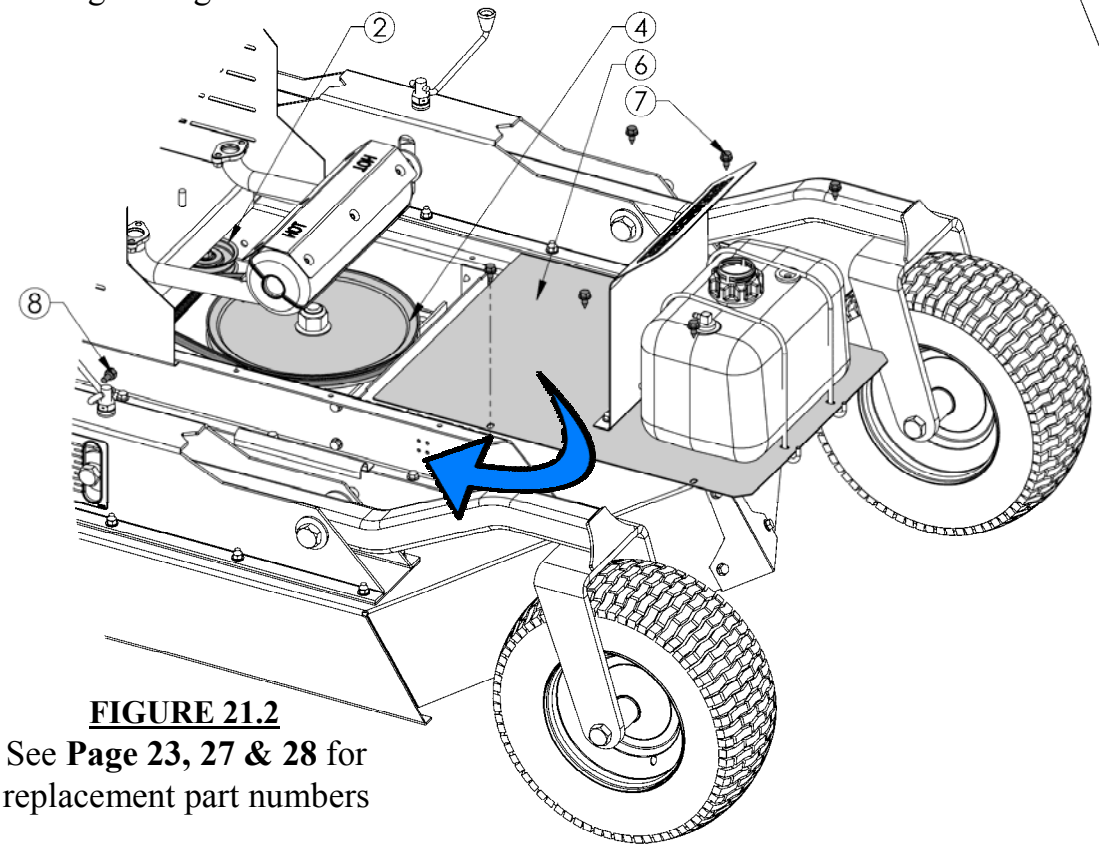

FIGURE 21.2
See **Page 23, 27 & 28** for replacement part numbers

INSTALLING BELT

(See **FIGURE 21.1**)

- Wrap new Belt around the Engine Pulley①.
- Wrap the Belt around the Blade Pulley④.
- Place Belt against Idler Pulley ② and reapply tension to the Idler Spring ③⑧ if required.
- Check to ensure Belt is properly seated on all pulleys.
- Replace Cover and fasten with removed Screws ⑦.

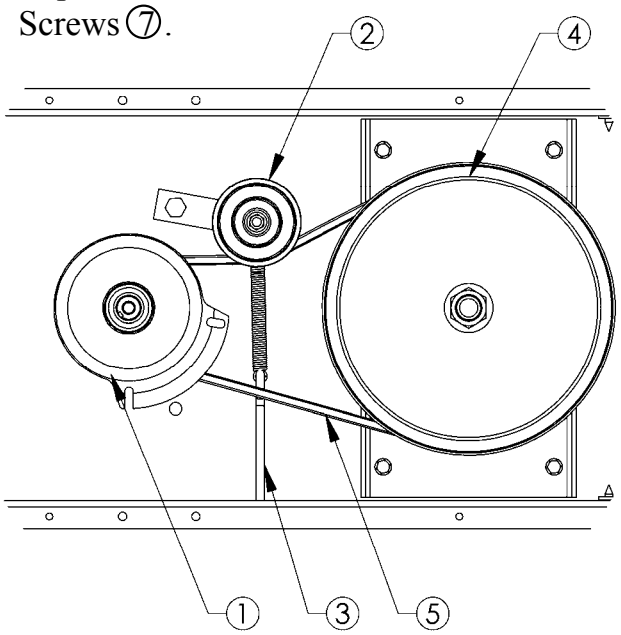

FIGURE 21.1
See **Page 27 & 28** for replacement part numbers

NOTE: Use caution when moving gas tank. Wait until muffler has cooled before attempting work on the belt.

HEIGHT ADJUSTMENT ASSEMBLY

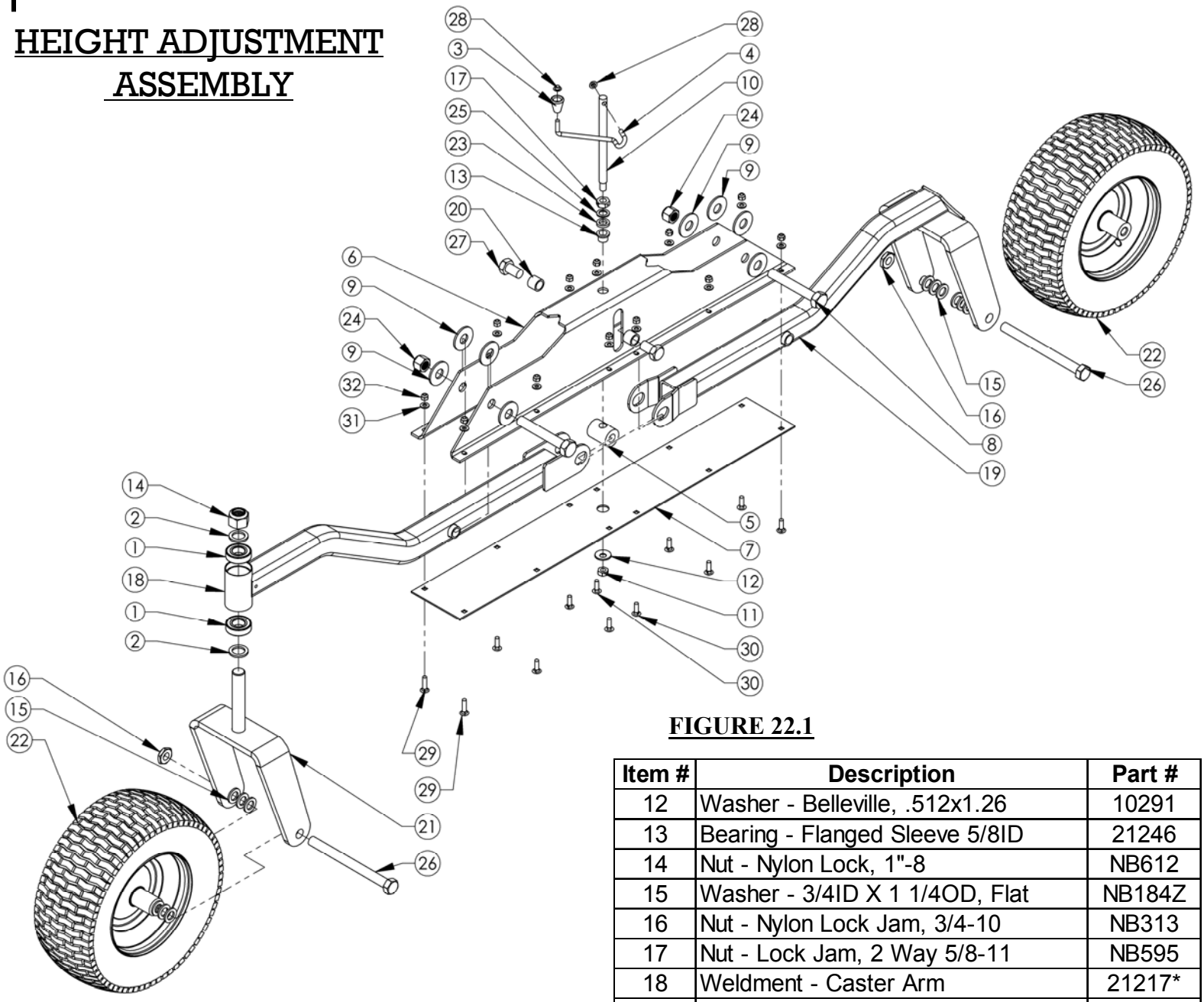

FIGURE 22.1

Item #	Description	Part #
1	Bearing - Blade, RT44	4845
2	Washer - 1 X 1 1/2 10 GA	NB614H
3	Knob - Height Adjustment	H7K
4	Rod - Crank, .313" OD	21270
5	Bar - Center Pivot Threaded	21243Z
6	Bracket - Height Adjustment	21224*
7	Plate - Bottom Cover Base	21223*
8	Bolt - Hex 3/4-10 X 5"	NB243
9	Washer - 3/4" SAE Flat	NB146
10	Rod - Dual Thread, 5/8-11, 1/2-13	21271
11	Nut - 1/2-13 2-Way Jam Lock	NB121

Item #	Description	Part #
12	Washer - Belleville, .512x1.26	10291
13	Bearing - Flanged Sleeve 5/8ID	21246
14	Nut - Nylon Lock, 1"-8	NB612
15	Washer - 3/4ID X 1 1/4OD, Flat	NB184Z
16	Nut - Nylon Lock Jam, 3/4-10	NB313
17	Nut - Lock Jam, 2 Way 5/8-11	NB595
18	Weldment - Caster Arm	21217*
19	Weldment - Rigid Wheel Arm	21220*
20	Tube - Height Adjust Bushing	21245Z
21	Weldment - Caster Assembly	21258*
22	Wheel/Tire - 16/650X8, W/Sealant	21262
23	Washer - HDPE, Ø5/8" ID	21269
24	Nut - Nylon Lock, 3/4"-10	21132
25	Washer - 5/8 ID X 1 OD 14 GA	NB149
26	Bolt - Hex 3/4-10 X 8 1/2"	21272
27	Bolt - Hex 3/4"- 16 X 1 1/4"	21228
28	Nut - Push, 5/16	NB117
29	Bolt - Carriage 5/16-18 x 1 1/4	10217
30	Bolt - Carriage 5/16-18 x 1	10197
31	Washer - 5/16 SAE Flat	NB275
32	Nut - Nylon Lock, 5/16-18	NB181

Note: Some parts not shown for clarity.

When ordering replacement parts
* = USE PAINT CODE: TK=BLACK

PARTS DIAGRAMS

FRONT SKIRT ASSEMBLY

Item #	Description	Part #
1	Nut - Serr Flange, 1/4-20	NB524
2	Debris Guard - Outer	21233
3	Washer - Fender, 1/4X1 1/4OD	11520
4	Bolt - Serr Flange, 1/4-20 X 3/4	NB690
5	Debris Guard - Center	21234
6	Bolt - Carriage, 1/4-20	10547
7	Plate - Harness, Mount Support	21274*
8	Plate - Harness, Cable Support	21260*
9	Nut - Nylon Lock, 1/4-20	NB180

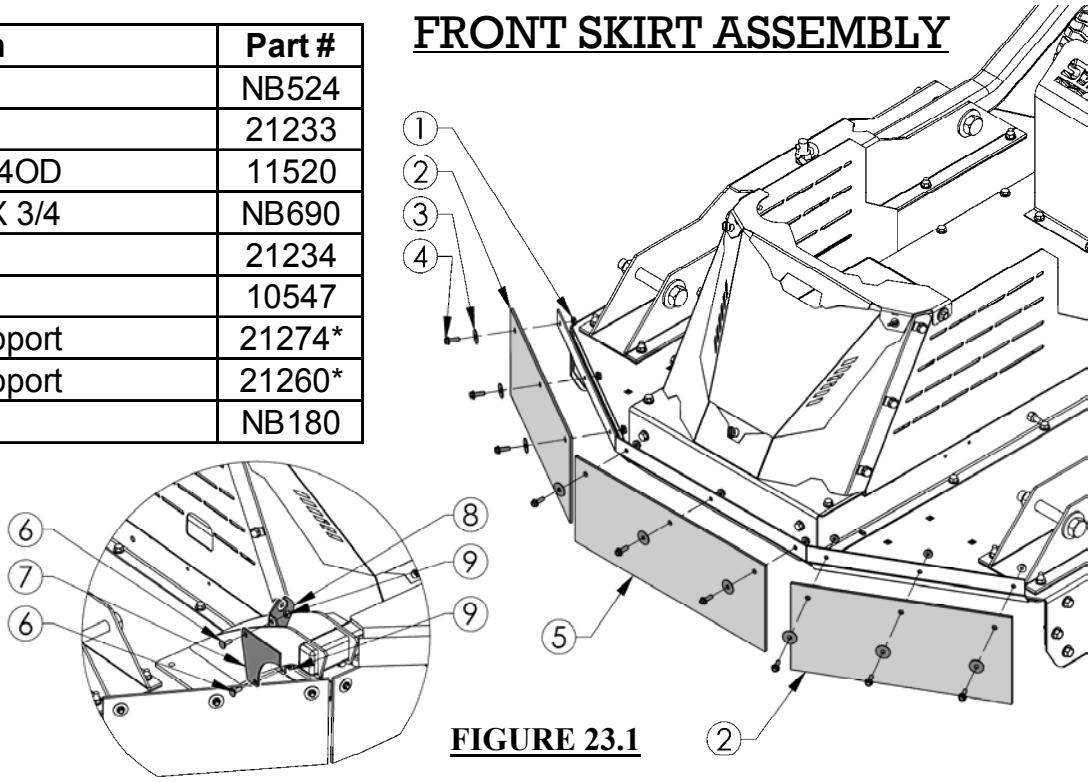

FIGURE 23.1

COVERS

Item #	Description	Part #
1	Screw - .312-18 x .75, Black	26X249
2	Bolt - Serr. Flange, 5/16-18	10548
3	Weldment - Motor Mount	21248*
4	Plate - Battery Mount	21268*
5	Nut - Serr. Flange, 5/16-18	NB170
6	Guard - Fuel Tank	20938*
7	Cover - Gas Tank Mount	21249*

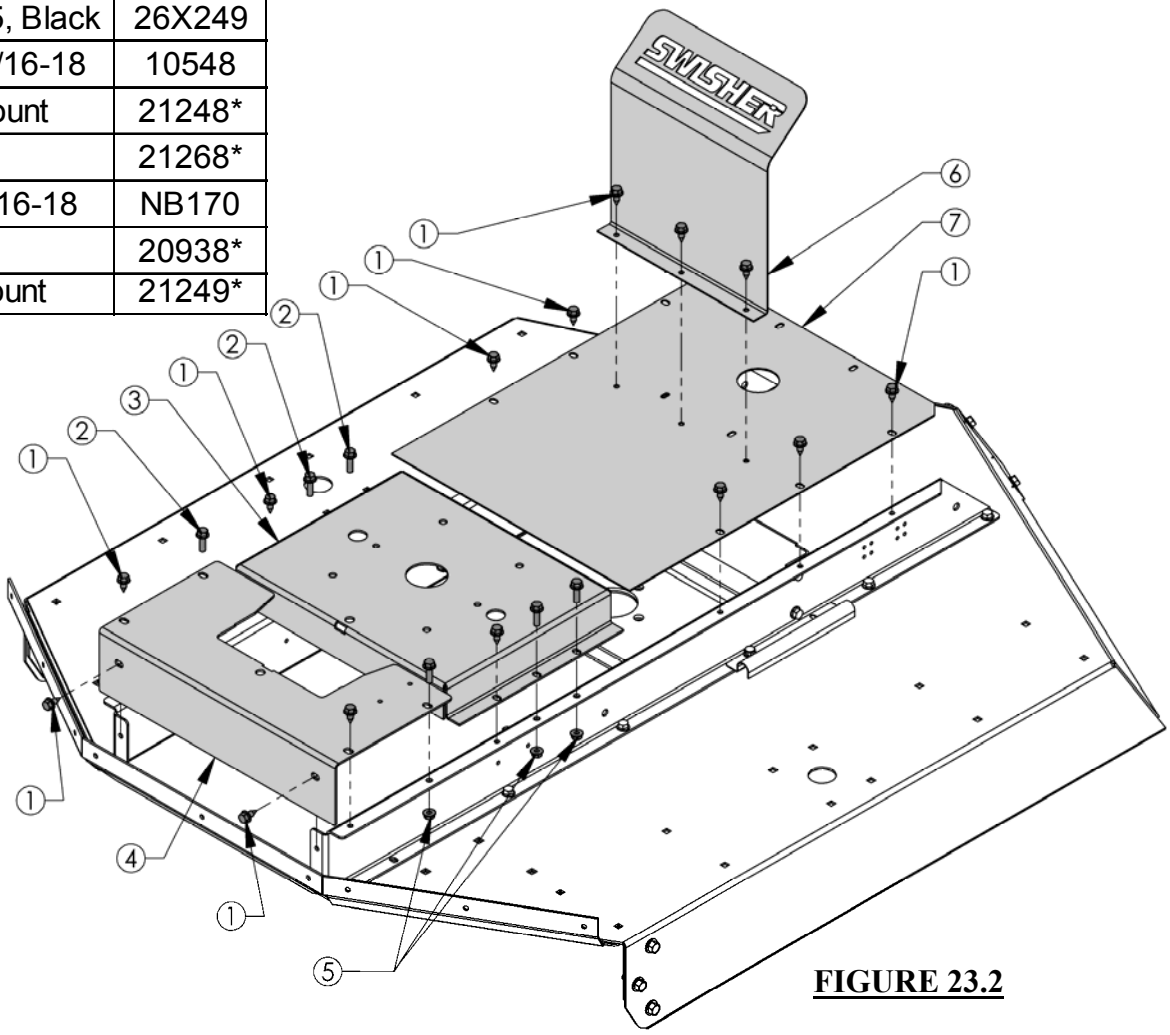

FIGURE 23.2

Note: Some parts not shown for clarity.

When ordering replacement parts
* = USE PAINT CODE: TK=BLACK

ENGINE GUARD,GAS TANK, SOLENOID ASSEMBLIES

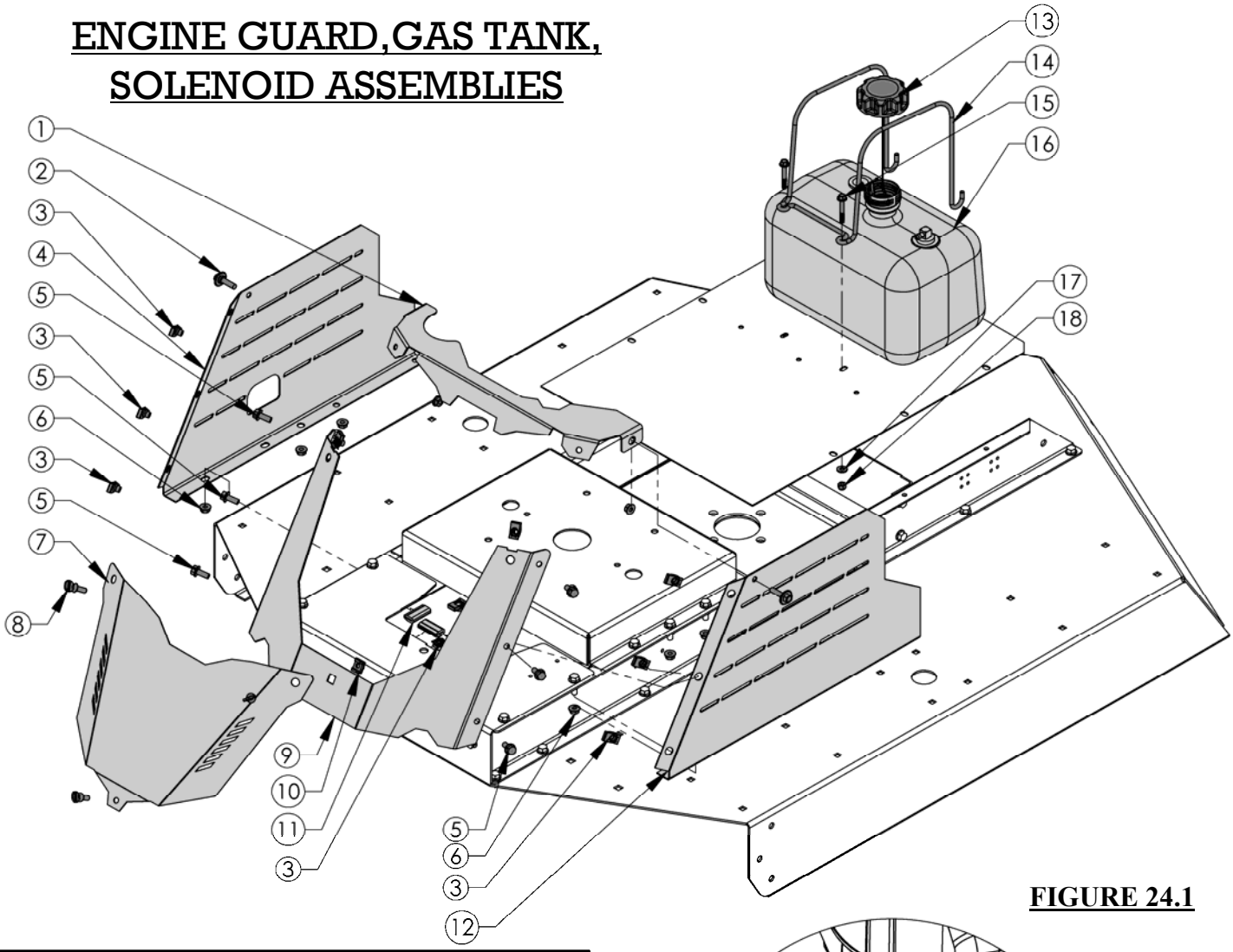

FIGURE 24.1

Item #	Description	Part #
1	Cover - RC Engine Guard	21263*
2	Bolt - Shoulder, 5/16-18	NB743
3	Clip - Tinnerman, 5/16-18	3706
4	Guard - Engine Right Side	21267*
5	Bolt - Serr. Flange, 5/16-18	NB596
6	Nut - Serr. Flange, 5/16-18	NB170
7	Guard - Battery Access Panel	21264*
8	Screw - Thumb, Shoulder; 5/16-18	18802
9	Guard - RC Engine	21265*
10	Cage Nut - 5/16-18	21087
11	Edge Trim - TrimLok, Black, 2"	AS116
12	Guard - Engine Left Side	21266*
13	Cap - Fuel Tank, Carb Sealed	18221
14	Bracket - Fuel Tank	18225
15	Bolt - Serr. Flange, 1/4-20	18236
16	Fuel Tank - 2.5 Gallon	18214
17	Washer - 1/4 SAE Flat	NB274
18	Nut - Nylon Lock, 1/4-20	NB180
19	Bolt - Serr. Flange 5/16-18 x 1 3/4"	NB515
20	Bolt - Serr. Flange, 5/16-18	18580

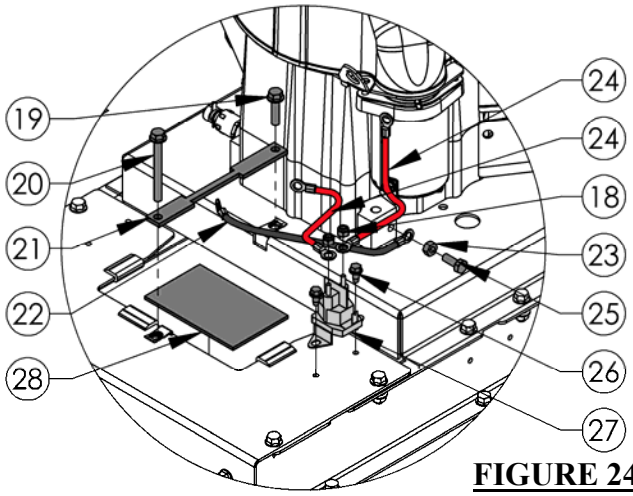

FIGURE 24.2

Item #	Description	Part #
21	Plate - Battery Strap	21252*
22	Cable - Black	BCS
23	Nut - M8-1.25	NB718
24	Cable - Red	BCSR
25	Bolt - M8-1.25 X 20mm	NB719
26	Bolt - TCS 1/4-20 X 1/2	NB114
27	Solenoid - 3 Pole	1002004
28	Battery Pad	BATPAD

When ordering replacement parts
* = USE PAINT CODE: TK=BLACK

Note: Some parts not shown for clarity.

DECK ASSEMBLY

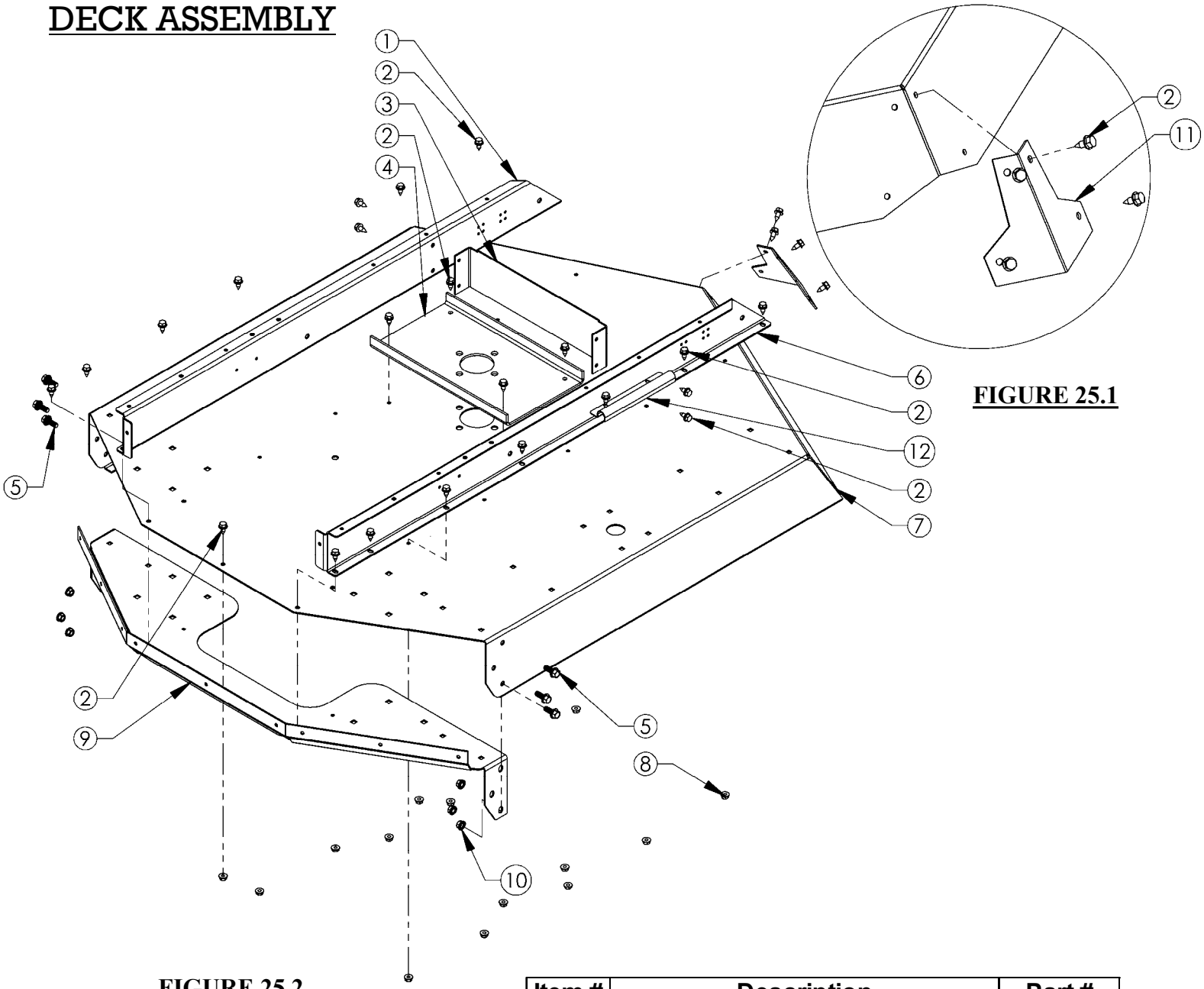

FIGURE 25.1

FIGURE 25.2

Item #	Description	Part #
1	Plate - Motor Mount Rail Right	21251*
2	Screw - .312-18 X .75, Black	26X249
3	Brace - Rear Z-Rail	16371*
4	Plate - Blade Support	15058*
5	Bolt - Serr. Flange, 3/8-16	13964
6	Plate - Motor Mount Rail Left	21250*
7	Weldment - Deck Body	21230*
8	Nut - Serr. Flange, 5/16-18	NB170
9	Plate - Debris Guard Support	21226
10	Nut - Serr. Flange, 3/8-16	19799
11	Plate - Rear Deck Reinforce	21242*
12	Shield - Heat, Fuel Line	6052*

Note: Some parts not shown for clarity.

When ordering replacement parts
* = USE PAINT CODE: TK=BLACK

HITCH ASSEMBLY

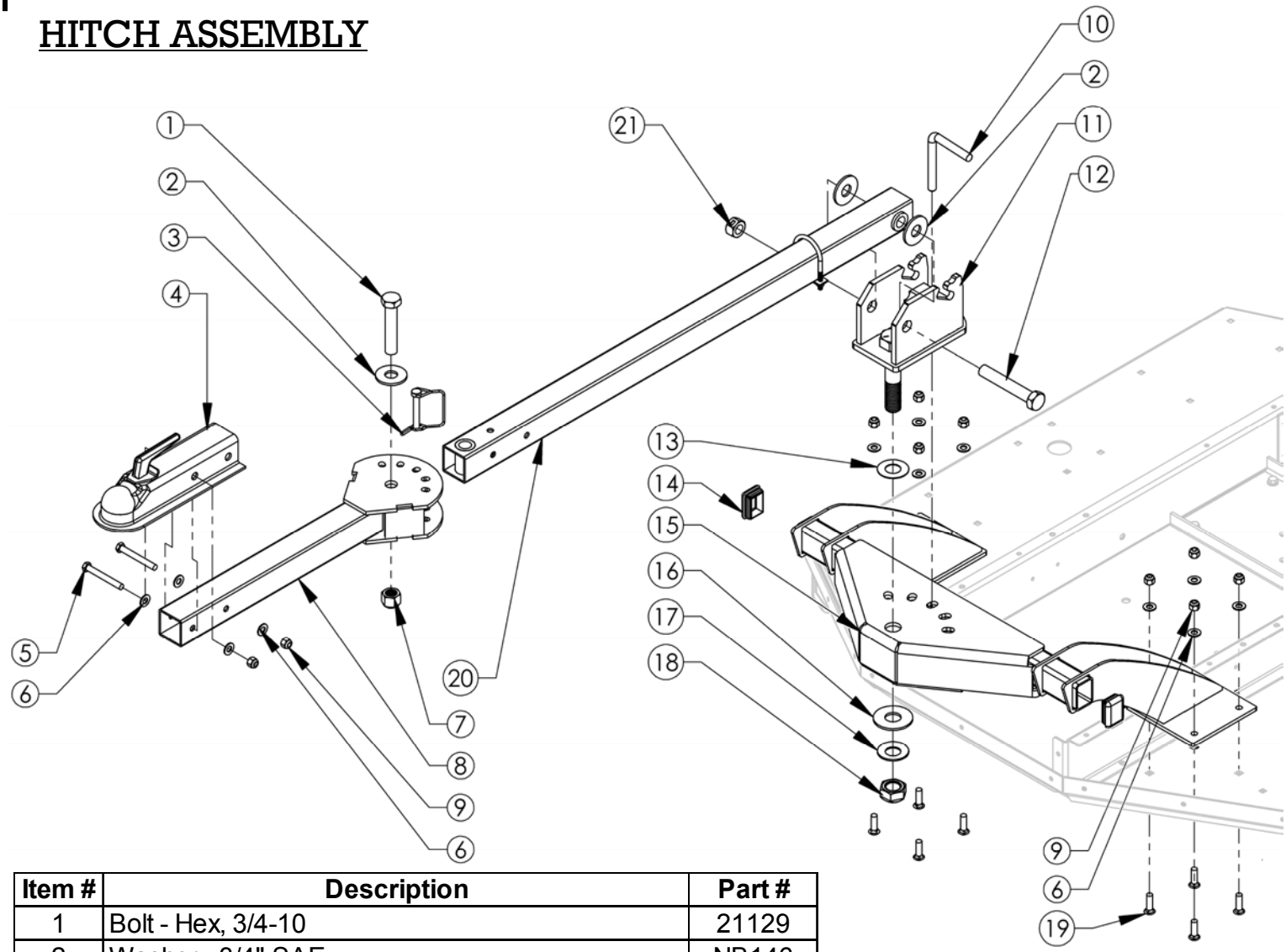

Item #	Description	Part #
1	Bolt - Hex, 3/4-10	21129
2	Washer - 3/4" SAE	NB146
3	Pin - 3/8", Tab Retainer	21225
4	2" Ball Coupler	7365
5	Bolt - Hex, 3/8-16	NB150
6	Washer - 3/8" SAE	NB272
7	Nut - Nylon Lock, 3/4-10	21132
8	Weldment - Offset Hitch Tube	21117*
9	Nut - Nylon Lock, 3/8-16	NB182
10	Pin - Pivot Latch	21257Z
11	Weldment - Hitch Pivot Assembly	21253*
12	Bolt - Hex, 3/4-10	21130
13	Bushing - Machine; 1" ID X 2" OD X .048" Thck	21121
14	Plug - 1 1/2" X 2" , Plastic	21127
15	Hitch - Weldment Assembly	21235*
16	Washer - USS Flat, Ø1"	NB569
17	Washer - Belleville 1"	NB738
18	Nut - 1"-8 Toplock	21163
19	Bolt - Carriage, 3/8-16	19829
20	Weldment - Hitch Tube Rear	21256*
21	Nut - Lock, 3/4-10	13997

FIGURE 26.1

Note: Some parts not shown for clarity.

When ordering replacement parts
* = USE PAINT CODE: TK=BLACK

BLADE DRIVER ASSEMBLY

Item #	Description	Part #
1	Nut - Nylon Lock, 1"-8	NB612
2	Washer - 1" X 2" X 14GA	NB738
3	Pulley - Blade, 12" OD	20920
4	Spacer - Pulley	21344
5	Bearing - Blade	4845
6	Shaft - Blade	18844
7	Nut - Nylon Lock, 1/2"-13	NB281
8	Washer - USS Flat, 1/2"	NB555
9	Blade Driver Housing	4858*
10	Bolt - Hex 1/2"-13 X 2"	NB509
11	Cover - Dust, RC Housing	21372
12	Washer - Flat, 1" X 1 1/2"	NB614HT
13	Nut - Nylon Lock, 3/4"-10	NB609
14	Weldment - Stump Jumper	4859*
15	Washer - Flat, 3/4" X 1 1/4"	NB179
16	Blade - Off-Set, Rough Cut	10358
17	Bolt - Hex, 3/4-10 X 2"	11431
18	Nut - Nylon Lock, 1"-14	18850
19	Kit - Replacement, Blade Driver	18905

Note: The pulley, stump jumper, blades, blade hardware and housing hardware are not included with the 18905 replacement blade driver kit.

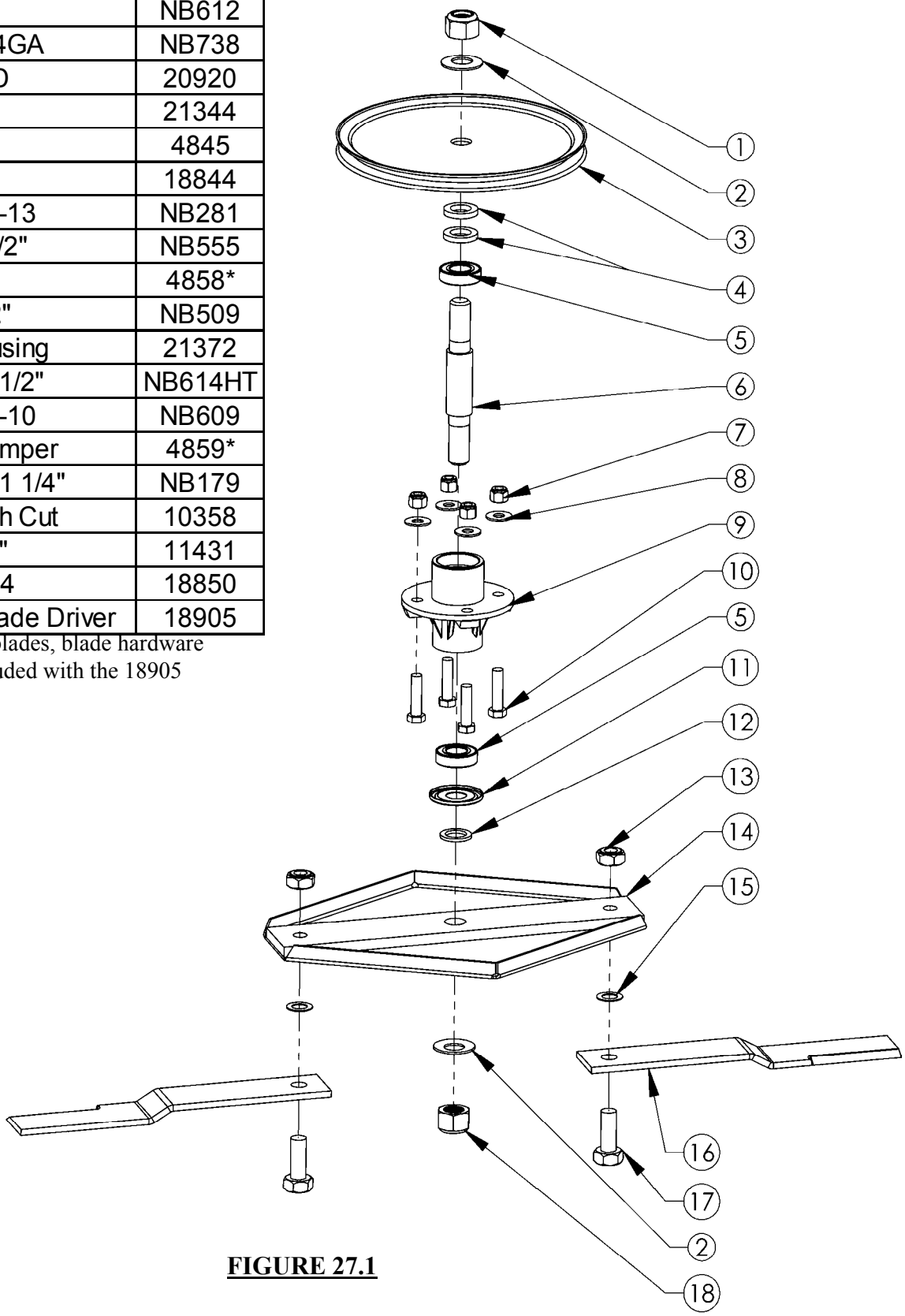

FIGURE 27.1

Note: Some parts not shown for clarity.

When ordering replacement parts
* = USE PAINT CODE: TK=BLACK

ENGINE PULLEY/BELT ASSEMBLY

Item #	Description	Part #
1	Spacer - 1.032 ID X .90 L	20572*
2	Nut - Nylon Lock, 5/16-18	NB181
3	Weldment - Motor Mount	21248*
4	Washer - Split Lock, 3/8"	NB711
5	Nut - Locking, 2 Way 5/16-18	NB558
6	Bolt - Hex 3/8-16 X 1 1/4	NB618
7	Clutch - Electric, 1" Crank	3813
8	Belt - B X 56"	20937
9	Bolt - Hex, 5/16-18 X 3"	NB563
10	Washer - Belleville 7/16 X 1 1/4	699
11	Bolt - Hex, 7/16-20 X 2.5"	NB685
12	Engine -14.5Hp Kawasaki	20918
13	Gasket - Kawasaki Muffler	N/A
14	Washer - M8, Split-Lock	N/A
15	Nut - M8 X 1.25	N/A
16	Muffler - Kawasaki, 14.5Hp FS481V	20919
17	Adapter - Oil Drain, Kawasaki	18810
18	Valve - Oil Drain	16000

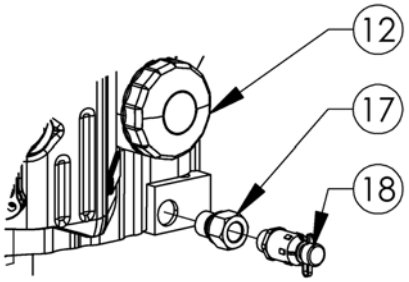

FIGURE 28.2

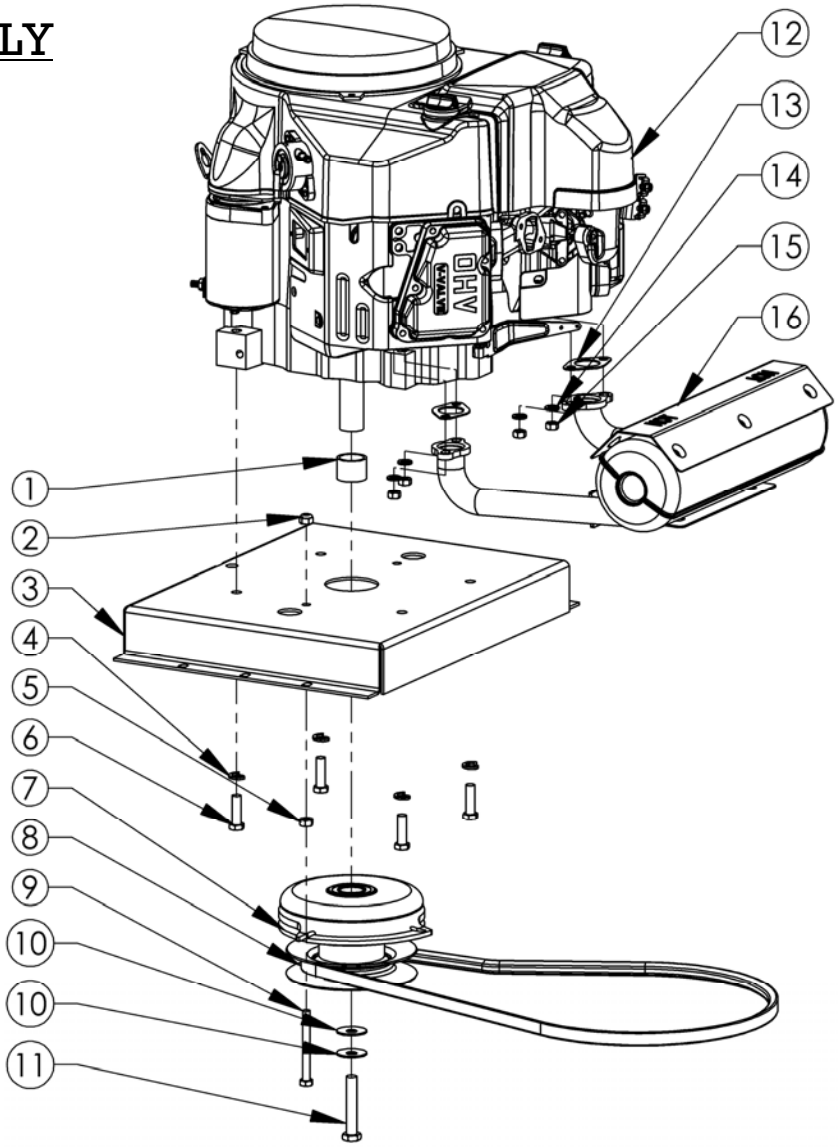

FIGURE 28.1

IDLER CONFIGURATION

Item #	Description	Part #
1	Nut - Nylon Lock, 3/8-16	NB182
2	Washer - SAE Flat 3/8	NB272
3	Pulley - Idler, OD3.25" ID3/8"	B527
4	Idler - Weldment	21285*
5	Nut - Hex, 3/8-16	NB212
6	Spring - Clutch Rod	682S
7	Bolt - Hex, 1/2-13 X 2 1/2	NB510
8	Nut - Jam Lock, 1/2-13 2-Way	NB121
9	Bolt - Hex, 3/8-16 X 2 1/2	NB619
10	Eyebolt - Turned 3/8-16 X 5	11223

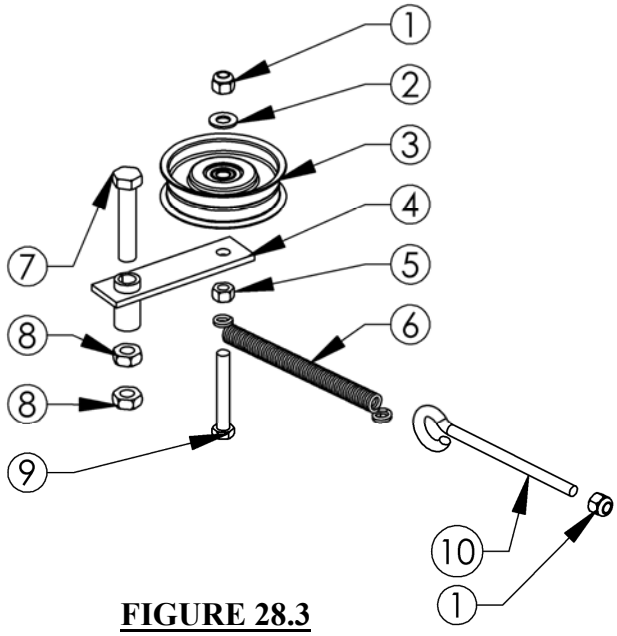

FIGURE 28.3

When ordering replacement parts
* = USE PAINT CODE: TK=BLACK

Note: Some parts not shown for clarity.

CONSOLE ASSEMBLY

Item No.	Description	Part #
1†	Keys - For Key Switch (2)	KSK
2†	Nut - Key Switch	9087
3†	Washer - Lock, Key Switch	9088
4	Switch - PTO	3605
5	Plate - Switch Backer	10810*
6	Console - Weldment	6108*
7†	Switch - Key	3623
8	Nut - Kep 8-32	NB201
9	Washer - SAE Flat 1/4	NB274
10	Screw - Phil Truss 8-32 X 1/2	NB197
11	Knob - T, Throttle Cable	4226K
12	Console - Engage; FM60	686C mod
13	Screw - #8 X 1/2, Serr Flng	21298
1-13	Console Assembly	21327
14	Cable - Throttle, 154"	20915
15	Wiring Harness	20901
1-15	Console & Wiring Harness Assem.	20897

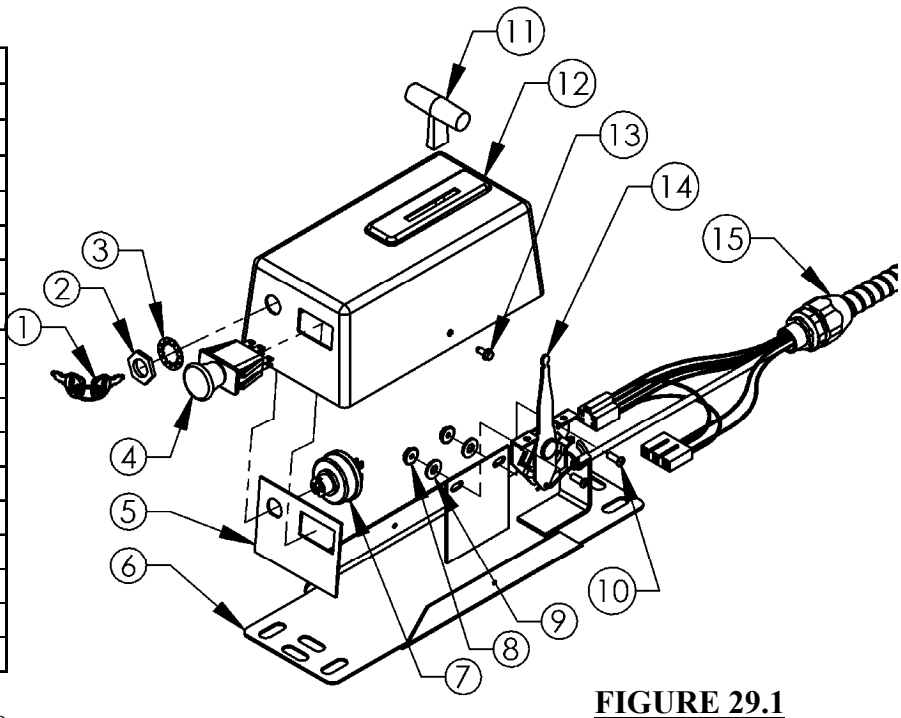

FIGURE 29.1

† Items 1, 2, 3 & 7 can be purchased as Key Switch Kit 21329.

When mounting the console assembly it may be necessary to mount it directly to the hitch tube depending on the vehicle you are towing it with. Some vehicle configurations will allow the console to be mounted to the vehicle (i.e. ATV rack). Make sure the wiring harness is secure and will not drag the ground. Periodically check to make sure all hardware is tight and the wiring harness is secure. NEVER operate this machine without the wiring harness being secure.

WIRING DIAGRAM

FIGURE 29.2

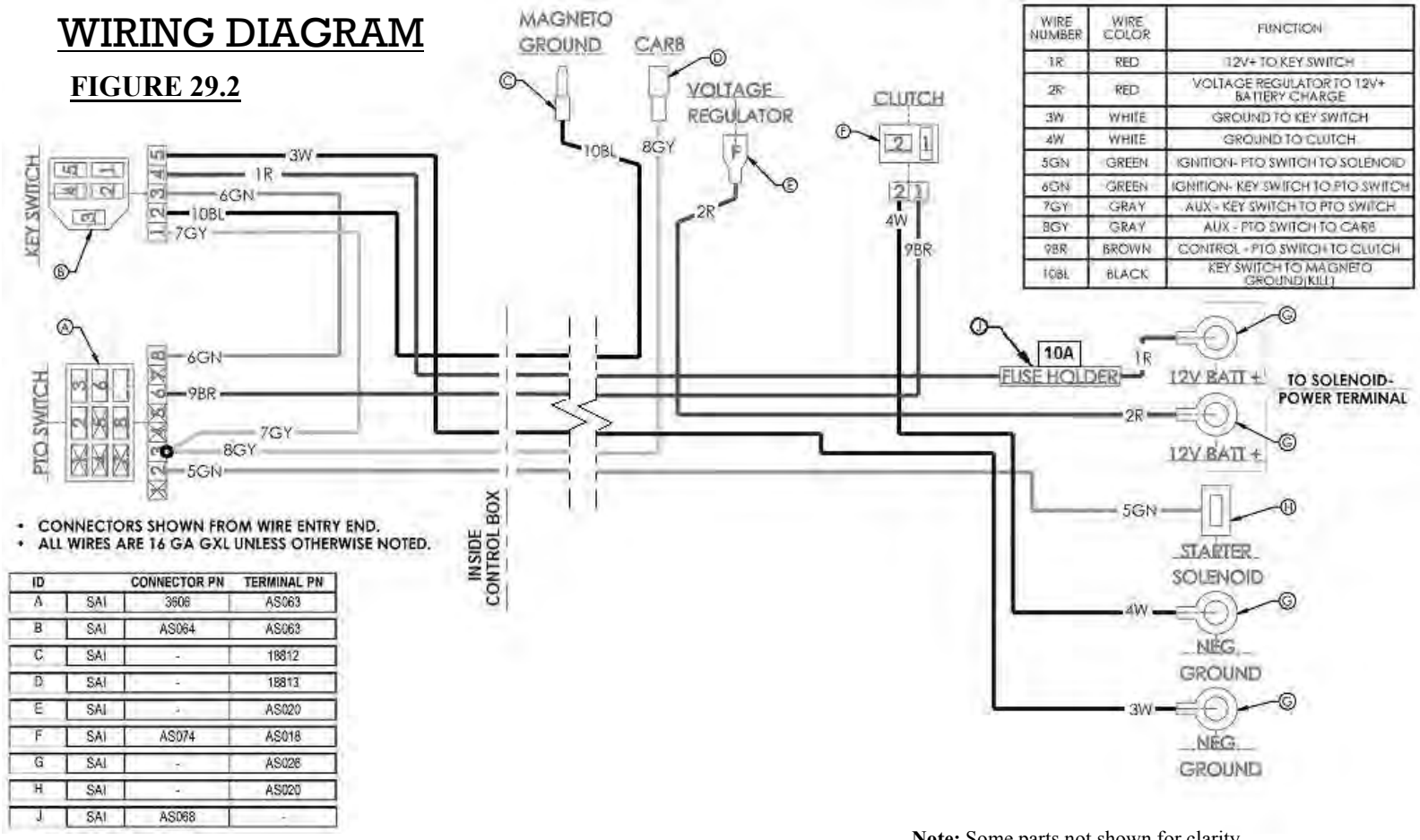

WIRE NUMBER	WIRE COLOR	FUNCTION
1R	RED	12V+ TO KEY SWITCH
2R	RED	VOLTAGE REGULATOR TO 12V+ BATTERY CHARGE
3W	WHITE	GROUND TO KEY SWITCH
4W	WHITE	GROUND TO CLUTCH
5GN	GREEN	IGNITION- PTO SWITCH TO SOLENOID
6GN	GREEN	IGNITION- KEY SWITCH TO PTO SWITCH
7GY	GRAY	AUX - KEY SWITCH TO PTO SWITCH
8GY	GRAY	AUX - PTO SWITCH TO CARB
9BR	BROWN	CONTROL - PTO SWITCH TO CLUTCH
10BL	BLACK	KEY SWITCH TO MAGNETO GROUND(KILL)

ID		CONNECTOR PN	TERMINAL PN
A	SAI	3606	AS063
B	SAI	AS064	AS063
C	SAI	-	18812
D	SAI	-	18813
E	SAI	-	AS020
F	SAI	AS074	AS018
G	SAI	-	AS026
H	SAI	-	AS020
J	SAI	AS068	-

Note: Some parts not shown for clarity.

When ordering replacement parts
* = USE PAINT CODE: TK=BLACK

CALIFORNIA EMISSIONS REQUIREMENTS

California compliant Cutters are equipped with a carbon canister.

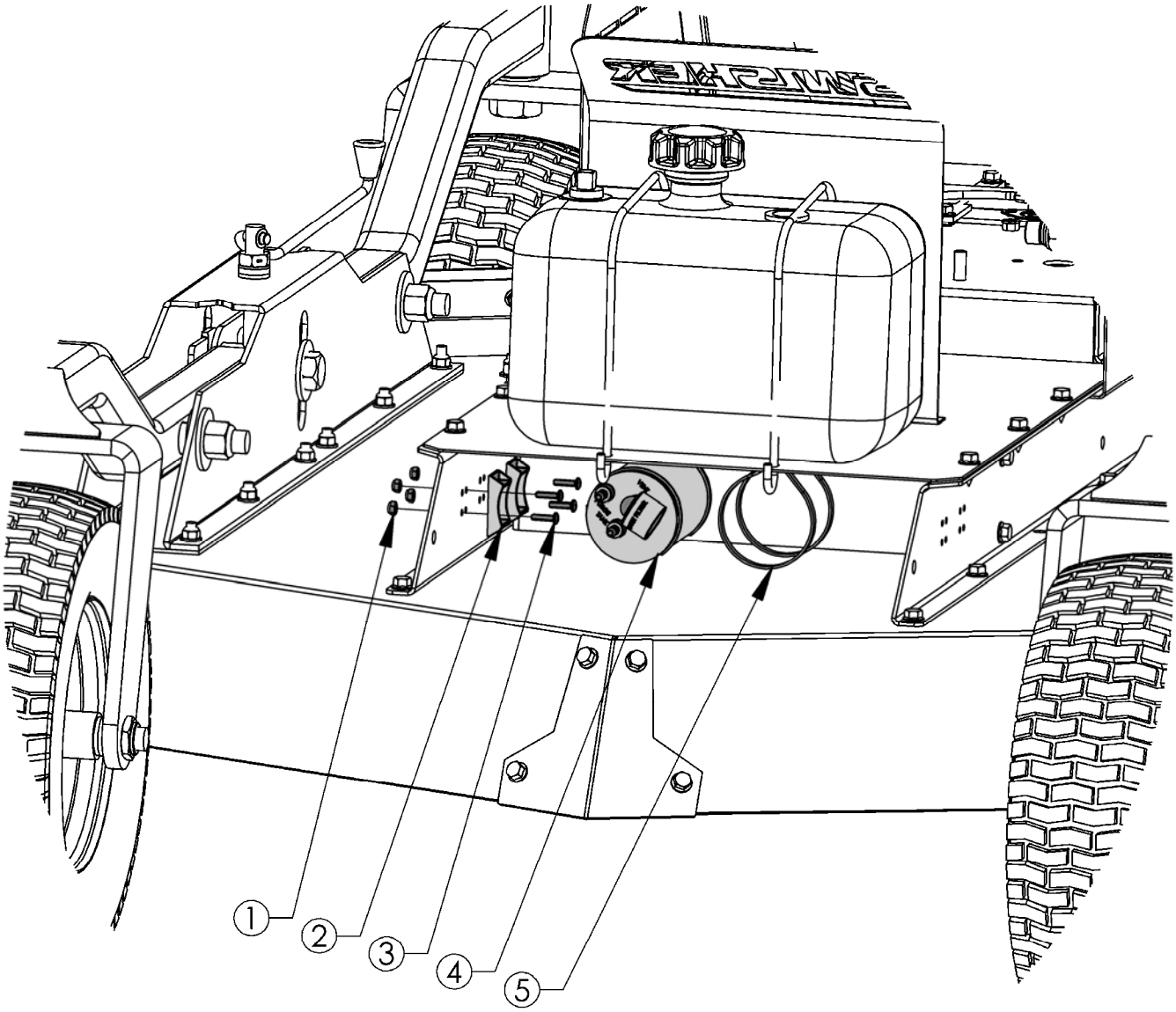

FIGURE 30.1

Item #	Description	Part #
1	Nut - 10-24 Nylon Lock	024900
2	Bracket - Carbon Canister	17127
3	Bolt - 10-24 X 3/4	024203
4	Carbon Canister - 2.50 Gallon	18224
5	Cable Tie - Carbon Canister	18219

SUGGESTED GUIDE FOR SIGHTING SLOPES FOR SAFE OPERATION

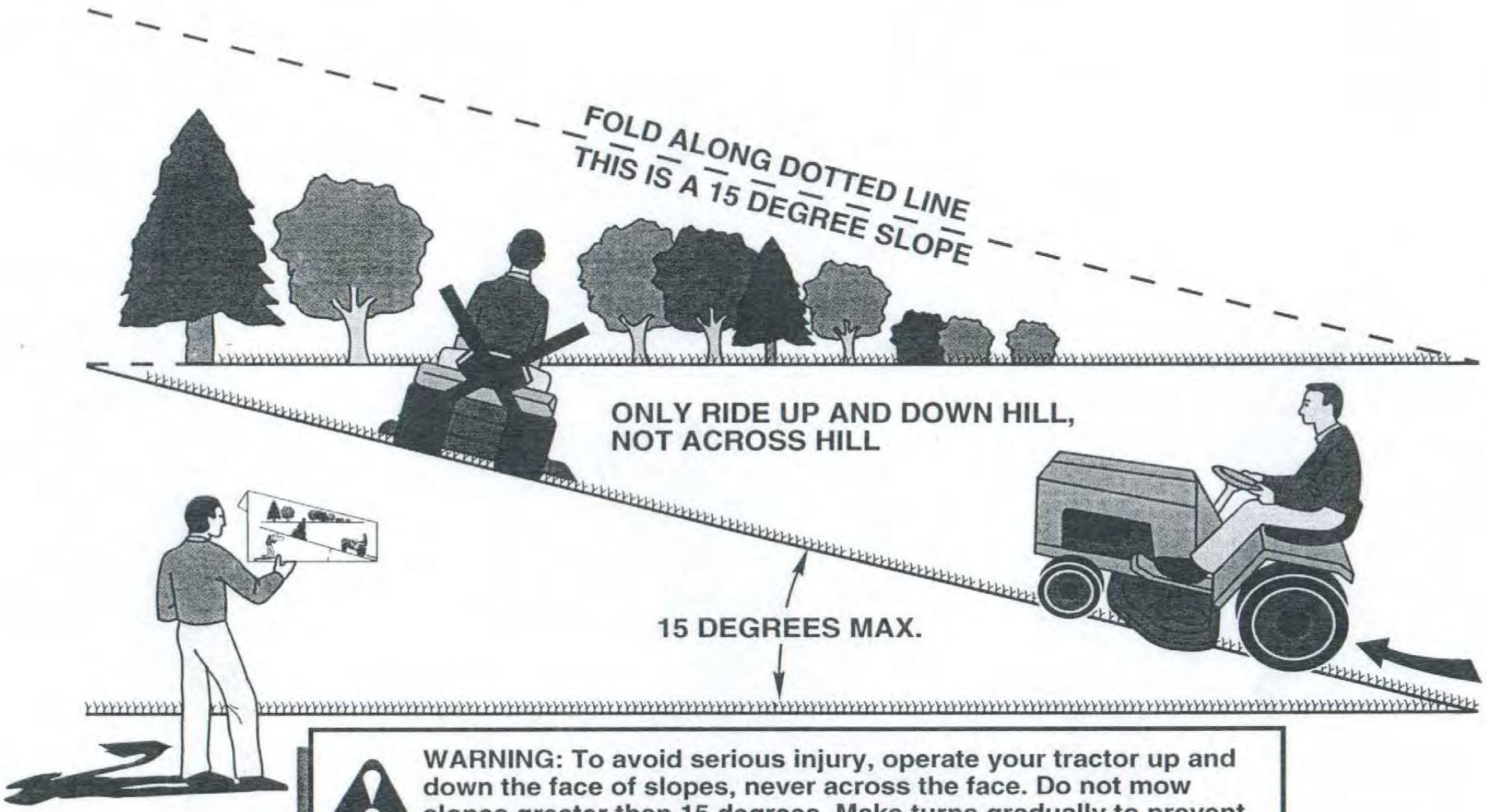

WARNING: To avoid serious injury, operate your tractor up and down the face of slopes, never across the face. Do not mow slopes greater than 15 degrees. Make turns gradually to prevent tipping or loss of control. Exercise extreme caution when changing direction on slopes.

1. Fold this page along dotted line indicated above.
2. Hold page before you so that its left edge is vertically parallel to a tree trunk or other upright structure.
3. Sight across the fold in the direction of hill slope you want to measure.
4. Compare the angle of the fold with the slope of the hill.

www.swisherinc.com

OWNER'S MANUAL

MODEL NO.

RC14544CP4K
RC14544CP4K-CA

IMPORTANT

Read and follow all Safety Precautions and Instructions before operating this equipment.

44" BRUSH KING TRAIL CUTTER

Each Cutter has its own model number. Each engine has its own model number. The model number for the Cutter will be found on the right hand side of the motor mount. The model number for the engine will be found on the top of the valve cover.
All Cutter parts listed herein may be ordered directly from Swisher or your nearest Swisher dealer.
All engine parts may be ordered from the nearest dealer of the engine supplied with your Cutter.

WHEN ORDERING PARTS, PLEASE HAVE THE FOLLOWING INFORMATION AVAILABLE:

* PRODUCT – RC44'' BRUSH KING TRAIL CUTTER
* SERIAL NUMBER - _____
* MODEL NUMBER - _____
* ENGINE MODEL NUMBER - _____
  TYPE - _____
* PART NUMBER
* PART DESCRIPTION

TELEPHONE - 1-800-222-8183
FAX - 1-660-747-8650

SWISHER ACQUISITION INC.
1602 CORPORATE DRIVE
WARRENSBURG, MO 64093
www.swisherinc.com

SWISHER®

CHANGING YOUR LANDSCAPE SINCE 1945