ROLLON®
BY TIMKEN

Linear Line



General catalogue

English

Interactive catalogs
on: www.rollon.com

TO SUPPORT YOU, WE DESIGN AND PRODUCE

An industrialized process with various levels of customization

For over 40 years, Rollon has adopted an approach entailing responsibility and ethics in the design and production of our linear motion solutions for different industrial sectors. The reliability of an international technology group has now been combined with the availability of a local support and service network

VALUES



PERFORMANCE

Rollon's goal is to help our clients become more competitive in their markets through technological solutions, design simplification, productivity, reliability, duration, and low maintenance.



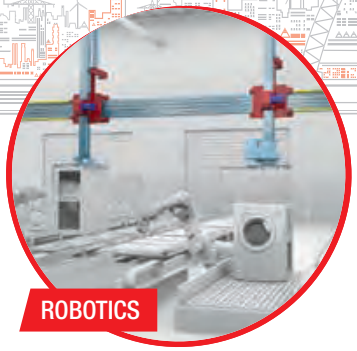

ROBOTICS

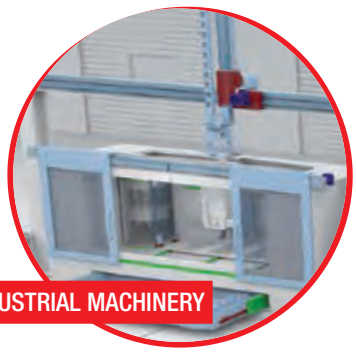

INDUSTRIAL MACHINERY



LOGISTICS



RAILWAY

COLLABORATION

High-level technical consulting and cross-competence allow us to identify the needs of our clients and transform them into guidelines for continuous exchange, while**our strong specialization in the different industrial sectors becomes an factor in developing projects and innovative applications.**



Rollon takes on the task of design and development of linear motion solutions, taking care of everything for our customers, so that they can concentrate on their core business. **We offer everything from individual components to specifically designed, mechanically integrated systems: the quality of our applications is an expression of our technology and competence.**

SOLUTIONS APPLICATIONS

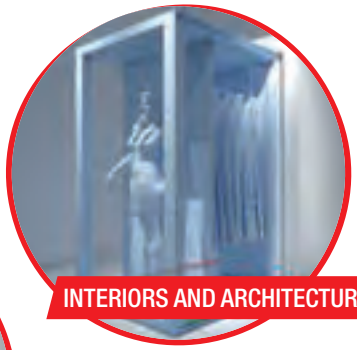

INTERIORS AND ARCHITECTURE



MEDICAL



SPECIAL VEHICLES



AERONAUTICS

DIVERSIFIED LINEAR SOLUTIONS FOR EVERY APPLICATION REQUIREMENT

Linear and telescopic rails



Linear Line

Linear and curved rails with ball and roller bearings, with hardened raceways, high load capacity, self-alignment, and capable of working in dirty environments.



Telescopic Line

Telescopic rails with ball and roller bearings, with hardened raceways, high load capacities, low bending, resistant to shocks and vibrations. For partial, total or extended extraction up to 200% of the length of the guide.

Linear actuators and automation systems



Actuator Line

Linear actuators with different rail configurations and transmissions, available with belt, screw, or rack and pinion drives for different needs in terms of precision and speed. Rails with bearings or ball recycle systems for different load capacities and critical environments.



Actuator System Line

Integrated actuators for industrial automation, used in applications in several industrial sectors: automated industrial machinery, precision assembly lines, packaging lines and high speed production lines. The Actuator Line evolves to satisfy the requests of our most discerning clients.

Content

Compact Rail



1 Product explanation

The newly designed Rollon guide with double row ball bearings for higher load capacities. CR-2

2 Technical data

Performance characteristics and notes CR-5
Configurations and behavior of the slider under yawing moment M_z CR-6
Load capacities CR-8

3 Product dimensions

TG / TMG -rail, Rail length CR-11
R-version slider CR-12
RD-version slider CR-14
TG / TMG -rail with sliders CR-16
Offset of fixing holes CR-17

4 Accessories

Rollers CR-18
Wipers, Alignment fixtures, Fixing screws CR-19

5 Technical Instructions

Linear accuracy CR-20
Points of contact between rollers and raceways CR-22
Slider composition CR-23
V+P/U-system tolerance compensation CR-24
A+P/U-system tolerance compensation CR-26
Preload CR-29
Drive force CR-30
Lubrication, Slider lubrication CR-32
Corrosion protection, Speed and acceleration, Operating temperatures CR-33

6 Installation instructions

Fixing holes CR-34
Adjusting the sliders CR-35
Use of radial ball bearing rollers CR-36
Installing the single rail CR-37
Parallel installation of two rails CR-40
Installation of the self-aligning systems CR-42
Joined Rails CR-43
Installation of joined rails CR-44

Ordering key

Ordering key with explanations CR-45

1 Product explanation

Self-aligning linear guides with bearings and C-profile featuring newly designed robust steel slider CR-46

2 Technical data

Performance characteristics and notes CR-49
Configurations and behavior of the slider under yawing moment M_z CR-50
Load capacities CR-52

3 Product dimensions

Rail T, U, K CR-54
Rail length CR-55
NSW/NSA-version slider CR-56
NSD/NSDA-version slider CR-58
T-rail with NSW/NSD slider CR-60
U-rail with NSW/NSD slider CR-61
K-rail with NSA/NSDA slider CR-62
Offset of fixing holes CR-63

4 Accessories
Rollers CR-64
Wipers, Alignment fixture AT (for T- and U-rail), Alignment fixture AK (for K-rail) CR-65
Fixing screws CR-66
Manual clamp elements CR-67

5 Technical instructions
Linear accuracy CR-68
Supported sides CR-69
T+U-system tolerance compensation CR-70
K+U-system tolerance compensation CR-72
Preload CR-75
Drive force CR-77
Lubrication, Slider lubrication CR-79
Corrosion protection, Speed and acceleration, Operating temperatures CR-80

6 Installation instructions
Fixing holes CR-81
Adjusting the sliders, Use of radial ball bearing rollers CR-82
Installing the single rail CR-83
Parallel installation of two rails CR-85
Installation of the T+U- or the K+U-system CR-87
Joined Rails CR-88
Installation of joined rails CR-90

Ordering key
Ordering key with explanations CR-91

Calculation formulas
Static load CR-93
Slider load CR-94
Service life CR-97

X Rail



1 Product explanation

X-Rail: linear bearings in stainless steel, zinc-plated steel or hardened steel with Rollon-Nox process. XR-2

2 Technical data

Performance characteristics and Remarks XR-4
Load capacities XR-5

3 Product dimensions

TEX - guide with shaped raceways in stainless steel XR-6
UEX - guide with flat raceways in stainless steel XR-9
TEX-UEX: Mounted sliders and rails XR-11
TES - guide with shaped raceways in zinc-plated steel XR-12
UES - guide with flat raceways in zinc-plated steel XR-15
TES-UES: Mounted sliders and rails XR-17
TEN/TEP and UEN - guide with shaped or flat raceways hardened with Rollon-Nox patented process. XR-18
TEN-TEP-UEN: Mounted sliders and rails XR-23

4 Accessories

Rollers XR-24
Fixing screws XR-27

5 Technical instructions

Lubrication, T+U-System XR-28
TEN40+UEN40 self-aligning system XR-30
Service life calculation XR-31
Setting preload, Use of radial ball bearing rollers XR-33
Use of radial ball bearing rollers XR-34

Ordering key

Ordering key with explanations XR-35
Accessories XR-36

Easyslide



1 Product explanation

Easyslide is a linear ball rail system (with caged ball bearings for the SN series or with recirculating ball bearings for the SNK series) with single slider or multiple sliders. ES-2

2 Technical data

Performance characteristics and notes ES-4

3 Dimensions and load capacity

SN ES-5
SN ES-9
SNK ES-10
SNK ES-11

4 Technical instructions

Static load ES-12
Service life ES-14
Clearance and preload, Coefficient of friction, Linear accuracy, Speed, Temperature ES-15
Anticorrosive protection, Lubrication SN, Lubrication SNK ES-16
Fixing screws, Installation instructions ES-17
SNK Joined Rails ES-18
Instructions for use ES-19

5 Standard configurations

SN Standard configurations ES-20

Ordering key

Ordering key with explanations ES-22

Curviline



1 Product explanation

Curviline are curvilinear rails with constant and variable radii CL-3

2 Technical data

Performance characteristics and notes CL-5

3 Product dimensions

Rails with constant/variable radii with tempered raceways CL-6
Slider, Mounted sliders and rails, Load capacities CL-7
Rails with constant/variable radii in carbon steel CL-8
Slider, Mounted sliders and rails, Load capacities CL-9
Rails with constant/variable radii in stainless steel CL-10
Slider in stainless steel, Rail-slider package in stainless steel, Load capacities CL-11

4 Technical instructions

Anticorrosive protection,Lubrication CL-12
Setting the preload CL-13

Ordering key

Ordering key with explanations CL-14

O-Rail



1 Product explanation
O-Rail - unique assembly possibilities, FXRG series OR-2

2 General characteristics
Configurations OR-4

3 Dimensions and load capacity
FXRG series OR-5

4 Accessories
Rollers for FXRG OR-7

5 Technical instructions
Mounting configurations OR-8
Lubrication, Joined Rails OR-10
Installation of joined rails OR-12

Ordering key

Prismatic Rail



1 Product explanation
Prismatic Rail: with cylindrical or V-shaped rollers PR-2

2 Technical data
Performance characteristics and Notes PR-4

3 Product dimensions
Steel V-shaped rails, Machining: drilled guide rails with straight cut PR-5
Machining: drilled guide rails with 1 bevel and 1 slanting cut,
Machining: drilled guide rails with 2 slanting cuts PR-6
Roller slides, Tilting roller slides with 4 rollers Ø30 for V-shaped guide rails 28.6x11 PR-7
Tilting roller slides with 4 rollers Ø40 for V-shaped guide rails 35x16 PR-8
Fixed 4-roller slide Ø40 for V-shaped guide rails V 35x16 PR-9
Type G roller slides (roller Ø52) and H type (roller Ø62) for V-shaped guide rails 55x25 PR-10
I-type roller slides (roller Ø52) and L-type (roller Ø62) for V-shaped guide rails V 55x25 PR-11

4 Accessories
V-shaped rollers (Guide Rails 28.6 x 11) anti-oxidized version,
V-shaped rollers [rails 35 x 16] PR-12
Spare roller with pin PR-13
Assembly Pins, Type 0 assembly pins suitable for roller slide Ø30 and Ø40 PR-14
Type 7 assembly pins suitable for roller slide E-F,
Assembly pins type 8 suitable for carriage E-F PR-15
Type 9 assembly pins suitable for tilting roller slides G-H / I-L,
Type 10-11-12 assembly pins suitable for tilting roller slides P-Q PR-16
V-shaped guide rail assembly inserts PR-17

5 Technical instructions
Rollers and V-shaped guide rails 28.6x11 and 35x16, Application diagram
common to 2-roller slides, Application diagram common to 3-roller slides PR-18

Ordering key
Identification codes for roller slides and pins PR-19
Assembly of standard carriages / K version carriages PR-20

Speedy Rail



1 Product explanation

Self-supporting and self-aligning extruded aluminum linear guides SR-2

2 Technical data

Dimensions, Rollers and roller assemblies SR-3

3 Speedy Rail 35

"Speedy Rail 35" guide and specification SR-4
"Speedy Rail 35" assemblies and components SR-5
Sliding doors "Speedy Rail 35" application example SR-7

4 Speedy Rail C 48

"Speedy Rail C 48" guide and specification SR-8
"Speedy Rail C 48" assemblies and components SR-9
Rollers and roller boxes for "Speedy Rail C 48" guide SR-10
Roller boxes for "Speedy Rail C 48" guide SR-11

5 Speedy Rail 60

"Speedy Rail Mini" guide and specification SR-12
"Speedy Rail Mini" roller assemblies and components SR-13
"Speedy Rail Mini" guide and components SR-14
Dovetail clamps and fishplates SR-15
Roller assembly and "V" rollers "Light" SR-16
Roller assemblies and "V" rollers SR-17

6 Speedy Rail 90

"Middle Speedy Rail" guide and specifications SR-19
"Middle Speedy Rail" assemblies and components SR-20
"Middle Speedy Rail" guide and components SR-21
Dovetail clamps and fishplates SR-22
Plastic compound shell "V" rollers SR-23
Roller assembly with "V" shaped rollers SR-24

7 Speedy Rail 120

"Standard Speedy Rail" guide and specifications SR-25
"Standard Speedy Rail" assemblies and components SR-26
"Standard Speedy Rail" guide and specifications SR-27
Components for speedy rail SR120 guide SR-28
Standard dovetail clamps SR-29
Racks components for rigid mounting SR-30
Standard fixing fishplates SR-31
Plastic compound shell "V" rollers SR-32
Roller assembly with "V" rollers SR-34
Plastic compound shell rollers SR-35
2 Rollers light full-block assembly SR-36
Compact roller assembly with plastic compound rollers SR-37
Full-block roller assembly SR-38
Roller assembly with 4 rollers SR-39
Narrow/wide base blindo beam roller assembly SR-40
8 Rollers blindo beam roller assembly SR-41
Light 4 rollers floating assembly for Speedy Rail guides SR-42
Floating roller assembly with 4 rollers - short/long pivot SR-43
Rollers assembly, one fixed, one self adjusting SR-44
Floating roller assembly with 6 rollers - short/long pivot SR-45
Floating roller assembly with 8 rollers - short/long pivot SR-47

Assembling diagram for rigid mounted rack SR-48
Standard racks SR-49
Standard scrapers SR-50

8 Speedy Rail 180

Wide body multi groove speedy rail guide and specifications SR-51
Roller assemblies and components SR-52
Wide body multi groove speedy rail guide and specifications SR-53
Components for wide body multi groove Speedy Rail guide SR-54
Roller assembly with "V" shaped rollers SR-55
Roller assembly with 4 rollers SR-56
8 Rollers floating assembly - complete pairing SR-57
Backing plate for floating roller assemblies SR-58

9 Speedy Rail 250

Super wide body multi groove speedy rail guide and specifications SR-59
Roller assemblies and components SR-60
Superwide body multi groove speedy rail guide and specifications SR-61
Components for super wide body speedy rail guide SR-62
Roller assembly with "V" shaped rollers SR-63

10 Technical detail

Mechanical and technological components specifications SR-64
Treatments on all light alloy components, Rollers, Roller assemblies SR-65
Rollers adjustments, Torque settings, Scrapers, Drive head SR-66
Lubrication, Life testing SR-67
Summary table Speedy Rail guides SR-68
Loads on a 4 'V' rollers trolley SR-69
Loads on twin 4 'V' rollers trolleys SR-73
Loads on a 4 'V' rollers vertical trolley SR-74
Cilindrical roller loads SR-75
Load capacities for C Rollers assemblies SR-77
Load capacities for V Rollers assemblies SR-81
User suggestions SR-82

11 Applications SR-85

12 Ordering key SR-90

Technical features overview

Reference		Section	Shape of rail	Hardened raceways	Rollon NOX hardening process *3	Self-alignment	Slider		Anticorrosion
Product Family	Product						Balls	Rollers	
Compact Rail	TLC KLC ULC			√		+++			****
	TG/TMG PLUS	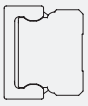		√	√	+++			****
X-Rail	TEX TES UEX UES					+++			Available in stainless steel
	TEN/TEP UEN	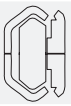			√	+++			
Easyslide	SN	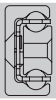		√		++			****
	SNK			√		+			****
Curviline	CKR CVR CKRH CVRH CKRX CVRX	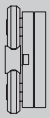		√		+			**** Available in stainless steel
O-Rail	FXRG				√	+++			****
Prismatic Rail	P			√		+++			
Speedy Rail	SR35			√		++			
	SRC48			√		+			
	SR			√		+++			

Reported data must be verified according to the application.

*1 The maximum value is defined by the application.

*2 A longer stroke is available for jointed versions.

*3 High dept nitride hardening treatment and oxidation.

*4 Value reffered to a single bearing, it's possibile to configure the numbers of bearings to obtain the desired load capacity.

***C50

****For more information, please contact our technical department.

Size	Max. load capacity per slider [N]		Dynamic coefficient [N] C 100	Max. moment capacity [Nm]			Max. rail length	Max. speed*	Max. acceleration	Operating temperature
	C_0 rad	C_0 ax		M_x	M_y	M_z	[mm]	[m/s]	[m/s²]	
18-28-35 -43-63	15000	10000	36600	350	689	1830	4080*2	9	20	-20°C/+120°C
18-28-43	10800	7140	15200	110.7	224.3	754	4000*2	7	15	-20°C/+120°C
20-26-30-40-45	1740	935	****				4000	1.5	2	-20°C/+100°C TEX-UEX -20°C/+120°C TES-UES
TEN: 26-40 TEP: 30 UEN: 40	3240	1150	3670				4000	1,5	2	-30°C/+170°C
22-28-35 -43-63	122000	85400	122000	1120,7	8682	12403	1970	0,8		-20°C/+130°C
43	10858	7600	10858	105	182	261	2000*2	1,5		-20°C/+70°C
16,5-23	2475	1459	****				3240	1,5	2	-20°C/+80°C
12	4000*4	1190*4	7600*4				4000	9	20	-20°C /+120°C
28-35-55	15000	15000	-	-	-	-	4100*2	7	20	-10°C/+80°C
35	400	400	-	-	-	-	6500*2	8	8	- 30° C / + 80° C
48	540	400	-	-	-	-	7500*2	8	8	- 30° C / + 80° C
60-90-120-180-250	14482	14482		-	-	-	7500*2	15	10	- 30° C / + 80° C



ROLLON®

BY TIMKEN

Compact Rail



New Compact Rail

It simplifies the project, improves the perfomance and reduces the application cost: **8 main advantages.**

1

Self-aligning system

- Select the most suitable structure for your project
- Avoid machining the mounting surface
- Reduce the assembly time

Up to 3.9 mm with T+U or K+U rails
Up to 3.5 mm with TG rails



Compact Rail

Configurations of



Rails with different geometries

+



Single row ball bearings



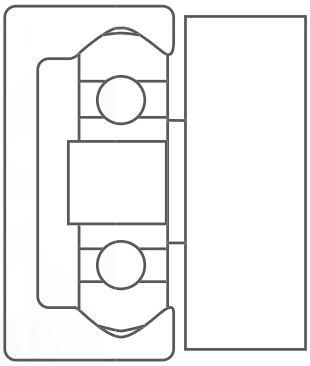

Up to ±2° with K+U rails



Up to ±2° with K+U rails



Up to 3.9 mm with T+U or K+U rails



Up to ±2° with K+U rails
Up to ±1.3° with TG rails

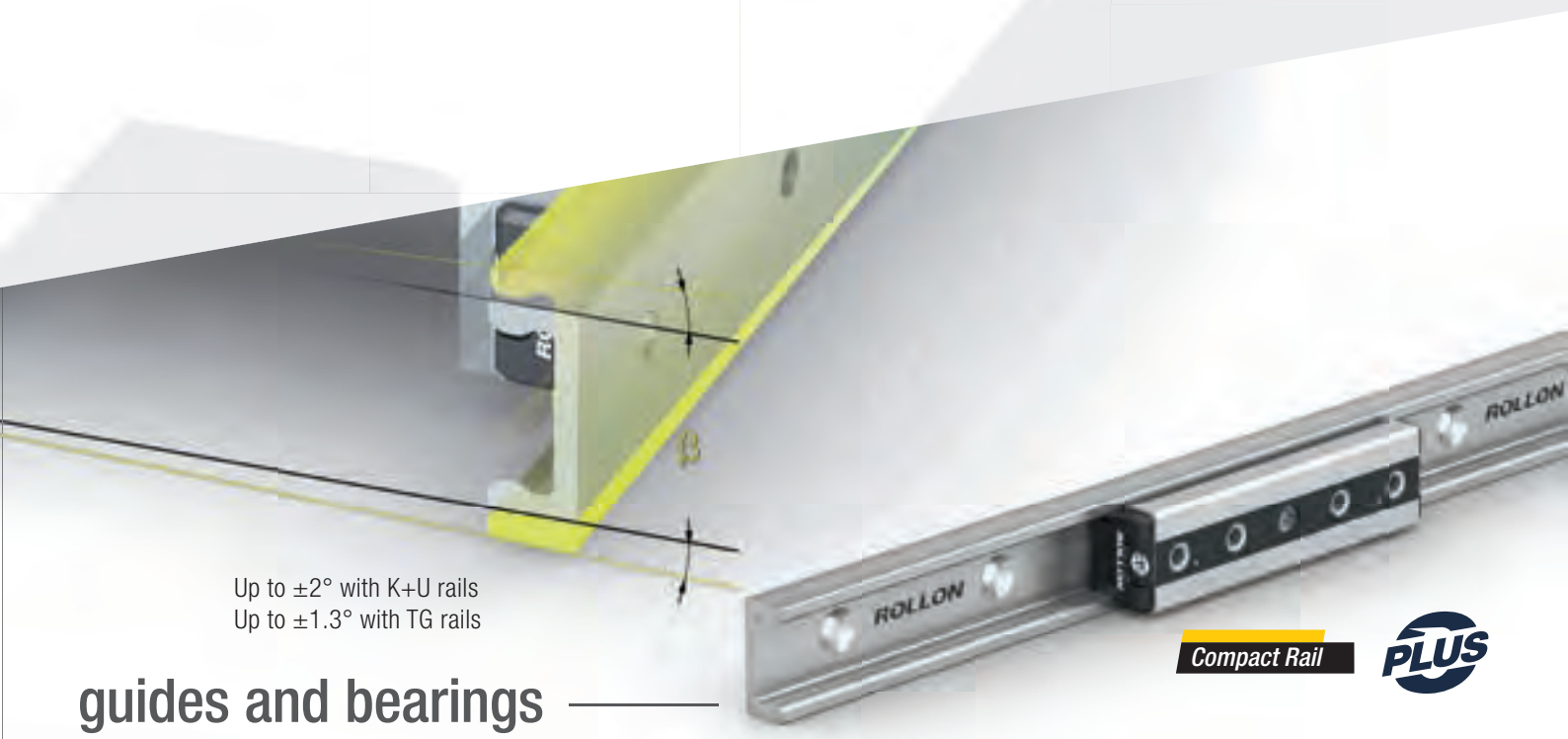

Up to ±2° with K+U rails
Up to ±1.3° with TG rails

Compact Rail PLUS

guides and bearings

Rail with convex raceways and higher rigidity



+

Double row ball bearings



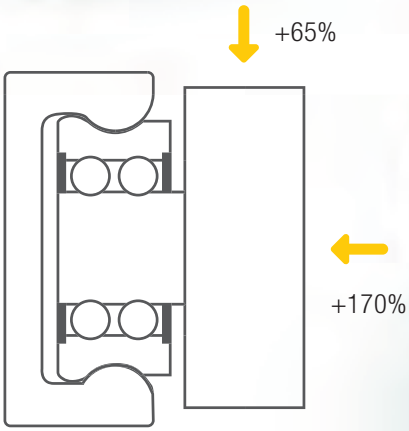



* Example referred to size 43.

Up to ±1.3° with RP+RA or RU+RA sliders



Up to ±1.3° with RP+RA or RU+RA sliders



Up to 3.5 mm with RP+RV or RU+RV sliders



2

Optimal reliability in dirty environments

Lateral sealing for a greater protection against contaminants

New self-centering wiper for an optimal cleansing of the raceways

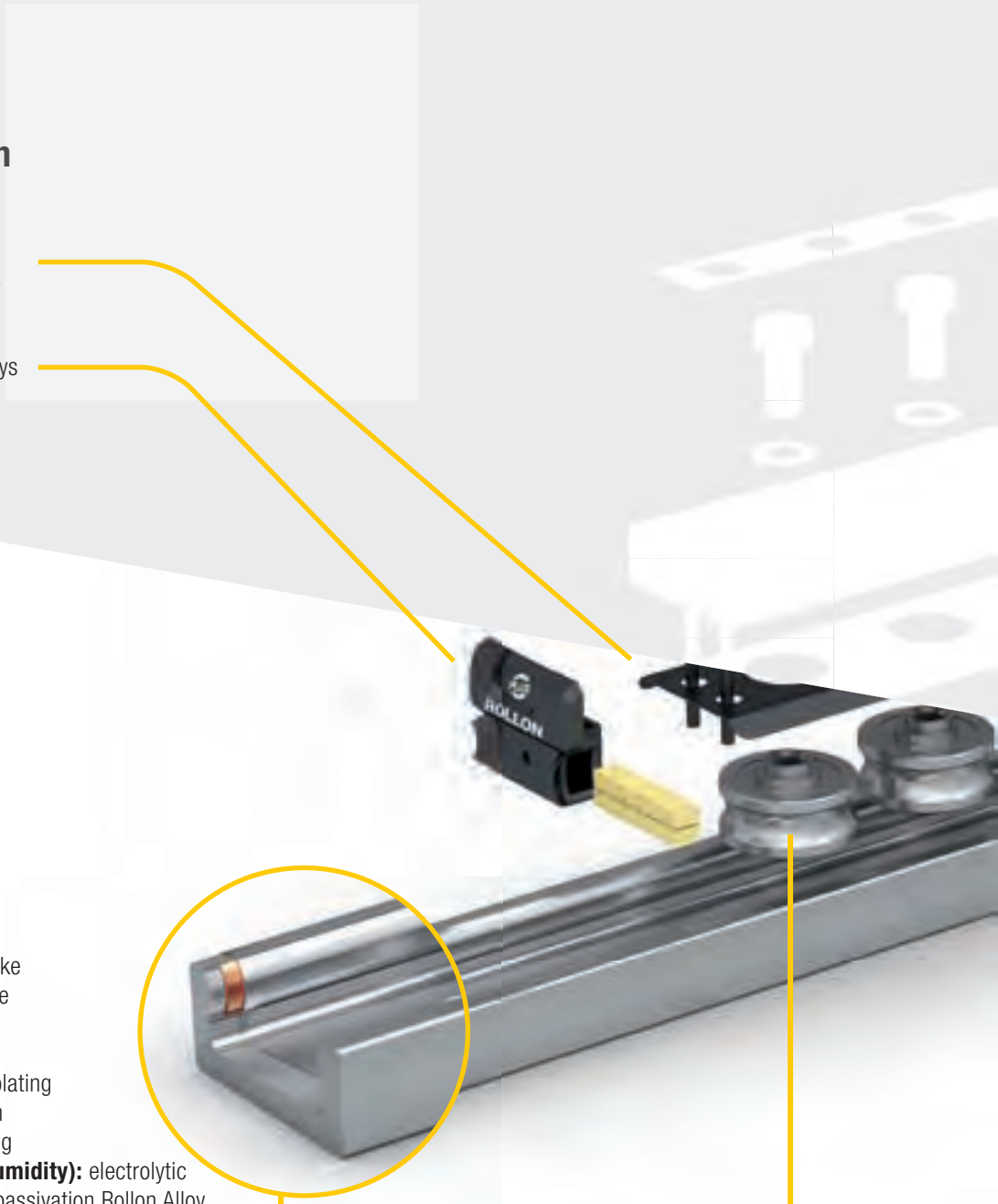

3

Resistant to corrosion

Different surface treatments make Compact Rail reliable even in the harsher environments

- **Indoor applications:** zinc-plating ISO 2081. Also available with electro-painted black finishing
- **Corrosive environments (umidity):** electrolytic plating with high resistance passivation Rollon Alloy
- **Corrosive environments (acidic or basic):** nichel-plating

4

Long lifetime

Induction hardened raceways with 1.2 mm effective depth and hardness between 58 and 62 HRC

5

High dynamics

Speed up to 9 m/s
Acceleration up to 20 m/s2

New Compact Rail slider

Improved performance and a new look designed to fit every project perfectly.



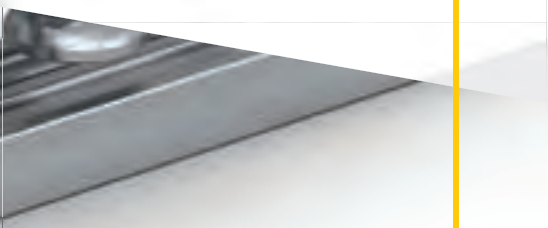

6

Low maintenance

Integrated lubrication system with slow release felt and front-access for greasing

7

Uniquely quiet

Ground raceways for a smooth and silent movement

8

Strength and sturdiness

Thanks to steel slider body

Product explanation

The newly designed Rollon guide with double row ball bearings for higher load capacities.



Fig. 1

Featuring double row ball bearings, new rigid rails with convex raceways and new robust steel sliders with longitudinal protection and floating wipers, Compact Rail Plus has been designed for the most demanding applications in terms of load capacities, dynamics and work environment. All while maintaining the self-aligning capabilities that make this product family unique.

The rails are made of cold drawn carbon steel, zinc-plated for sizes 28 and 43 and hardened with Rollon-Nox patented process for size 18 (nitriding and black oxidation). Other treatments for higher corrosion resistance are available as an option. For sizes 28 and 43, raceways are induction hardened and ground. The sliders are available in four versions: guiding slider; floating slider; extra-floating slider and rotating slider. Combining two rails with different sliders makes it possible to create self-aligning systems that can compensate misalignment errors on two planes: radial up to ±1.3° and axial up to 3.5 mm.

The most important characteristics:

- High radial and axial load capacity
- High rigidity
- Robust steel slider with longitudinal protection and floating wipers
- Self-aligning in two planes
- Induction hardened and ground raceways (size 28 and 43)
- Nitriding and black oxidation and polished raceways (size 18)
- Protected for dirty environments
- High operating speeds
- Wide temperature range
- Two ways to adjust the slider in the guide rail
- Different anticorrosion treatments available for rails and slider bodies

Preferred areas of application:

- Cutting machines
- Medical technology
- Packaging machines
- Photographic lighting equipment
- Construction and machine technology (doors, protective covers)
- Robots and manipulators
- Automation
- Handling

Rail with convex raceways

Rails are made of cold-drawn carbon steel and feature a c-shaped cross-section with interior convex raceways. The rail shape allows protection from accidental bumps and other damages that might occur during usage.

For sizes 28 and 43, the raceways are induction hardened and fine ground and the rail is zinc-plated. Other treatments are available for higher corrosion resistance, these include: Rollon Aloy, Rollon E-coating and nickel plating. For size 18, the rail is treated with Rollon-Nox nitriding and oxidation process that provides a fine black color to the entire rail. Other anticorrosion treatments are not available.

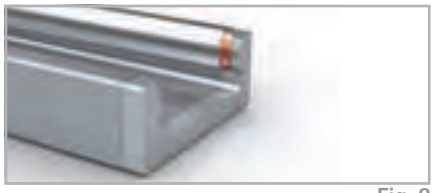

Fig. 2



Fig. 3

R-slider

Robust zinc plated steel slider with sealed double row ball bearing rollers, self-centering heads with wipers, longitudinal seals to protect the internal components and a top sealing strip to prevent accidental tampering of the fixed rollers. The slider body is accurately finished with matte longitudinal edge chamfer and a shining ground flat surface. It is available for all sizes, configurable with up to six rollers depending on the load requirement. Four versions are available to allow different floating capacities and create self-aligning systems: RV guiding slider, RP floating slider, RU extra-floating slider and RA rotating slider.



Fig. 4

RD-slider

Constructed as the R-slider with mounting holes parallel to the direction of preferred loading. It is available for sizes 28 and 43, with three or five rollers, depending on load case and load direction set with the corresponding configuration.



Fig. 5

Self-alignment system: V+P/U

The combination of two rails, one featuring a RV guiding slider and one featuring a RP floating slider or RU extra-floating slider, creates a system that allows to compensate large axial misalignment errors.



Fig. 6

Self-alignment system: A+P/U

The combination of two rails, one featuring a RA rotating slider and one featuring a RP floating slider or RU extra-floating slider, creates a system that allows to compensate misalignment errors on two planes: axial and radial.



Fig. 7

Rollers

The precision rollers have double row ball bearings to provide high load capacities in both radial and axial direction. All rollers are equipped with splash-proof plastic seal (2RS). They are available in three versions: guiding rollers with two contact points on the raceway; floating rollers with one contact point and two lateral shoulders to limit the axial floating; extra-floating rollers with completely flat outer ring for total excursion. All rollers can also be ordered individually, and for size 28 and 43 it is available the stainless steel version.



Fig. 8

Wipers

The slider heads are equipped with special slow release felt pads and are free to rotate with respect to the slider body, so that the felts are always in contact with the raceways to ensure a perfect lubrication. The felts can be grased through a dedicated oil refilling access on the front of the head, simply by means of a syringe oiler.



Fig. 9

Alignment fixture

The alignment fixture is used during installation of joined rails in order to precisely align the rails with each other.

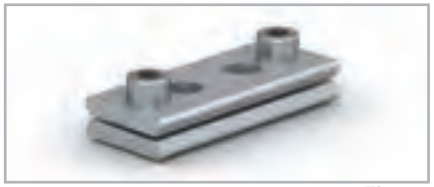

Fig. 10

Technical data

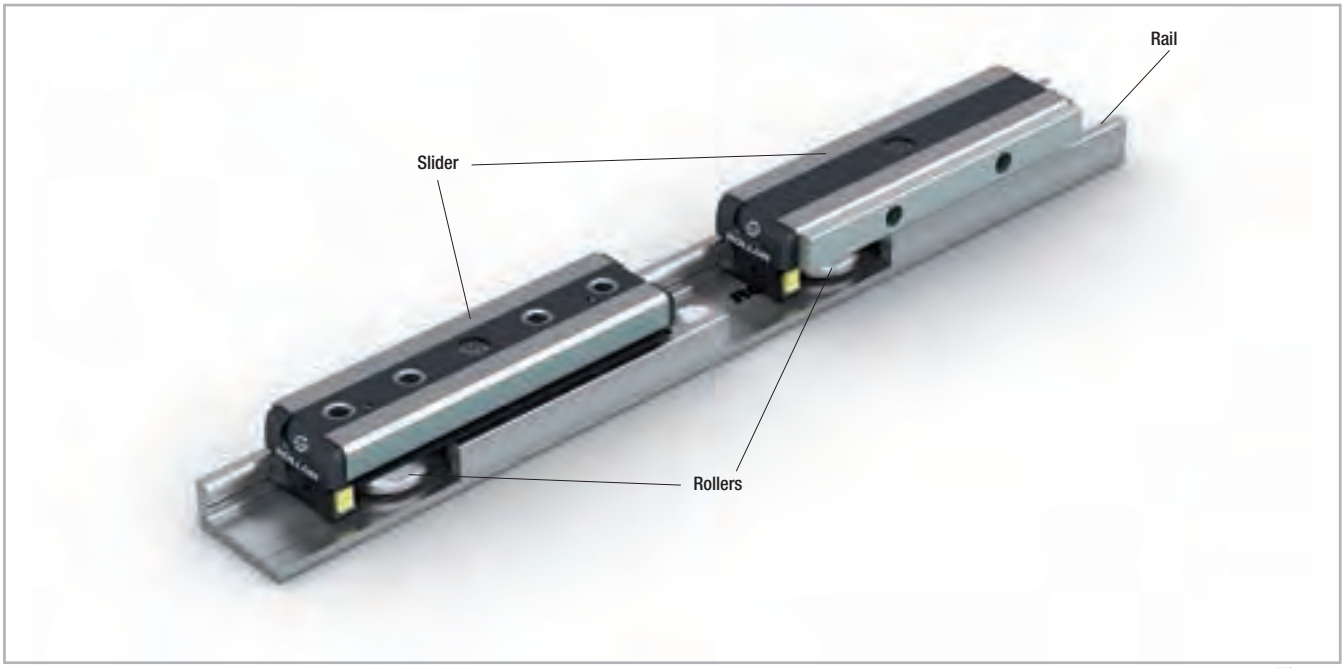

Fig. 11

Performance characteristics:

- Available rail sizes: 18, 28, 43
- Max. operating speed: 7 m/s (276 in/s) (depending on application)
- Max. acceleration: 15m/s² (590.55 in/s²) (depending on application)
- Max. radial load capacity: 10,800 N (per slider)
- Temperature range: -20 °C to +120 °C (-4 °F to +248 °F) briefly up to max. +150 °C (+302 °F)
- Available rail lengths from 160 mm to 3,600 mm (6.3 in to 142 in) in 80-mm increments (3.15 in), longer single rails up to max. 4,080 mm (160.6 in) on request for sizes 28 and 43.
- Rollers material: steel 100Cr6 (also available stainless steel AISI 440)
- Roller pins lubricated for life
- Roller seal/shield: 2RS (splash-proof)
- In sizes 28 and 43 rails and slider bodies are standard zinc-plated according to ISO 2081, raceways are induction hardened and ground.
- In size 18 rails are hardened with Rollon-Nox treatment of deep nitriding and black oxidation and slider bodies are standard zinc-plated according to ISO 2081.
- Rail material of rails size 28-43: cold-drawn carbon steel CF53
- Rail material of rails size 18: cold-drawn carbon steel 20MnCr5

Notes:

- The sliders are equipped with rollers that are in alternating contact with both sides of the raceway. Markings on the body around the roller pins indicate correct arrangement of the rollers to the external load
- With a simple adjustment of the eccentric rollers, the desired clearance or preload on the rail and slider can be set (see pg. CR-35)
- Rails in joined design are available for longer transverse distances (see pg. CR-43).
- Screws of property class 10.9 must be used
- When mounting the rails, it is crucial to ensure that the mounting holes in the structure are properly chamfered (see pg. CR-34 tab. 59)
- The general illustrations show R-sliders as an example
- For rollers size 28 and 43 it is available the stainless steel version (see pg. CR-18).

Configurations and behavior of the slider under yawing moment M_z

Individual slider under M_z moment load

When an overhanging load in an application with a single slider per rail causes an M_z moment in one direction, a 4 to 6 roller Compact Rail slider is available. These sliders are available in both configuration A and B in regards to the roller arrangement to counter the acting M_z moment load. The moment capacity of these sliders in the Mz-direction varies significantly through spacing L_1 and L_2 in accordance with the direction of rotation of M_z.

Especially in the use of two parallel rails, it is extremely important to pay attention to the correct combination of the slider configuration A and B, in order to use the maximum load capacities of the slider.

The diagrams below illustrate this concept of the A and B configuration for sliders with 4 and 6 rollers. The maximum allowable M_z-moment is identical in both directions for all 3 and 5 roller sliders.

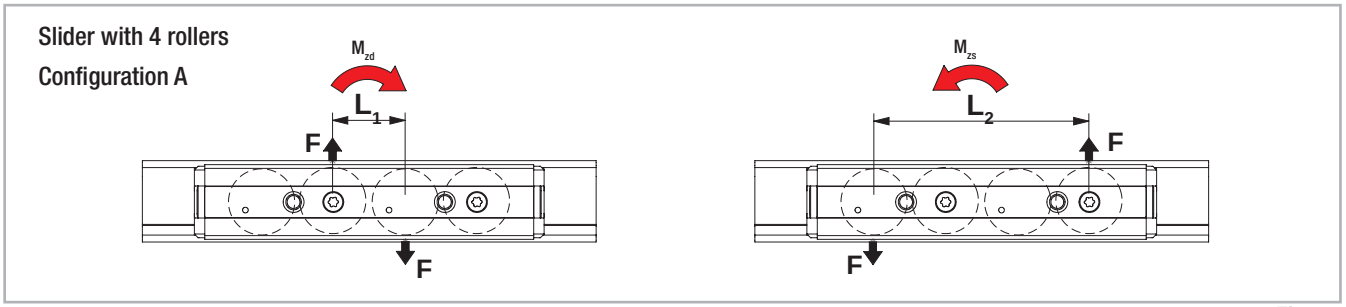

Fig. 12

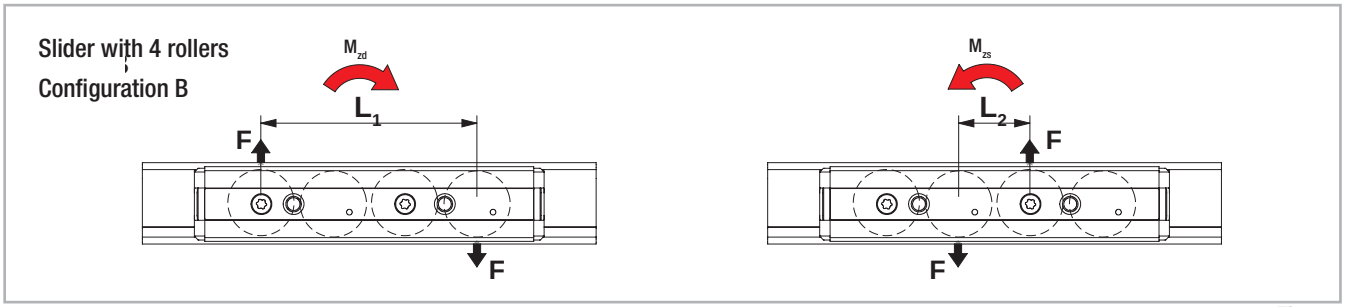

Fig. 13

Two sliders under M_z moment load

When an overhanging load acts on an application with two sliders per rail and causes an M_z-moment in one direction, different support reactions occur on the two sliders. For this reason, an optimal arrangement of slider configurations must be achieved to reach the maximum load capacities. In practice, when using R-sliders with 3 or 5 rollers, the two sliders must be installed rotated by 180° so that the slider is always loaded on the side with the highest number of rollers.

For an even number of rollers this has no effect. The RD-sliders with installation option from above or below cannot be installed due to the position of the rollers in reference to the installation side, therefore they are available in the configurations A and B (see fig. 15).

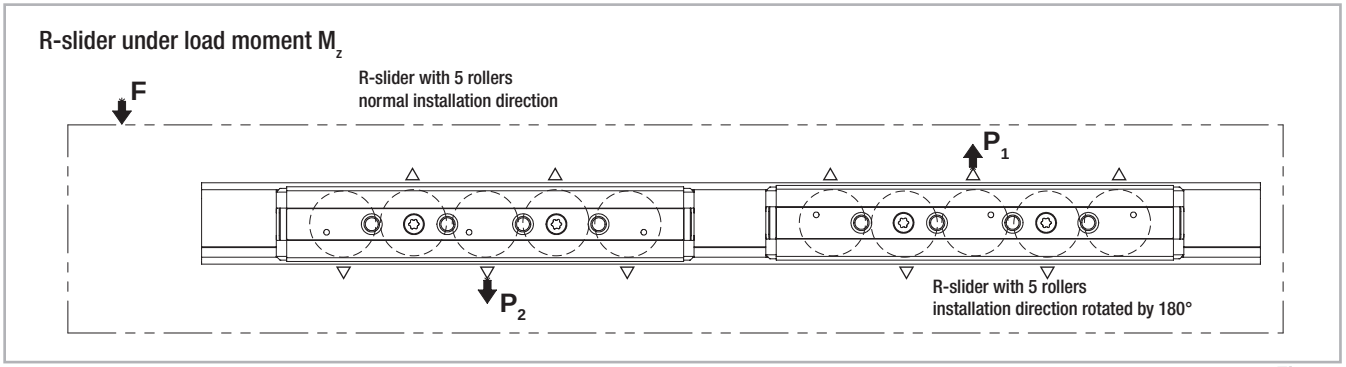

Fig. 14

RD-slider under load moment M_z

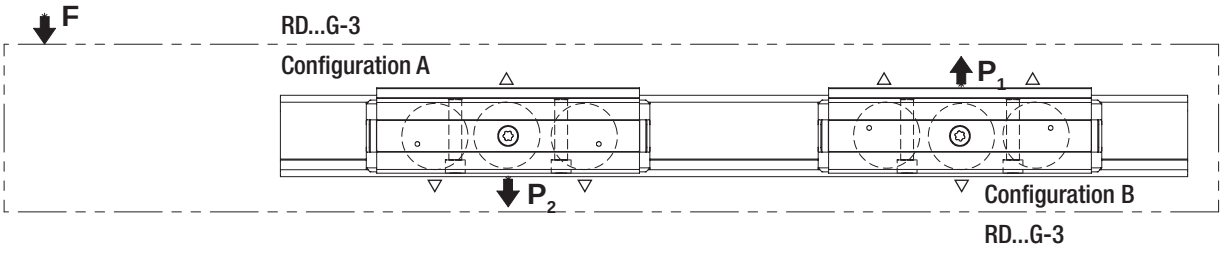

Fig. 15

Slider configurations for various load cases

Arrangement DS

This is the recommended arrangement for use of two sliders under M_z-moment when using one rail. Also see previous page: Two sliders under M_z moment load.

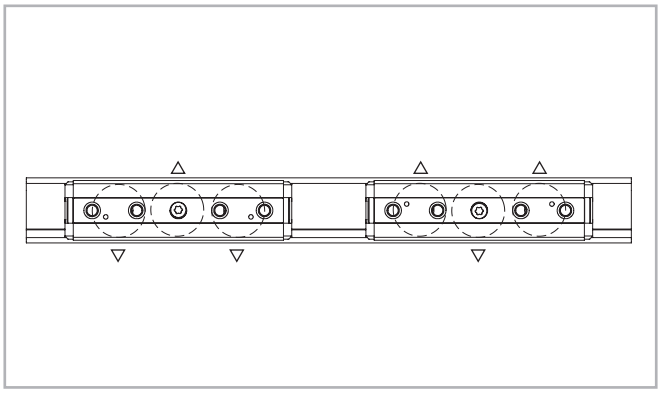

Fig. 16

Arrangement DD

When using a pair of guide rails with two sliders each under M_z moment load, the second system should be designed in arrangement DD. This results in the following combination: one guide rail with two sliders in arrangement DS and the other guide rail with 2 sliders in arrangement DD. This allows even load and moment distribution between the two parallel rails.

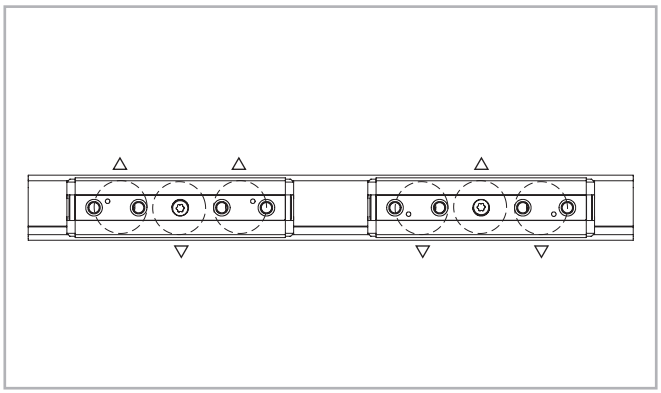

Fig. 17

Arrangement DA

Standard arrangement if no other information is given. This arrangement is recommended if the load point is located within the two outside points of the sliders.

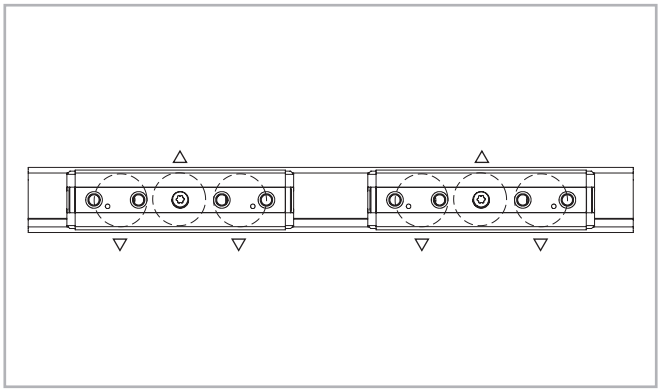

Fig. 18

Load capacities

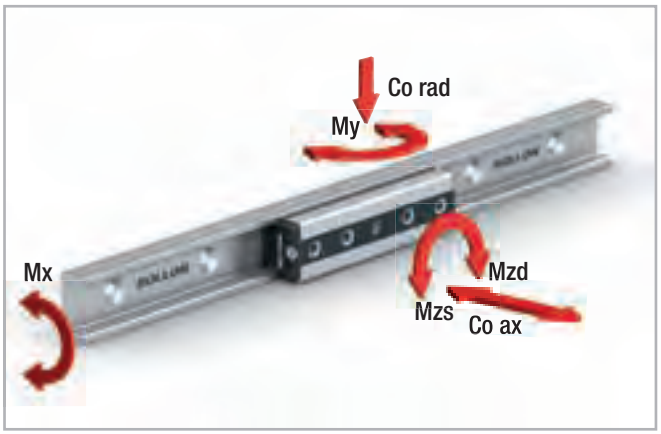

Fig. 19

The load capacities in the following table apply for one slider.
The functional characteristic is related to the nominal floating capacity, for more information see pg. CR-22, CR-23.

Type	Number of rollers	Load capacities and moments							Weight [kg]
		C [N]	Co_{rad} [N]	Co_{ax} [N]	M_x [Nm]	M_y [Nm]	M_z [Nm]		
							M_{zd}	M_{zs}	
RVG18-3 -...	3	3300	1600	690	3	8.3	14.4	14.4	0.055
RVG18-4A -...	4	3300	1600	920	6	13.8	16	48	0.073
RVG18-4B -...	4	3300	1600	920	6	13.8	48	16	0.073
RVG18-5 -...	5	4455	2160	1150	6	18.4	48	48	0.087
RVG18-6A -...	6	4455	2160	1380	9	23	48	80	0.105
RVG18-6B -...	6	4455	2160	1380	9	23	80	48	0.105
RAG18-3 -...	3	3300	1600	460	0	8.3	14.4	14.4	0.055
RAG18-4A -...	4	3300	1600	460	0	13.8	16	48	0.073
RAG18-4B -...	4	3300	1600	460	0	13.8	48	16	0.073
RAG18-5 -...	5	4455	2160	690	0	18.4	48	48	0.087
RAG18-6A -...	6	4455	2160	690	0	23	48	80	0.105
RAG18-6B -...	6	4455	2160	690	0	23	80	48	0.105
RPG18-3 -...	3	3300	1600	0	0	0	14.4	14.4	0.055
RPG18-4A -...	4	3300	1600	0	0	0	16	48	0.073
RPG18-4B -...	4	3300	1600	0	0	0	48	16	0.073
RPG18-5 -...	5	4455	2160	0	0	0	48	48	0.087
RPG18-6A -...	6	4455	2160	0	0	0	48	80	0.105
RPG18-6B -...	6	4455	2160	0	0	0	80	48	0.105
RUG18-3 -...	3	2300	1120	0	0	0	10.1	10.1	0.052
RUG18-4A -...	4	2300	1120	0	0	0	11.2	33.6	0.070
RUG18-4B -...	4	2330	1120	0	0	0	33.6	11.2	0.070
RUG18-5 -...	5	3105	1512	0	0	0	33.6	33.6	0.084
RUG18-6A -...	6	3105	1512	0	0	0	33.6	56	0.1
RUG18-6B -...	6	3105	1512	0	0	0	56	33.6	0.1

Tab. 1

Type*	Number of rollers	Load capacities and moments							Weight [kg]
		C [N]	Co_{rad} [N]	Co_{ax} [N]	M_x [Nm]	M_y [Nm]	M_z [Nm]		
							M_{zd}	M_{zs}	
RV28G-3 -...	3	6000	3200	1380	9.2	25.3	44	44	0.24
RV28G-4A -...	4	6000	3200	1840	18.4	34.5	40	120	0.29
RV28G-4B -...	4	6000	3200	1840	18.4	34.5	120	40	0.29
RV28G-5 -...	5	8100	4320	2300	18.4	46	120	120	0.36
RV28G-6A -...	6	8100	4320	2760	27.6	57.5	120	200	0.4
RV28G-6B -...	6	8100	4320	2760	27.6	57.5	200	120	0.4
RA28G-3 -...	3	6000	3200	920	0	25.3	44	44	0.24
RA28G-4A -...	4	6000	3200	920	0	34.5	40	120	0.29
RA28G-4B -...	4	6000	3200	920	0	34.5	120	40	0.29
RA28G-5 -...	5	8100	4320	1380	0	46	120	120	0.36
RA28G-6A -...	6	8100	4320	1380	0	57.5	120	200	0.4
RA28G-6B -...	6	8100	4320	1380	0	57.5	200	120	0.4
RP28G-3 -...	3	6000	3200	0	0	0	44	44	0.24
RP28G-4A -...	4	6000	3200	0	0	0	40	120	0.29
RP28G-4B -...	4	6000	3200	0	0	0	120	40	0.29
RP28G-5 -...	5	8100	4320	0	0	0	120	120	0.36
RP28G-6A -...	6	8100	4320	0	0	0	120	200	0.4
RP28G-6B -...	6	8100	4320	0	0	0	200	120	0.4
RU28G-3 -...	3	4200	2240	0	0	0	30.8	30.8	0.24
RU28G-4A -...	4	4200	2240	0	0	0	28	84	0.27
RU28G-4B -...	4	4200	2240	0	0	0	84	28	0.27
RU28G-5 -...	5	5670	3024	0	0	0	84	84	0.33
RU28G-6A -...	6	5670	3024	0	0	0	84	140	0.39
RU28G-6B -...	6	5670	3024	0	0	0	140	84	0.39
RDV28G-3A -...	3	6000	3200	1380	9.2	25.3	44	44	0.28
RDV28G-3B -...	3	6000	3200	1380	9.2	25.3	44	44	0.28
RDV28G-5A -...	5	8100	4320	2300	18.4	46	120	120	0.41
RDV28G-5B -...	5	8100	4320	2300	18.4	46	120	120	0.41
RDA28G-3A -...	3	6000	3200	920	0	25.3	44	44	0.39
RDA28G-3B -...	3	6000	3200	920	0	25.3	44	44	0.39
RDA28G-5A -...	5	8100	4320	1380	0	46	120	120	0.41
RDA28G-5B -...	5	8100	4320	1380	0	46	120	120	0.41
RDP28G-3A -...	3	6000	3200	0	0	0	44	44	0.39
RDP28G-3B -...	3	6000	3200	0	0	0	44	44	0.39
RDP28G-5A	5	8100	4320	0	0	0	120	120	0.41
RDP28G-5B -...	5	8100	4320	0	0	0	120	120	0.41
RDU28G-3A -...	3	4200	2240	0	0	0	30.8	30.8	0.25
RDU28G-3B -...	3	4200	2240	0	0	0	30.8	30.8	0.25
RDU28G-5A -...	5	5670	3024	0	0	0	84	84	0.38
RDU28G-5B -...	5	5670	3224	0	0	0	84	84	0.38

Tab. 2

Type*	Number of rollers	Load capacities and moments							Weight [kg]
		C [N]	Co_{rad} [N]	Co_{ax} [N]	M_x [Nm]	M_y [Nm]	M_z [Nm]		
							M_{zd}	M_{zs}	
RV43G-3	3	15200	8000	3570	36.9	97.6	164	164	0.77
RV43G-4A	4	15200	8000	4760	73.8	135.7	152	456	0.99
RV43G-4B	4	15200	8000	4760	73.8	135.7	456	152	0.99
RV43G-5	5	20520	10800	5950	73.8	195.2	452.4	452.4	1.19
RV43G-6A	6	20520	10800	7140	110.7	224.3	452.4	754	1.42
RV43G-6B	6	20520	10800	7140	110.7	224.3	754	452.4	1.42
RA43G-3	3	15200	8000	2380	0	97.6	164	164	0.77
RA43G-4A	4	15200	8000	2380	0	135.7	152	456	0.99
RA43G-4B	4	15200	8000	2380	0	135.7	456	152	0.99
RA43G-5	5	20520	10800	3570	0	195.2	452.4	452.4	1.19
RA43G-6A	6	20520	10800	3570	0	224.3	452.4	754	1.42
RA43G-6B	6	20520	10800	3570	0	224.3	754	452.4	1.42
RP43G-3	3	15200	8000	0	0	0	164	164	0.77
RP43G-4A	4	15200	8000	0	0	0	152	456	0.99
RP43G-4B	4	15200	8000	0	0	0	456	152	0.99
RP43G-5	5	20520	10800	0	0	0	452.4	452.4	1.19
RP43G-6A	6	20520	10800	0	0	0	452.4	754	1.42
RP43G-6B	6	20520	10800	0	0	0	754	452.4	1.42
RU43G-3	3	11400	5600	0	0	0	114.8	114.8	0.75
RU43G-4A	4	11400	5600	0	0	0	106.4	319.2	0.96
RU43G-4B	4	11400	5600	0	0	0	319.2	106.4	0.96
RU43G-5	5	15390	7560	0	0	0	316.7	316.7	1.16
RU43G-6A	6	15390	7560	0	0	0	316.7	527.8	1.38
RU43G-6B	6	15390	7560	0	0	0	527.8	316.7	1.38
RDV43G-3A	3	15200	8000	3570	36.9	97.6	164	164	0.85
RDV43G-3B	3	15200	8000	3570	36.9	97.6	164	164	0.85
RDV43G-5A	5	20520	10800	5950	74.8	95.2	452.4	452.4	1.3
RDV43G-5B	5	20520	10800	5950	74.8	95.2	452.4	452.4	1.3
RDA43G-3A	3	15200	8000	2380	0	97.6	164	164	0.85
RDA43G-3B	3	15200	8000	2380	0	97.6	164	164	0.85
RDA43G-5A	5	20520	10800	3570	0	95.2	452.4	452.4	1.3
RDA43G-5B	5	20520	10800	3570	0	95.2	452.4	452.4	1.3
RDP43G-3A	3	15200	8000	0	0	0	164	164	0.85
RDP43G-3B	3	15200	8000	0	0	0	164	164	0.85
RDP43G-5A	5	20520	10800	0	0	0	452.4	452.4	1.3
RDP43G-5B	5	20520	10800	0	0	0	452.4	452.4	1.3
RDU43G-3A	3	11400	5600	0	0	0	114.8	114.8	0.83
RDU43G-3B	3	11400	5600	0	0	0	114.8	114.8	0.83
RDU43G-5A	5	15390	7560	0	0	0	316.7	316.7	1.27
RDU43G-5B	5	15390	7560	0	0	0	316.7	316.7	1.27

Tab. 3

Product dimensions

TG / TMG -rail

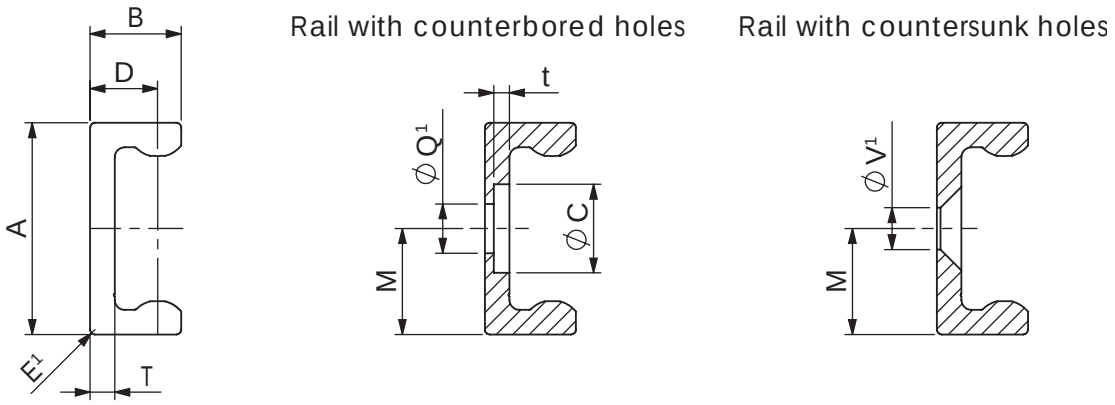

Q¹ Fixing holes for Torx® screws with low head (custom design) included in scope of supply
V¹ Fixing holes for countersunk head screws according to DIN 7991

Fig. 20

Type	Size	A [mm]	B [mm]	M [mm]	E¹ [mm]	T [mm]	C [mm]	D [mm]	Weight [Kg/m]	t [mm]	Q¹ [mm]	V¹ [mm]
TMGC TMGV	18	18	9.5	9	1	2.9	9	7.1	0.68	1.9	M4	M4
TGC TGV	28	28	11.3	14	1	3	11	8.2	1.25	2	M5	M5
	43	43	18.5	21.5	1	5	18	13.7	2.9	3.2	M8	M8

Tab. 4

Rail length

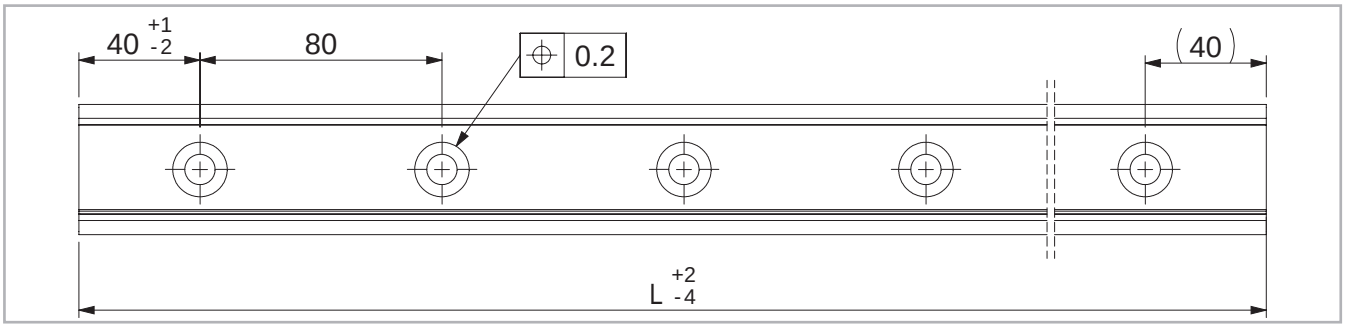

Fig. 21

Type	Size	Min length [mm]	Max length [mm]	Available standard lengths L [mm]
TMGC TMGV	18	240	2960	160 - 240 - 320 - 400 - 480 - 560 - 640 - 720 - 800 - 880 - 960 - 1040 - 1120 - 1200 - 1280 - 1360 - 1440 - 1520 - 1600 - 1680 - 1760 - 1840 - 1920 - 2000 - 2080 - 2160 - 2240 - 2320 - 2400 - 2480 - 2560 - 2640 - 2720 - 2800 - 2880 - 2960 - 3040 - 3120 - 3200 - 3360 - 3440 - 3520 - 3600
TGC TGV	28	160	3600	
	43	160	3600	

Longer single rails up to max. 4080 mm on request for sizes 28 and 43
Longer rail systems see pg. CR-43 Joined rails

Tab. 5

R-version slider

R-series

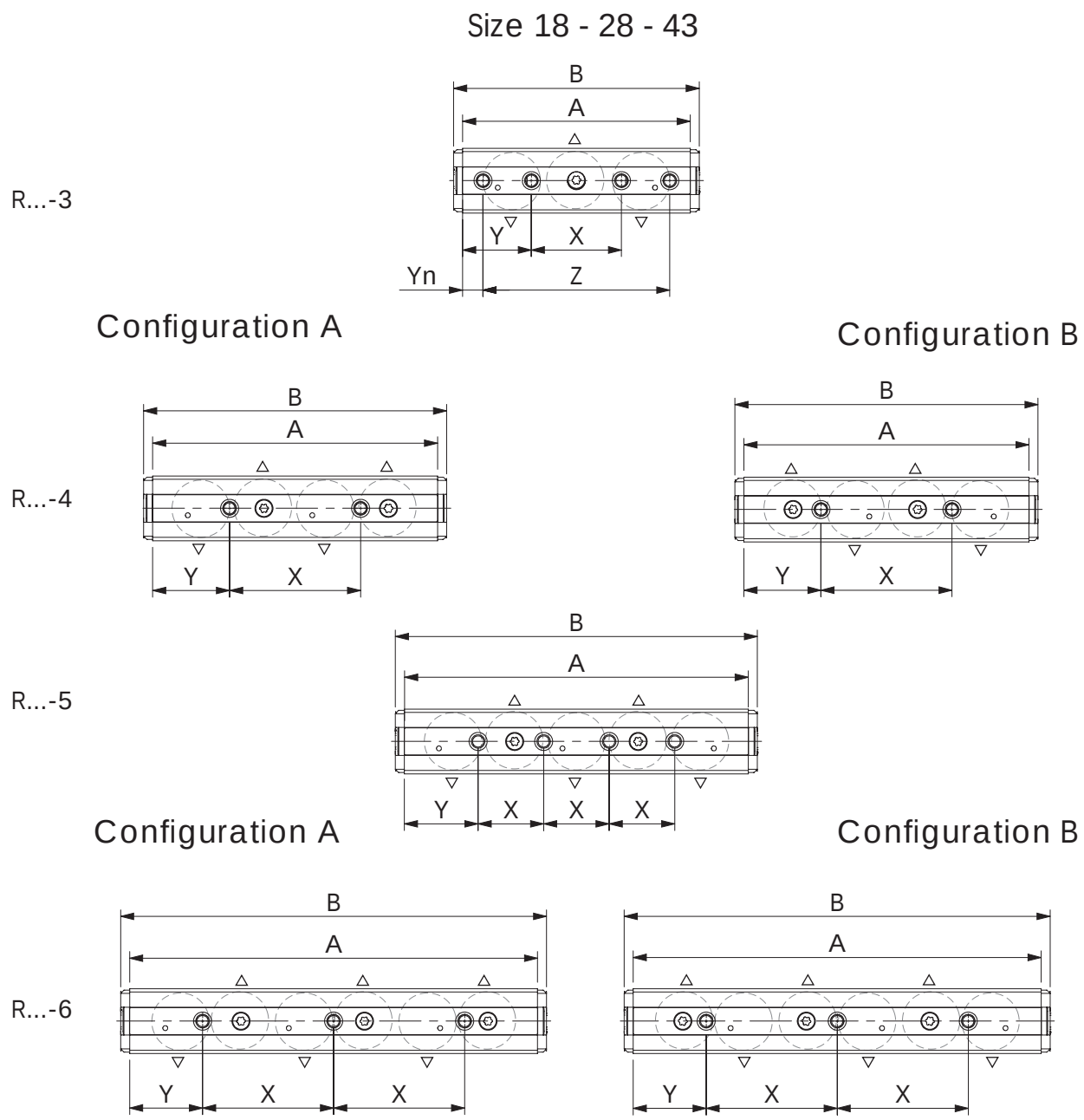

Fig. 22

R-slider with double row ball bearing rollers for use in TG / TMG -rail

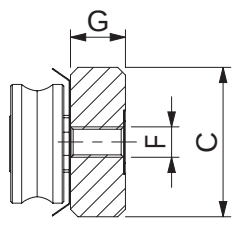

Fig. 23

Type	Size	No. of rollers	A [mm]	B [mm]	C [mm]	G [mm]	F [mm]	X [mm]	Y [mm]	Yn [mm]	Z [mm]	No. of holes
RVG… RAG… RPG… RUG…	18	3	70	78	16	4.8	M5	20	25	9	52	3
		4	92	100				40	26	-	-	4
		5	112	120				20	26			5
		6	132	140				40	26			6
RV…G RA…G RP…G RU…G	28	3	97	108	24.9	9.7	M5	35	31	9.5	78	4
		4	117	128				50	33.5	-	-	2
		5	142	153				25	33.5			4
		6	167	178				50	33.5			3
	43	3	139	150	39.5	14.5	M8	55	42	12.5	114	4
		4	174	185				80	47	-	-	2
		5	210	221				40	45			4
		6	249	260				80	44.5			3

For information about the roller sliders configuration, see pg. CR-22 and CR-23.
For information about the roller type, see pg. CR-18, tab. 10.

Tab. 6

RD-version slider

RD-series

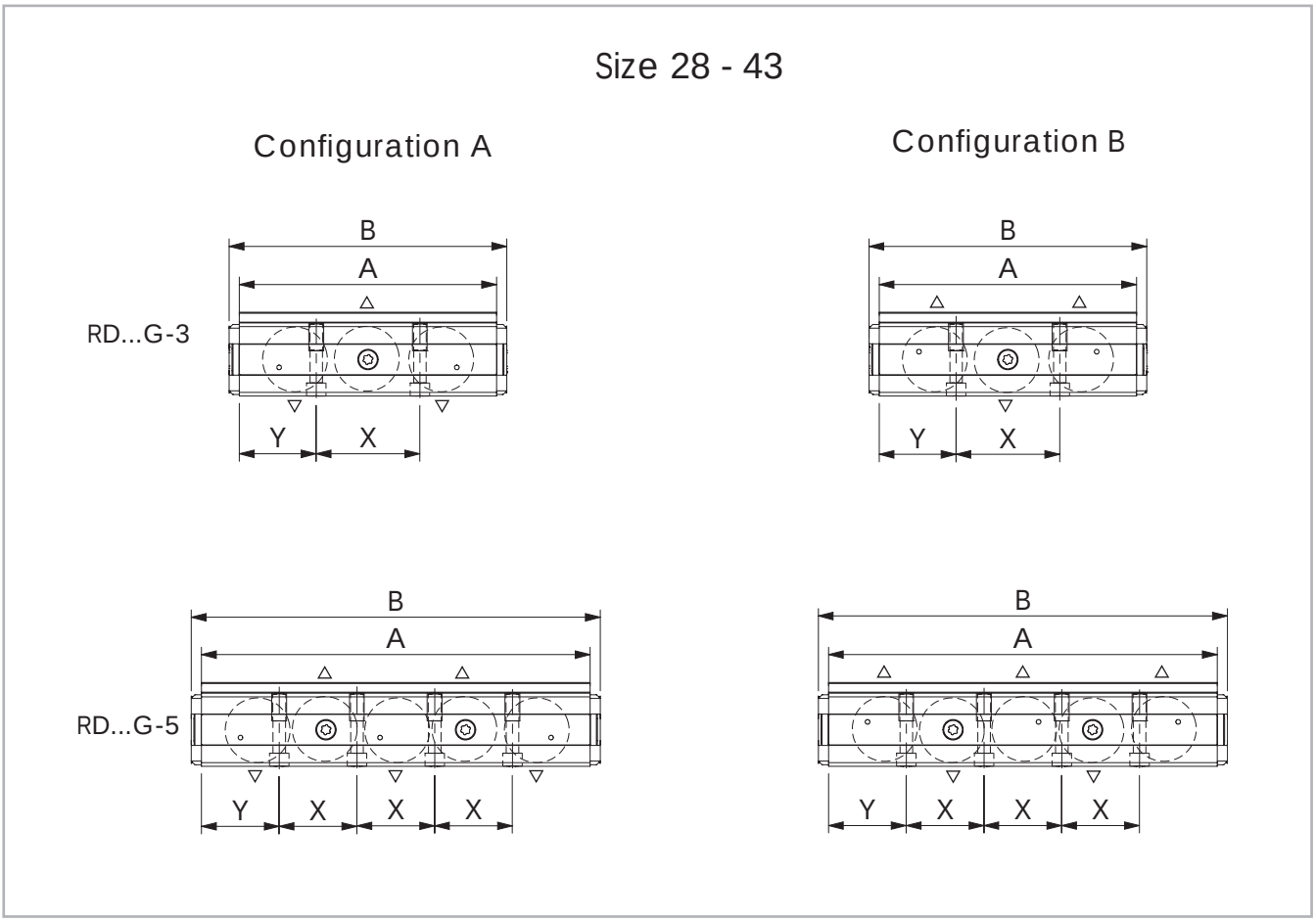

Fig. 24

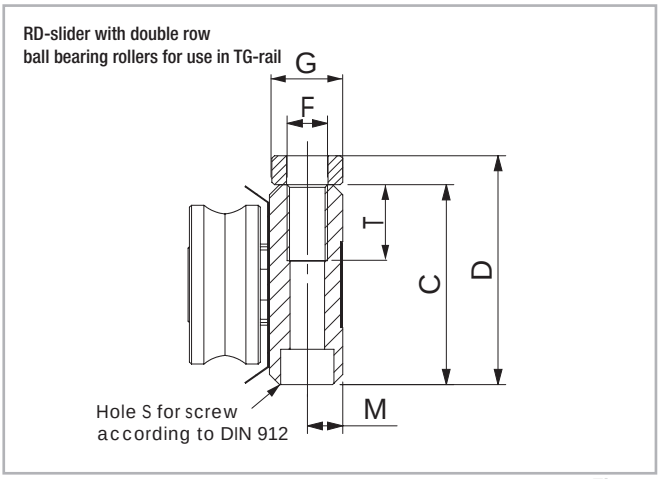

Fig. 25

Type	Size	No. of rollers	A [mm]	B [mm]	C [mm]	D [mm]	T [mm]	M [mm]	S	G [mm]	F	X [mm]	Y [mm]	No. of holes
RDV…G RDA…G RDP…G RDU…G	28	3	97	108	29.4	30.45	15	4.7	M5	9.7	M6	36	30.5	2
		5	142	153								27	30.5	4
	43	3	139	150	39.5	45.25	15	7	M6	14.5	M8	56	41.5	2
		5	210	221								42	42	4

For information about the roller sliders configuration, see pg. CR-22 and CR-23.
For information about the roller type, see pg. CR-18, tab. 10.

Tab. 7

TG / TMG -rail with sliders

TG-rail with R-slider

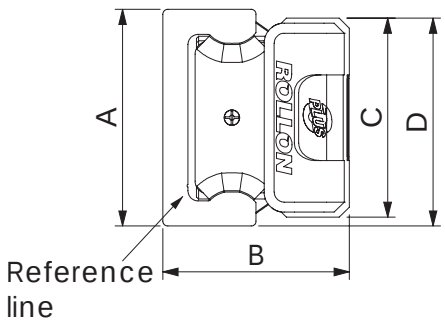

TG-rail with RD-slider

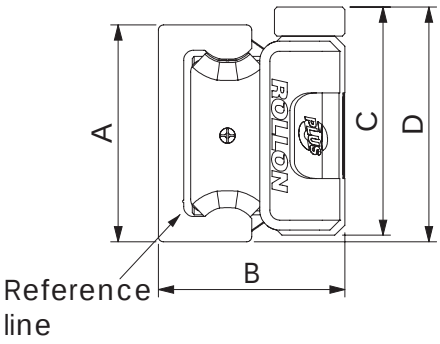

Fig. 26

Configuration	Size	A [mm]		B [mm]		C [mm]		D [mm]	
TMG... / R...G	18	18	+0.2 -0.10	16.5	±0.15	16	0 -0.2	17	+0.2 -0.4
TG... / R...G	28	28	+0.2 -0.10	24	±0.15	24.9	0 -0.2	26.45	+0.2 -0.4
	43	43	+0.3 -0.10	37	±0.15	39.5	0 -0.2	41.25	+0.2 -0.4
TG... / RD...G	28	28	+0.2 -0.10	24	±0.15	24.9	0 -0.2	32	+0.2 -0.4
	43	43	+0.3 -0.10	37	±0.15	39.5	0 -0.2	47	+0.2 -0.4

Tab. 8

Offset of fixing holes

Principle representation of offset

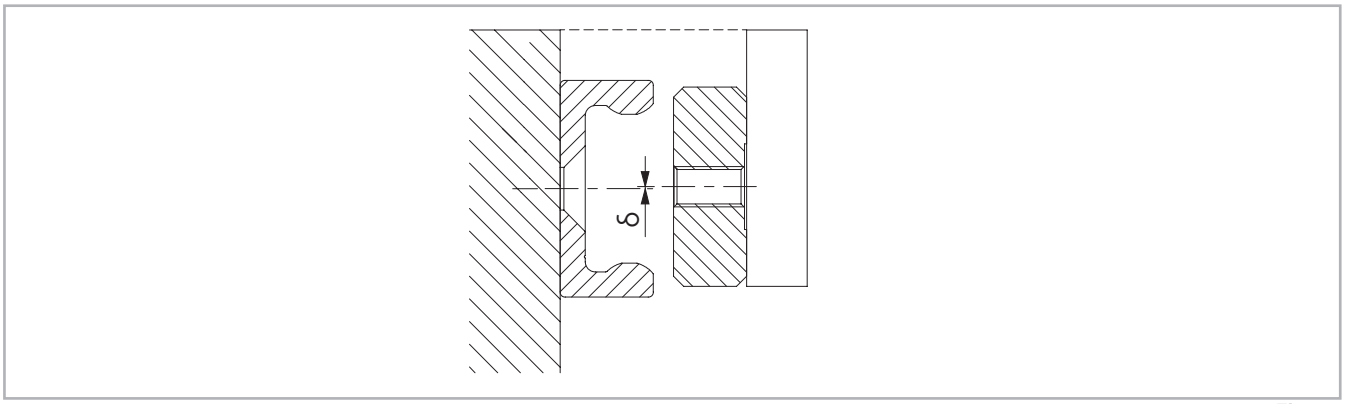

Fig. 27

Configuration	Size	δ nominal [mm]	δ maximum [mm]	δ minimum [mm]
TMG... / R...G	18	0	-0.25	+0.25
TG... / R...G	28			
	43			
TG... / RD...G	28			
	43			

Tab. 9

Accessories

Rollers

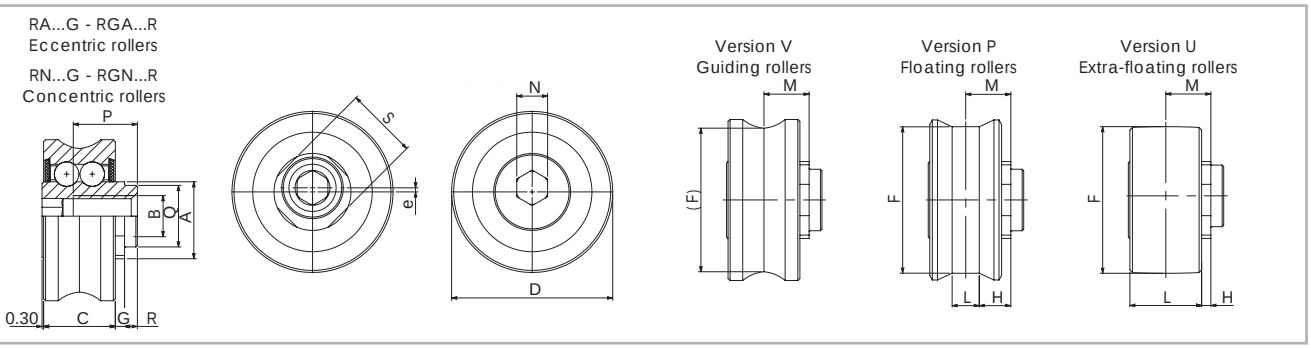

Seals: 2RS splash proof seal.
Note: the rollers are lubricated for life.

Fig. 28

Type		e [mm]	D [mm]	C [mm]	M [mm]	G [mm]	A [mm]	B [mm]	P [mm]	F [mm]	L [mm]	H [mm]	R [mm]	Q [mm]	S	N	C [N]	Co_{rad} [N]	Co_{ax} [N]	Weight [kg]
Steel	Inox																			
RNVG18	-	-	13.2	7	4.6	1.1	6.8	M4	5.4	-	-	-	-	-	-	3	1650	800	230	0.01
RNPG18	-		13.2							11.96	2.5	3.35					1650	800	0	
RNUG18	-		11.95							11.95	6	1.6					1150	560	0	
RAVG18	-	0.4	13.2							-	-	-					1650	800	230	
RAPG18	-		13.2							11.96	2.5	3.35					1650	800	0	
RAUG18	-		11.95							11.95	6	1.6					1150	560	0	
RGNV28R	RGNVX28R	-	20.75	9	6.1	1.6	10.8	M5	8	-	-	-	1.5	8 h7	10	4	3000	1600	460	0.02
RGNP28R	RGNPX28R		20.75							18.81	4	4.1					3000	1600	0	
RGNU28R	RGNUX28R		18.81							18.81	8	2.1					2300	1120	0	
RGAV28R	RGAVX28R	0.6	20.75							-	-	-					3000	1600	460	
RGAP28R	RGAPX28R		20.75							11.96	4	4.1					3000	1600	0	
RGAU28R	RGAUX28R		18.81							11.95	8	2.1					2300	1120	0	
RGNV43R	RGNVX43R	-	31.4	14	8.8	1.8	15	M8	12.5	-	-	-	2.5	11 h7	14	6	7600	4000	1190	0.05
RGNP43R	RGNPX43R		31.2							28.59	5.3	6.15					7600	4000	0	
RGNU43R	RGNUX43R		28.59							28.59	13	2.3					5700	2800	0	
RGAV43R	RGAVX43R	0.8	31.4							-	-	-					7600	4000	1190	
RGAP43R	RGAPX43R		31.2							28.59	5.3	6.15					7600	4000	0	
RGAU43R	RGAUX43R		28.59							28.59	13	2.3					5700	2800	0	

Rollers size 18 are without protruding pin.

Tab. 10

Wipers

Pair of wipers WR for R- / RD- slider

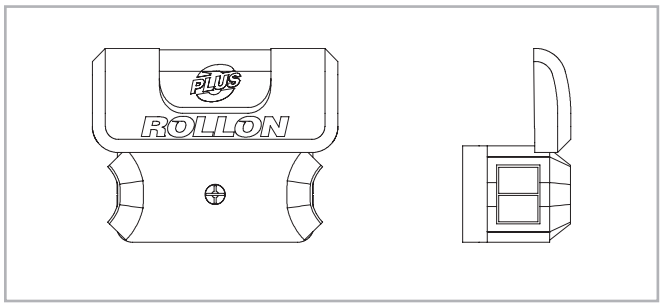

Fig. 29

Rail size	Pair of wipers
18	ZK-WR18G
28	ZK-WR28G
43	ZK-WR43G

Tab. 11

Alignment fixtures

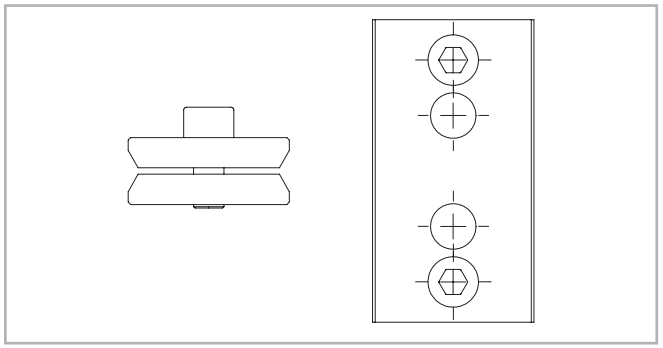

Fig. 30

Rail size	Alignment fixture
18	ATMG18
28	ATG28
43	ATG43

Tab. 12

Fixing screws

When a rail with counterbored holes is delivered, the Torx® screws are provided in the right quantity.

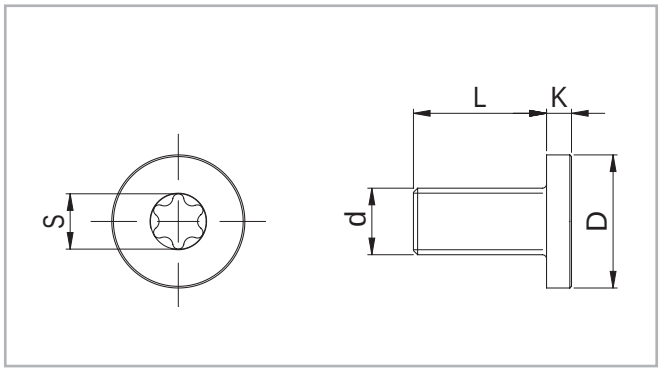

Fig. 31

Rail size	d	D [mm]	L [mm]	K [mm]	S	Tightening torque [Nm]
18	M4 x 0.7	8	8	2	T20	3
28	M5 x 0.8	10	10	2	T25	9
43	M8 x 1.25	16	16	3	T40	22

Tab. 13

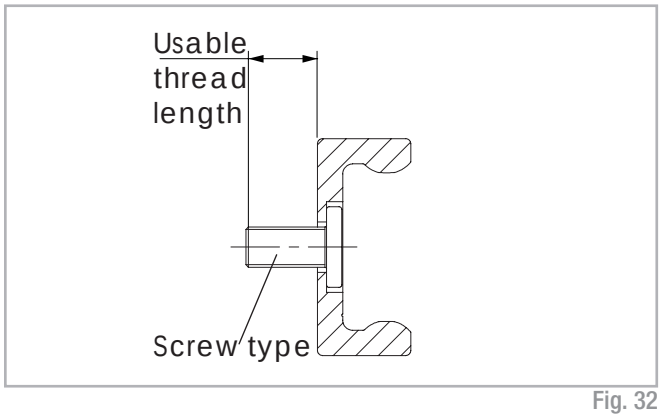

Fig. 32

Rail size	Screw type	Usable thread length [mm]
18	M4 x 8	7.2
28	M5 x 10	9
43	M8 x 16	14.6

Tab. 14

Technical Instructions

Linear accuracy

Linear accuracy is defined as the maximum deviation of the slider in the rail based on the side and support surface during straight line movement.

The linear accuracy, depicted in the graphs below, applies to rails that are carefully installed with all the provided screws on a level and rigid foundation.

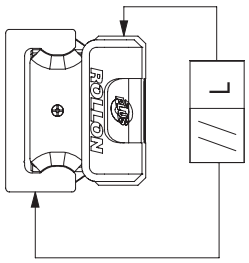

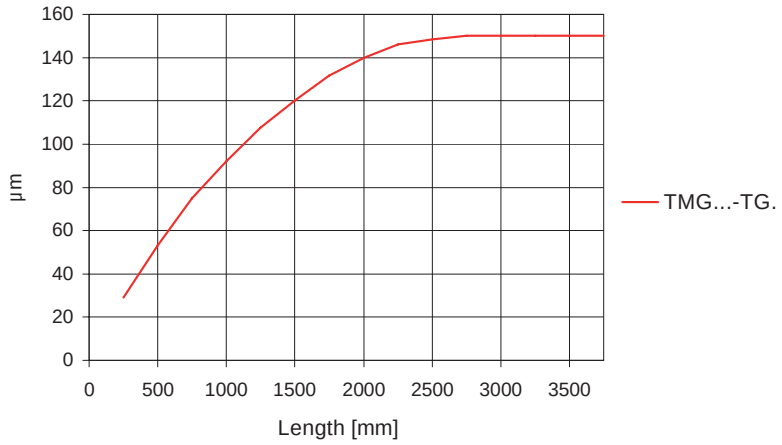

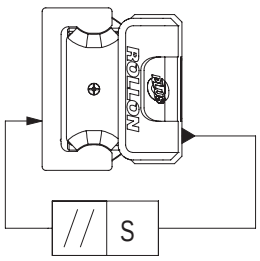

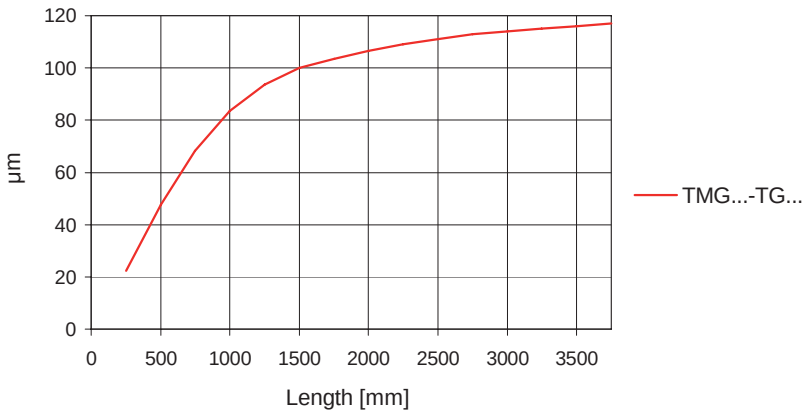

Fig. 33

Deviation of accuracy with two 3 roller sliders in one rail

Type	
ΔL [mm] Slider with equal arrangement 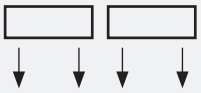	0.2
ΔL [mm] Slider with opposite arrangement 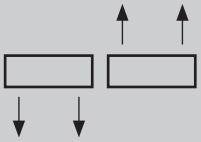	1.0
ΔS [mm]	0.05

Tab. 15

Points of contact between rollers and raceways

Guiding rollers (Version V)

The guiding rollers have two contact points with the raceways. This creates a well constrained movement of rollers on the raceway, in both radial and axial direction.

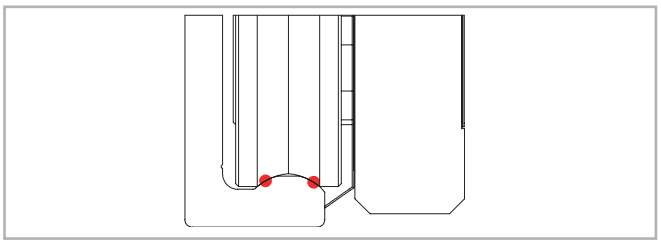

Fig. 34

Floating rollers (Version P)

The floating rollers engage only the peak of the raceway. They are constrained radially but allowed to float in the axial direction between the two shoulders. The rollers can also rotate a little.

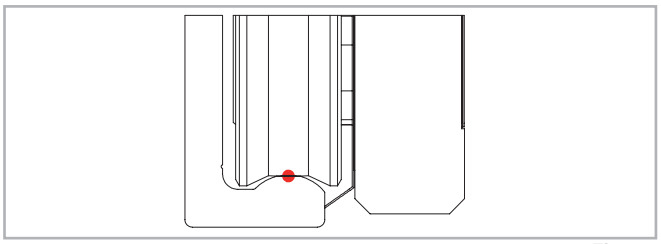

Fig. 35

Extra-floating rollers (Version U)

The extra-floating rollers engage only the peak of the raceway. They are constrained radially but allowed to float in the axial direction without limitation. The completely flat surface of the rollers allows an axial travel wider than the floating rollers, and they can also rotate a little.
(Note: being free from lateral shoulders, extra-floating rollers could run out of the rail or against the bottom rail when exceeding the nominal floating capacity)

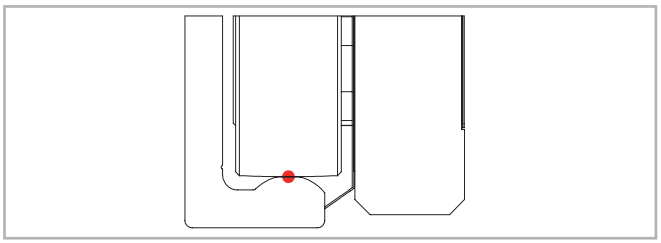

Fig. 36

Sliders composition

Guiding sliders (RV -slider)

Guiding sliders are built only with guiding rollers. For this reason, they are completely constrained and can support loads and moments in all directions, especially the radial ones.

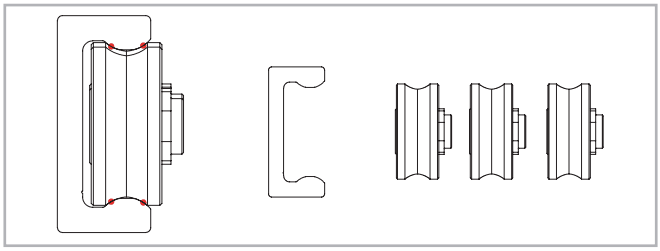

Fig. 37

Floating sliders (RP -slider)

Floating sliders are built only with floating rollers. They are able to slightly travel axially and to rotate a bit without affecting the preload or the smooth running quality.

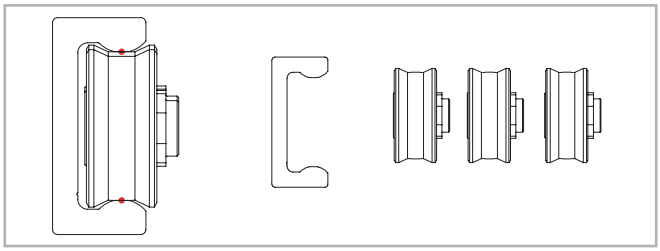

Fig. 38

Extra-floating sliders (RU -slider)

Extra-floating sliders are built only with extra-floating rollers. They are able to fully travel axially and to rotate a bit without affecting the preload or the smooth running quality. (Note: being free from lateral shoulders, extra-floating sliders could run out of the rail or against the bottom rail when exceeding the nominal floating capacity).

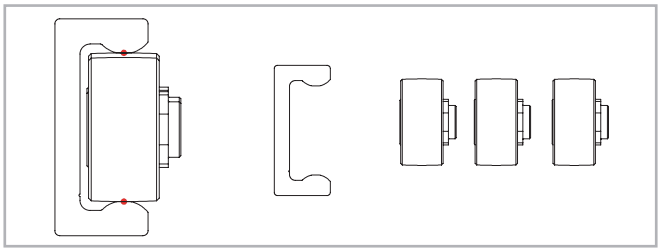

Fig. 39

Rotating sliders (RA -slider)

Rotating sliders are built mixing guiding and floating rollers. They are able to carry full radial load and retain the ability to guide the payload as it travels, while also rotating a bit without affecting the preload or the smooth running quality. Rotating sliders are used to absorb angular errors in the mounting surfaces.

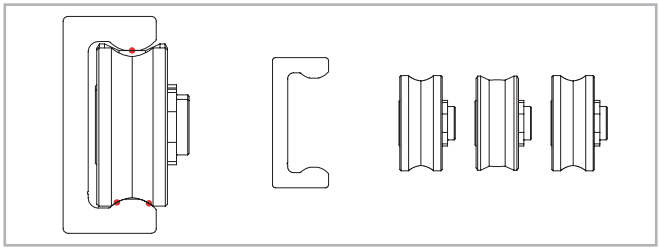

Fig. 40

V+P/U-system tolerance compensation

Axial deviations in parallelism

This problem occurs fundamentally by insufficient precision in the axial parallelism of the mounting surfaces, which results in an excessive load on the slider and thus causes drastically reduced service life.

The combination of two rails, one featuring a RV-slider and one featuring a RP-slider or RU-slider, creates a system that allows to compensate large axial misalignment errors. The limit is set by the axial misalignment permitted by the RP- or RU-slider.



Fig. 41

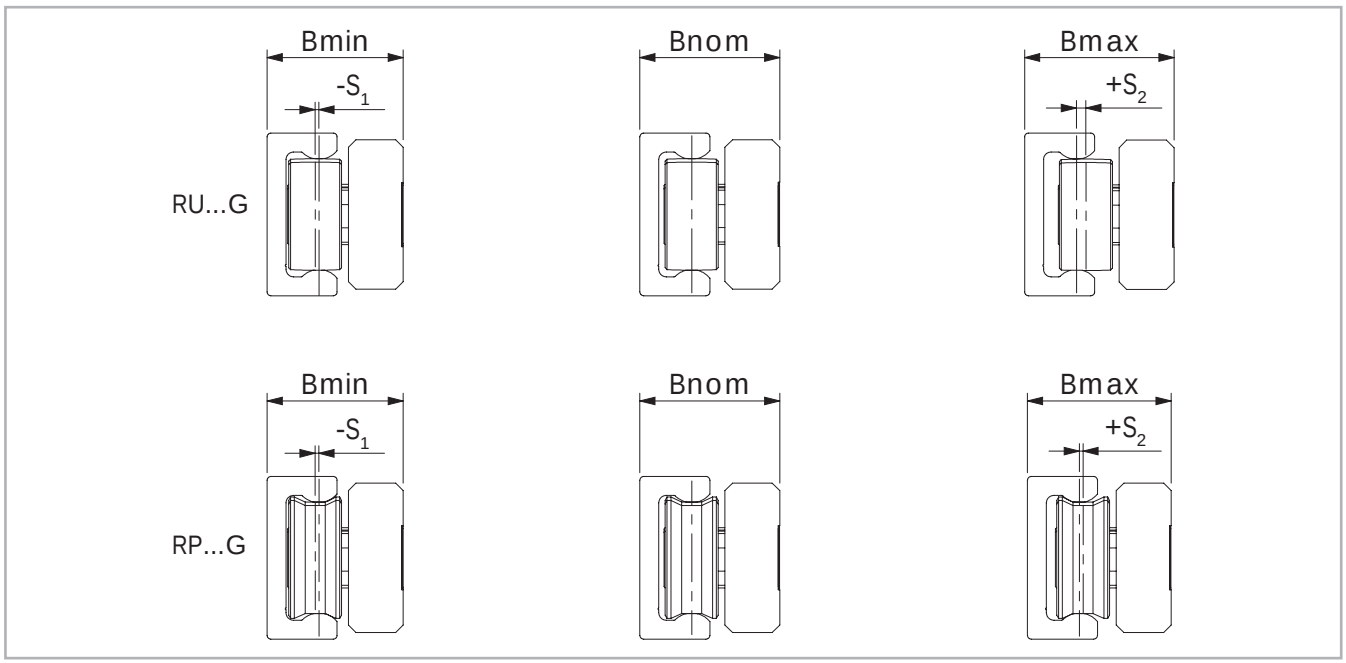

Fig. 42

Maximum offset

RP-sliders feature floating rollers that are able to slightly travel axially between the two shoulders, while RU-sliders feature extra-floating rollers that are able to fully travel axially without constraints. The maximum axial offset that can be compensated is made up of the combined values S_1 and S_2 listed in table 16. Considered from a nominal value B_{nom} as the starting point, S_1 indicates the maximum offset into the rail, while S_2 represents the maximum offset towards the outside of the rail.

Slider type	S_1 [mm]	S_2 [mm]	B_{min} [mm]	B_{nom} [mm]	B_{max} [mm]
RPG18	0.4	0.4	16.1	16.5	16.9
RP28G RDP28G	0.4	0.4	23.6	24	24.4
RP43G RDP43G	1	1	36	37	38
RUG18	0.4	1	16.1	16.5	17.5
RU28G RDU28G	0.4	2	23.6	24	26
RU43G RDU43G	1	2.5	36	37	39.5

Tab. 16

The application example in the adjacent drawing (see fig. 44) shows that the V+P/U-system implements a problem-free function of the slider even with an angled offset in the mounting surfaces.

If the length of the guide rails is known, the maximum allowable angle deviation of the screwed surfaces can be determined using this formula (the floating slider moves here from the innermost position S_1 to outermost position S_2):

$$\alpha = \arctan\frac{S^*}{L}$$

S^* = Sum of S_1 and S_2
L = Length of rail

Fig. 43

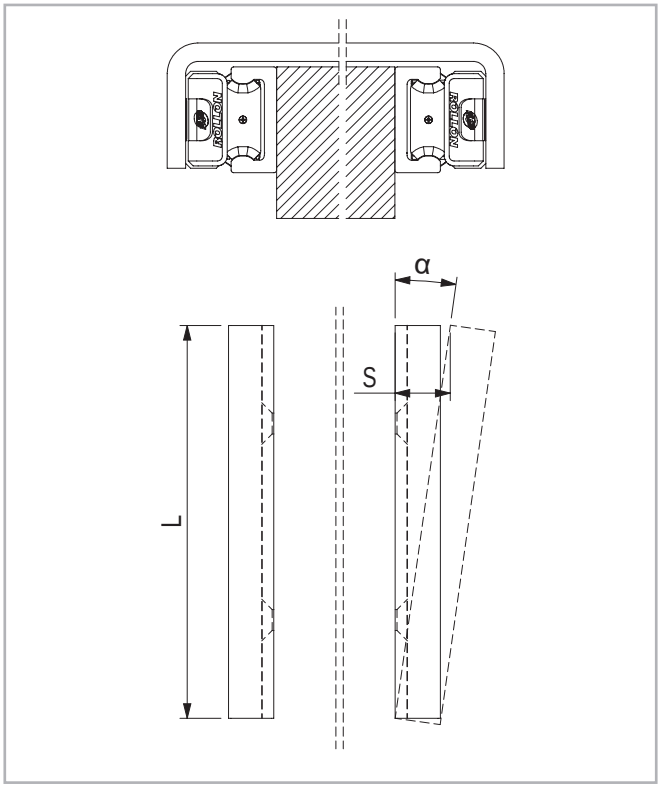

Fig. 44

The following table (tab. 17) contains guidelines for this maximum angle deviation α, achievable with the longest guide rail from one piece.

Size	Rail length [mm]	Offset S [mm]	Angle α [°]
RPG18	2960	0.8	0.015
RP28G	3600	0.8	0.012
RP43G	3600	2	0.031
RUG18	2000	1.4	0.040
RU28G	3600	2.4	0.038
RU43G	3600	3.5	0.055

Tab. 17

The V+P/U-system can be designed in different arrangements (see fig. 45). A TG-rail with RV-slider accepts the vertical components of load A TG-rail with RP-slider or RU-slider slider attached underneath the component to be guided prevents the vertical panel from swinging and is used as moment support. In addition, a vertical offset in the structure, as well as possible existing unevenness of the support surface, is compensated.



Fig. 45

A+P/U-system tolerance compensation

Deviations in parallelism in two planes

The A+P/U-system, like the V+P/U, can compensate for axial deviations in parallelism. The RP- or RU-slider allows to correct the longitudinal parallelism error and, additionally, the RA-slider can rotate in the rail, to compensate for other deviations in parallelism, e.g. height offset.

RA-sliders are built mixing guiding and floating rollers. They carry the full radial load and retain the ability to guide the payload as it travels, while being able to rotate in the rail without affecting the preload or the smooth running quality. The combination of two rails, one featuring a RA-slider and one featuring a RP- or RU-slider, can be used to absorb both axial and angular errors in the mounting surfaces.



Fig. 46

The maximum allowable rotation angle of the RA-sliders are shown in the following table 18 and figure 47. α_1 is the maximum rotation angle counterclockwise, α_2 is clockwise.

Slider type	α_1 [°]	α_2 [°]
RAG18	1	1
RA28G RDA28G	0.85	0.85
RA43G RDA43G	1.3	1.3

Tab. 18

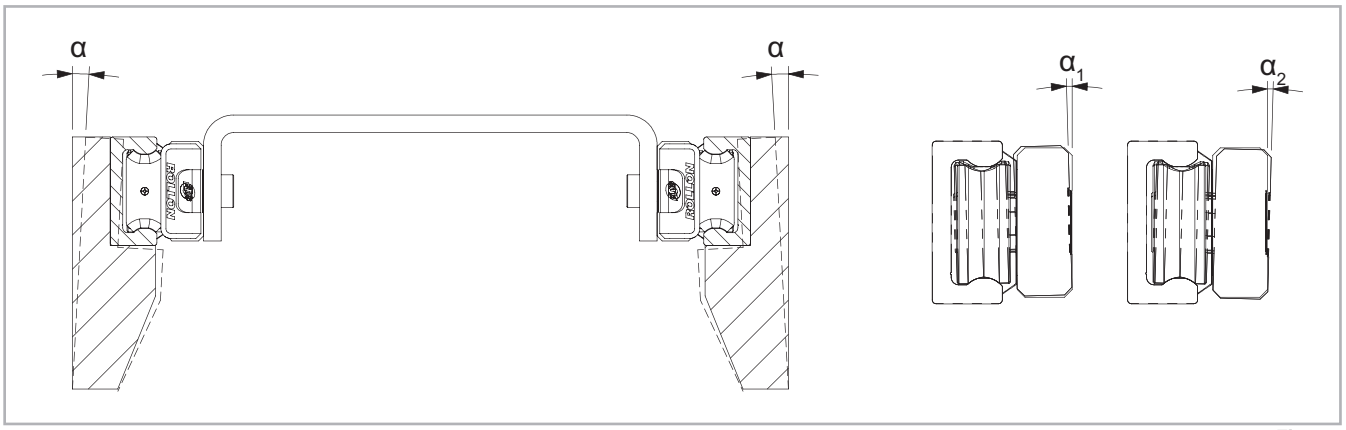

Fig. 47

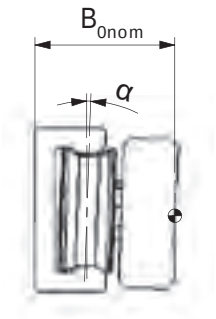

Fig. 48

Maximum offset

It must be noted that the RP- or RU-slider in one rail will turn during the movement and rotation of the RA-slider in the other to allow an axial offset. During the combined effect of these movements, you must not exceed the maximum values (see tab. 19). B_{0nom} is a recommended nominal starting value for the position of a RP- or RU-slider when part of a tolerance compensation system.

Slider type	B_{0nom} [mm]	Angle α [°]
RPG18	16.5	1°
RP28G **RDP28G**	24	1.7°
RP43G **RDP43G**	37	2.6°
RUG18	16.5	1°
RU28G **RDU28G**	24	1.7°
RU43G **RDU43G**	37	2.6°

Tab. 19

If a RA-slider is used in combination with a RP- or RU-slider with guaranteed problem-free running and without extreme slider load, a pronounced height difference between the two rails can also be compensated. The following illustration shows the maximum height offset b of the mounting surfaces in relation to the distance a of the rails (see fig. 49).

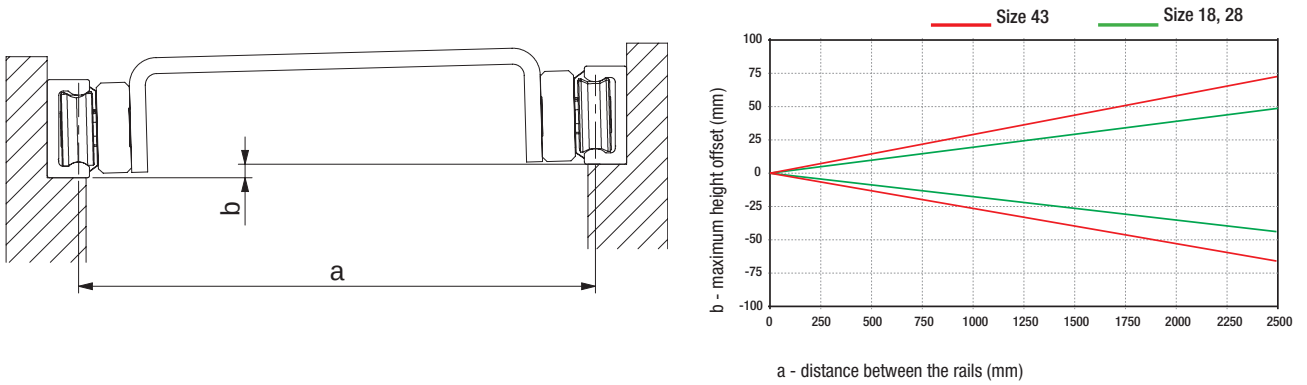

Fig. 49

Even the A+P/U-system can be used in different arrangements. If the same example as with the V+P/U-system is observed (see pg. CR-25, fig. 45), this solution, in addition to the prevention of vibrations and moments, also enables the compensation of larger deviations in parallelism in the vertical direction, without negative consequences to the guide. This is particularly important for longer strokes as it is more difficult to obtain a correct vertical parallelism.



Fig. 50

Preload

Preload classes

The factory installed systems, consisting of rails and sliders, are available in two preload classes:

Standard preload K1 means a rail-slider combination with minimum preload which means the rollers are adjusted free of clearance for optimal running properties.

Usually preload K2 is used for rail-slider systems for increasing the rigidity. When using a system with K2 preload a reduction of the loading capacities and service life must be taken into consideration (see tab. 20).

Preload class	Reduction y
K1	-
K2	0.1

Tab. 20

This coefficient y is used in the calculation formula for checking the static load and lifetime (see pg. CR-95, fig. 172 and pg. CR 99, fig. 189).

The interference is the difference between the contact lines of the rollers and the raceways of the rail.

Preload class	Interference* [mm]	Rail size
K1	0.01	all
K2	0.03	18
	0.04	28
	0.06	43

* Measured on the largest interior dimension between the raceways

Tab. 21

Drive force

Frictional resistance

The drive force required for moving the slider is determined by the combined resistance of the rollers, wipers and seals.

The ground raceways and rollers have a minimal coefficient of friction, which remains almost the same in both the static and dynamic state. The wiper and longitudinal seals are designed for an optimum protection of the system, without a significant negative influence on the quality of motion. The overall friction of the Compact Rail also depends on external factors such as lubrication, preload and additional forces. Table 22 below contains the coefficients of friction for each slider type.

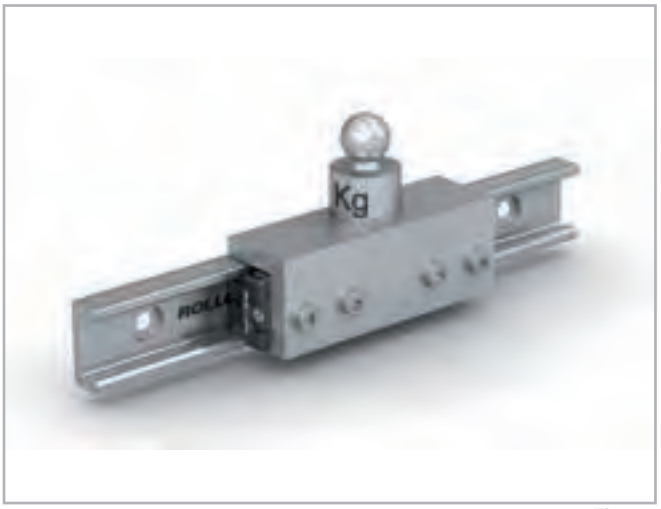

Fig. 51

Size	μ Roller friction	μ_w Wiper friction	μ_s Friction of longitudinal seals
18	0.003	$\frac{\ln (m \cdot 1000)^*}{0.98 \cdot m \cdot 1000}$	0.0015
28	0.003	$\frac{\ln (m \cdot 1000)^*}{0.06 \cdot m \cdot 1000}$	$\frac{\ln (m \cdot 1000)^*}{0.15 \cdot m \cdot 1000}$
43	0.005		

* Kilograms must be used for load m

Tab. 22

The values given in Table 22 apply to external loads, which, with sliders with three rollers, are at least 10 % of the maximum load rating. For calculating the driving force for lower loads, please contact Rollon technical support.

Calculation of drive force

The minimum required drive force for the slider is determined with the coefficients of friction (see tab. 22) and the following formula (see fig. 52):

$$F = (\mu + \mu_w + \mu_s) \cdot m \cdot g$$

m = mass (kg)
g = 9.81 m/s²

Fig. 52

Example calculation:

If a R...43G slider is used with a radial load of 100 kg, the result is μ = 0.005; from the formula the following is calculated:

$$\mu_s = \frac{\ln (100000)}{0.15 \cdot 100000} = 0.00076$$

$$\mu_w = \frac{\ln (100000)}{0.06 \cdot 100000} = 0.0019$$

Fig. 53

This is the minimum drive force for this example:

$$F = (0.005 + 0.0019 + 0.00076) \cdot 100 \cdot 9.81 = 7.51 \text{ N}$$

Fig. 54

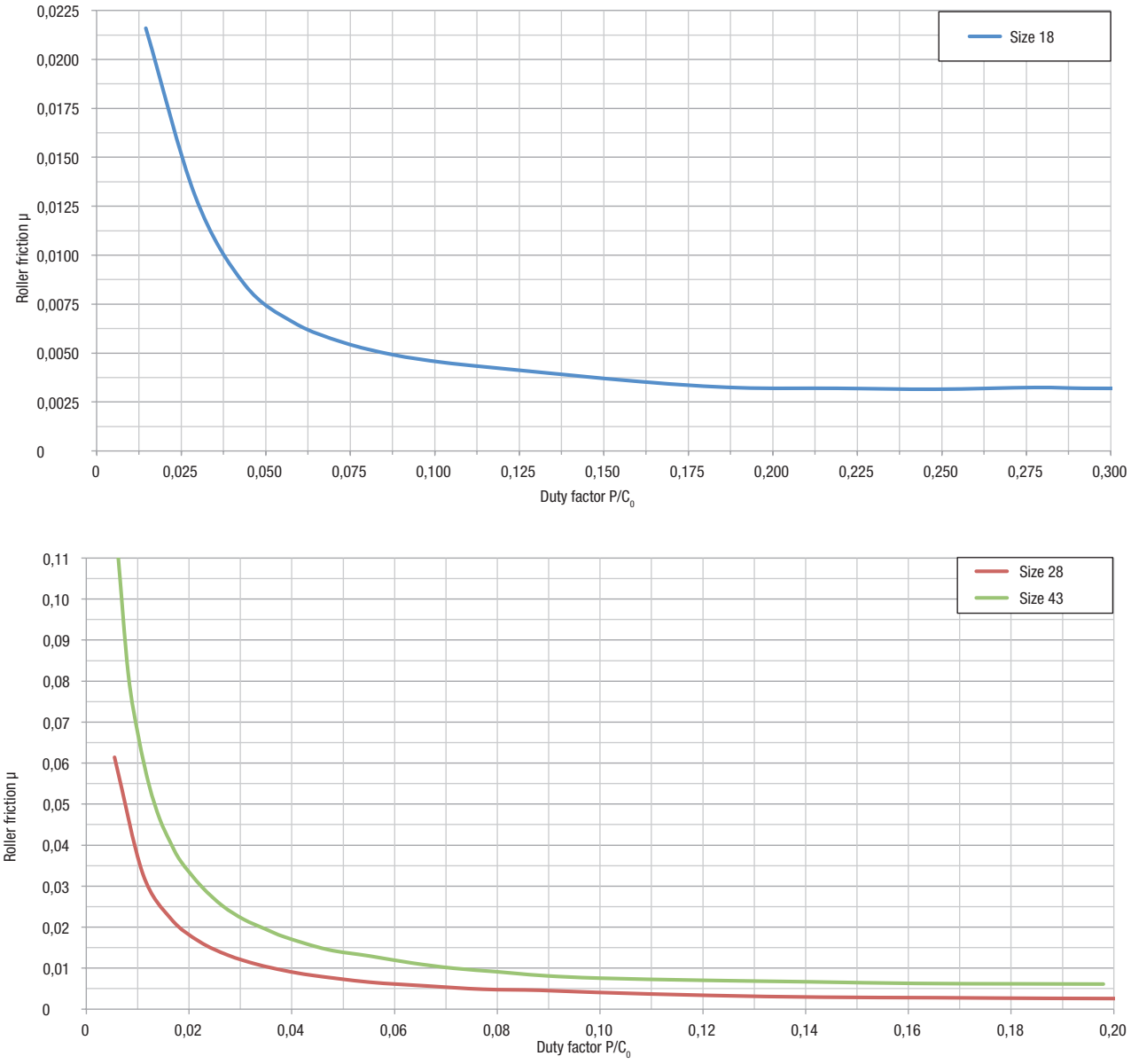
Size 18
Roller friction µ
0,0225
0,0200
0,0175
0,0150
0,0125
0,0100
0,0075
0,0050
0,0025
0
0
0,025
0,050
0,075
0,100
0,125
0,150
0,175
0,200
0,225
0,250
0,275
0,300
Duty factor P/C0
Size 28
Size 43
Roller friction µ
0,11
0,10
0,09
0,08
0,07
0,06
0,05
0,04
0,03
0,02
0,01
0
0
0,02
0,04
0,06
0,08
0,10
0,12
0,14
0,16
0,18
0,20
Duty factor P/C0

Fig. 55

Lubrication

Roller pin lubrication

The bearings inside the rollers are lubricated for life. To reach the calculated service life (see pg. CR-100), a film of lubricant should always be present between the raceway and roller, this also serves to protect against corrosion of the ground raceways.

Lubrication of the raceways

Proper lubrication during normal conditions:

- reduces friction
- reduces wear
- reduces the load of the contact surfaces through elastic deformations
- reduces running noise

Slider lubrication

The sliders are equipped with wiper heads that include lubricated felts which slowly release oil on the raceways for a long time. The wiper heads can be recharged from the front through a dedicated access hole by means of an oiling syringe.

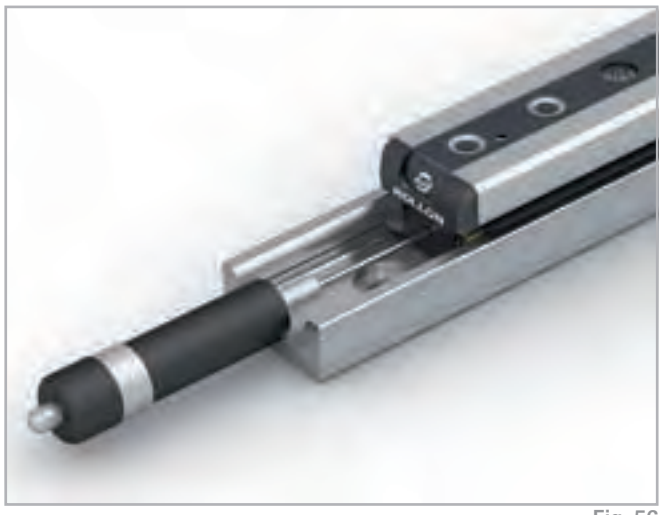

Fig. 56

Lubricant	Thickening agent	Temperature range [°C]	Kinematic viscosity 40°C [mm²/s]
Mineral oil	Lithium soap	-20... to +120	approx 110

Tab. 23

The durability of the lubrication delivered by the wiper heads depends on the conditions of use. In the normal clean indoor applications, it is suggested to refill the oil every 0.5 million of cycles, 1000 km or 1 year of use whichever comes first. In different conditions, it could be necessary to refill more often, depending on the level of environment criticity. In case of severe dust and dirt conditions, it is suggested to change the entire wiper head with a new one.

When refilling the oil or the substituting the wiper heads, it is recommended to clean the raceways of the guide.

Corrosion protection

All rails and slider bodies have a standard corrosion protection system by means of electrolytic-zinc plating according to ISO 2081, except for size 18 rails where the standard treatment is Rollon-Nox hardening. If increased corrosion protection is required, application-specific surface treatments are available upon request for rails and slider bodies sizes 28 and 43, e.g. approved nickel plated for use in the food industry. In this case, the chosen treatment must be specificed in the order for both rails and sliders using the appropriate code shown in the table below. For more information contact Rollon technical support.

Treatment	Characteristics
Rollon-Nox	Patented high depth nitride hardening and black oxidation treatment that provides good durability under high loads or frequencies and good corrosion resistance. It is standard for rails size 18 and it's not available for other sizes.
Zinc Plating ISO 2081	Standard treatment for rails sizes 28-43 and all slider bodies, it is ideal for indoor applications. When applied to the rail, it is removed from the raceways by the subsequent grinding process. Zinc-plated sliders are supplied with steel rollers.
Rollon Aloy (Y)	Electrolytic plating with high resistance passivation, ideal for outdoor applications. When applied to the rail, it is removed from the raceways by the subsequent grinding process. Sliders ordered with Rollon Aloy treatment are supplied with stainless steel rollers to further increase the corrosion resistance.
Rollon E-coating (K)	As zinc-plated version with additional electro painting that provides a fine black finishing to the entire rail. When applied to the rail, the slider can partially remove the coating from the raceways on the running contact point after a period of use. Sliders ordered with Rollon E-Coating are supplied with stainless steel rollers to further increase the corrosion resistance.
Nickel Plating (N)	Provides high resistance to chemical corrosion and is ideal for applications in medical or food related environments. When applied to the rail, raceways are coated too. Sliders ordered with Nickel Plating treatment are supplied with stainless steel rollers to further increase the corrosion resistance.

Tab. 24

Speed and acceleration

The Compact Rail product family is suitable for high operating speeds and accelerations.

Size	Speed [m/s]	Acceleration [m/s²]
18	3	10
28	5	15
43	7	15

Tab. 25

Operating temperatures

The temperature range for continuous operation is: -20 °C / +120 °C with occasional peaks up to +150 °C.

Installation instructions

Fixing holes

V-holes with 90° bevels

The selection of rails with 90° countersunk holes is based on the precise alignment of the threaded holes for installation. Here the complex alignment of the rail to an external reference is omitted, since the rail aligns during installation by the self-centering of the countersunk screws on the existing hole pattern.

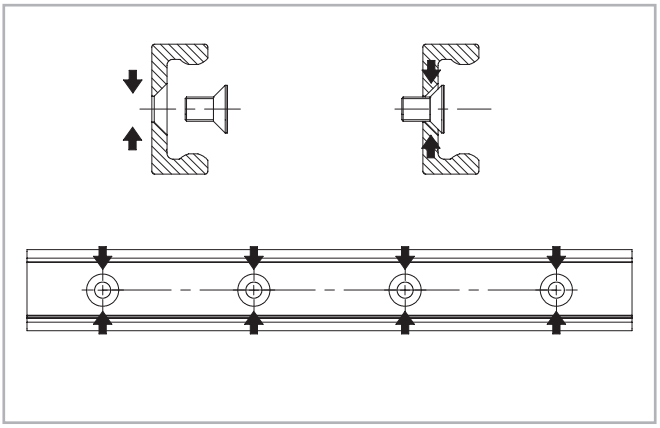

Fig. 57

C-holes with cylindrical counterbore

When a rail with counterbored holes is delivered, the Torx® screws are provided in the right quantity. The cylindrical screw has, as shown, some play in the countersunk fixing hole, so that an optimum alignment of the rail can be achieved during installation (see fig. 58).

The area T is the diameter of the possible offset, in which the screw center point can move during the precise alignment.

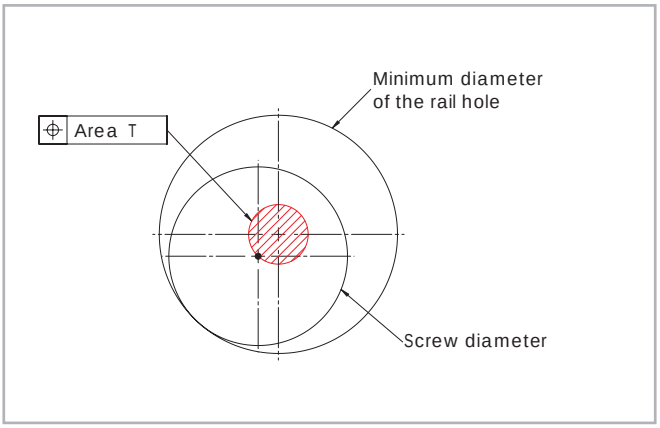

Fig. 58

Rail type	Area T [mm]
TMGC18	∅ 1.0
TGC28	∅ 1.0
TGC43	∅ 2.0

Tab. 26

Chamfers

Chamfers must be realized for both C-holes and V-holes rails. The minimum chamfers on the fixing threads are listed on the table below.

Size	Chamfer C-holes [mm]	Chamfer V-holes [mm]
18	0.5 x 45°	0.5 x 45°
28	0.6 x 45°	1 x 45°
43	1 x 45°	1 x 45°

Tab. 27

Example for fixing with Torx® screws (custom design)

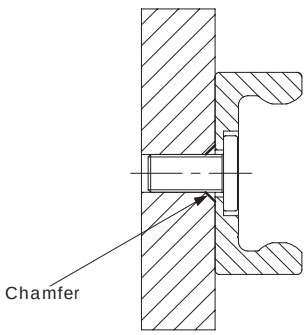

Example for fixing with countersunk screws

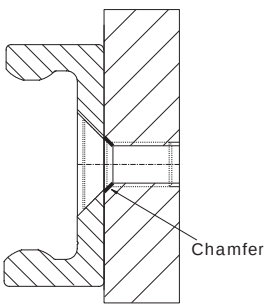

Fig. 59

Adjusting the sliders

Normally the linear guides are delivered as a system consisting of rail and adjusted sliders. If rail and slider are delivered separately or if the slider is installed in another raceway, the preload must be set again. For size 28 and 43 the preload setting can be done according to one of the following procedures. For size 18, the only procedure available is the one with Allen key.

With flat key

(1) Verify that the raceways are clean and take the wipers off to obtain a more sensitive feeling for correct preload setting.
(2) Insert the slider in the rail. Slightly loosen the fixing screws of the eccentric roller pins (unmarked) to be adjusted.
(3) Position the slider on one end of the rail.
(4) Insert the included special flat wrench from the side between the rail and the slider and slip it onto the hexagon of the eccentric roller to be adjusted.
(5) By turning the flat key clockwise, the roller to be adjusted is pressed against the upper track and the slider is then without play. Avoid a preload that is too high. It generates increased wear and reduces the service life.
(6) While holding the correct position of the roller with the adjustment key, the fixing screw can be carefully tightened. See table 28 for the exact tightening torque.
(7) Move the slider in the rail and check the preload over the entire length of the rail. It should move easily, and the slider should not have play at any location of the rail.
(8) For sliders with more than 3 rollers, repeat this process with each eccentric roller. Make sure that all rollers have even contact to the tracks.
(9) Now tighten the fixing screws with the specified tightening torque from the table while the flat key holds the angle adjustment of the pin. A special thread in the roller pin secures the set position.

With Allen Keys

(1) Verify that the raceways are clean and take the wipers off to obtain a more sensitive feeling for correct preload setting.
(2) Tighten the top-screw, but not too much, to allow a firm turning of the eccentric bottom-pivot, maintaining the roller tight to the slider body.
(3) Turn the eccentric pivot so that the roller is roughly aligned with the concentric rollers or slightly in the opposite direction of the concentric rollers.
(4) Lock the rail on a stable support, so hands are free. Insert the slider into the rail. Insert the Allen key into the pivot, through the rail fixing hole. Turn the Allen key slightly, so that the eccentric roller is coming in light contact with the raceways, opposite the fixed rollers. During the rotation, accompany the top-screw while rotating in the same direction with second Allen key, in order to avoid any loosening or change in preload setting.
(5) Move the slider along the whole rail length to find the part or point, where the slider moves with less friction. If any oscillation/ play is noted, the eccentric roller must be re-adjusted. Perfect preload setting is achieved, when the slider moves very smoothly and with no play at this point.
(6) Holding firm against the Allen key, engaged in eccentric pivot with one hand, while with another Allen key rotate and tighten the top-screw fastening the roller. Do not lock or unlock the eccentric roller by turning the pivot, always only act on the top screw to block or to ease the roller.
(7) It's possible to verify the amount of preload by slowly inserting the slider at the end of the rail. The inserting force is proportional to the preload. In general, a good setting corresponds to the following min/max forces shown in table 28.
(8) Then make final roller/screw tightening using a torque wrench, to assure right tightening torque according to the values in table 29, while maintaining the Allen key in pivot, to prevent any change of preload setting.



Fig. 60



Fig. 61

Slider type	Tightening torque [Nm]
R...G18	3
R...28G	9
R...43G	22

Tab. 28

Slider type	Inserting force	
	F_{min} [N]	F_{max} [N]
R...G18	0.5	2
R...28G	1	5
R...43G	2	10

Tab. 29

Use of radial ball bearing rollers

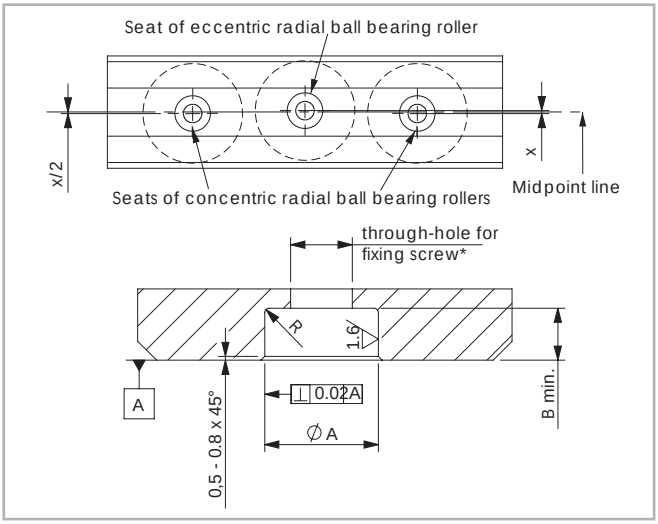

Fig. 62

Slider size	X [mm]	Ø A [mm]	B min. [mm]	Radius R [mm]
18	0.30	-	-	-
28	0.44	8 + 0.05/+0.02	2	0.5
43	0.90	11 + 0.05/+0.02	3	0.5

Tab. 30

If purchasing "Radial ball bearing rollers" to install on your own structure (see p. CR-18) we advise:

- Using a maximum of 2 concentric radial ball bearing rollers
- Offset the seats of the concentric radial ball bearing rollers with respect to those of the eccentric radial ball bearing rollers according to the table 30.

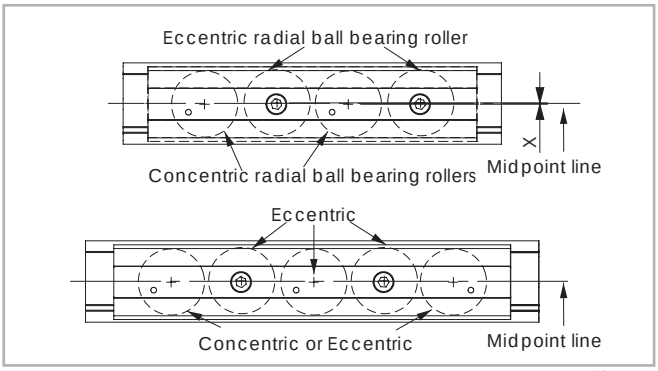

Fig. 63

Installing the single rail

The rails can be installed in two positions relative to the external force. For axial loading of the slider (fig. 64 pos. 2), the load capacity is reduced because of the decline in contact area caused by the change in position. Therefore, the rails should be installed in such a way that the load on the rollers acts in the radial direction (fig. 64, pos. 1). The number of fixing holes in the rail in combination with screws of property class 10.9 is dimensioned in accordance with the load capacity values. For critical applications with vibrations or higher demand for rigidity, a support of the rail (fig. 64, pos. 3) is advantageous.

This reduces deformation of the sides and the load on the screws. The installation of a rail with countersunk holes requires an external reference for alignment. This reference can also be used simultaneously as rail support if required. All information in this section on alignment of the rails, refers to rails with counterbored holes. Rails with countersunk holes self-align using the specified fixing hole pattern (see pg. CR-34, fig. 57).

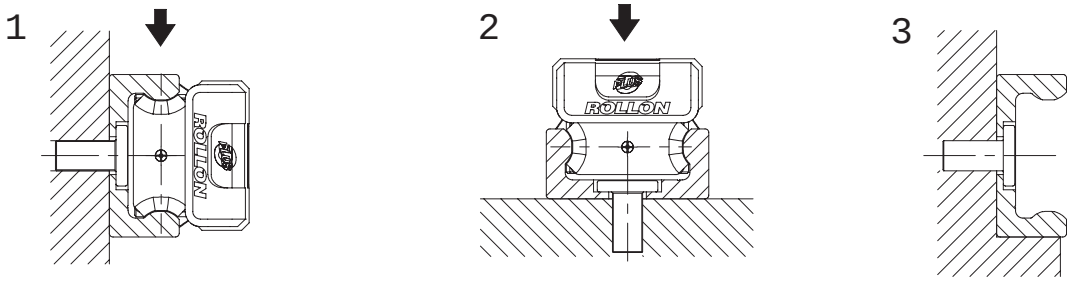

Fig. 64

Rail installation with reference surface as support

(1) Remove unevenness, burrs and dirt from the support surface.

(2) Press the rail against the support surface and insert all screws without tightening them.

(3) Start tightening the fixing screws to the specified torque on one end of the rail while continuing to hold pressure on the rail against the support surface.

Screw type	Torx® tightening torque [Nm]	Countersunk tightening torque [Nm]
M4 (TMG...18)	3	3
M5 (TG...28)	9	6
M8 (TG...43)	22	25

Tab. 31

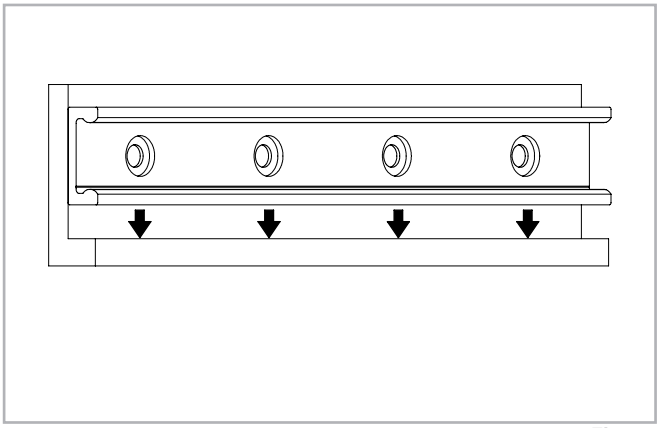

Fig. 65

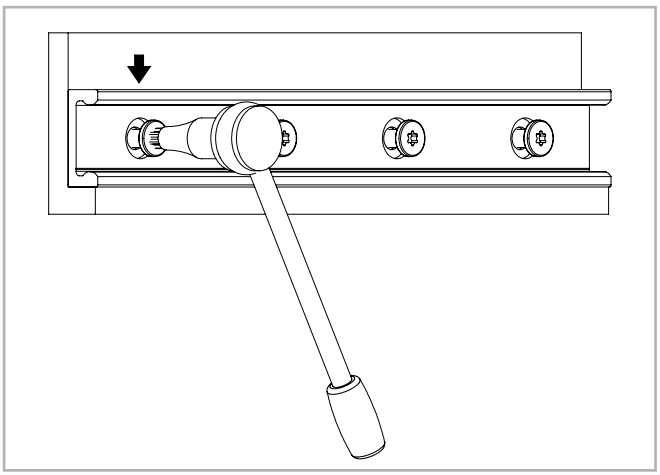

Fig. 66

Rail installation without support

(1) Carefully lay the guide rail with installed slider on the mounting surface and slightly tighten the fixing screws so that the guide rail lightly touches the mounting surface.

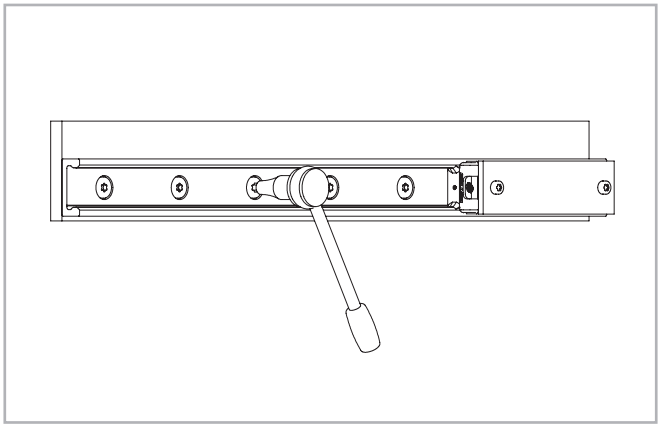

Fig. 67

(2) Install a dial indicator so that the offset of the rail to a reference line can be measured. Now position the slider in the center of the rail and set the dial indicator to zero. Move the slider back and forth between each two hole spacings and carefully align the rail. Fasten the three center screws of this area now with the specified tightening torque, see fig. 68.
(3) Now position the slider on one end of the rail and carefully align the rail to zero on the dial indicator.

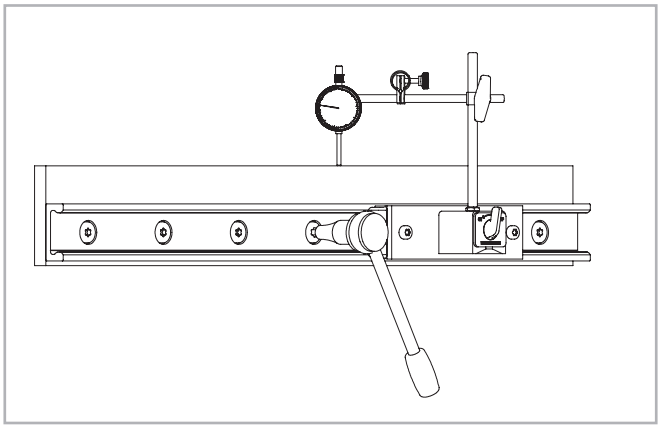

Fig. 68

(4) Begin to tighten the screws as specified while moving the slider together with the dial indicator. Make sure that it does not show any significant deflection. Repeat this procedure from the other end of the rail.

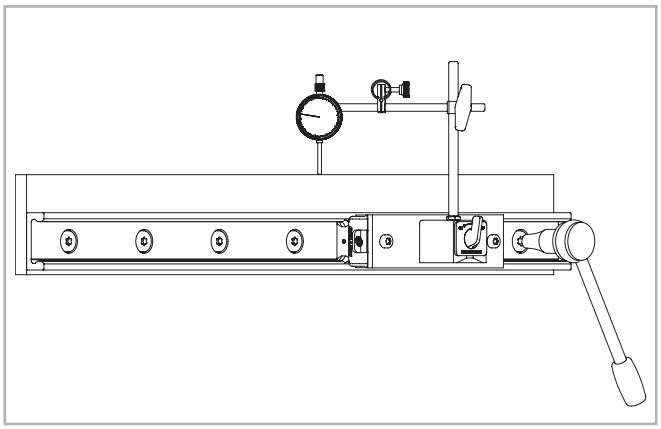

Fig. 69

Parallel installation of two rails

When two rails with guiding sliders RV, a V+P system or a V+U system are installed the height difference of the two rails must not exceed a certain value (obtainable from the table below) in order to ensure proper guiding. These maximum values result from the maximum allowable twisting angle of the rollers in the raceways (see tab. 32). These values account for a load capacity reduction of 30% on the rail and must absolutely be maintained in every case.

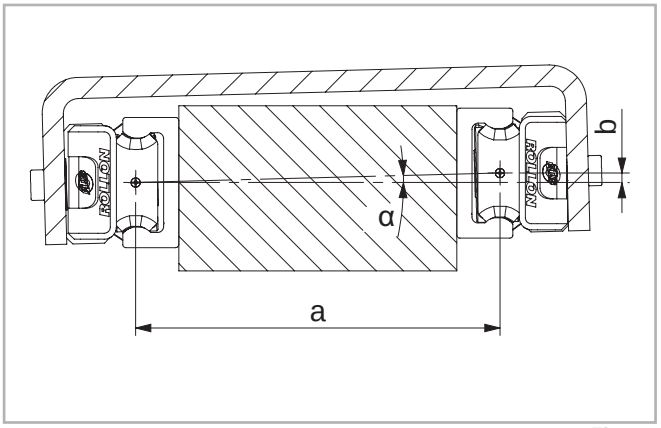

Fig. 70

Size	α
18	1 mrad (0.057°)
28	2.5 mrad (0.143°)
43	3 mrad (0.171°)

Tab. 32

When using two rails, the maximum parallelism deviation must not be exceeded (see tab. 33). Otherwise stresses can occur, which can result in a reduction in load capacity and service life.

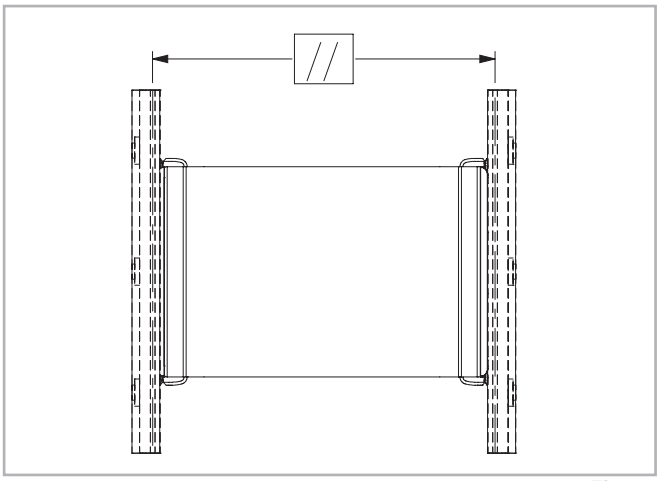

Fig. 71

Rail size	K1	K2
18	0.03	0.02
28	0.04	0.03
43	0.05	0.04

Tab. 33

Note: For parallelism problems, it is recommended to use a V+P/U or A+P/U system, since these combinations compensate for inaccuracies (see pg. CR-24, or CR-26).

Parallel installation of two rails

(1) Clean chips and dirt from the prepared mounting surfaces and fasten the first rail as described in the section on installation of a single rail.
(2) Fasten the second rail on the ends and the center. Tighten the screws in Position A and measure the distance between the raceways of the two rails.

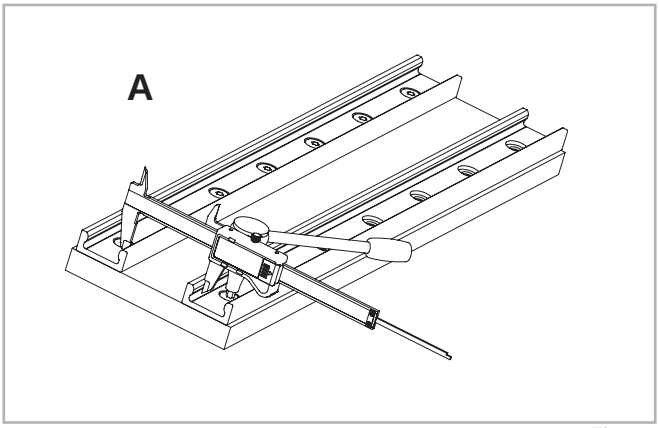

Fig. 72

(3) Fasten the rail in Position B so that the distance between the raceways does not exceed the measured values in Position A while maintaining the tolerances (see pg. CR-30, tab. 22) for parallel rail installation.

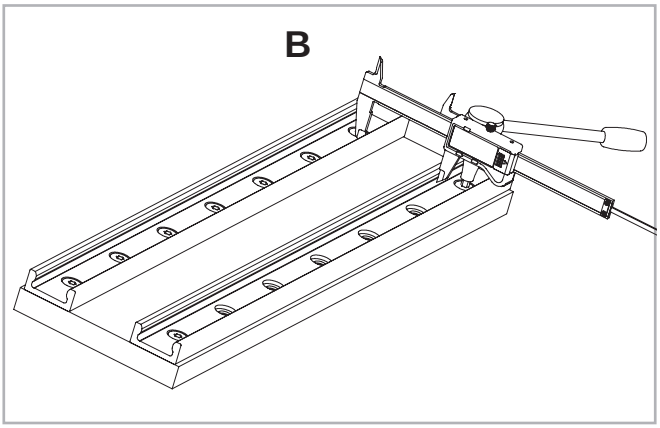

Fig. 73

(4) Fasten the screw in Position C so that the distance of the raceways is as close to an average between the two values from A and B as possible.
(5) Fasten all other screws and check the specified tightening torque of all fixing screws (see pg. CR-38, tab. 31).

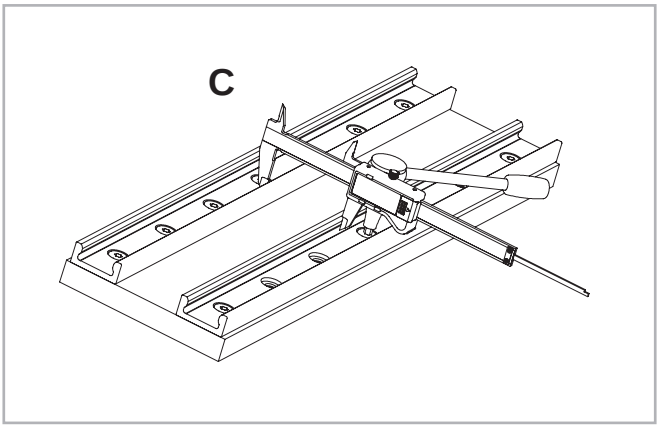

Fig. 74

Installation of the self-aligning systems

When using a two-track parallel linear guide we recommend the use of a misalignment compensation system: the combination of a V+P/U sliders to compensate for deviations in parallelism or A+P/U sliders to compensate for deviations in parallelism in two planes.

Installation steps

(1) For a compensating system, the rail with the guiding slider RV is always installed first. This is then used as a reference for the compensating bearing rail.
Then proceed as described in the section on installation of a single rail (see pg. CR-37).
(2) Install the other bearing rail and only tighten the fixing screws slightly.
(3) Insert the sliders in the rails and install the element to be moved, without tightening its screws.
(4) Insert the element in the center of the rails and tighten it, use screws class 10.9.

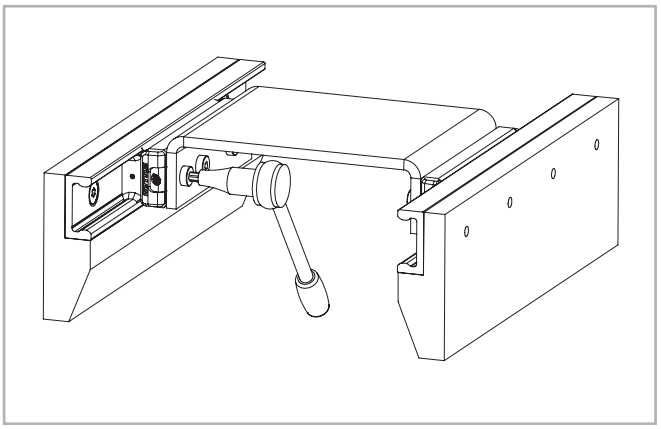

Fig. 75

(5) Tighten the center rail fixing screws to the specified torque (see pg.CR-38, tab. 31).

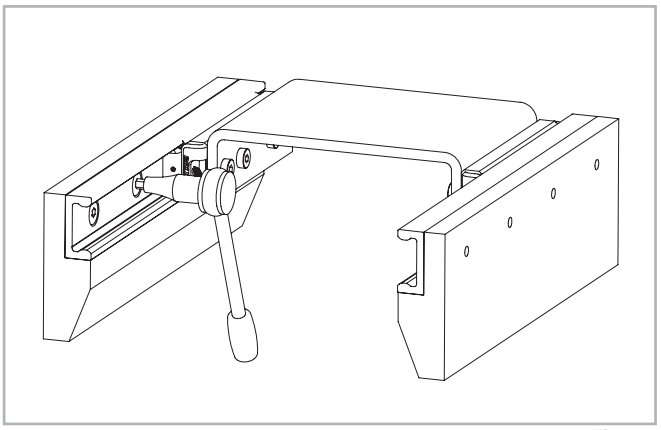

Fig. 76

(6) Move the element to one end of the rail and start tightening the rest of the screws in the direction away from the slider.

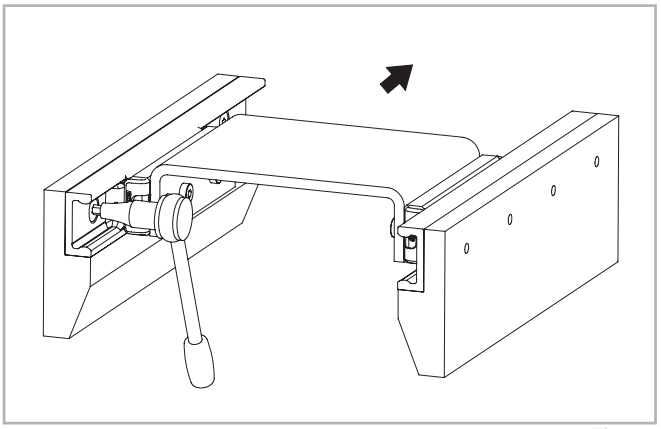

Fig. 77

Joined Rails

If long guide rails are required, two or more rails can be joined to the desired length. When putting guide rails together, be sure that the register marks shown in fig. 78 are positioned correctly.

For applications with parallel joined guide rails we suggest them to fe fabricated asymmetric.

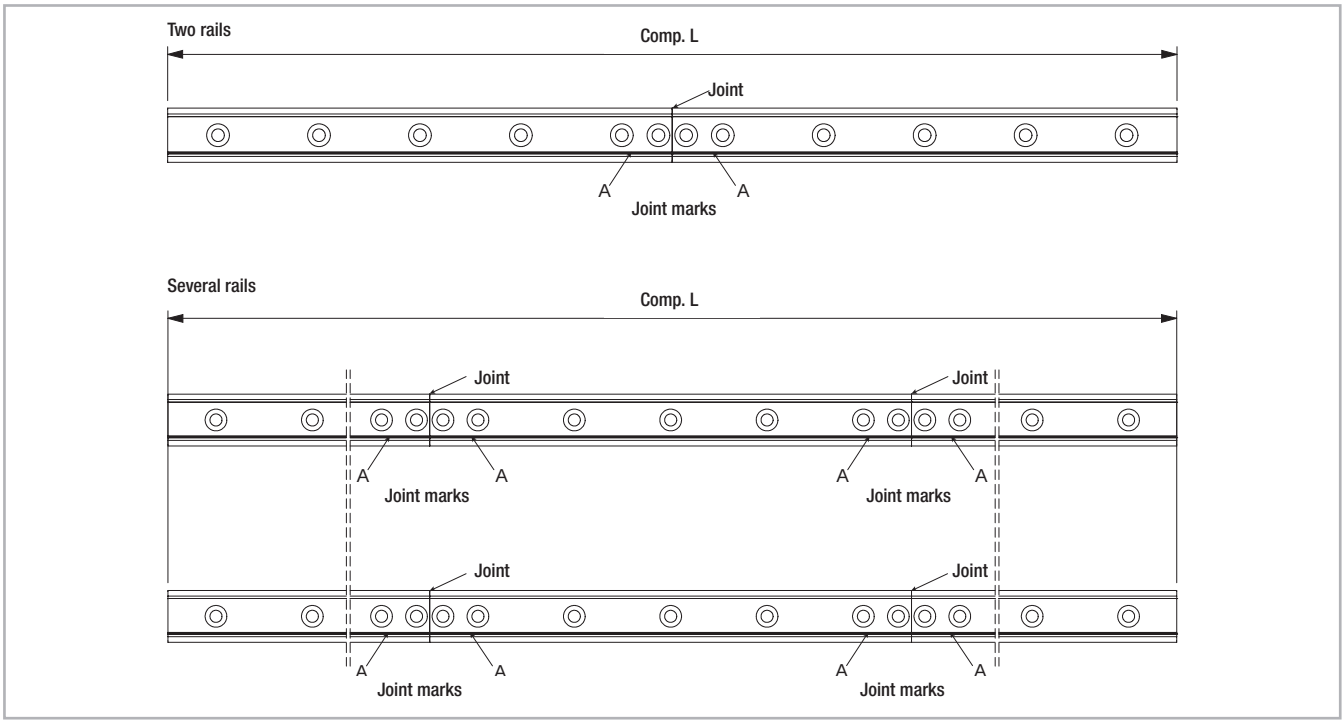

Fig. 78

General information

The maximum available rail length in one piece is indicated in table 5 on page CR-11. Longer lengths are achieved by joining two or more rails (joined rails).

Rollon then machines the rail ends at a right angle to the impact surfaces and marks them. Additional fixing screws are included with the delivery, which ensure a problem-free transition of the slider over the joints, if the following installation procedures are followed. Two additional threaded holes (see fig. 79) are required in the load-bearing structure. The included end fixing screws correspond to the installation screws for the rails for cylindrical counterbores (see pg. CR-34).

The alignment fixture for aligning the rail joint can be ordered using the designation given in the table (see pg. CR-19, tab. 11).

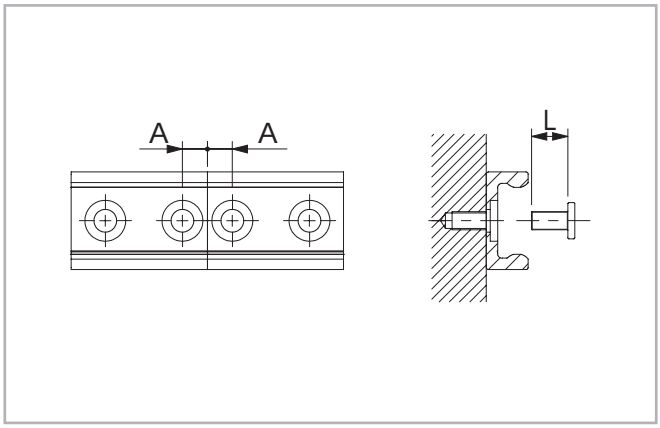

Fig. 79

Rail type	A [mm]	Threaded hole (load-bearing structure)	Screw type	L [mm]	Alignment fixture
TMGC18 - TMGV18	7	M4	see pg. CR-19	8	ATMG18
TGC28 - TGV28	8	M5		10	ATG28
TGC43 - TGV43	11	M8		16	ATG43

Tab. 34

Installation of joined rails

After the fixing holes for the rails are made in the load-bearing structure, the joined rails can be installed according to the following procedure:
(1) Fix the individual rails on the mounting surface by tightening all screws except for each last one on the rail joint.
(2) Install the end fixing screws without tightening them (see fig. 80).

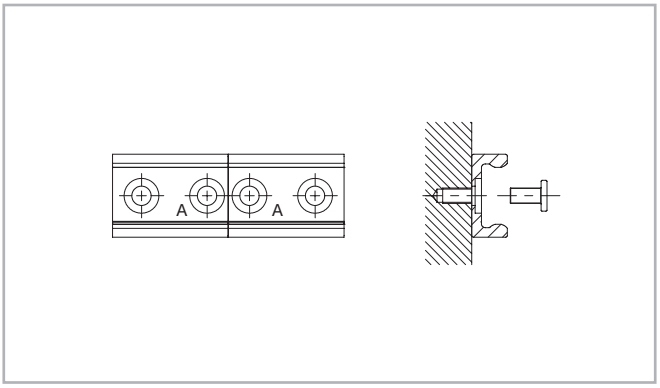

Fig. 80

(3) Place the alignment fixture on the rail joint and tighten both set screws uniformly, until the raceways are aligned (see fig. 81).
(4) After the previous step (3) it must be checked if both rail backs lie evenly on the mounting surface. If a gap has formed there, this must be shimmed.

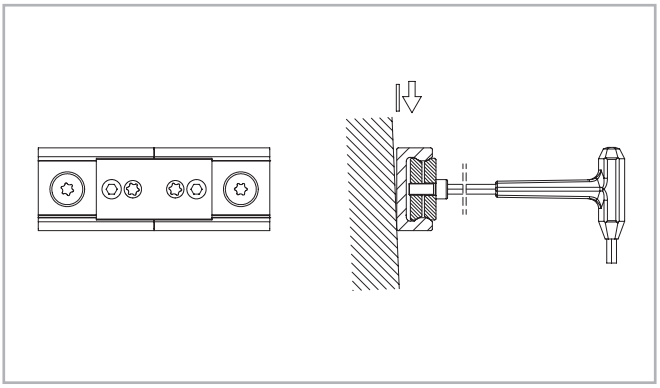

Fig. 81

(5) The bottom of the rails should be supported in the area of the transition. Here a possible existing gap must be looked for, which must be closed for correct support of the rail ends by shims.

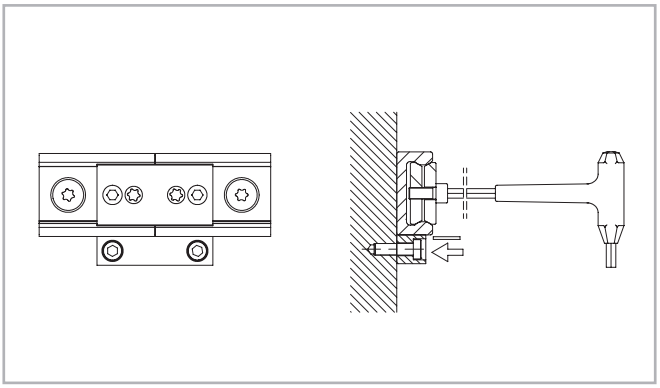

Fig. 82

(6) Insert the key through the holes in the alignment fixture and tighten the screws on the rail ends.
(7) For rails with 90° countersunk holes, tighten the remaining screws starting from the rail joint in the direction of the rail center. For rails with cylindrical counter-sunk holes, first adjust the rail to an external reference, then proceed as described above.
(8) Remove the alignment fixture from the rail.

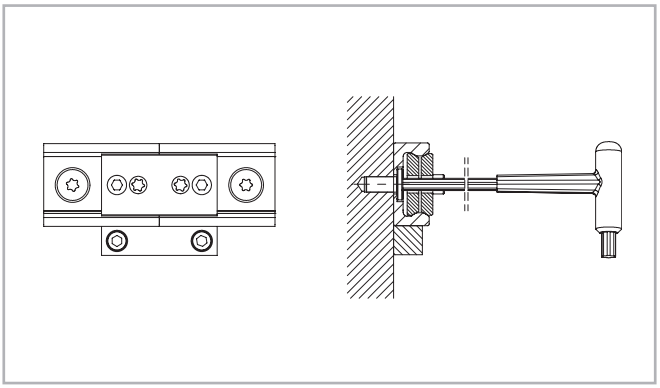

Fig. 83

Ordering key

Note on ordering: rails length codes are always 5 digits, sliders length codes are always 3 digits. Use zeroes as a prefix when lengths are shorter.

Rail / slider system

TGV	-03600	/2/	RV	43G	-4	A	-N
							Surface protection *(if different from Standard) see pg. CR-33, tab. 24*
						Configuration depending on type of slider *see pg. CR-12 and CR-14*	
					Number of rollers *see pg. CR-8, tab. 1*		
				Size *see from pg. CR-11*			
			Slider type *see pg. CR-12*				
		Number of sliders in one rail					
	Rail length in mm *see pg. CR-11, tab. 5*						
Rail type *see pg. CR-11, tab. 4*							

Ordering example: TGV-03600/2/RV43G-4A-N

Rail

TGV	-43	-03600	-N
			Surface protection *(if different from Standard ISO 2081) see pg. CR-33, tab. 24*
		Rail length in mm *see pg. CR-11, tab. 5*	
	Size *see pg. CR-11*		
Rail type *see pg. CR-11, tab. 5*			

Ordering examples: TGV-43-03600-NIC (single rail); TGV-43-05680-N (joined rails)

Rail composition: 1x880+2x2400 (only for joint processed rails)

Hole pattern: 40-10x80-40//40-29x80-40//40-29x80-40 (please always specify the hole pattern separately)

Slider

RV	43G	-4	A	-N
				Surface protection (if different from Standard) see pg. CR-33, tab. 24
			Configuration depending on type of slider *see pgs. CR-12 and CR-14*	
		Number of rollers *see pg. CR-8*		
	Size *see pg. CR-11*			
Slider type *see pg. CR-12*				

Ordering example: RV43G-4A-N

Wipers

ZK-WR	43G
	Size
Wiper type *see pg. CR-19*	

Ordering example: ZK-WR43G

Note on ordering: every kit contains a pair of wipers. Two wipers per slider are always required.

Product explanation

Self-aligning linear guides with bearings and C-profile featuring newly designed robust steel slider



Fig. 84

Compact Rail is the product family of guide rails consisting of roller sliders with radial bearings which slide on the internal, induction hardened and ground raceways of a C-profile made from cold-drawn roller bearing carbon steel.

Compact Rail consists of three product series: the fixed bearing rail, the compensating bearing rail and the floating bearing rail. They can be combined to create self-aligning systems to compensate misalignment errors on two planes: axially up to 3.9 mm and radially up to 2°. All products are available in zinc plating, with other treatments for higher corrosion resistance as an option. There are five different sizes of guide rails and many different versions and lengths of the slide bearings, depending on the size and load requirement.

The most important characteristics:

- Compact size
- Corrosion resistant surface
- Not sensitive to dirt due to internal raceways and large rollers
- Hardened and ground raceways
- Self-aligning in two planes
- Quieter than recirculating ball systems
- High operating speeds
- Wide temperature range
- Easy adjustment of slider in the guide rail
- Different anticorrosion treatments available for rails and slider bodies

Preferred areas of application:

- Cutting machines
- Medical equipment
- Packaging machines
- Photographic lighting equipment
- Construction and machine technology (doors, protective covers)
- Robots and manipulators
- Automation
- Handling
- Special vehicles

Fixed bearing rails (T-rails)

Fixed bearing rails are used as the main load bearing of radial and axial forces.



Fig. 85

Floating bearing rails (U-rails)

The floating bearing rails are used for load bearing of radial forces and, in combination with the fixed bearing T-rail or compensation K-rail, as a support bearing for occurring moment loads.



Fig. 86

Compensation bearing rails (K-rails)

The compensation bearing rails are used for the load bearing of radial and axial forces. Tolerance compensation in two planes can be implemented in combination with the U-rail.



Fig. 87

Self-aligning system: T+U

The combination of fixed bearing rail and floating bearing rail allows for deviations in parallelism.



Fig. 88

Self-aligning system: K+U

The combination of compensation rail and floating bearing rail allows for deviations in parallelism and height offset.



Fig. 89

NSW/NSA-slider

Robust zinc plated steel slider with roller bearings, self-centering heads with wipers, longitudinal seals to protect the internal components and a top sealing strip to prevent accidental tampering of the fixed rollers. The slider body is accurately finished with matte longitudinal edge chamfer and a shining ground flat surface. It is available for all sizes, configurable with up to six rollers depending on the load requirement.



Fig. 90

NSD/NSDA-slider

Constructed as the NSW/NSA-slider with mounting holes parallel to the direction of preferred loading. It is available for sizes 28 and 43, with three or five rollers, depending on load case and load direction set with the corresponding configuration.



Fig. 91

Rollers

Also available individually in all sizes. Available as eccentric or concentric rollers. Optionally available with splash-proof plastic seal (2RS) or with steel cover disc (2Z).



Fig. 92

Wipers

The slider heads are equipped with special slow release felt pads and are free to rotate with respect to the slider body, so that the felts are always in contact with the raceways to ensure a perfect lubrication. The felts can be grased through a dedicated oil refilling access on the front of the head, simply by means of a syringe oiler.



Fig. 93

Alignment fixture

The alignment fixture AT / AK is used during installation of joined rails in order to precisely align the rails with each other.



Fig. 94

Technical data

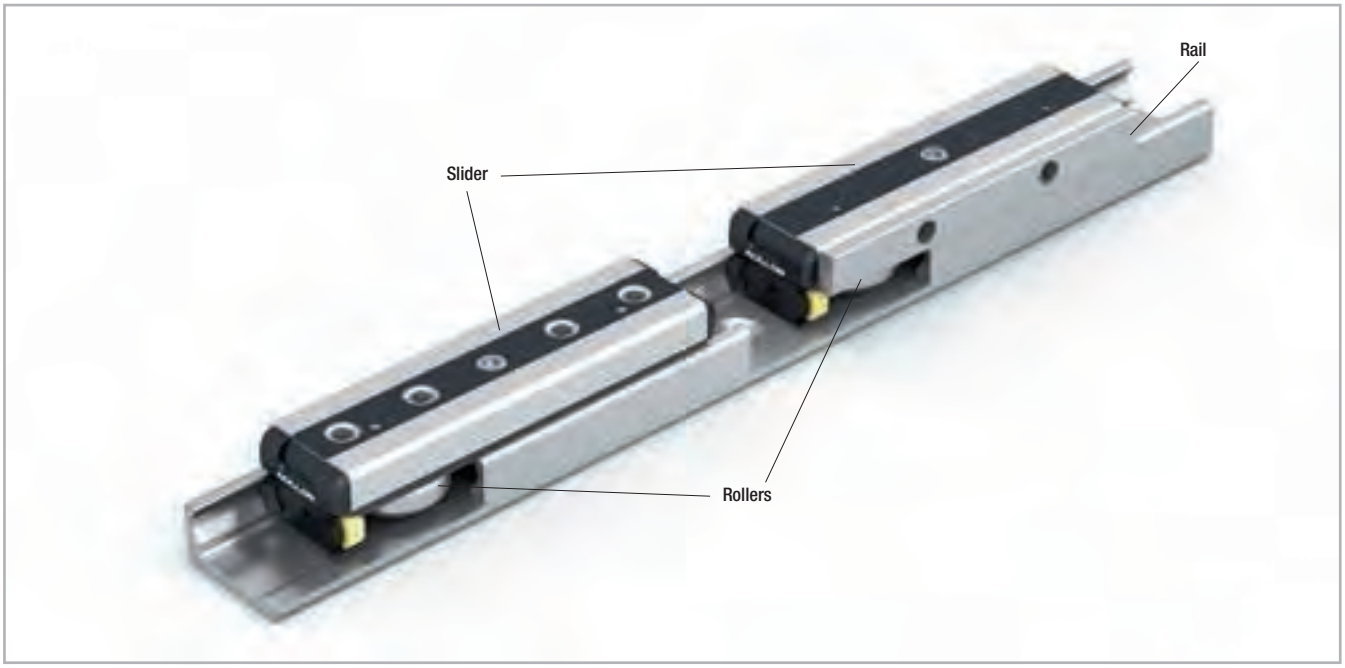

Fig. 95

Performance characteristics:

- Available sizes for T-rail, U-rail: 18, 28, 35, 43, 63
- Available sizes for K-rail: 43, 63
- Max. operating speed: 9 m/s (354 in/s) (depending on application)
- Max. acceleration: 20 m/s^2 (787 in/s^2) (depending on application)
- Max. radial load capacity: 15,000 N (per slider)
- Temperature range: -20 °C to +120 °C (-4 °F to +248 °F) briefly up to max. +150 °C (+302 °F)
- Available rail lengths from 160 mm to 3,600 mm (6.3 in to 142 in) in 80-mm increments (3.15 in), longer single rails up to max. 4,080 mm (160.6 in) on request
- Roller pins lubricated for life
- Roller seal/shield: standard 2Z (steel cover disk), 2RS (splash-proof)
- Rollers material: steel 100Cr6 (also available stainless steel AISI 440)
- Rail raceways are induction hardened and ground
- Rails and slider bodies are standard zinc-plated according to ISO 2081
- Rail material of T- and U-rails in sizes 18: cold-drawn roller bearing carbon steel C43 F
- Rail material of K-rails, as well as T- and U-rails in size 28 to 63: Cf53

Notes:

- The sliders are equipped with rollers that are in alternating contact with both sides of the raceway. Markings on the body around the roller pins indicate correct arrangement of the rollers to the external load
- With a simple adjustment of the eccentric rollers, the desired clearance or preload on the rail and slider can be set.
- Rails in joined design are available for longer transverse distances (see pg. CR-90)
- The K rails are not suitable for vertical installation
- Screws of property class 10.9 must be used
- Differences in screw sizes must be observed
- When mounting the rails, it is crucial to ensure that the mounting holes in the structure are properly chamfered. (see pg. CR-81, tab. 66)
- The general illustrations show NSW-sliders as an example
- Rollers are available also in stainless steel version (see pg. CR-64).

Configurations and behavior of the slider under yawing moment M_z

Individual slider under M_z moment load

When an overhanging load in an application with a single slider per rail causes an M_z moment in one direction, a 4 to 6 roller Compact Rail slider is available. These sliders are available in both configuration A and B in regards to the roller arrangement to counter the acting M_z moment load. The moment capacity of these sliders in the Mz-direction varies significantly through spacing L_1 and L_2 in accordance with the direction of rotation of M_z. Especially in the use of two parallel rails, for example with a T+U-system, it is extremely important to pay attention to the correct combination of the slider configuration A and B, in order to use the maximum load capacities of the slider.

The diagrams below illustrate this concept of the A and B configuration for sliders with 4 and 6 rollers. The maximum allowable M_z-moment is identical in both directions for all 3 and 5 roller sliders.

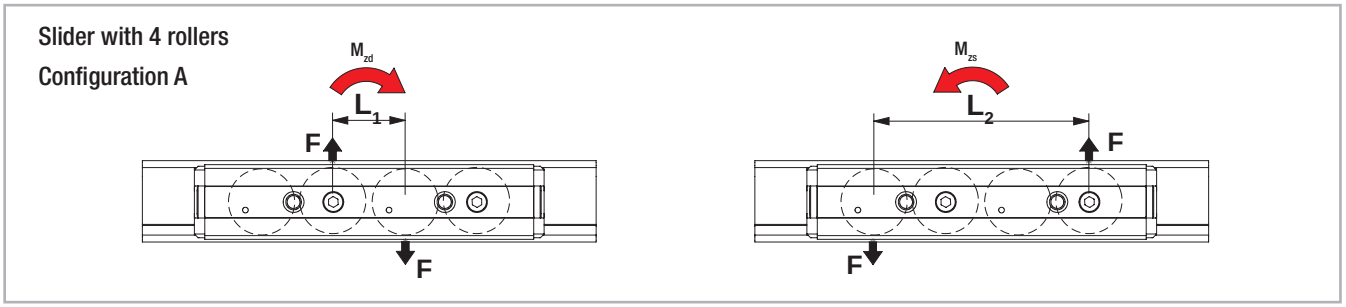

Fig. 96

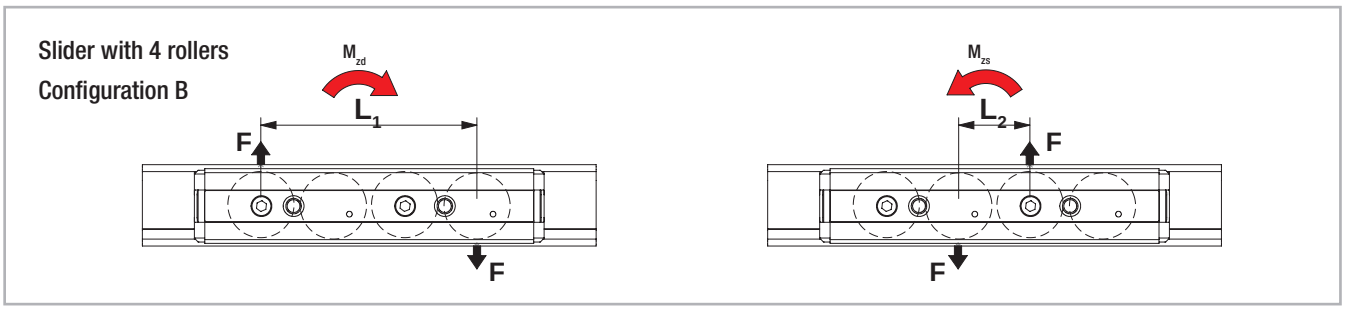

Fig. 97

Two sliders under M_z moment load

When an overhanging load acts on an application with two sliders per rail and causes an M_z-moment in one direction, different support reactions occur on the two sliders. For this reason, an optimal arrangement of slider configurations must be achieved to reach the maximum load capacities. In practice, when using NSW-sliders with 3 or 5 rollers, the two sliders must be installed rotated by 180° so that the slider is always loaded on the side with the highest number of rollers (with NSA sliders this is not possible due to different rail geometries).

For an even number of rollers this has no effect. The NSD-sliders with installation option from above or below cannot be installed due to the position of the rollers in reference to the installation side, therefore they are available in the configurations A and B (see fig. 99).

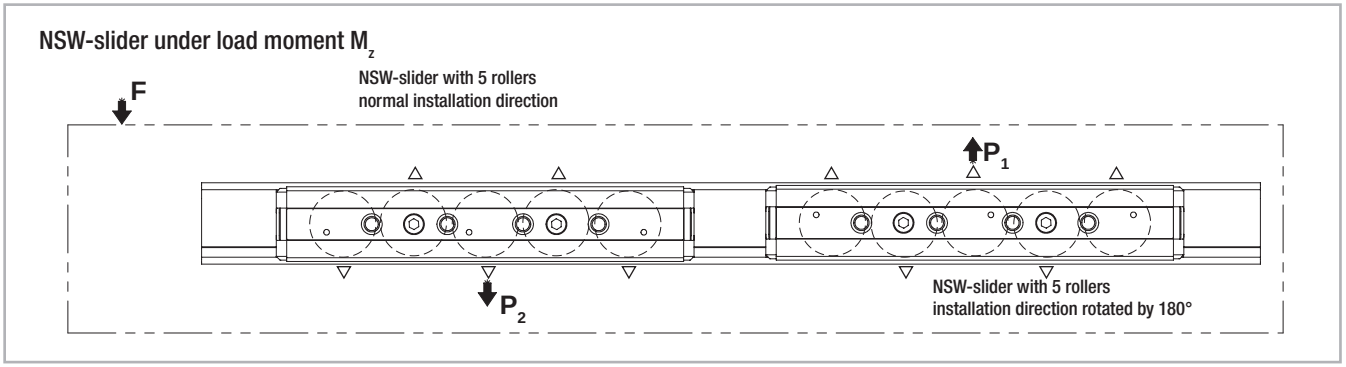

Fig. 98

NSD-slider under load moment M_z

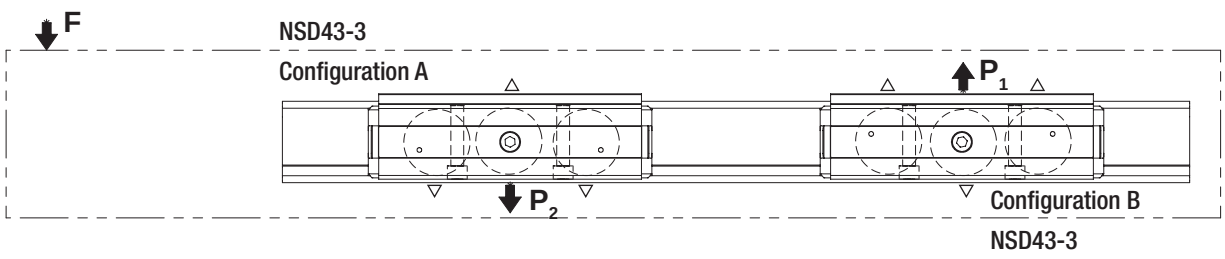

Fig. 99

Slider configurations for various load cases

Arrangement DS

This is the recommended arrangement for use of two sliders under M_z-moment when using one rail. Also see previous page: Two sliders under M_z moment load.

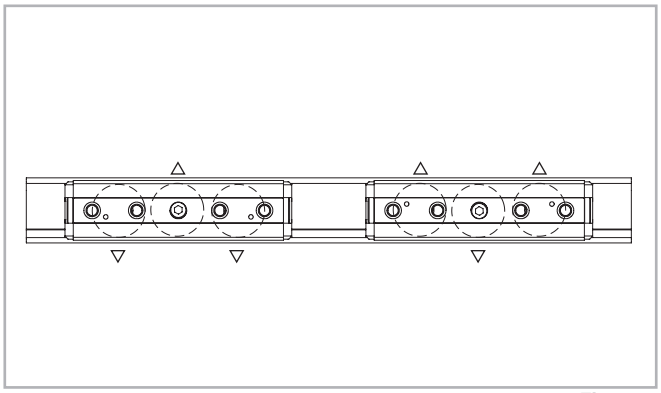

Fig. 100

Arrangement DD

When using a pair of guide rails with two sliders each under M_z moment load, the second system should be designed in arrangement DD. This results in the following combination: one guide rail with two sliders in arrangement DS and the other guide rail with 2 sliders in arrangement DD. This allows even load and moment distribution between the two parallel rails.

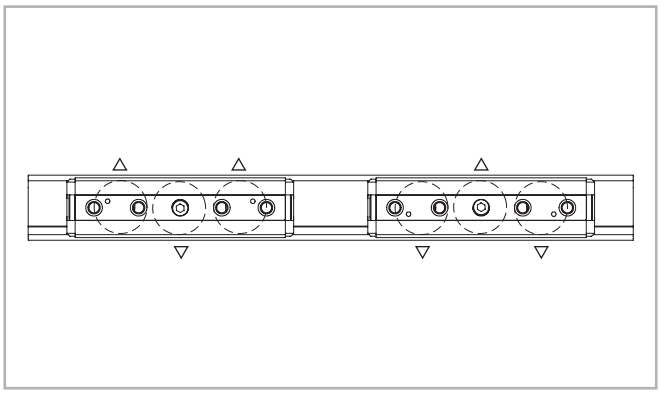

Fig. 101

Arrangement DA

Standard arrangement if no other information is given. This arrangement is recommended if the load point is located within the two outside points of the sliders.

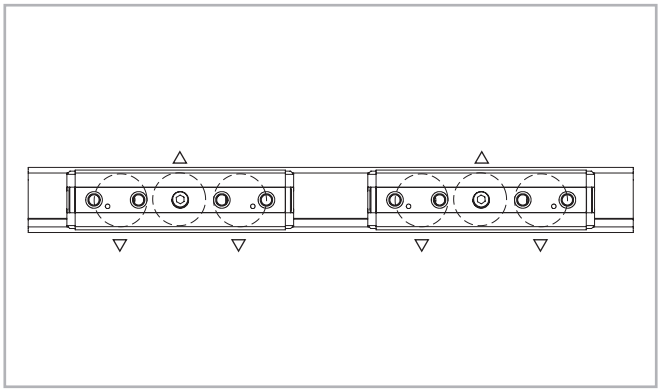

Fig. 102

Load capacities

Slider

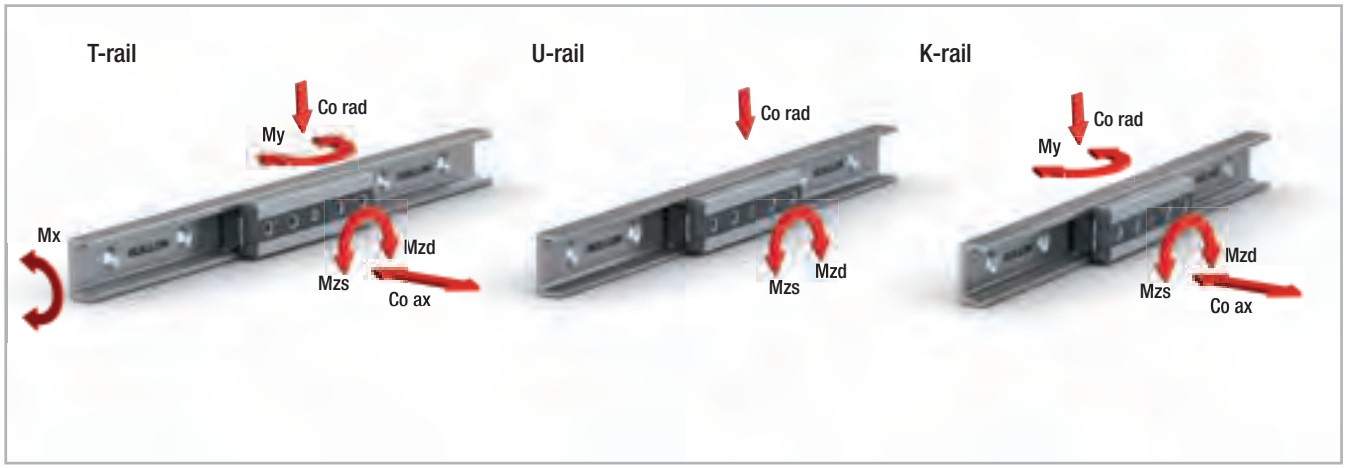

Fig. 103

The load capacities in the following tables each apply for one slider.

When using the slider in U-rails (floating bearing rails) the values are C_{0ax} = 0, M_x = 0 and M_y = 0. When using the sliders in K-rails (compensation rails) the value is: M_x = 0.

Type	No. of rollers	Load capacities and moments							Weight
		C [N]	C_{0rad} [N]	C_{0ax} [N]	M_x [Nm]	M_y [Nm]	M_z [Nm]		
							M_{zd}	M_{zs}	[kg]
NSW18-3 -...	3	1530	820	260	1.5	4.7	8.2	8.2	0.096
NSW18-4A -...	4	1530	820	300	2.8	7	8.2	24.7	0.096
NSW18-4B -...	4	1530	820	300	2.8	7	24.7	8.2	0.11
NSW18-5 -...	5	1830	975	360	2.8	9.4	24.7	24.7	0.11
NSW18-6A -...	6	1830	975	440	3.3	11.8	24.7	41.1	0.138
NSW18-6B -...	6	1830	975	440	3.3	11.8	41.1	24.7	0.138
NSW28-3 -...	3	4260	2170	640	6.2	16	27.2	27.2	0.23
NSW28-4A -...	4	4260	2170	750	11.5	21.7	27.2	81.7	0.29
NSW28-4B -...	4	4260	2170	750	11.5	21.7	81.7	27.2	0.29
NSW28-5 -...	5	5065	2580	900	11.5	29	81.7	81.7	0.35
NSW28-6A -...	6	5065	2580	1070	13.7	36.2	81.7	136.1	0.42
NSW28-6B -...	6	5065	2580	1070	13.7	36.2	136.1	81.7	0.42
NSD28-3A -...	3	4260	2170	640	6.2	16	27.2	27.2	0.23
NSD28-3B -...	3	4260	2170	640	6.2	16	27.2	27.2	0.23
NSD28-5A -...	5	5065	2580	900	11.5	29	81.7	81.7	0.35
NSD28-5B -...	5	5065	2580	900	11.5	29	81.7	81.7	0.35

Tab. 35

Type	No. of rollers	Load capacities and moments							Weight [kg]
		C [N]	C_{0rad} [N]	C_{0ax} [N]	M_x [Nm]	M_y [Nm]	M_z [Nm]		
							M_{zd}	M_{zs}	
NSW35-3 -...	3	8040	3510	1060	12.9	33.7	61.5	61.5	0.44
NSW35-4A -...	4	8040	3510	1220	23.9	43.3	52.7	158.1	0.53
NSW35-4B -...	4	8040	3510	1220	23.9	43.3	158.1	52.7	0.53
NSW35-5 -...	5	9565	4180	1460	23.9	57.7	158.1	158.1	0.64
NSW35-6A -...	6	9565	4180	1780	28.5	72.2	158.1	263.4	0.76
NSW35-6B -...	6	9565	4180	1780	28.5	72.2	263.4	158.1	0.76
NSD35-3A -...	3	8040	3510	1060	12.9	33.7	61.5	61.5	0.44
NSD35-3B -...	3	8040	3510	1060	12.9	33.7	61.5	61.5	0.44
NSD35-5A -...	5	9565	4180	1460	23.9	57.7	158.1	158.1	0.64
NSD35-5B -...	5	9565	4180	1460	23.9	57.7	158.1	158.1	0.64
NSW43-3 -...	3	12280	5500	1570	23.6	60	104.5	104.5	0.8
NSW43-4A -...	4	12280	5500	1855	43.6	81.5	104.5	313.5	1.02
NSW43-4B -...	4	12280	5500	1855	43.6	81.5	313.5	104.5	1.02
NSW43-5 -...	5	14675	6540	2215	43.6	108.6	313.5	313.5	1.24
NSW43-6A -...	6	14675	6540	2645	52	135.8	313.5	522.5	1.47
NSW43-6B -...	6	14675	6540	2645	52	135.8	522.5	313.5	1.47
NSA43-3 -...	3	12280	5100	1320	0	50.4	96.9	96.9	0.8
NSA43-4A -...	4	12280	5100	1320	0	54.3	96.9	290.7	1.02
NSA43-4B -...	4	12280	5100	1320	0	54.3	290.7	96.9	1.02
NSA43-5 -...	5	14675	6065	1570	0	108.7	290.7	290.7	1.24
NSA43-6A -...	6	14675	6065	1570	0	108.7	290.7	484.5	1.47
NSA43-6B -...	6	14675	6065	1570	0	108.7	484.5	290.7	1.47
NSD43-3A -...	3	12280	5500	1570	23.6	60	104.5	104.5	0.8
NSD43-3B -...	3	12280	5500	1570	23.6	60	104.5	104.5	0.8
NSD43-5A -...	5	14675	9540	2215	43.6	108.6	313.5	313.5	1.24
NSD43-5B -...	5	14675	9540	2215	43.6	108.6	313.5	313.5	1.24
NSDA43-3A -...	3	12280	5100	1320	0	50.4	96.9	96.9	0.8
NSDA43-3B -...	3	12280	5100	1320	0	50.4	96.9	96.9	0.8
NSDA43-5A -...	5	14675	6065	1570	0	108.7	290.7	290.7	1.24
NSDA43-5B -...	5	14675	6065	1570	0	108.7	290.7	290.7	1.24
NSW63-3-2ZR	3	30750	12500	6000	125	271	367	367	2.44
NSW63-4A-2ZR	4	30750	12500	7200	250	413	367	1100	3.17
NSW63-4B-2ZR	4	30750	12500	7200	250	413	1100	367	3.17
NSW63-5-2ZR	5	36600	15000	8500	250	511	1100	1100	3.89
NSW63-6A-2ZR	6	36600	15000	10000	350	689	1100	1830	4.60
NSW63-6B-2ZR	6	36600	15000	10000	350	689	1830	1100	4.60
NSA63-3-2ZR	3	30750	11550	5045	0	235	335	335	2.44
NSA63-4A-2ZR	4	30750	11550	5045	0	294	335	935	3.17
NSA63-4B-2ZR	4	30750	11550	5045	0	294	935	335	3.17
NSA63-5-2ZR	5	36600	13745	6000	0	589	935	935	3.89
NSA63-6A-2ZR	6	36600	13745	6000	0	589	935	1560	4.60
NSA63-6B-2ZR	6	36600	13745	6000	0	589	1560	935	4.60

Tab. 36

Product dimensions

Rail T, U, K

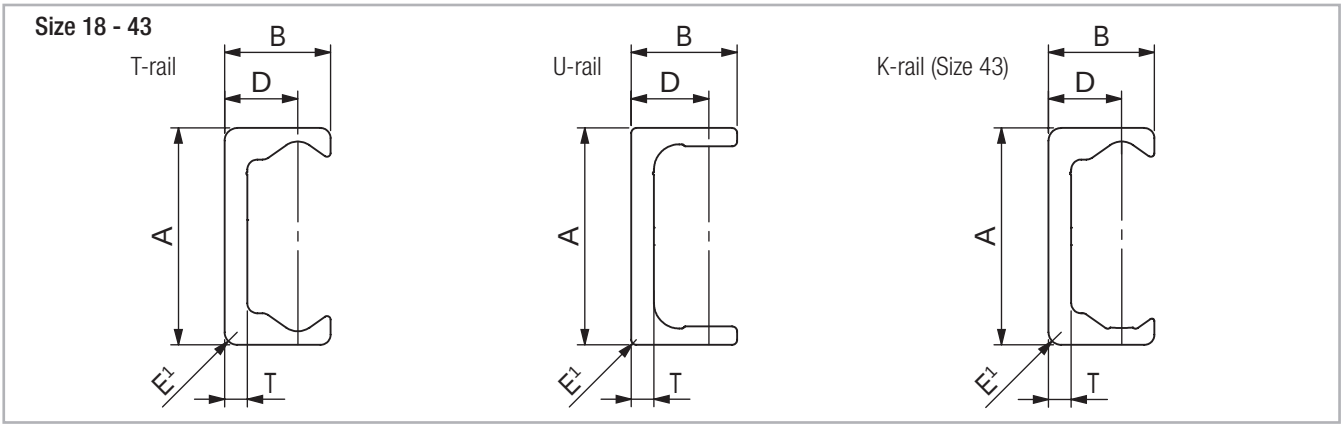

Fig. 104

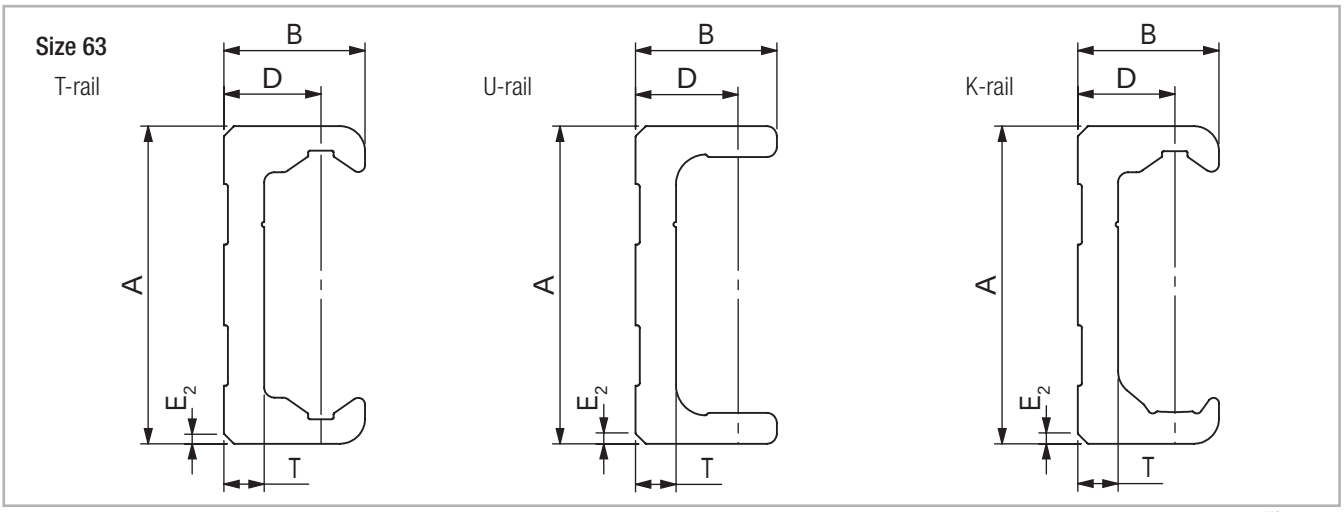

Fig. 105

Holes

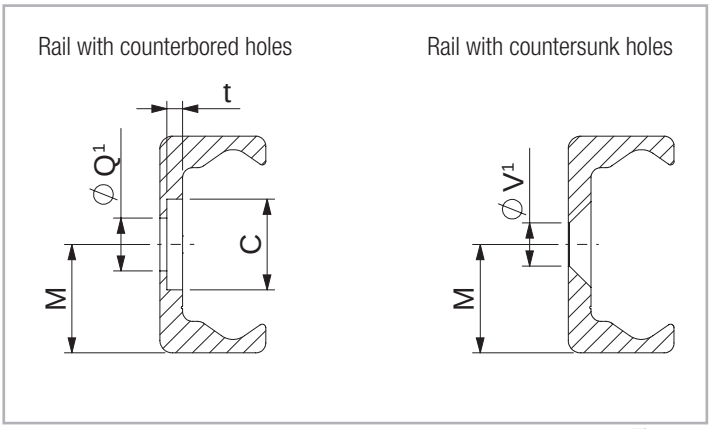

Fig. 106

Q¹ Fixing holes for Torx® screws with low head (custom design) included in scope of supply

V¹ Fixing holes for countersunk head screws according to DIN 7991

Type	Size	A [mm]	B [mm]	D [mm]	M [mm]	E_1 [mm]	T [mm]	C [mm]	Weight [kg/m]	E_2 [°]	t [mm]	Q^1 [mm]	V^1 [mm]
TLC TLV	18	18	8.25	5.75	9	1.5	2.8	9.5	0.55	-	2	M4	M4
	28	28	12.25	8.5	14	1	3	11	1.0	-	2	M5	M5
	35	35	16	12	17.5	2	3.5	14.5	1.65	-	2.7	M6	M6
	43	43	21	14.5	21.5	2.5	4.5	18	2.6	-	3.1	M8	M8
	63	63	28	19.25	31.5	-	8	15	6.0	2x45	5.2	M8	M10
ULC ULV	18	18	8.25	5.75	9	1	2.6	9,5	0.55	-	1.9	M4	M4
	28	28	12	8.5	14	1	3	11	1.0	-	2	M5	M5
	35	35	16	12	17.5	1	3.5	14.5	1.65	-	2.7	M6	M6
	43	43	21	14.5	21.5	1	4.5	18	2.6	-	3.1	M8	M8
	63	63	28	19.25	31.5	-	8	15	6.0	2x45	5.2	M8	M10
KLC KLV	43	43	21	14.5	21.5	2.5	4.5	18	2.6	-	3.1	M8	M8
	63	63	28	19.25	31.5	-	8	15	6.0	2x45	5.2	M8	M10

Tab. 37

Rail length

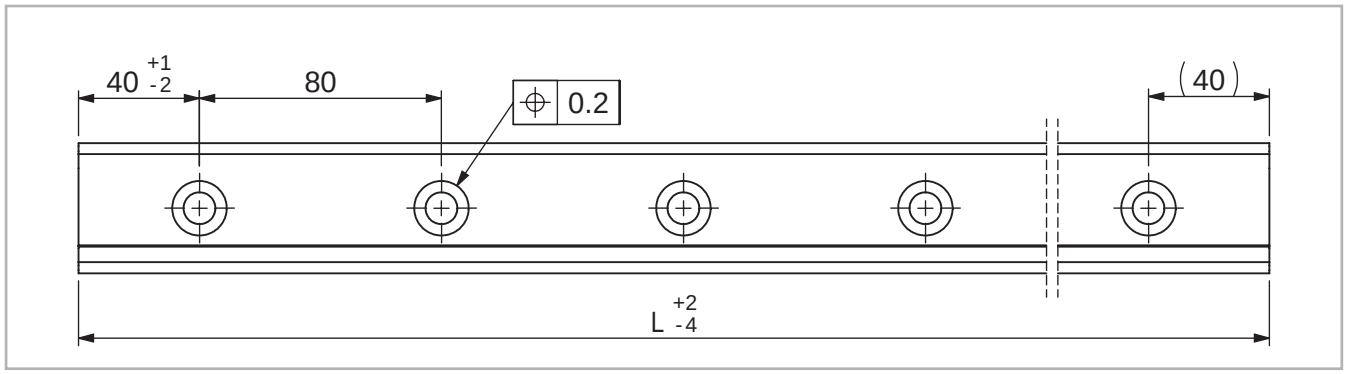

Fig. 107

Type	Size	Min length [mm]	Max length [mm]	Available standard lengths L [mm]
TLC TLV ULC ULV	18	160	2000	160 - 240 - 320 - 400 - 480 - 560 - 640 - 720 - 800 - 880 - 960 - 1040 - 1120 - 1200 - 1280 - 1360 - 1440 - 1520 - 1600 - 1680 - 1760 - 1840 - 1920 - 2000 - 2080 - 2160 - 2240 - 2320 - 2400 - 2480 - 2560 - 2640 - 2720 - 2800 - 2880 - 2960 - 3040 - 3120 - 3200 - 3280 - 3360 - 3440 - 3520 - 3600
	28	240	3200	
	35	320	3600	
	43	400	3600	
	63	560	3600	
KLC KLV	43	400	3600	
	63	560	3600	

Longer single rails up to max. 4,080 mm on request
Longer rail systems see pg. CR-88 Joined rails

Tab. 38

NSW/NSA-version slider

NSW/NSA-series

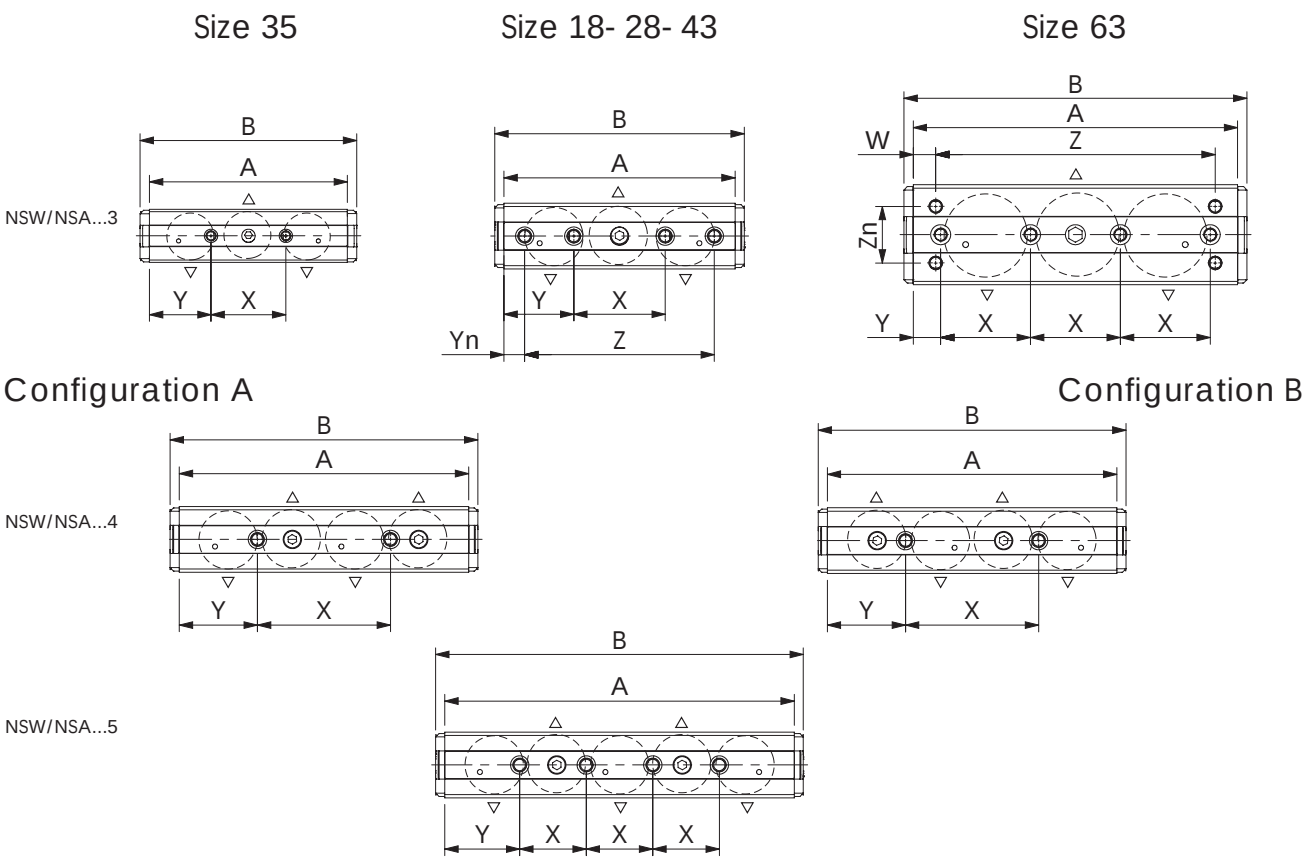

Fig. 108

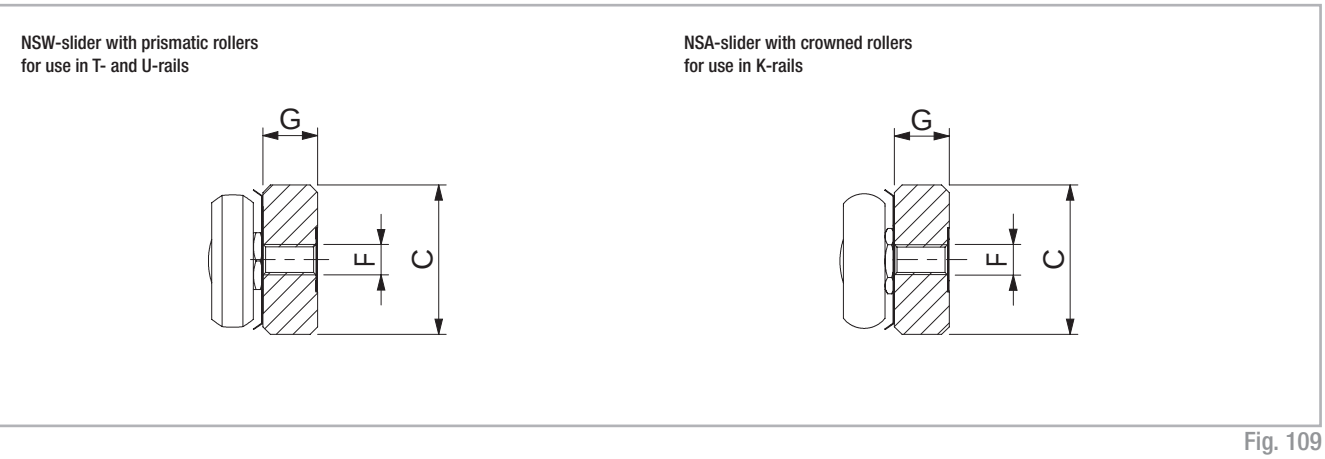

Fig. 109

Type	Size	No. of Rollers	A [mm]	B [mm]	C [mm]	G [mm]	F [mm]	X [mm]	Y [mm]	Z [mm]	Yn [mm]	Zn [mm]	W [mm]	No. of holes	Roller type used*
NSW	18	3	70	78	16	7.2	M5	20	25	52	9	-	-	3	CPA18-CPN18
		4	92	100				40	26	-	-			4	CPA18
		5	112	120				20	26					5	CPA18
		6	132	140				40	26					6	CPA18
	28	3	97	108	24.9	9.7	M5	35	31	78	9.5	-	-	4	CPA28-CPN28
		4	117	128				50	33.5	-	-			2	CPA28
		5	142	153				25	33.5					4	CPA28
		6	167	178				50	33.5					3	CPA28
	35	3	119	130	32	11.9	M6	45	37	-	-	-	-	2	CPA35-CPN35
		4	139	150				60	39.5					2	CPA35
		5	169	180				30	39.5					4	CPA35
		6	199	210				60	39.5					3	CPA35
	43	3	139	150	39.5	14.5	M8	55	42	114	12.5	-	-	4	CPA43-CPN43
		4	174	185				80	47	-	-			2	CPA43
		5	210	221				40	45					4	CPA43
		6	249	260				80	44.5					3	CPA43
	63	3	195	206	60	20.2	M8	54	16.5	168	-	34	13.5	4+4	CPA63
		4	250	261				54	17	-		-	-	5	CPA63
		5	305	316				54	17.5					6	CPA63
		6	360	371				54	18					7	CPA63
NSA	43	3	139	150	39.5	14.5	M8	55	42	114	12.5	-	-	4	CRPA43-CRPN43
		4	174	185				80	47	-	-			2	CRPA43
		5	210	221				40	45					4	CRPA43
		6	249	260				80	44.5					3	CRPA43
	63	3	195	206	60	20.2	M8	54	16.5	168	-	34	13.5	4+4	CRPA63
		4	250	261				54	17	-		-	-	5	CRPA63
		5	305	316				54	17.5					6	CRPA63
		6	360	371				54	18					7	CRPA63

* Information about the roller type, see pg. CR-64, tab. 45

Tab. 39

NSD/NSDA-version slider

NSD/NSDA-series

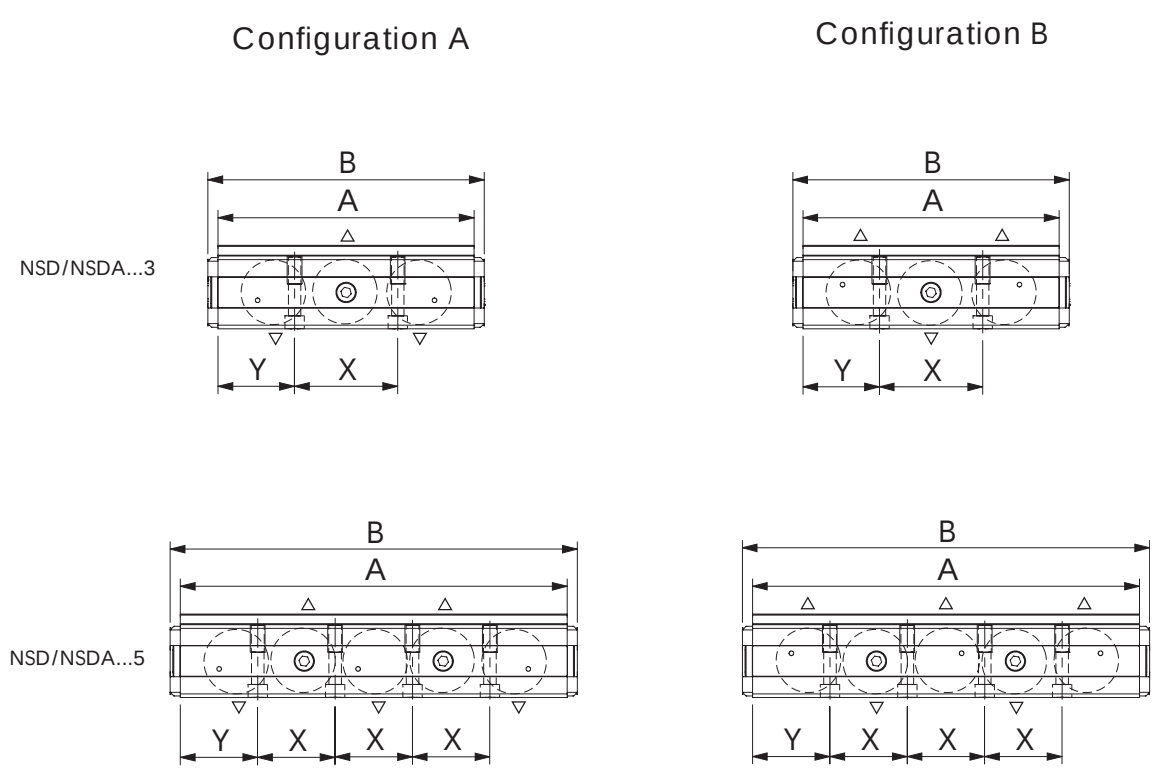

Fig. 110

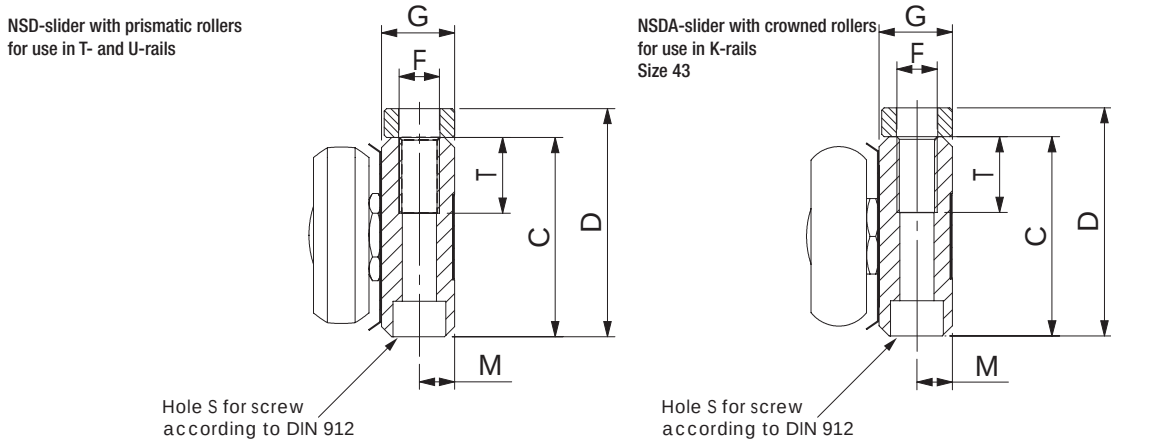

Fig. 111

Type	Size	No. of rollers	A [mm]	B [mm]	C [mm]	D [mm]	G [mm]	M [mm]	S	T [mm]	F [mm]	X [mm]	Y [mm]	No. of holes	Roller type used*
NSD	28	3	97	108	24.9	30.45	9.7	4.7	M5	15	M6	36	30.5	2	CPA28
		5	142	153								27	30.5	4	CPA28
	35	3	119	130	32	36.35	12.4	6	M6	15	M8	45	37	2	CPA35
		5	169	180								30	39.5	4	CPA35
	43	3	139	150	39.5	45.25	14.5	7	M6	15	M8	56	41.5	2	CPA43
		5	210	221								42	42	4	CPA43
NSDA	43	3	139	150	39.5	45.25	14.5	7	M6	15	M8	56	41.5	2	CRPA43
		5	210	221								42	42	4	CRPA43

* Information about the roller type, see pg. CR-64, tab. 45

Tab. 40

T-rail with NSW / NSD slider

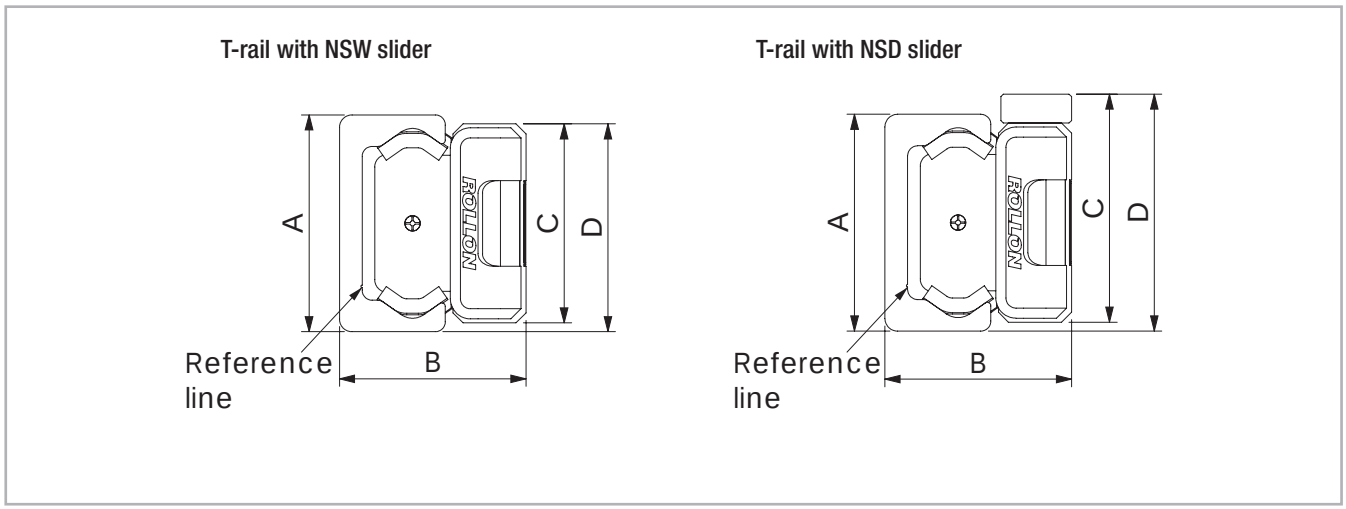

Fig. 112

Configuration	Size	A [mm]		B [mm]		C [mm]		D [mm]	
TL... / NSW	18	18	+0.2 -0.10	16.5	±0.15	16	0 -0.2	17	+0.1 -0.3
	28	28	+0.2 -0.10	23.9	±0.15	24.9	0 -0.2	26.45	+0.1 -0.3
	35	35	+0.35 -0.10	30.2	±0.15	32	0 -0.2	33.5	+0.2 -0.4
	43	43	+0.3 -0.10	37	±0.15	39.5	0 -0.2	41.25	+0.2 -0.4
	63	63	+0.3 -0.10	50.5	±0.15	60	0 -0.2	61.5	+0.2 -0.4
TL... / NSD	28	28	+0.2 -0.10	23.9	±0.15	24.9	0 -0.2	32	+0.1 -0.3
	35	35	+0.35 -0.10	30.2	±0.15	32	0 -0.2	37.85	+0.2 -0.4
	43	43	+0.3 -0.10	37	±0.15	39.5	0 -0.2	47	+0.2 -0.4

Tab. 41

U-rail with NSW / NSD slider

U-rail with NSW slider

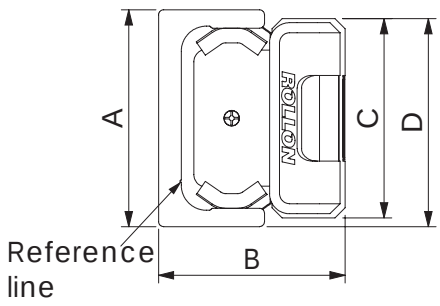

U-rail with NSD slider

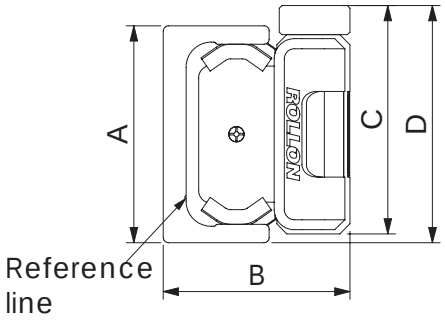

Fig. 113

Configuration	Size	A [mm]		B_{nom*} [mm]	C [mm]		D [mm]	
UL... / NSW	18	18	+0.25 -0.10	15	16	0 -0.2	17	+0.1 -0.3
	28	28	+0.25 -0.10	23.9	24.9	0 -0.2	26.45	+0.1 -0.3
	35	35	+0.35 -0.10	30.2	32	0 -0.2	33.5	+0.2 -0.4
	43	43	+0.35 -0.10	37	39.5	0 -0.2	41.25	+0.2 -0.4
	63	63	+0.35 -0.10	50.5	60	0 -0.2	61.5	+0.2 -0.4
UL... / NSD	28	28	+0.25 -0.10	23.9	24.9	0 -0.2	32	+0.1 -0.3
	35	35	+0.35 -0.10	30.2	32	0 -0.2	37.85	+0.2 -0.4
	43	43	+0.35 -0.10	37	39.5	0 -0.2	47	+0.2 -0.4

Tab. 42

* see pg. CR-72 Offset T+U-system
see pg. CR-75 Offset K+U-system

K-rail with NSA / NSDA slider

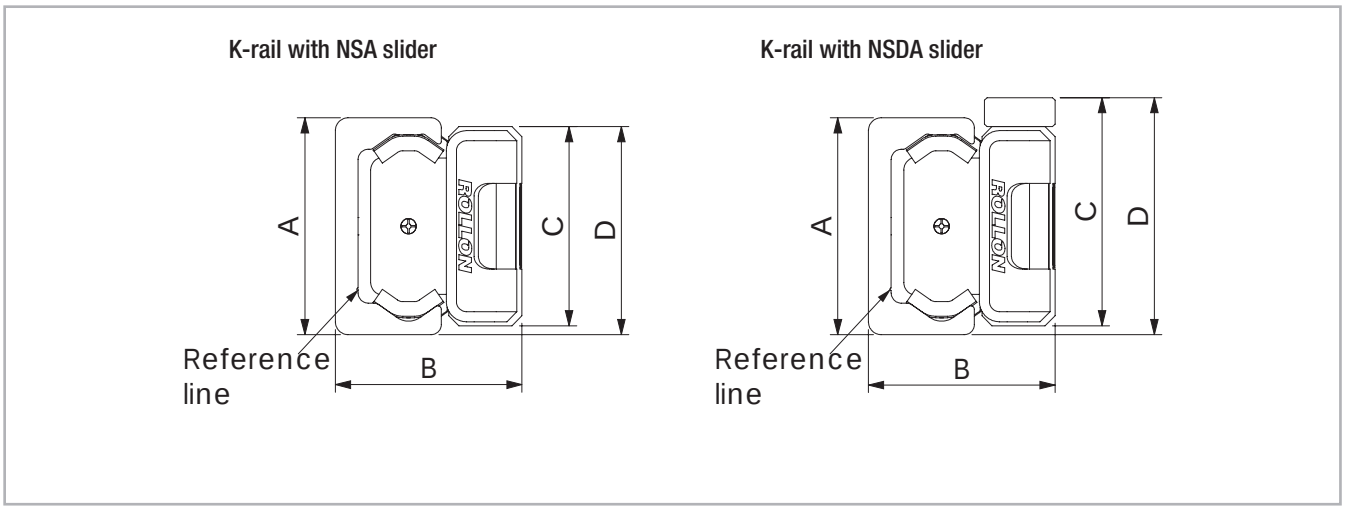

The K-rail enables the slider to rotate around its longitudinal axis (see pg. CR-73)

Fig. 114

Configuration	Size	A [mm]		B [mm]		C [mm]		D [mm]	
KL... / NSA	43	43	+0.35 -0.1	37	±0.15	39.5	0 -0.2	41.25	+0.2 -0.4
	63	63	+0.35 -0.1	50.5	±0.15	60	0 -0.2	61.5	+0.2 -0.4
KL... / NSDA	43	43	+0.35 -0.1	37	±0.15	39.5	0 -0.2	41.25	+0.2 -0.4

Tab. 43

Offset of fixing holes

Principle representation of offset

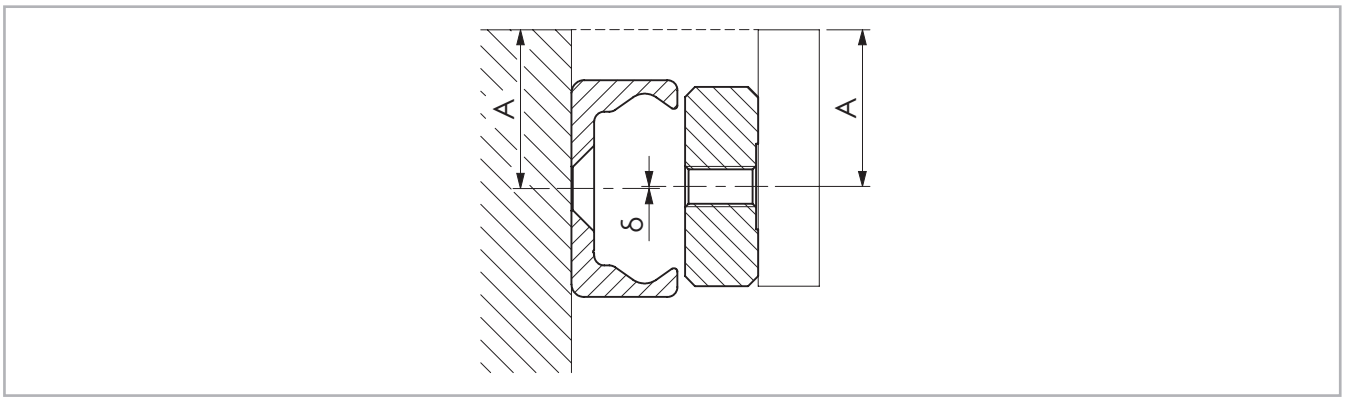

Fig. 115

Configuration	Size	δ nominal [mm]	δ maximum [mm]	δ minimum [mm]
TLC / NSW	18	0	+0.5	-0.5
	28		+0.5	-0.5
	35		+0.6	-0.6
	43		+0.6	-0.6
	63		+0.65	-0.65
KLC / NSA	43		+0.6	-0.6
	63		+0.65	-0.65
ULC / NSW	18		+0.5	-0.5
	28		+0.5	-0.5
	35		+0.6	-0.6
	43		+0.6	-0.6
	63		+0.65	-0.65
TLV /NSW	18		+0.35	-0.35
	28		+0.35	-0.35
	35		+0.45	-0.45
	43		+0.45	-0.45
	63		+0.5	-0.5
KLV / NSA	43		+0.45	-0.45
	63		+0.5	-0.5
ULV / NSW	18		+0.35	-0.35
	28		+0.35	-0.35
	35		+0.45	-0.45
	43		+0.45	-0.45
	63		+0.5	-0.5

Tab. 44

Accessories

Rollers

Version 1
Prismatic (T- and U-rail)

CPN
Concentric roller

CPA
Eccentric roller

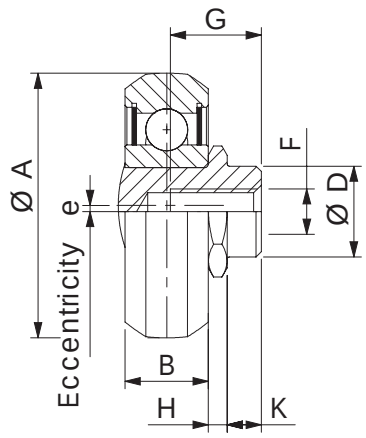

Version 2
Crowned (K-rail)

CRPN
Concentric roller

CRPA
Eccentric roller

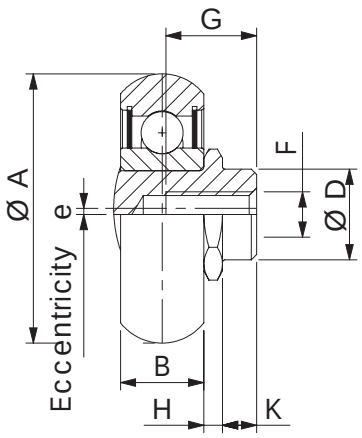

Seals: 2RS is the splash-proof seal, 2Z (2ZR for size 63) is the steel cover disc
Note: The rollers are lubricated for life

Fig. 116

Type		A [mm]	B [mm]	D [mm]	e [mm]	H [mm]	K [mm]	G [mm]	F	C [N]	C_{0rad} [N]	Weight [kg]
Steel	Inox											
CPN18-2RS	CXPNX18-2RS	14	4	6	-	1.55	1.8	5.5	M4	765	410	0.004
CPN18-2Z	-	14	4	6	-	1.55	1.8	5.5	M4	765	410	0.004
CPA18-2RS	CXPAX18-2RS	14	4	6	0.4	1.55	1.8	5.5	M4	765	410	0.004
CPA18-2Z	-	14	4	6	0.4	1.55	1.8	5.5	M4	765	410	0.004
CPN28-2RS	CXPNX28-2RS	23.2	7	10	-	2.2	3.8	7	M5	2130	1085	0.019
CPN28-2Z	-	23.2	7	10	-	2.2	3.8	7	M5	2130	1085	0.019
CPA28-2RS	CXPAX28-2RS	23.2	7	10	0.6	2.2	3.8	7	M5	2130	1085	0.019
CPA28-2Z	-	23.2	7	10	0.6	2.2	3.8	7	M5	2130	1085	0.019
CPN35-2RS	CXPNX35-2RS	28.2	7.5	12	-	2.55	4.2	9	M5	4020	1755	0.032
CPN35-2Z	-	28.2	7.5	12	-	2.55	4.2	9	M5	4020	1755	0.032
CPA35-2RS	CXPAX35-2RS	28.2	7.5	12	0.7	2.55	4.2	9	M5	4020	1755	0.032
CPA35-2Z	-	28.2	7.5	12	0.7	2.55	4.2	9	M5	4020	1755	0.032
CPN43-2RS	CXPNX43-2RS	35	11	12	-	2.5	4.5	12	M6	6140	2750	0.06
CPN43-2Z	-	35	11	12	-	2.5	4.5	12	M6	6140	2750	0.06
CPA43-2RS	CXPAX43-2RS	35	11	12	0.8	2.5	4.5	12	M6	6140	2750	0.06
CPA43-2Z	-	35	11	12	0.8	2.5	4.5	12	M6	6140	2750	0.06
CPN63-2ZR	CXPNX63-2RS	50	17.5	18	-	2.3	6	16	M8	15375	6250	0.19
CPA63-2ZR	CXPAX63-2RS	50	17.5	18	1.2	2.3	6	16	M10	15375	6250	0.19
CRPN43-2Z	CRXPNX43-2RS	35.6	11	12	-	2.5	4.5	12	M6	6140	2550	0.06
CRPA43-2Z	CRXPAX43-2RS	35.6	11	12	0.8	2.5	4.5	12	M6	6140	2550	0.06
CRPN63-2ZR	CRXPNX63-2RS	49.7	17.5	18	-	2.3	6	16	M8	15375	5775	0.19
CRPA63-2ZR	CRXPAX63-2RS	49.7	17.5	18	1.2	2.3	6	16	M10	15375	5775	0.19

Tab. 45

Wipers

Pair of wipers WNS

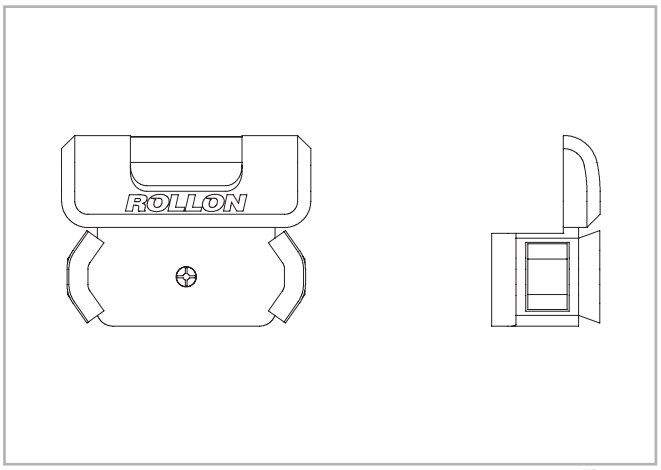

Fig. 117

Rail size	Pair of wipers
18	ZK-WNS18
28	ZK-WNS28
35	ZK-WNS35
43	ZK-WNS43
63	ZK-WNS63

Tab. 46

Alignment fixture AT (for T- and U-rail)

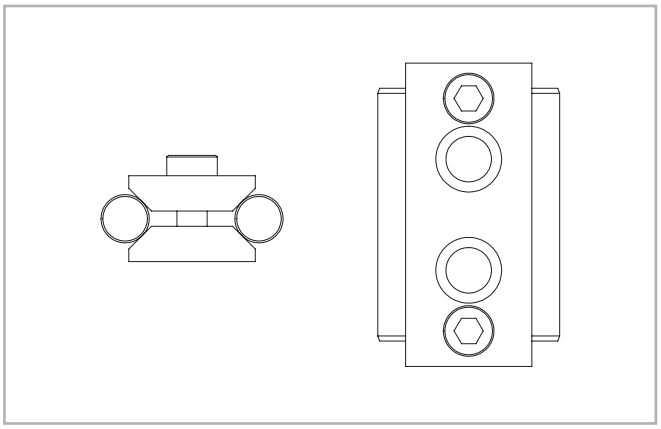

Fig. 118

Rail size	Alignment fixture
18	AT 18
28	AT 28
35	AT 35
43	AT 43
63	AT 63

Tab. 47

Alignment fixture AK (for K-rail)

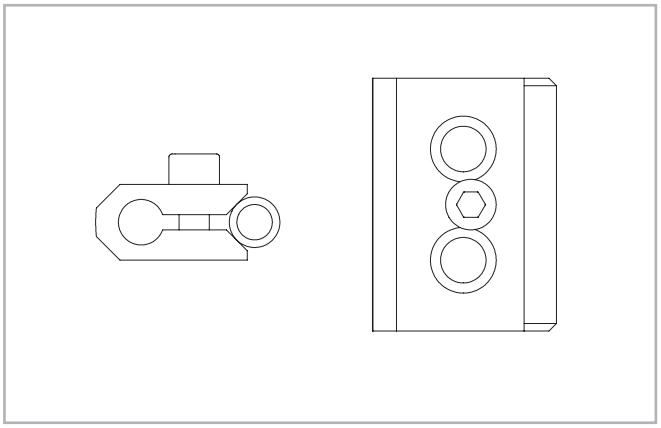

Fig. 119

Rail size	Alignment fixture
43	AK 43
63	AK 63

Tab. 48

Fixing screws

When a rail with counterbored holes is delivered, the Torx® screws are provided in the right quantity.

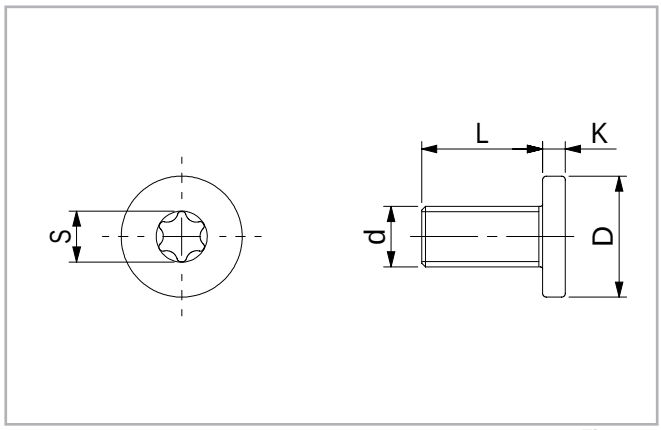

Fig. 120

Rail size	d	D [mm]	L [mm]	K [mm]	S	Tightening torque [Nm]
18	M4 x 0.7	8	8	2	T20	3
28	M5 x 0.8	10	10	2	T25	9
35	M6 x 1	13	13	2,7	T30	12
43	M8 x 1.25	16	16	3	T40	22
63	M8 x 1.25	13	20	5	T40	35

Tab. 49

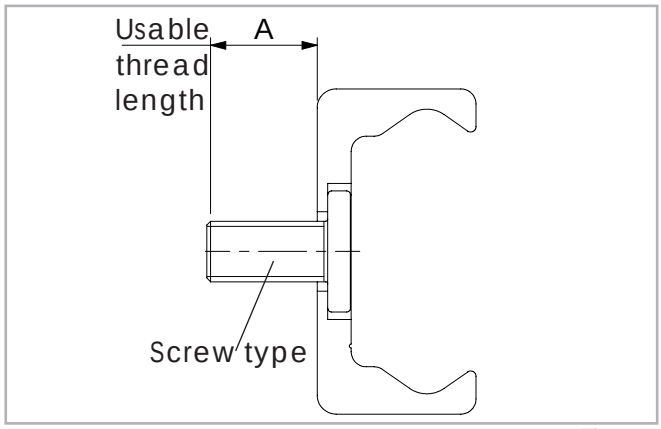

Fig. 121

Rail size	Screw type	Usable thread length [mm]
18	M4 x 8	7.2
28	M5 x 10	9
35	M6 x 13	12.2
43	M8 x 16	14.6
63	M8 x 20	17.2

Tab. 50

Manual clamp elements

Compact Rail guides can be secured with manual clamping elements. Areas of application are:

- Table cross beams and sliding beds
- Width adjustment, stops
- Positioning of optical equipment and measuring tables

The HK series is a manually activated clamping element. By using the freely adjustable clamping lever (except for HK 18, which uses hexagon socket bolt M6 DIN 913 with 3 mm drive) press the contact profile synchronously on the free surfaces of the rail. The floating mounted contact profiles guarantee symmetrical introduction of force on the guide rail.

HK 18

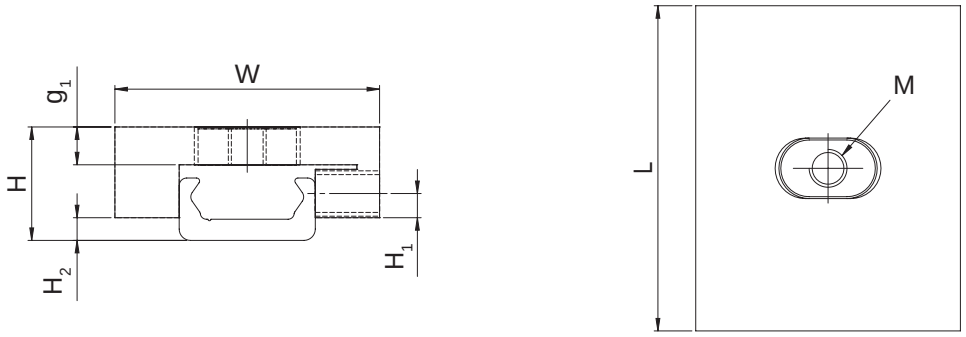

Fig. 122

HK 28-63 (except for size 35)

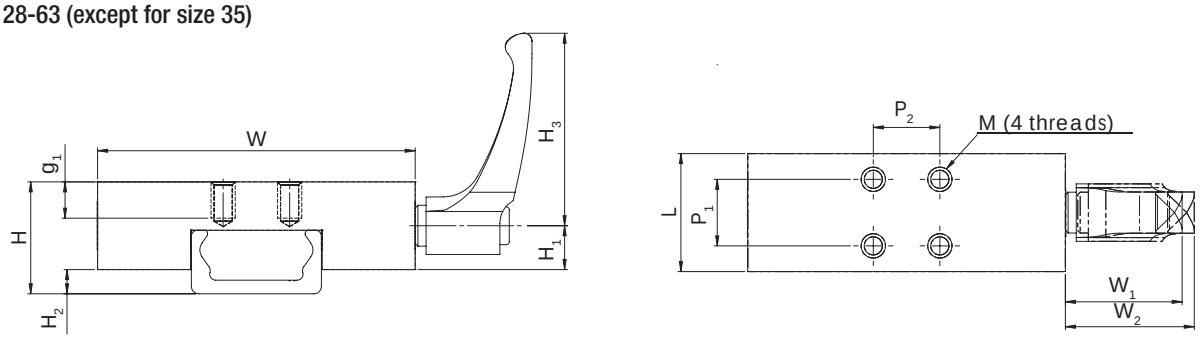

Fig. 123

Type	Size	Holding force	Tightening torque	Dimensions [mm]											M
		[N]	[Nm]	H	H_1	H_2	H_3	W	W_1	W_2	L	P_1	P_2	g_1	
HK1808A	18	150	0.5	15	3.2	3	-	35	-	-	43	0	0	6	M5
HK2808A	28	1200	7	24	17	5	64	68	38.5	41.5	24	15	15	6	M5
HK4308A	43	2000	15	37	28.5	8	78	105	46.5	50.5	39	22	22	12	M8
HK6308A	63	2000	15	50.5	35	9.5	80	138	54.5	59.5	44	26	26	12	M8

Tab. 51

Technical instructions

Linear accuracy

Linear accuracy is defined as the maximum deviation of the slider in the rail based on the side and support surface during straight line movement.

The linear accuracy, depicted in the graphs below, applies to rails that are carefully installed with all the provided screws on a level and rigid foundation.

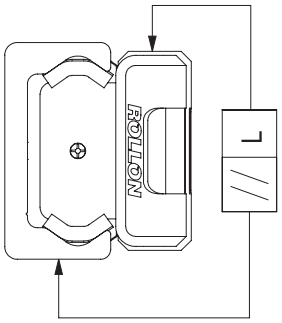

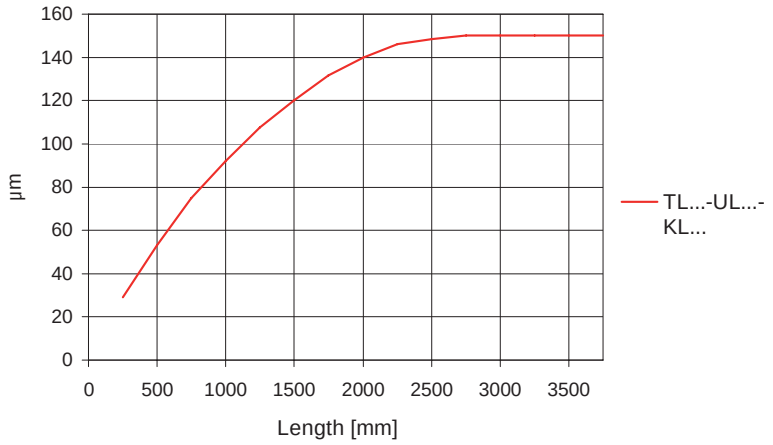

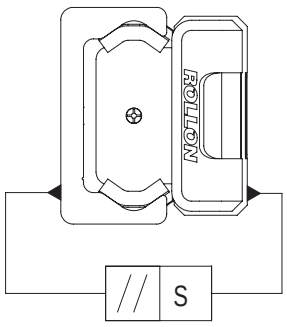

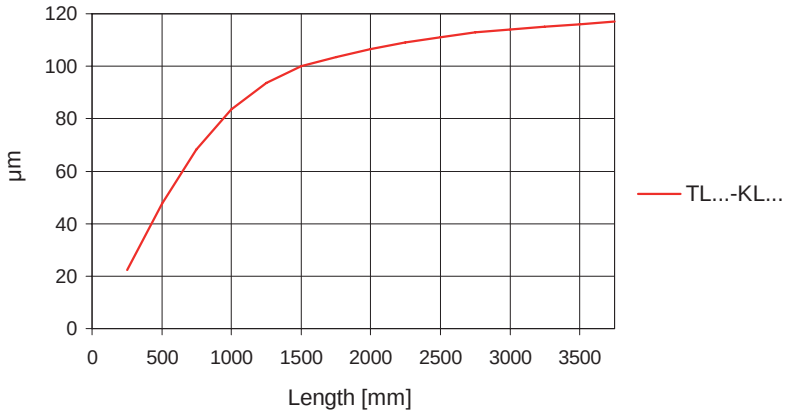

Fig. 124

Deviation of accuracy with two 3 roller sliders in one rail

Type	TL..., UL..., KL...
ΔL [mm] Slider with equal arrangement 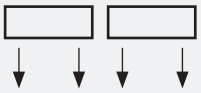	0.2
ΔL [mm] Slider with opposite arrangement 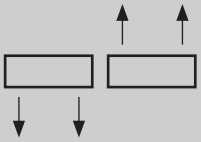	1.0
ΔS [mm]	0.05

Tab. 52

Supported sides

If a higher system rigidity is required, a support of the rail sides is recommended, which can also be used as the reference surface (see fig. 125). The minimum required support depth can be taken from the adjacent table (see tab. 53).

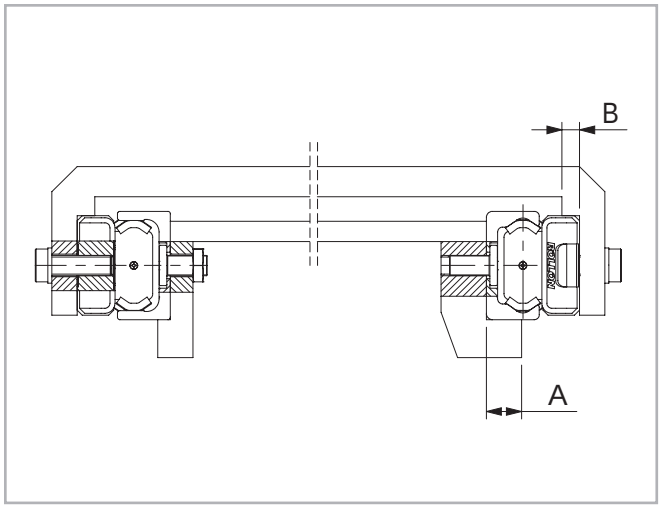

Fig. 125

Rail size	A [mm]	B [mm]
18	5	4
28	8	4
35	11	5
43	14	5
63	18	5

Tab. 53

T+U-system tolerance compensation

Axial deviations in parallelism

This problem occurs fundamentally by insufficient precision in the axial parallelism of the mounting surfaces, which results in an excessive load on the slider and thus causes drastically reduced service life.

The use of fixed bearing and compensating bearing rail (T+U-system) solves the unique problem of aligning two track, parallel guide systems. By using a T+U-system, the T-rail takes over the motion of the track while the U-rail serves as a support bearing and takes only radial forces and M_z moments.



Fig. 126

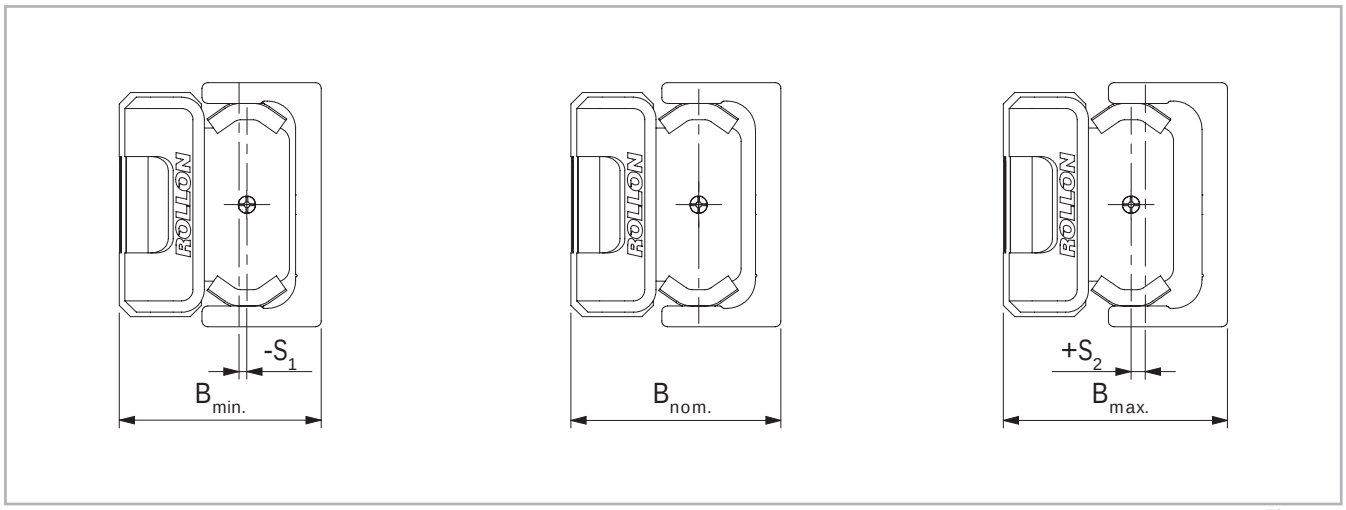

Fig. 127

T+U-system maximum offset

U-rails have flat parallel raceways that allow free lateral movement of the sliders. The maximum axial offset that can be compensated for in each slider of the U-rail is made up of the combined values S_1 and S_2 listed in table 54. Considered from a nominal value B_{nom} as the starting point, S_1 indicates the maximum offset into the rail, while S_2 represents the maximum offset towards the outside of the rail.

Slider type	S_1 [mm]	S_2 [mm]	B_{min} [mm]	B_{nom} [mm]	B_{max} [mm]
NSW18	0.3	1.1	16.2	16.5	17.6
NSW28 NSD28	0.6	1.3	23.3	23.9	25.2
NSW35 NSD35	1.3	2.7	28.9	30.2	32.9
NSW43 NSD43	1.4	2.5	35.6	37	39.5
NSW63	0.4	3.5	50.1	50.5	54

Tab. 54

The application example in the adjacent drawing (see fig. 129) shows that the T+U-system implements a problem-free function of the slider even with an angled offset in the mounting surfaces.

If the length of the guide rails is known, the maximum allowable angle deviation of the screwed surfaces can be determined using this formula (the slider in the U-rail moves here from the innermost position S_1 to outermost position S_2):

$$\alpha = \arctan\frac{S^*}{L}$$

S^* = Sum of S_1 and S_2
L = Length of rail

Fig. 128

The following table (tab. 55) contains guidelines for this maximum angle deviation α, achievable with the longest guide rail from one piece.

Size	Rail length [mm]	Offset S [mm]	Angle α [°]
18	2000	1.4	0.040
28	3200	1.9	0.034
35	3600	4	0.063
43	3600	3.9	0.062
63	3600	3.9	0.062

Tab. 55

The T+U-system can be designed in different arrangements (see fig. 130). A T-rail accepts the vertical components of load A U-rail attached underneath the component to be guided prevents the vertical panel from swinging and is used as moment support. In addition, a vertical offset in the structure, as well as possible existing unevenness of the support surface, is compensated.

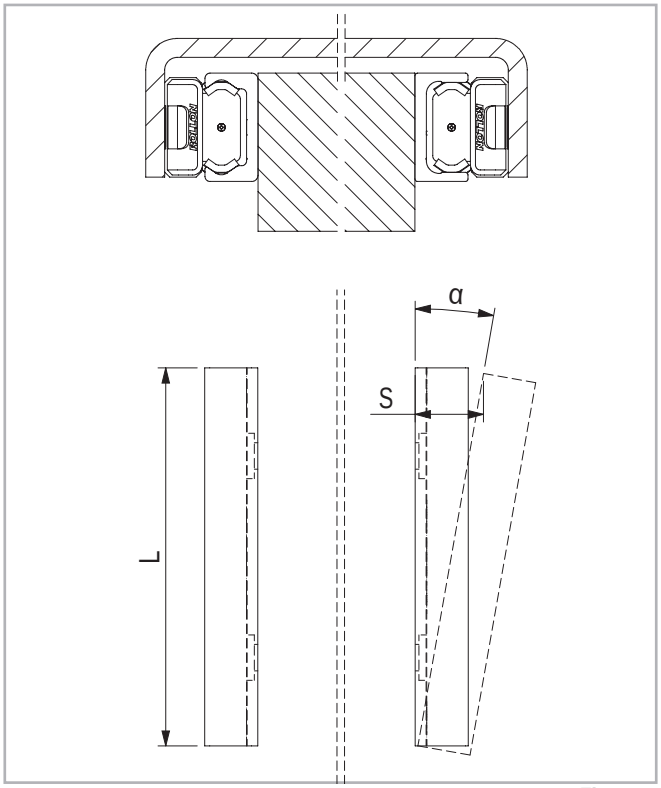

Fig. 129



Fig. 130

K+U-system tolerance compensation

Deviations in parallelism in two planes

The K+U-system, like the T+U-system, can compensate for axial deviations in parallelism. Additionally, the K+U system has the option of rotating the slider in the rail, which will compensate for other deviations in parallelism, e.g. height offset.

The unique raceway contour of the K-rail allows the slider a certain rotation around its longitudinal axis, with the same linear precision as with a T-rail. With the use of a K+U-system, the K-rail accounts for the main loads and the motion of the track. The U-rail is used as a support bearing and takes only radial forces and M_z moments. The K-rail must always be installed so that the radial load of the slider is always supported by at least 2 load bearing roller sliders, which lie on the V-shaped raceway (reference line) of the rail.



Fig. 131

K-rails and sliders are available in both sizes 43 and 63. The custom NSA-slider may only be used in K-rails and cannot be exchanged with other Rollon sliders. The maximum allowable rotation angle of the NSA- and NSW-sliders are shown in the following table 56 and figure 132. α_1 is the maximum rotation angle counterclockwise, α_2 is clockwise.

Slider type	α_1 [°]	α_2 [°]
NSA43 and NSW43	2	2
NSA63 and NSW63	1	1

Valuee referred to NSW slider in U rail

Tab. 56

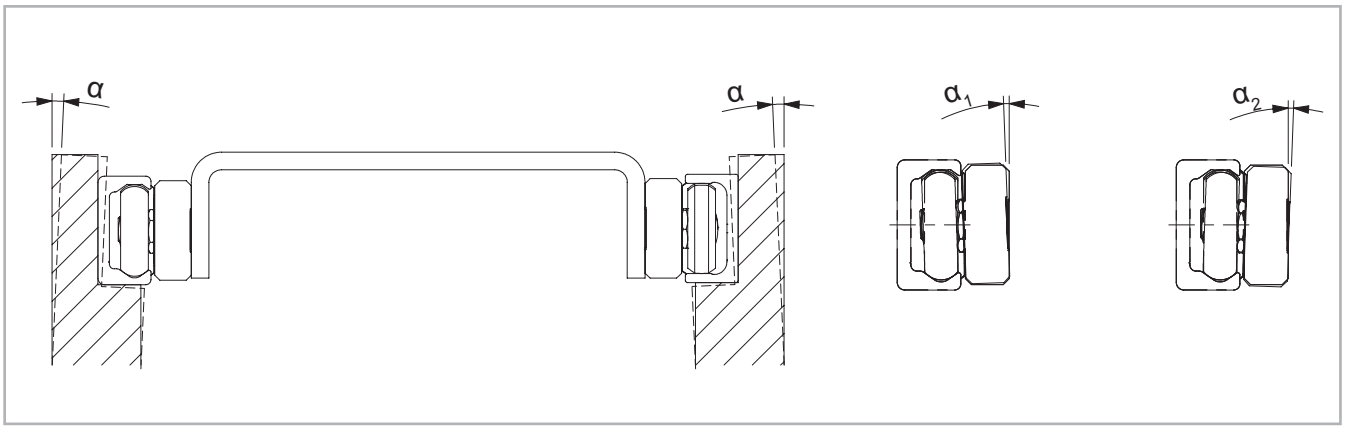

Fig. 132

K+U-system maximum offset

It must be noted that the slider in the U-rail will turn during the movement and rotation of the slider in the K-rail to allow an axial offset. During the combined effect of these movements, you must not exceed the maximum values (see tab. 57). If a maximum rotated NSW- slider is observed (2° for size 43 and 1° for size 56), the maximum and minimum position of the slider in the U rail results from the values B_{0max} and B_{0min}, which are already considered by the additional rotation caused axial offset. B_{0nom} is a recommended nominal starting value for the position of a NSW-slider in the U-rail of a K+U-system.

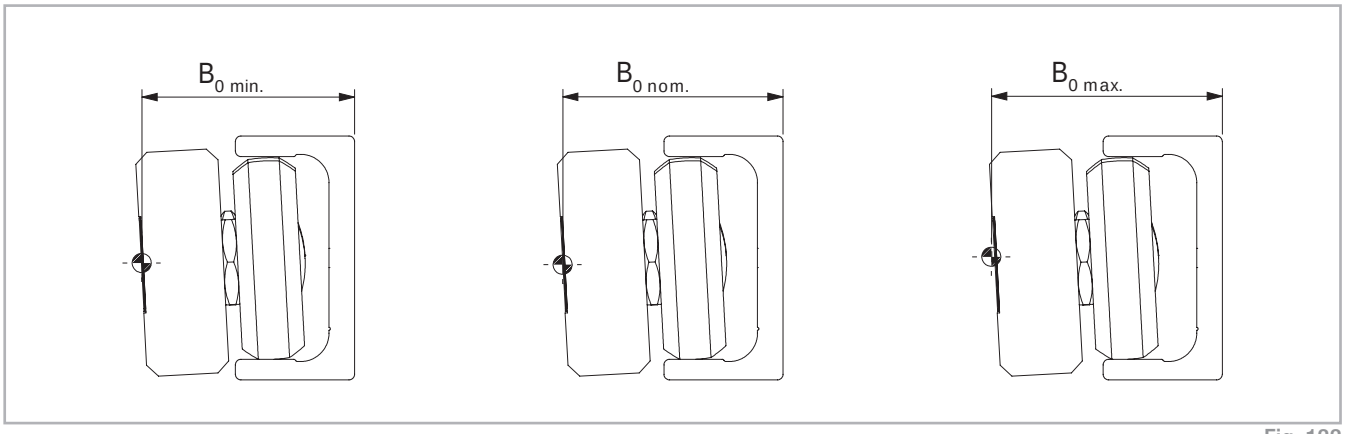

Fig. 133

Slider type	B_{0min} [mm]	B_{0nom} [mm]	B_{0max} [mm]
NSW43	37.6	38.85	40.1
NSD43	37.9	39.15	40.4
NSW63	49.85	51.80	53.75

Tab. 57

If a K-rail is used in combination with a U-rail, with guaranteed problem-free running and without extreme slider load, a pronounced height difference between the two rails can also be compensated for. The following illustration shows the maximum height offset b of the mounting surfaces in relation to the distance a of the rails (see fig. 134).

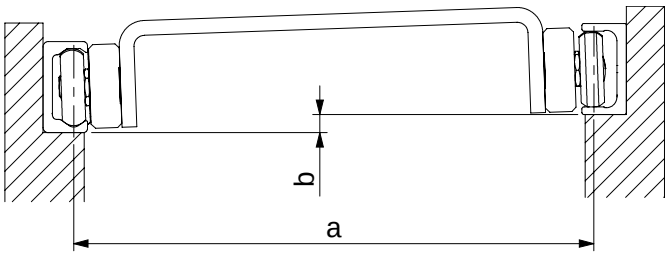

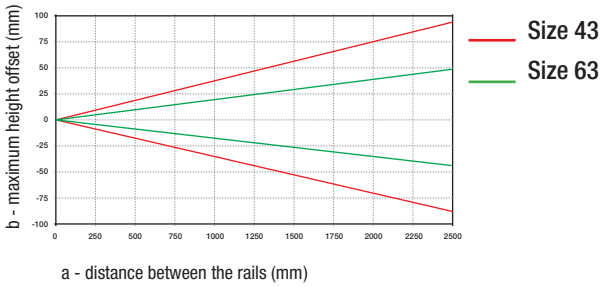

Fig. 134

Even the K+U-system can be used in different arrangements. If the same example as with the T+U-system is observed (see pg. CR-71, fig. 130), this solution, in addition to the prevention of vibrations and moments, also enables the compensation of larger deviations in parallelism in the vertical direction, without negative consequences to the guide. This is particularly important for longer strokes as it is more difficult to obtain a correct vertical parallelism.



Fig. 135

Preload

Preload classes

The factory installed systems, consisting of rails and sliders, are available in two preload classes:

Standard preload K1 means a rail-slider combination with minimum preload which means the rollers are adjusted free of clearance for optimal running properties.

Usually preload K2 is used for rail-slider systems for increasing the rigidity. When using a system with K2 preload a reduction of the loading capacities and service life must be taken into consideration (see tab. 59).

Preload class	Reduction y
K1	-
K2	0.1

Tab. 58

This coefficient y is used in the calculation formula for checking the static load and lifetime (see pg. CR-93, fig. 172 and pg. CR 97, fig. 189).

The interference is the difference between the contact lines of the rollers and the raceways of the rail.

Preload class	Interference* [mm]	Rail type
K1	0.01	all
K2	0.03	T, U...18
	0.04	T, U...28
	0.05	T, U...35
	0.06	T, U, K...43, T, U, K...63

* Measured on the largest interior dimension between the raceways

Tab. 59

External preload

The unique design of the Compact Rail product family enables applying a partial external preload on selected locations along the entire guide.

An external preload can be applied by pressure along the side surfaces of the guide rail according to the drawing below (see fig. 136). This local preload results in higher rigidity only at the locations where it is necessary (e.g. on reversing points with high dynamic auxiliary forces).

This partial preload increases the service life of the linear guide by avoiding a continually increased preload over the entire length of the guide. Also the required drive force of the linear carriage in the non-preloaded areas is reduced.

The amount of the externally applied preload is determined using two dial indicators by measuring the deformation of the rail sides. These are deformed by thrust blocks with pressure screws. The external preload must be applied when the slider is not directly located in the pressure zone.

Size	A [mm]
18	40
28	55
35	75
43	80
63	120

Tab. 60

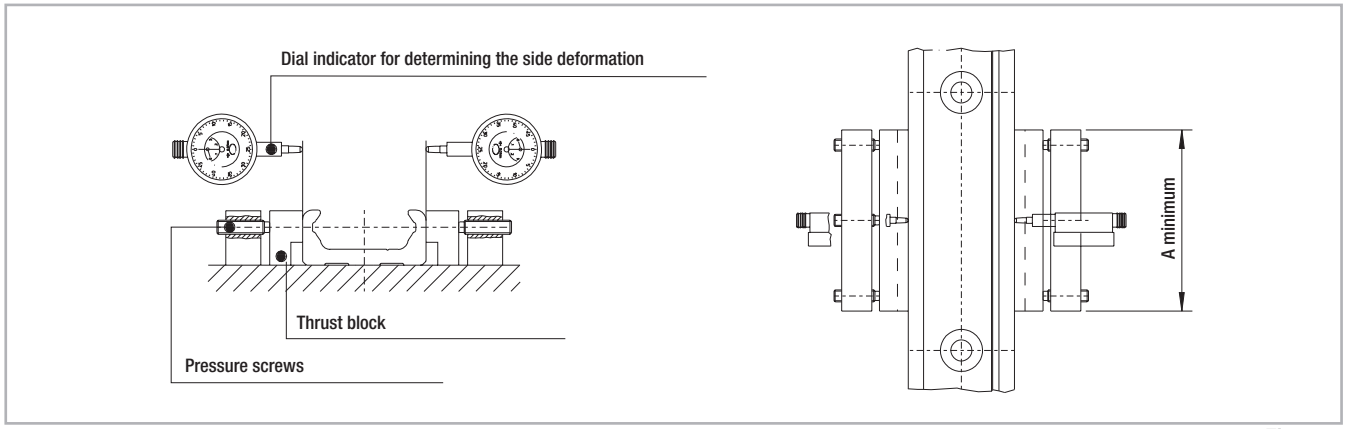

Fig. 136

The graph below indicates the value of the equivalent load as a function of the total deformation of both rail sides. The data relates to sliders with three rollers (see fig. 137).

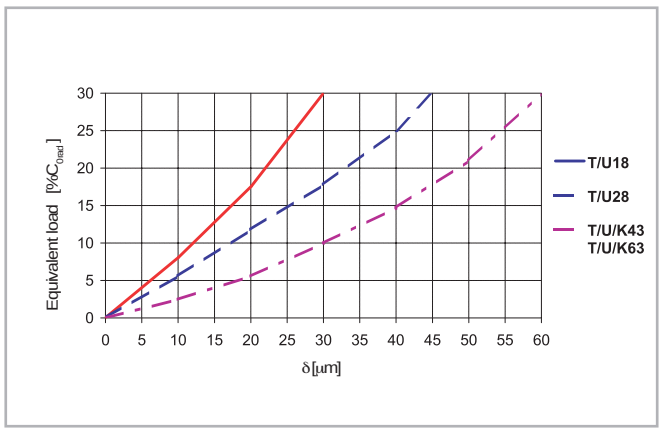

Fig. 137

Drive force

Frictional resistance

The drive force required for moving the slider is determined by the combined resistance of the rollers, wipers and seals.

The ground raceways and rollers have a minimal coefficient of friction, which remains almost the same in both the static and dynamic state. The wiper and longitudinal seals are designed for an optimum protection of the system, without a significant negative influence on the quality of motion. The overall friction of the Compact Rail also depends on external factors such as lubrication, preload and additional forces. Table 61 below contains the coefficients of friction for each slider type.



Fig. 138

Size	μ Roller friction	μ_w Wiper friction	μ_s Friction of longitudinal seals
18	0.003	$\frac{\ln (m \cdot 1000)^*}{0.98 \cdot m \cdot 1000}$	0.0015
28	0.003	$\frac{\ln (m \cdot 1000)^*}{0.06 \cdot m \cdot 1000}$	$\frac{\ln (m \cdot 1000)^*}{0.15 \cdot m \cdot 1000}$
35	0.005		
43	0.005		
63	0.006		

* Kilograms must be used for load m

Tab. 61

The values given in table 61 apply to external loads, which, with sliders with three rollers, are at least 10 % of the maximum load rating. For calculating the driving force for lower loads, please contact Rollon technical support.

Calculation of drive force

The minimum required drive force for the slider is determined with the coefficients of friction (see tab. 61) and the following formula (see fig. 139):

$$F = (\mu + \mu_w + \mu_s) \cdot m \cdot g$$

m = mass (kg)
g = 9.81 m/s²

Fig. 139

Example calculation:

If a NSW43 slider is used with a radial load of 100 kg, the result is μ = 0.005; from the formula the following is calculated:

$$\mu_s = \frac{\ln (100000)}{0.15 \cdot 100000} = 0.00076$$

$$\mu_w = \frac{\ln (100000)}{0.06 \cdot 100000} = 0.0019$$

Fig. 140

This is the minimum drive force for this example:

$$F = (0.005 + 0.0019 + 0.00076) \cdot 100 \cdot 9.81 = 7.51 \text{ N}$$

Fig. 141

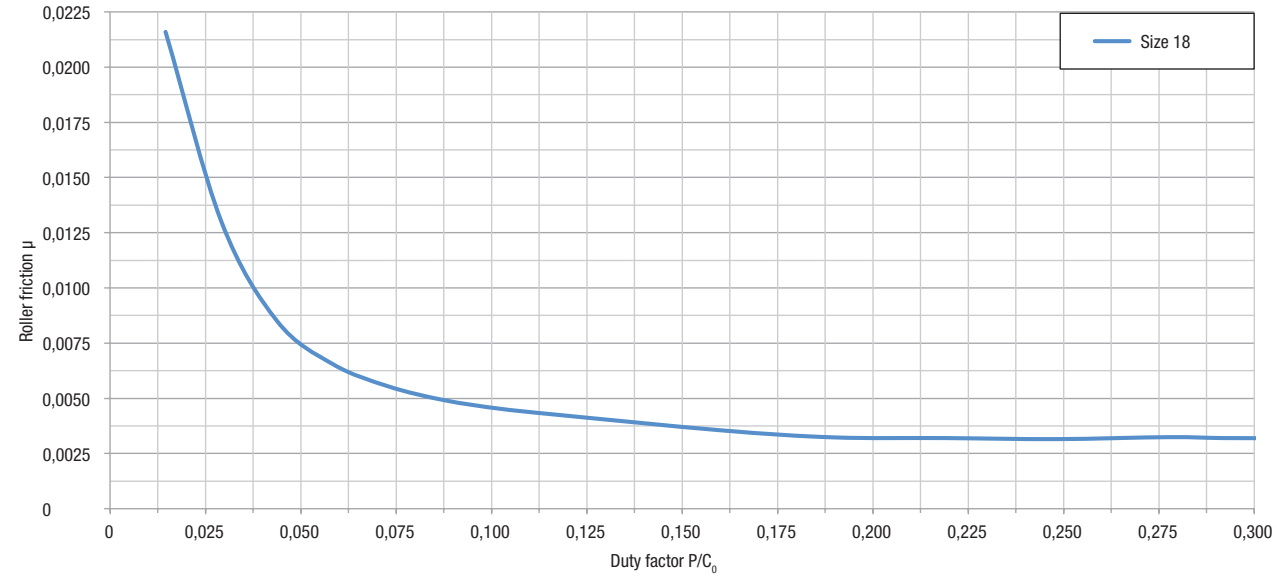
Size 18
Roller friction μ
0,0225
0,0200
0,0175
0,0150
0,0125
0,0100
0,0075
0,0050
0,0025
0
0
0,025
0,050
0,075
0,100
0,125
0,150
0,175
0,200
0,225
0,250
0,275
0,300
Duty factor P/C0

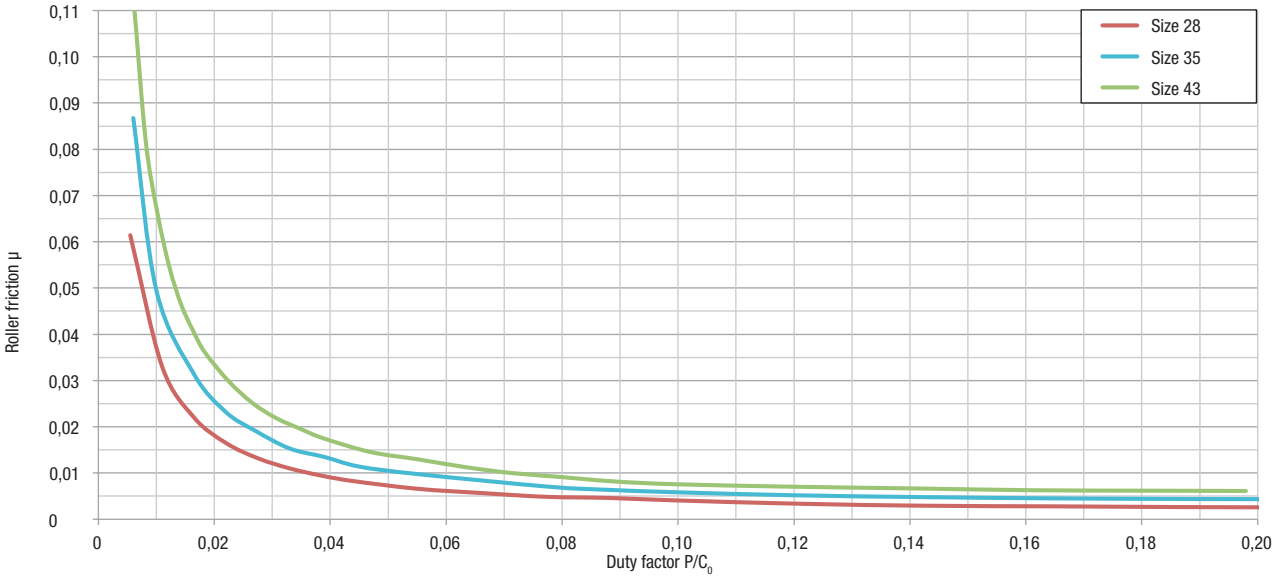
Size 28
Size 35
Size 43
Roller friction μ
0,11
0,10
0,09
0,08
0,07
0,06
0,05
0,04
0,03
0,02
0,01
0
0
0,02
0,04
0,06
0,08
0,10
0,12
0,14
0,16
0,18
0,20
Duty factor P/C0

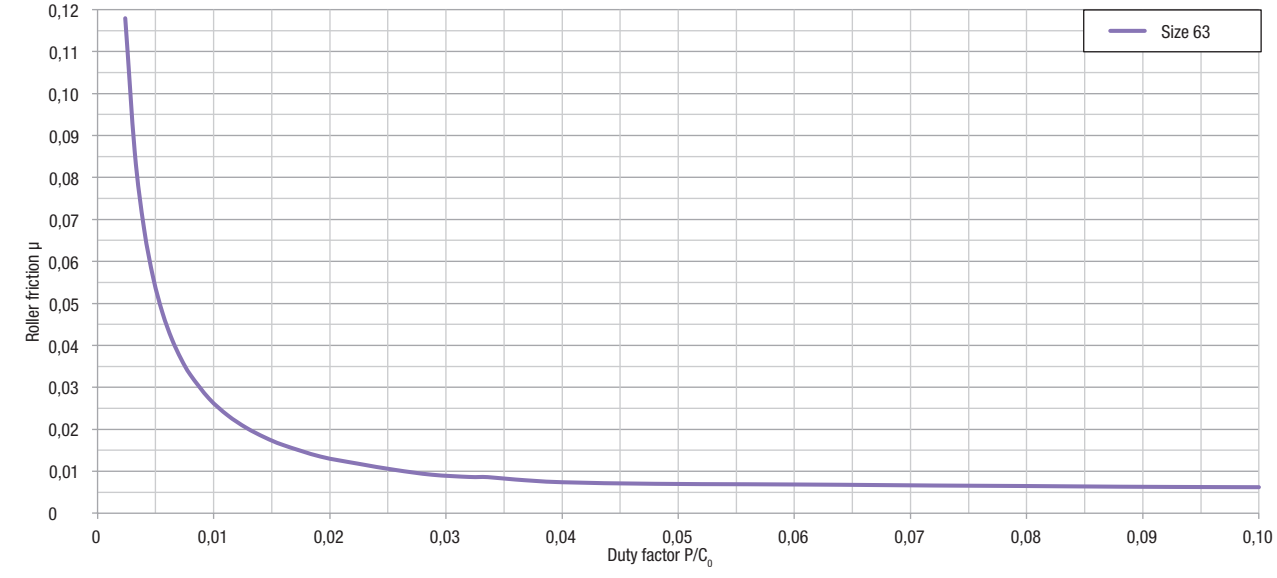
Size 63
Roller friction μ
0,12
0,11
0,10
0,09
0,08
0,07
0,06
0,05
0,04
0,03
0,02
0,01
0
0
0,01
0,02
0,03
0,04
0,05
0,06
0,07
0,08
0,09
0,10
Duty factor P/C0

Fig. 142

Lubrication

Roller pin lubrication

The bearings inside the rollers are lubricated for life. To reach the calculated service life (see pg. CR-98), a film of lubricant should always be present between the raceway and roller, this also serves to protect against corrosion of the ground raceways.

Lubrication of the raceways

Proper lubrication during normal conditions:

- reduces friction
- reduces wear
- reduces the load of the contact surfaces through elastic deformations
- reduces running noise

Slider lubrication

The sliders are equipped with wiper heads that include lubricated felts which slowly release oil on the raceways for a long time. The wiper heads can be recharged from the front through a dedicated access hole by means of an oiling syringe.

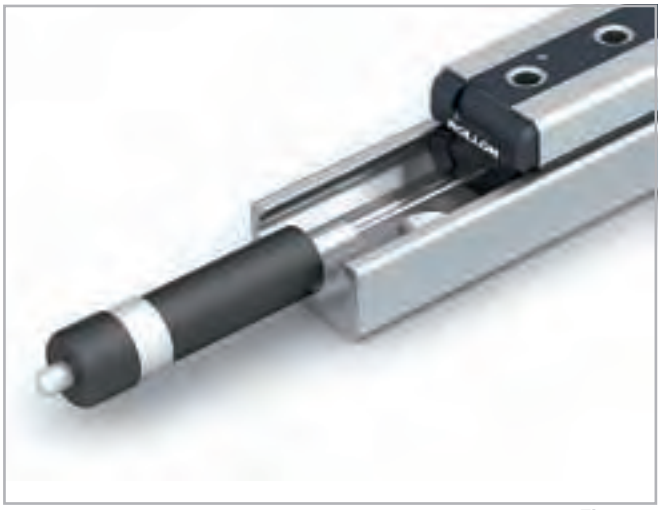

Fig. 143

Lubricant	Thickening agent	Temperature range [°C]	Kinematic viscosity 40°C [mm²/s]
Mineral oil	Lithium soap	-20... to +120	approx 110

Tab. 62

The durability of the lubrication delivered by the wiper heads depends on the conditions of use. In the normal clean indoor applications, it is suggested to refill the oil every 0.5 million of cycles, 1000 km or 1 year of use, based on the value reached first. In different conditions, it could be necessary to refill more often, depending on the level of environment criticity. In case of severe dust and dirt conditions, it is suggested to change the entire wiper head with a new one.

When refilling the oil or the substituting the wiper heads, it is recommended to clean the raceways of the guide.

Corrosion protection

All rails and slider bodies have a standard corrosion protection system by means of electrolytic-zinc plating according to ISO 2081. If increased corrosion protection is required, application-specific surface treatments are available upon request for rails and slider bodies e.g. approved nickel plated for use in the food industry. In this case, the chosen treatment must be specificed in the order for both rails and sliders using the appropriate code shown in the table below. For more information contact Rollon technical support.

Treatment	Characteristics
Zinc Plating ISO 2081	Standard treatment for all sizes of rails and slider bodies, it is ideal for indoor applications. When applied to the rail, it is removed from the raceways by the subsequent grinding process. Zinc-plated sliders are supplied with steel rollers.
Rollon Aloy (Y)	Electrolytic plating with high resistance passivation, ideal for outdoor applications. When applied to the rail, it is removed from the raceways by the subsequent grinding process. Sliders ordered with Rollon Aloy treatment are supplied with stainless steel rollers to further increase the corrosion resistance.
Rollon E-coating (K)	As zinc-plated version with additional electro painting that provides a fine black finishing to the entire rail. When applied to the rail, the slider can partially remove the coating from the raceways on the running contact point after a period of use. Sliders ordered with Rollon E-Coating are supplied with stainless steel rollers to further increase the corrosion resistance.
Nickel Plating (N)	Provides high resistance to chemical corrosion and is ideal for applications in medical or food related environments. When applied to the rail, raceways are coated too. Sliders ordered with Nickel Plating treatment are supplied with stainless steel rollers to further increase the corrosion resistance.

Tab. 63

Speed and acceleration

The Compact Rail product family is suitable for high operating speeds and accelerations.

Size	Speed [m/s]	Acceleration [m/s^2]
18	3	10
28	5	15
35	6	15
43	7	15
63	9	20

Tab. 64

Operating temperatures

The temperature range for continuous operation is: -20 °C / +120 °C with occasional peaks up to +150 °C.

Installation instructions

Fixing holes

V-holes with 90° bevels

The selection of rails with 90° countersunk holes is based on the precise alignment of the threaded holes for installation. Here the complex alignment of the rail to an external reference is omitted, since the rail aligns during installation by the self-centering of the countersunk screws on the existing hole pattern.

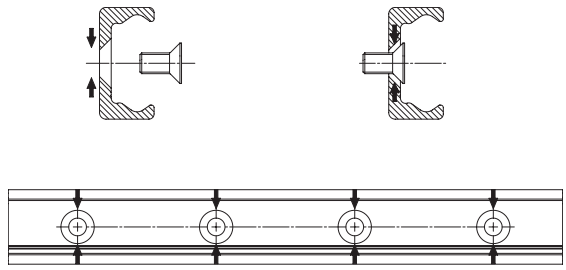

Fig. 144

C-holes with cylindrical counterbore

When a rail with counterbored holes is delivered, the Torx® screws are provided in the right quantity. The cylindrical screw has, as shown, some play in the countersunk fixing hole, so that an optimum alignment of the rail can be achieved during installation (see fig. 145).

The area T is the diameter of the possible offset, in which the screw center point can move during the precise alignment.

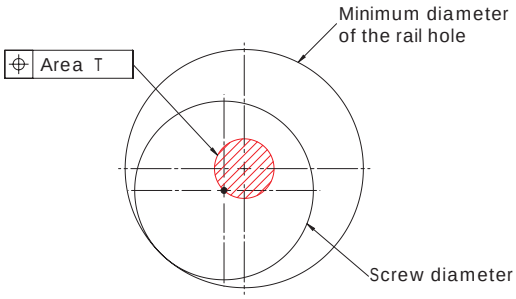

Fig. 145

Rail type	Area T [mm]
TLC18 - ULC18	∅ 1.0
TLC28 - ULC28	∅ 1.0
TLC35 - ULC35	∅ 1.5
TLC43 - ULC43 - KLC43	∅ 2.0
TLC63 - ULC63 - KLC63	∅ 0.5

Tab. 65

Chamfers

Chamfers must be realized for both C-holes and V-holes rails. The minimum chamfers on the fixing threads are listed on the table below.

Size	Chamfer C-holes [mm]	Chamfer V-holes [mm]
18	0.5 x 45°	0.5 x 45°
28	0.6 x 45°	1 x 45°
35	0.5 x 45°	1 x 45°
43	1 x 45°	1 x 45°
63	0.5 x 45°	1 x 45°

Tab. 66

Example for fixing with Torx® screws (custom design)

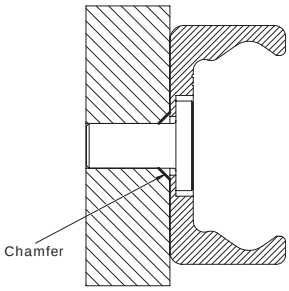

Example for fixing with countersunk screws

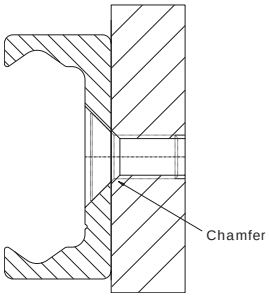

Fig. 146

Adjusting the sliders

Normally the linear guides are delivered as a system consisting of rail and adjusted sliders. If rail and slider are delivered separately or if the slider is installed in another raceway, the preload must be set again.

Setting the preload:

(1) Verify that the raceways are clean and take the wipers off to obtain a more sensitive feeling for correct preload setting.

(2) Insert the slider in the rail. Slightly loosen the fixing screws of the roller pins (no marking) to be adjusted.

(3) Position the slider on one end of the rail.

(4) For the U rails there must be a thin support (e.g. set key) under the ends of the slider body to ensure the horizontal alignment of the slider in the flat raceways.

(5) Insert the included special flat wrench from the side between the rail and the slider and slip it onto the hexagon of the eccentric roller to be adjusted.

(6) By turning the flat key clockwise, the roller to be adjusted is pressed against the upper track and the slider is then without play. Avoid a preload that is too high. It generates increased wear and reduces the service life.

(7) While holding the correct position of the roller with the adjustment key, the fixing screw can be carefully tightened. The exact tightening torque will be checked later (see fig. 147 and tab. 67).

(8) Move the slider in the rail and check the preload over the entire length of the rail. It should move easily and the slider should not have play at any location of the rail.

(9) For sliders with more than 3 rollers, repeat this process with each eccentric roller. Make sure that all rollers have even contact to the tracks.

(10) Now tighten the fixing screws with the specified tightening torque from the table while the flat key holds the angle adjustment of the pin. A special thread in the roller pin secures the set position.

(11) Ensure proper lubrication of the raceways.



Fig. 147

Slider size	Tightening torque [Nm]
18	3
28	7
35	7
43	12
63	35

Tab. 67

Use of radial ball bearing rollers

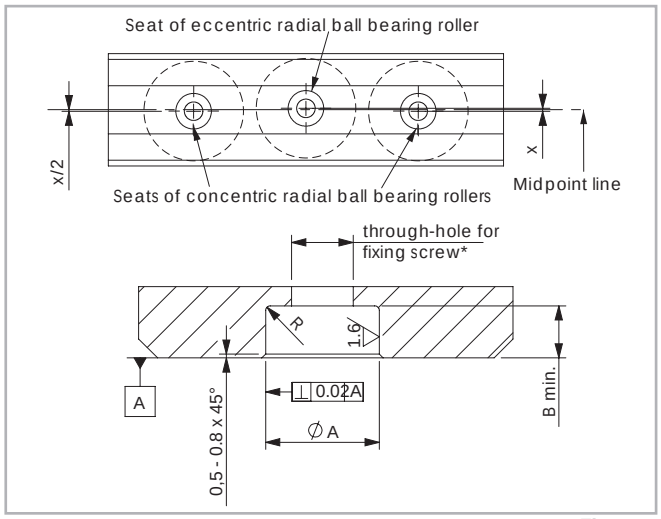

Fig. 148

If purchasing "Radial ball bearing rollers" to install on your own structure (see p. CR-64) we advise:

- Using a maximum of 2 concentric radial ball bearing rollers
- Offset the seats of the concentric radial ball bearing rollers with respect to those of the eccentric radial ball bearing rollers according to the table (tab. 68).

Slider size	X [mm]	Ø A [mm]	B min. [mm]	Radius R [mm]
18	0.30	6 + 0.025/+0.01	2.1	0.5
28	0.64	10 + 0.03/+0.01	4.0	0.5
35	0.90	12 + 0.05/+0.02	4.5	0.5
43	0.72	12 + 0.05/+0.02	5.5	1
63	0.55	18 + 0.02/-0.02	7	1

Tab. 68

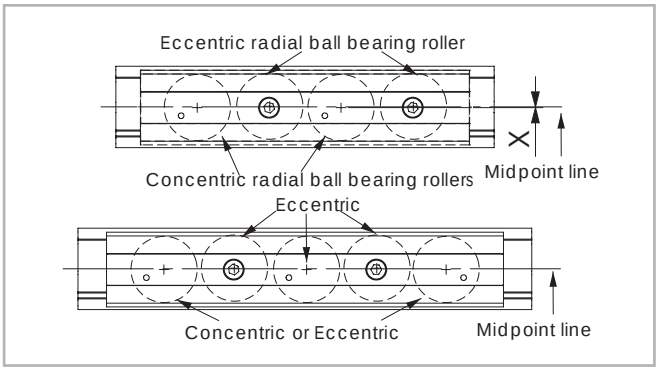

Fig. 149

Installing the single rail

The T- and K-rails can be installed in two positions relative to the external force. For axial loading of the slider (fig. 150. pos. 2), the load capacity is reduced because of the decline in contact area caused by the change in position. Therefore, the rails should be installed in such a way that the load on the rollers acts in the radial direction (fig. 150, pos. 1). The number of fixing holes in the rail in combination with screws of property class 10.9 is dimensioned in accordance with the load capacity values. For critical applications with vibrations or higher demand for rigidity, a support of the rail (fig. 150, pos. 3) is advantageous.

This reduces deformation of the sides and the load on the screws. The installation of a rail with countersunk holes requires an external reference for alignment. This reference can also be used simultaneously as rail support if required. All information in this section on alignment of the rails, refers to rails with counterbored holes. Rails with countersunk holes self-align using the specified fixing hole pattern (see pg. CR-81, fig. 144).

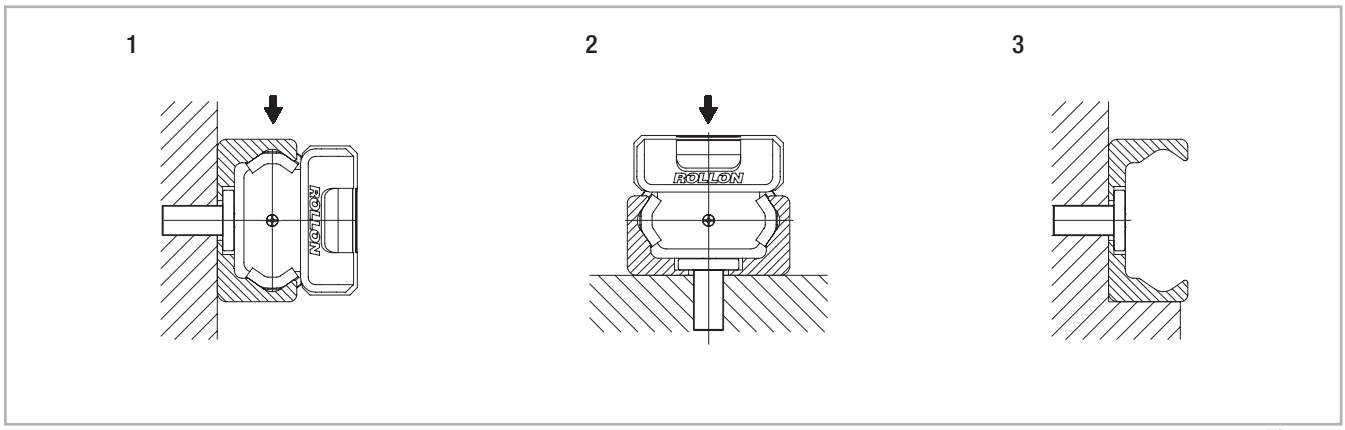

Fig. 150

Rail installation with reference surface as support

(1) Remove unevenness, burrs and dirt from the support surface.

(2) Press the rail against the support surface and insert all screws without tightening them.

(3) Start tightening the fixing screws to the specified torque on one end of the rail while continuing to hold pressure on the rail against the support surface.

Screw type	Torx® tightening torque [Nm]	Countersunk tightening torque [Nm]
M4 (T..., U... 18)	3	3
M5 (T..., U... 28)	9	6
M6 (T..., U... 35)	12	10
M8 (T..., U..., K... 43)	22	25
M8 (T..., U..., K... 63)	35	30

Tab. 69

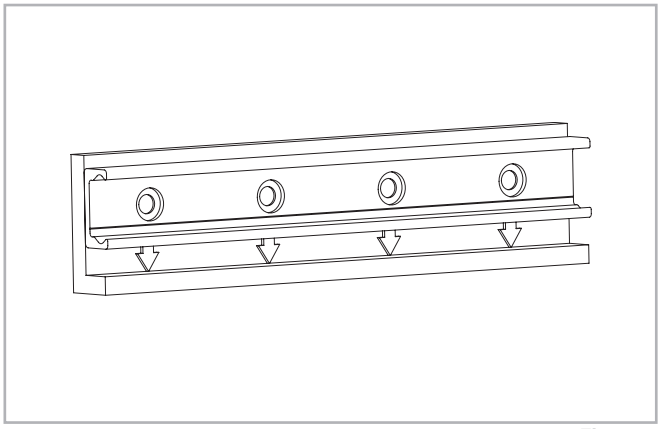

Fig. 151

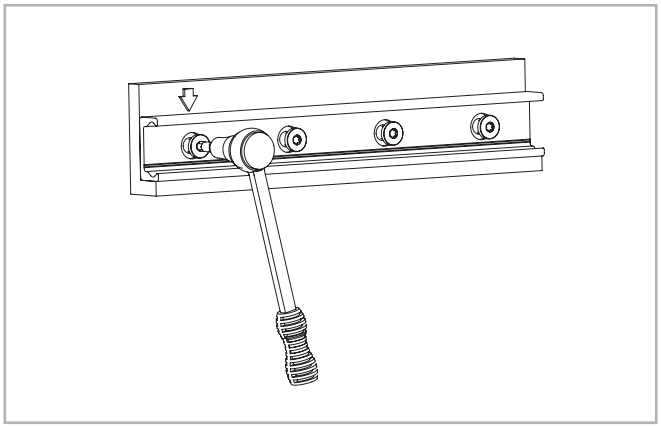

Fig. 152

Rail installation without support

(1) Carefully lay the guide rail with installed slider on the mounting surface and slightly tighten the fixing screws so that the guide rail lightly touches the mounting surface.

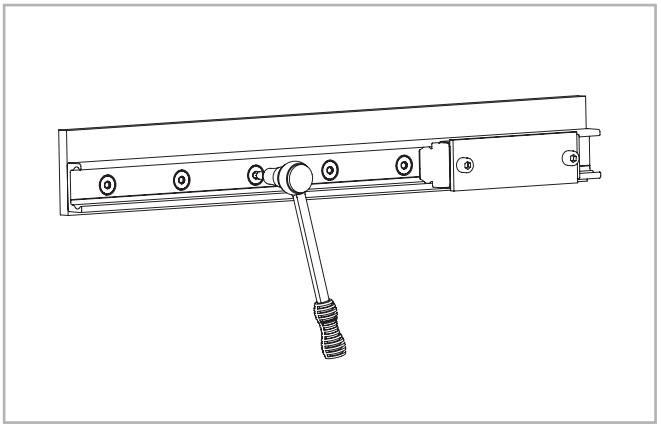

Fig. 153

(2) Install a dial indicator so that the offset of the rail to a reference line can be measured. Now position the slider in the center of the rail and set the dial indicator to zero. Move the slider back and forth between each two hole spacings and carefully align the rail. Fasten the three center screws of this area now with the the specified tightening torque, see fig. 154.
(3) Now position the slider on one end of the rail and carefully align the rail to zero on the dial indicator.

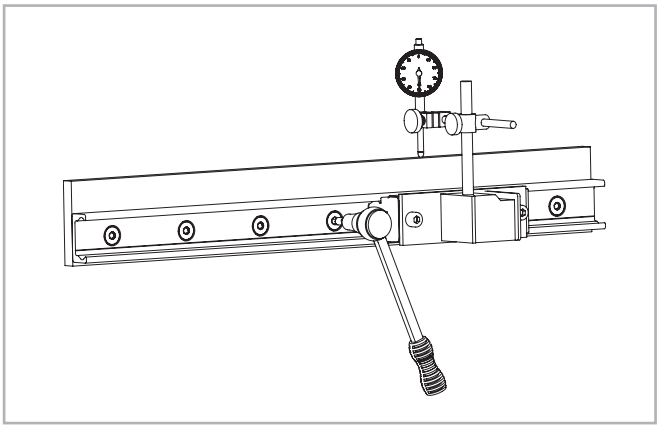

Fig. 154

(4) Begin to tighten the screws as specified while moving the slider together with the dial indicator. Make sure that it does not show any significant deflection. Repeat this procedure from the other end of the rail.

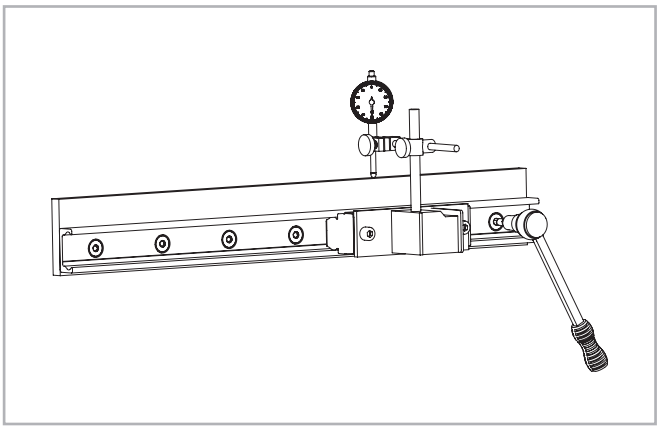

Fig. 155

Parallel installation of two rails

If two T-rails or a T+U-system are installed, the height difference of the two rails must not exceed a certain value (obtainable from the table below) in order to ensure proper guiding. These maximum values result from the maximum allowable twisting angle of the rollers in the raceways (see tab. 70). These values account for a load capacity reduction of 30% on the T-rail and must absolutely be maintained in every case.

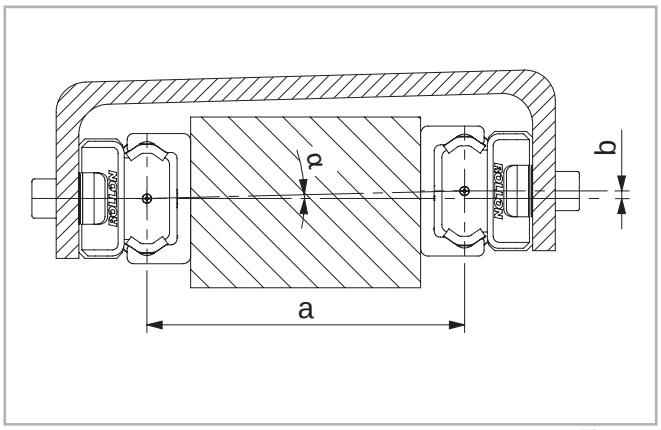

Fig. 156

Size	α
18	1 mrad (0.057°)
28	2.5 mrad (0.143°)
35	2.6 mrad (0.149°)
43	3 mrad (0.171°)
63	5 mrad (0.286°)

Tab. 70

Example:
NSW43: if a = 500 mm; b= a*tanα = 1.5 mm

When using two T-rails, the maximum parallelism deviation must not be exceeded (see tab. 71). Otherwise stresses can occur, which can result in a reduction in load capacity and service life.

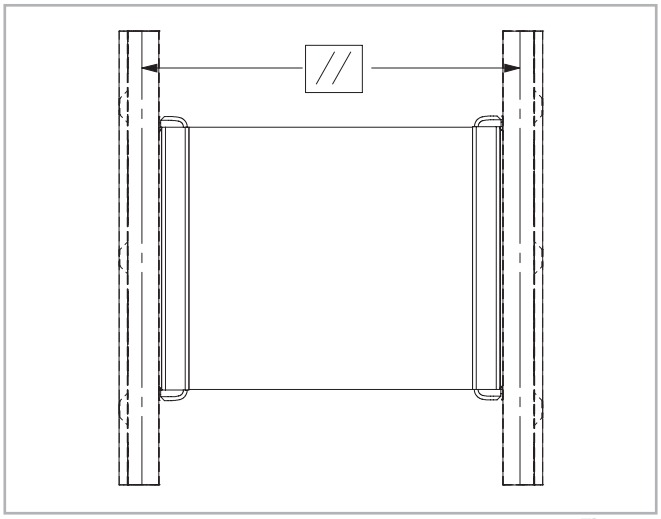

Fig. 157

Rail size	K1	K2
18	0.03	0.02
28	0.04	0.03
35	0.04	0.03
43	0.05	0.04
63	0.06	0.05

Tab. 71

Note: For parallelism problems, it is recommended to use a T+U or K+U system, since these combinations compensate for inaccuracies (see pg. CR-70 and following).

Parallel installation of two T-rails

(1) Clean chips and dirt from the prepared mounting surfaces and fasten the first rail as described in the section on installation of a single rail.
(2) Fasten the second rail on the ends and the center. Tighten the screws in Position A and measure the distance between the raceways of the two rails.

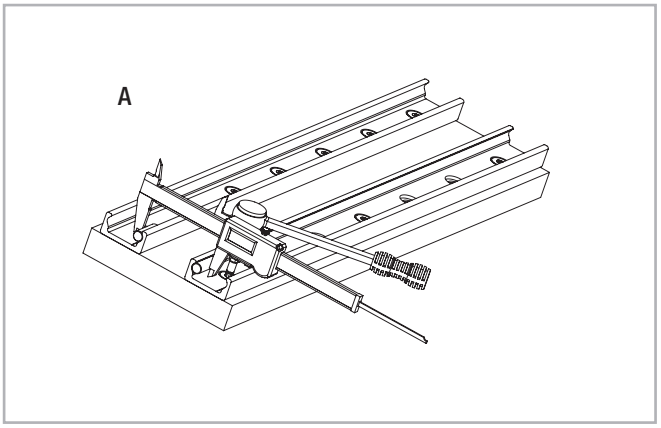

Fig. 158

(3) Fasten the rail in Position B so that the distance between the raceways does not exceed the measured values in Position A while maintaining the tolerances (see pg. CR-85, tab. 71) for parallel rail installation.

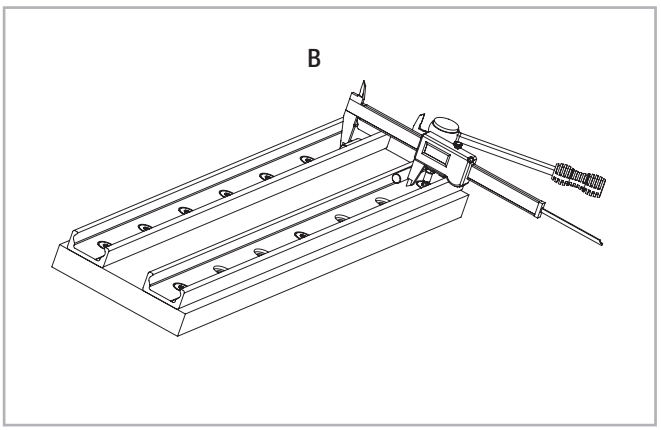

Fig. 159

(4) Fasten the screw in Position C so that the distance of the raceways is as close to an average between the two values from A and B as possible.
(5) Fasten all other screws and check the specified tightening torque of all fixing screws (see pg. CR-85, tab. 69).

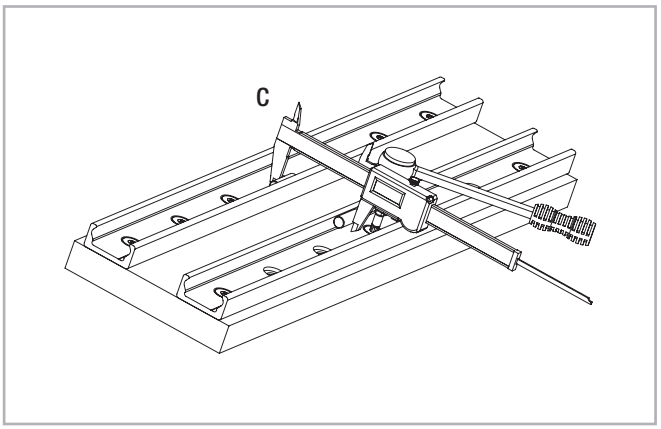

Fig. 160

Installation of the T+U- or the K+U-system

When using a two-track parallel linear guide we recommend the use of a fixed bearing / compensating bearing system: The combination of T+U-rails for compensation of deviations in parallelism or the K+U-system to compensate for deviations in parallelism in two planes.

Installation steps

(1) For a fixed bearing / compensating bearing system the fixed bearing rail is always installed first. This is then used as a reference for the compensating bearing rail.
Then proceed as described in the section on installation of a single rail (see pg. CR-85).
(2) Install the compensating bearing rail and only tighten the fixing screws slightly.
(3) Insert the sliders in the rails and install the element to be moved, without tightening its screws.
(4) Insert the element in the center of the rails and tighten it, use screws class 10.9.

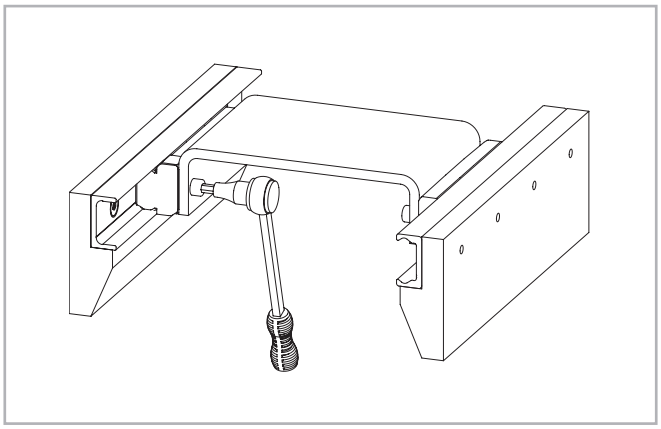

Fig. 161

(5) Tighten the center rail fixing screws to the specified torque (see pg.CR-83, tab. 69).

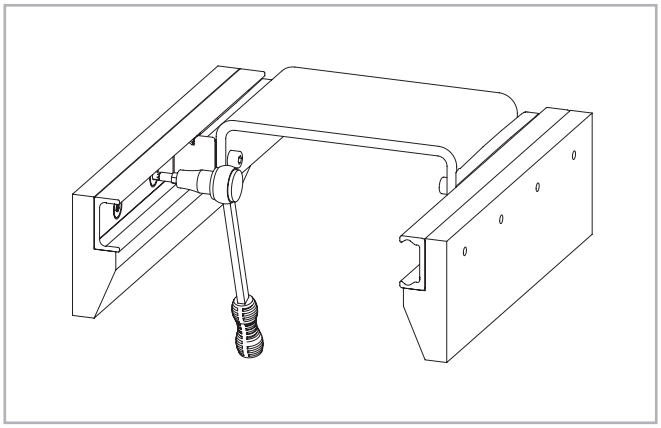

Fig. 162

(6) Move the element to one end of the rail and start tightening the rest of the screws in the direction away from the slider.

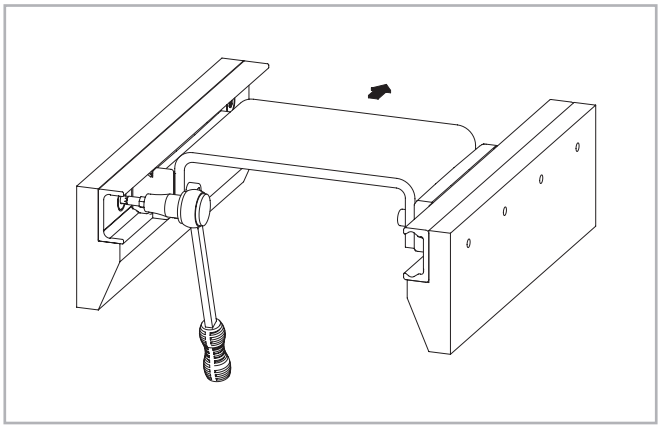

Fig. 163

Joined Rails

If long guide rails are required, two or more rails can be joined to the desired length. When putting guide rails together, be sure that the register marks shown in fig. 164 are positioned correctly.

For applications with parallel joined guide rails we suggest them to fe fabricated asymmetric.

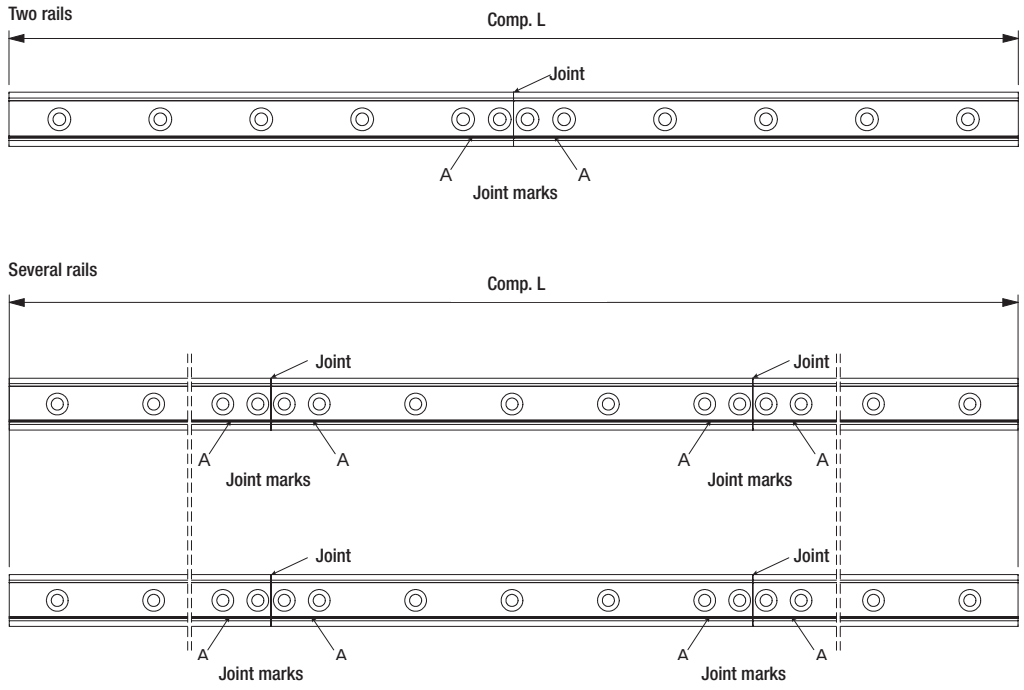

Fig. 164

General information

The maximum available rail length in one piece is indicated in table 38 on page CR-55. Longer lengths are achieved by joining two or more rails (joined rails).

Rollon then machines the rail ends at a right angle to the impact surfaces and marks them. Additional fixing screws are included with the delivery, which ensure a problem-free transition of the slider over the joints, if the following installation procedures are followed. Two additional threaded holes (see fig. 165) are required in the load-bearing structure. The included end fixing screws correspond to the installation screws for the rails for cylindrical counterbores (see pg. CR-81).

The alignment fixture for aligning the rail joint can be ordered using the designation given in the table (see pg. CR-65, tab. 46 and 47).

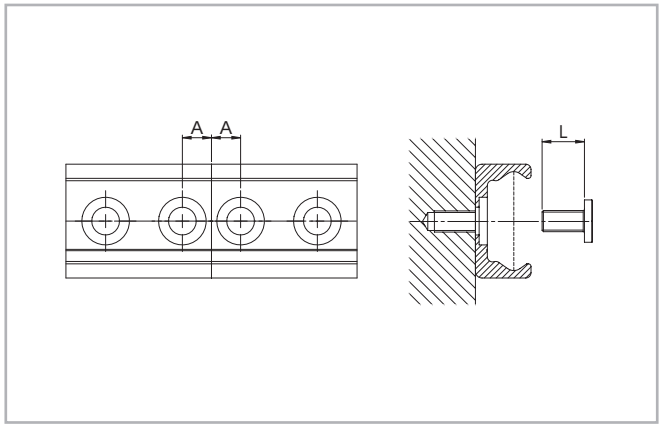

Fig. 165

Rail type	A [mm]	Threaded hole (load-bearing structure)	Screw type	L [mm]	Alignment fixture
T..., U...18	7	M4	see pg. CR-68	8	AT18
T..., U...28	8	M5		10	AT28
T..., U...35	10	M6		13	AT35
T..., U...43	11	M8		16	AT43
T..., U...63	8	M8		20	AT63
K...43	11	M8		16	AK43
K...63	8	M8		20	AK63

Tab. 72

Installation of joined rails

After the fixing holes for the rails are made in the load-bearing structure, the joined rails can be installed according to the following procedure:
(1) Fix the individual rails on the mounting surface by tightening all screws except for each last one on the rail joint.
(2) Install the end fixing screws without tightening them (see fig. 166).

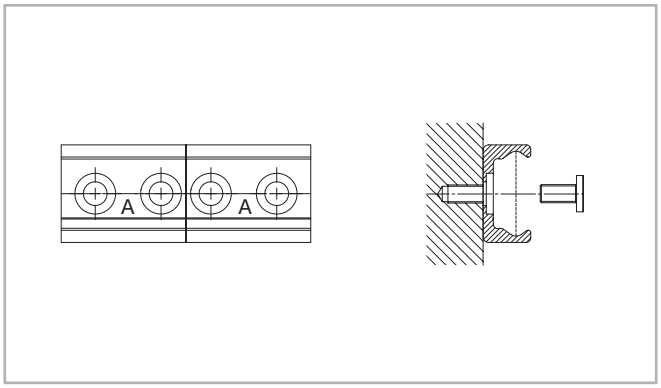

Fig. 166

(3) Place the alignment fixture on the rail joint and tighten both set screws uniformly, until the raceways are aligned (see fig. 167).
(4) After the previous step (3) it must be checked if both rail backs lie evenly on the mounting surface. If a gap has formed there, this must be shimmed.

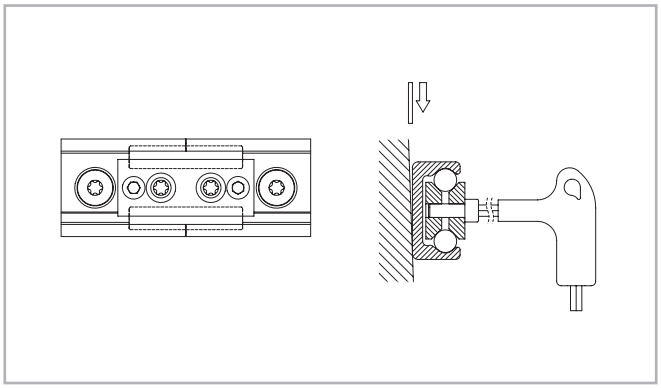

Fig. 167

(5) The bottom of the rails should be supported in the area of the transition. Here a possible existing gap must be looked for, which must be closed for correct support of the rail ends by shims.

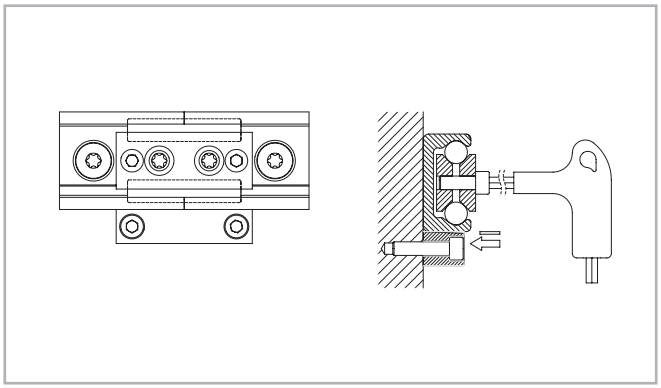

Fig. 168

(6) Insert the key through the holes in the alignment fixture and tighten the screws on the rail ends.
(7) For rails with 90° countersunk holes, tighten the remaining screws starting from the rail joint in the direction of the rail center. For rails with cylindrical counter-sunk holes, first adjust the rail to an external reference, then proceed as described above.
(8) Remove the alignment fixture from the rail.

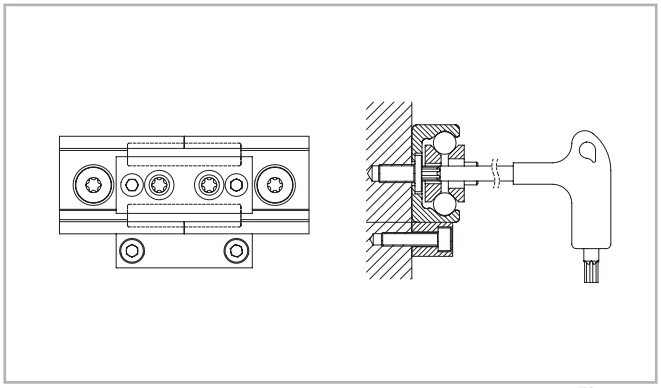

Fig. 169

Ordering key

Rail / slider system

TLC	4560	/2/	NSW	28	-4	B	-2Z	-N
								Expanded surface protection if deviation from Standard ISO 2081 *see pg. CR-82, tab.63*
							Roller seal *see pg. CR-64*	
						Configuration *depending on type of slider see pgs. CR-56 and CR-58*		
					Number of rollers *see pg. CR-56 and CR-58*			
				Size *see pg. CR-56 and CR-58*				
			Slider type *see pg. CR-56 and CR-58*					
		Number of sliders in one rail						
	Rail length in mm *see pg. CR-55, tab. 38*							
Rail type *see pg. CR-55, tab. 37*								

Ordering example: TLC-04560/2/NSW28-4B-2Z-N

Rail composition: 1x3280+1x1280 (only for joint processed rails)

Hole pattern: 40-40x80-40//40-15x80-40 (please always specify the hole pattern separately)

Notes on ordering: The rail length codes are always 5 digits, the slider length codes are always 3 digits; use zeroes as a prefix when lengths are shorter

Rail

TLV	-43	-5680	-N
			Expanded surface protection if deviation from Standard ISO 2081 *see pg. CR-80, tab.63*
		Rail length in mm *see pg. CR-55, tab. 38*	
	Size *see pg. CR-55, tab. 37*		
Rail type *see pg. CR-55, tab. 37*			

Ordering example: TLV-43-05680-N

Rail composition: 1x880+2x2400 (only for joint processed rails)

Hole pattern: 40-10x80-40//40-29x80-40//40-29x80-40 (please always specify the hole pattern separately)

Notes on ordering: The rail length codes are always 5 digits; use zeroes as a prefix when lengths are shorter

Slider

NSW	28	-4	B	-2RS	-N
					Expanded surface protection if deviation from Standard ISO 2081 *see pg. CR-80, tab.63*
				Roller seal *see pg. CR-64*	
			Configuration *depending on type of slider* *see pgs. CR-56 and CR-58*		
		Number of rollers *see pg. CR-56 and CR-58*			
	Size *see pg. CR-56 and CR-58*				
Slider type *see pg. CR-56 and CR-58*					

Ordering example: NSW28-4B-2RS-N

Notes on ordering: The slider length codes are always 3 digits; use zeroes as a prefix when lengths are shorter

Wipers

ZK-WNS	28
	Size *see pg. CR-56 and CR-58*
Wiper type *see pg. CR-65, fig. 117*	

Ordering example: ZK-WNS28

Note on orderling: every kit contains a pair of wipers. Two wipers per slider are always required.

Calculation formulas

Static load

The radial load capacity rating, C_{0rad} the axial load capacity rating C_{0ax}, and moments M_x, M_y, M_z indicate the maximum permissible values of the load (see from pg. CR-8 to CR-10 and CR-52, CR-53), higher loads will have a detrimental effect on the running quality. A safety factor, S_0, is used to check the static load, which takes into account the basic parameters of the application and is defined more in detail in the following table:

Safety factor S_0

No shock nor vibration, smooth and low-frequency reverse, high assembly accuracy, no elastic deformations	1 - 1.5
Normal installation conditions	1.5 - 2
Shock and vibration, high-frequency reverse, significant elastic deformation	2 - 3.5

Fig. 170

The ratio of the actual load to maximum permissible load may be as large as the reciprocal of the accepted safety factor, S_0, at the most.

$$\frac{P_{0rad}}{C_{0rad}} \leq \frac{1}{S_0} \qquad \frac{P_{0ax}}{C_{0ax}} \leq \frac{1}{S_0} \qquad \frac{M_1}{M_x} \leq \frac{1}{S_0} \qquad \frac{M_2}{M_y} \leq \frac{1}{S_0} \qquad \frac{M_3}{M_z} \leq \frac{1}{S_0}$$

Fig. 171

The above formulas are valid for a single load case.
If two or more forces are acting simultaneously, please check the following formula:

$$\frac{P_{0rad}}{C_{0rad}} + \frac{P_{0ax}}{C_{0ax}} + \frac{M_1}{M_x} + \frac{M_2}{M_y} + \frac{M_3}{M_z} + y \leq \frac{1}{S_0}$$

P_{0rad} = effective radial load (N)
C_{0rad} = permissible radial load (N)
P_{0ax} = effective axial load (N)
C_{0ax} = permissible axial load (N)
M_1, M_2, M_3 = external moments (Nm)
M_x, M_y, M_z = maximum permissible moments in the different loading directions (Nm)
y = reduction due to preload (see pg. CR-29, Tab. 20 or pg. CR-75, Tab. 58)

Fig. 172

The safety factor S_0 can lie on the lower given limit if the occurring forces can be determined with sufficient precision. If shock and vibration are present, the higher value should be selected. For dynamic applications higher safety is required. Please contact Rollon technical support.

Slider load

Examples of formulas for determining the forces on the most heavily loaded slider

For an explanation of the parameters in the formulas see pg. CR-96, fig. 187

Horizontal movement

Static test

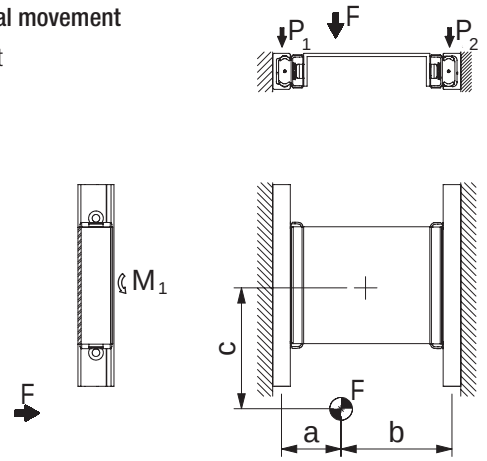

Fig. 173

Slider load:

$$P_1 = F \cdot \frac{b}{a+b}$$

$$P_2 = F - P_1$$

in addition each slider is loaded by a moment:

$$M_1 = \frac{F}{2} \cdot c$$

Fig. 176

Horizontal movement

Static test

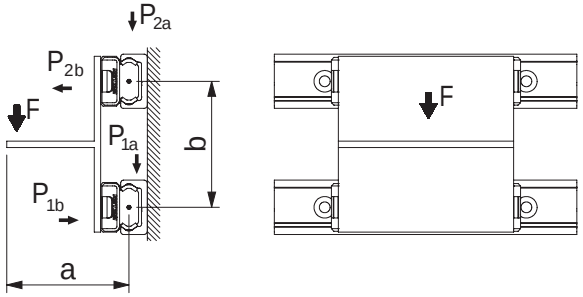

Fig. 174

Slider load:

$$P_{1a} \cong P_{2a} = \frac{F}{2}$$

$$P_{2b} \cong P_{1b} = F \cdot \frac{a}{b}$$

Fig. 177

Horizontal movement

Static test

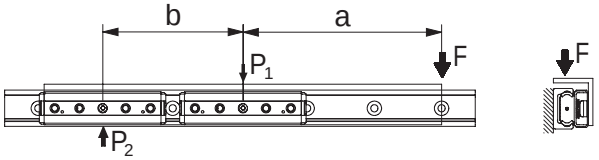

Fig. 175

Slider load:

$$P_2 = F \cdot \frac{a}{b}$$

$$P_1 = P_2 + F$$

Fig. 178

Note: Applies only if the distance between centers of the sliders b > 2x slider length

Horizontal movement

Static test

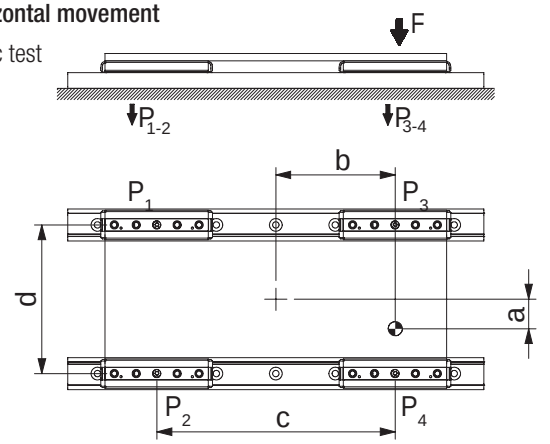

Fig. 179

Note: It is defined that slider no. 4 is always located closest to the point where the force is applied.

Slider load:

$$P_1 = \frac{F}{4} - \left(\frac{F}{2} \cdot \frac{b}{c}\right) - \left(\frac{F}{2} \cdot \frac{a}{d}\right)$$

$$P_2 = \frac{F}{4} - \left(\frac{F}{2} \cdot \frac{b}{c}\right) + \left(\frac{F}{2} \cdot \frac{a}{d}\right)$$

$$P_3 = \frac{F}{4} + \left(\frac{F}{2} \cdot \frac{b}{c}\right) - \left(\frac{F}{2} \cdot \frac{a}{d}\right)$$

$$P_4 = \frac{F}{4} + \left(\frac{F}{2} \cdot \frac{b}{c}\right) + \left(\frac{F}{2} \cdot \frac{a}{d}\right)$$

Fig. 182

Vertical movement

Static test

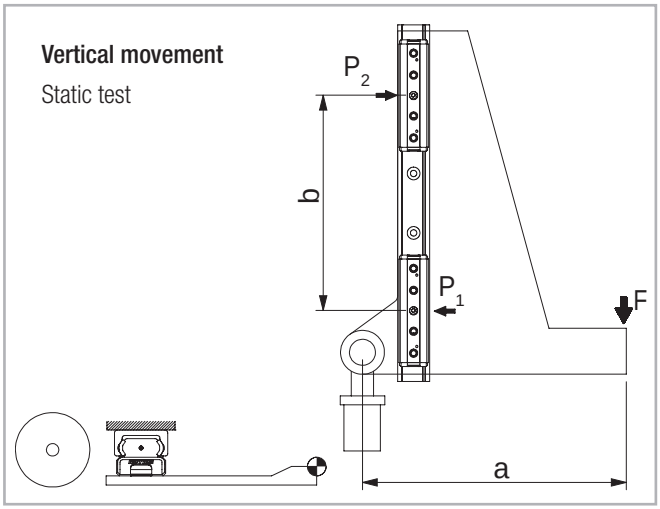

Fig. 180

Slider load:

$$P_1 \cong P_2 = F \cdot \frac{a}{b}$$

Fig. 183

Note: Applies only if the distance between centers of the sliders b > 2x slider length

Horizontal movement

Static test

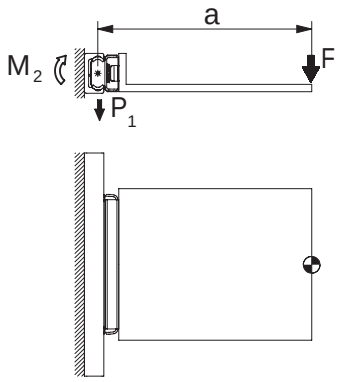

Fig. 181

Slider load:

$$P_1 = F$$

$$M_2 = F \cdot a$$

Fig. 184

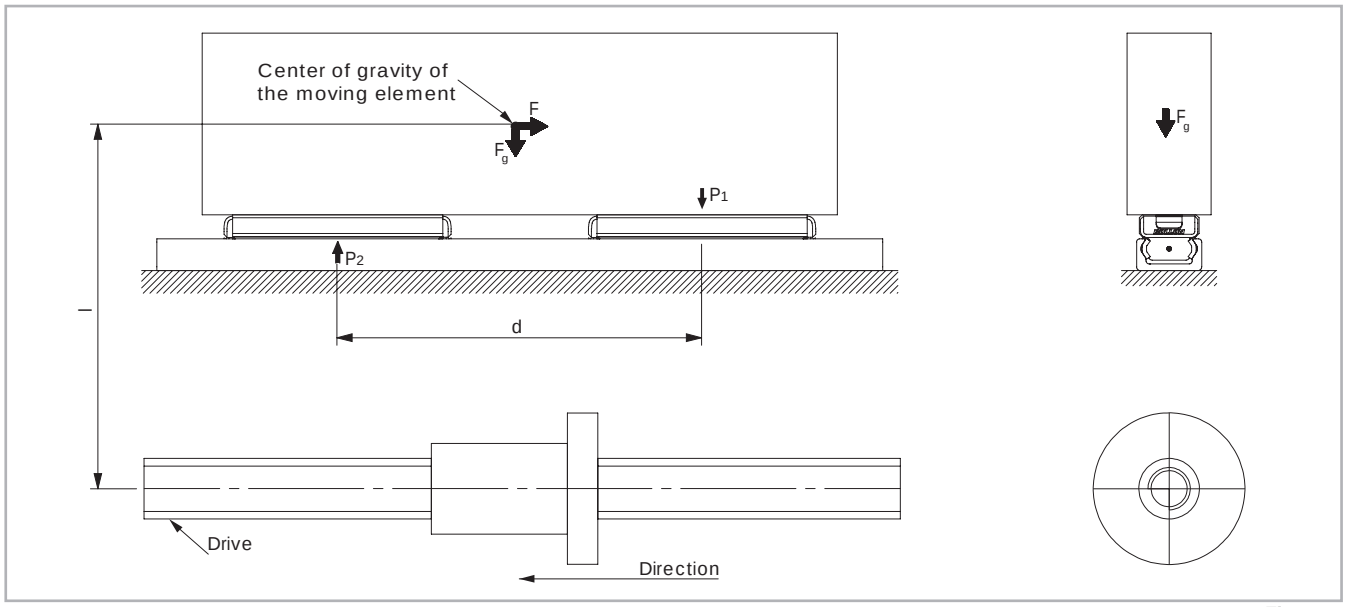

Fig. 185

Horizontal movement

Test with a moving element of the weight-force F_g at the instant the direction of movement changes

Inertial force

$$F = m \cdot a$$

Slider load at time of reverse

$$P_1 = \frac{F \cdot l}{d} + \frac{F_g}{2}$$

$$P_2 = \frac{F_g}{2} - \frac{F \cdot l}{d}$$

Fig. 186

Explanation of the calculation formula

F	=	effective force (N)
F_g	=	weight-force (N)
P_1, P_2, P_3, P_4	=	effective load on the slider (N)
M_1, M_2	=	effective moment (Nm)
m	=	mass (kg)
a	=	acceleration (m/s²)

Fig. 187

Service life

The dynamic load capacity C is a conventional variable used for calculating the service life. This load corresponds to a nominal service life of 100 km. For values of the individual slider see from pg. CR-8 to CR-10 and CR-54, CR-55. The following formula (see fig. 188) links the calculated theoretical service life to the dynamic load capacity and the equivalent load:

$$L_{Km} = 100 \cdot \left(\frac{C}{P} \cdot \frac{f_c}{f_i} \cdot f_h\right)^3$$

L_{km} = theoretical service life (km)
C = dynamic load capacity (N)
P = effective equivalent load (N)
f_c = contact factor
f_i = application coefficient
f_h = stroke factor

Fig. 188

The equivalent load P corresponds in its effects to the sum of the forces and moments working simultaneously on a slider. If these different load components are known, P results as follows:

$$P = P_r + \left(\frac{P_a}{C_{0ax}} + \frac{M_1}{M_x} + \frac{M_2}{M_y} + \frac{M_3}{M_z} + y\right) \cdot C_{0rad}$$

y = reduction due to preload
(see pg. CR-29, Tab. 20 or pg. CR-75, Tab. 58)

Fig. 189

Here the external loads are assumed as constant in time. Brief loads, which do not exceed the maximum load capacities, do not have any relevant effect on the service life and can therefore be neglected.
The contact factor f_c refers to applications in which several sliders pass the same rail section. If two or more sliders move over the same point of a rail, the contact factor according to table 73 to be taken into account in the formula for calculation of the service life.

Number of sliders	1	2	3	4
f_c	1	0.8	0.7	0.63

Tab. 73

The application coefficient f_i takes into account the operational conditions in the service life calculation. It has a similar significance to the safety factor S_0 in the static load test. It is calculated as described in the following table:

f_i	
Neither shocks nor vibrations, smooth and low-frequency direction change; clean operating conditions; low speeds (<1 m/s)	1 - 1.5
Slight vibrations, average speeds (1 - 2.5 m/s) and average frequency of direction change	1.5 - 2
Shocks and vibrations, high speeds (> 2.5 m/s) and high-frequency direction change; extreme dirt contamination	2 - 3.5

Tab. 74

The stroke factor f_h takes into account the higher load of the raceways and rollers during short strokes on the same total length of run. The corresponding values are taken from the following graph (for strokes longer than 1 m, f_h =1):

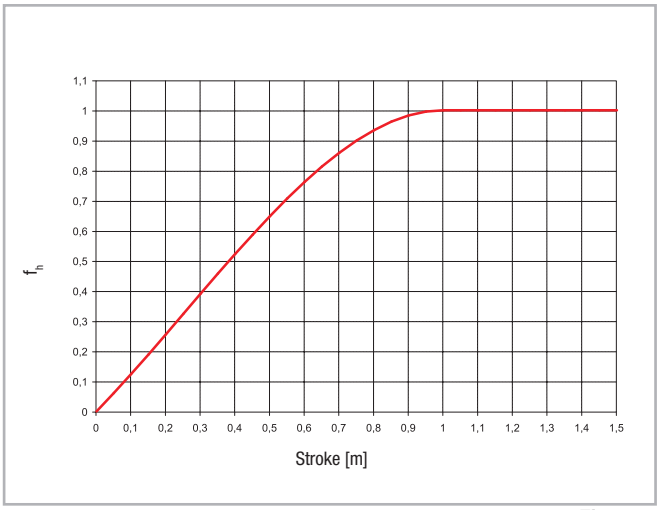

Fig. 190

Notes

ROLLON®
BY TIMKEN

X-Rail



Product explanation

X-Rail: linear bearings in stainless steel, zinc-plated steel or hardened steel with Rollon-Nox process.



Fig. 1

X-Rail is the product family of roller embossed guide rails for applications in which an economical price to performance ratio and high corrosion resistance are required.

X-Rail linear guides features a rolled C-profile (0 degrees of axial play) or U-profile (1 degree of axial play) and are available in three versions: stainless steel (TEX/UEX), zinc-plated steel (TES/UES) or hardened with Rollon-Nox patented process (TEN/UEN).

Sizes range from 20 to 45 mm depending on the material of the guide and the type of profile. Every option features dedicated sliders, with compact or solid body.

The most important characteristics:

- Corrosion resistant, FDA/USDA compliant materials
- Compensates for deviations in mounting structure parallelism
- Optimal reliability in dirty environments thanks to internal raceways
- Wide range of operating temperature
- Easy adjustment of sliders

Preferred areas of application of the X-Rail product family:

- Construction and machine technology
  (e.g., safety doors, washing bay accessories)
- Medical technology
  (e.g., hospital accessories, medical equipment)
- Transport (e.g., rail transport, naval, automotive industry)
- Food and beverage industry (e.g., packaging, food processing)
- Building technology
- Energy technology (e.g., industrial furnaces, boilers)

TEX/UEX series

TEX/UEX linear guides, with their CEX/CEXU sliders and rollers, are made of stainless steel. They offer a simple and practical solution for all applications where high corrosion resistance is required, in particular for food industry, chemical, pharmaceutical and medical industries.
For applications in severe marine environments is proposed the version with all parts electro polished (X-version) for extra high corrosion resistances. The product is easily washable for applications subject to frequent cleaning.



Fig. 2

TES/UES series

TES/UES linear guides with their CES/CESU sliders are made of zinc-plated. They offer a simple and economical solution for a wide range applications, where high frequency is not required.
The compact overall dimensions the internal protected raceways, the ease of assembly and the good ratio of load capacity /size make this product a winning choice compared to other self-built or available solutions on the market.



Fig. 3

TEN/UEN series

TEN/UEN linear guides, with their CEN/CEP sliders, are made of hardened steel. The Rollon-Nox hardening process provides the guide long life and resistance to wear, in addition to a black surface resistant to flame and abrasion.
Additional treatments are available for applications where an higher resistance to corrosion or a particular attention to design are required (see p. XR-19).



Fig. 4

System (T+U-System)

The T guide with shaped raceways (fixed rail) is used for the main load bearing in radial and axial forces. The U guide with flat raceways (compensating rail) is used for load bearing of radial forces and, in combination with fixed bearing rail, as support bearings for occurring moment loads. A pair of T and U-rail used together offers compensation for deviations in parallelism and tolerances in the mounting structure.



Fig. 5

Rollers

Concentric and eccentric radial ball bearings made of stainless or roller bearing steel are available for each slider. Roller sealing is dependent on the material: 2RS rubber seals or 2Z steel shields. All rollers are lubricated for life.



Fig. 6

Technical data

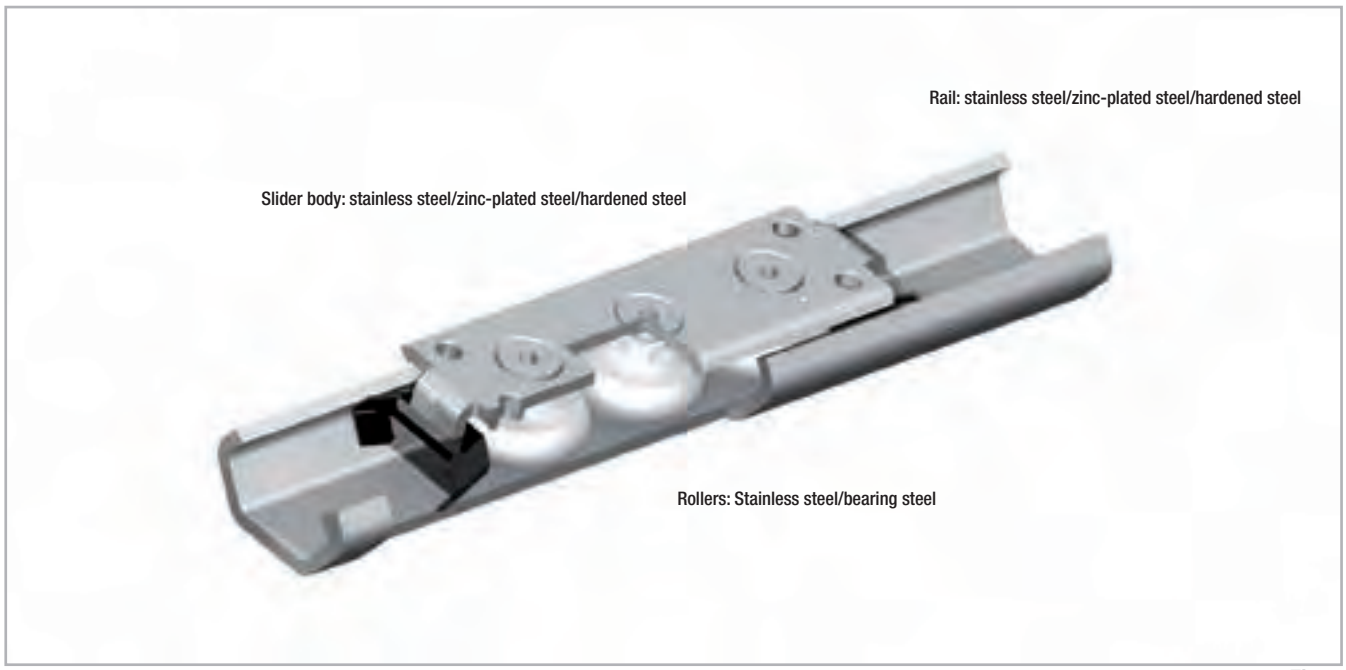

Fig. 7

Performance characteristics:

- Available sizes: 20-26-30-40-45 (depending on type of the guide)
- Max. slider operating speeds in the linear bearing rails: 1.5 m/s (59 in/s) (depending on application)
- Max. acceleration: 2 m/s² (78 in/s²) (depending on application)
- Max. radial load capacity: 1740 N for TEX/UEX series and TES/UES series; 3240 N for TEN/UEN series hardened with Rollon-Nox patented process.
- Operating temperature range: TEX/UEX series from -20 °C to +100°C (-4 °F to +212 °F); TES/UES series from -20 °C to +120 °C (-22 °F to +248 °F), TEN/UEN series from -20 °C to +120 °C (-22 °F to +338 °F).
- Available rail lengths: from 160 mm to 4000 mm (from 6,3 in to 157 in) in 80 mm increments (3,15 in).
- Rollers lubricated for life
- Roller seal/shield:
  CEX... Sliders => 2RS (splashproof seal),
  CES... Sliders => 2Z (dust cover seal)
  CEN... Sliders => 2Z (dust cover seal)
- Material: TEX/UEX series in stainless steel 1.4404 (AISI 316L), TES/UES series in zinc-plated steel ISO 2081, TEN/UEN series in hardened steel with Rollon-Nox patented process.
- Rollers material: carbon steel for TES/UES series and TEN/UEN series, stainless steel AISI440 for TEX/UEX series.

Remarks:

- The sliders are equipped with rollers that are in alternating contact with both sides of the raceway. Markings on the body around the outer roller pins indicate the correct arrangement of the rollers to the external load.
  Important note: Both outside rollers carry the radial load.
- With a simple adjustment of the eccentric roller, clearance or the desired preload can be set on the rail and slider.
- Sliders of Version 1 (with compact body) come standard with plastic wipers for cleaning the raceways.
- Wipers are available on request for sliders Version 2, 3, 4, 5 and 6 (please check availability for different sizes).
- Different sliders are available depending on the type and the size of the linear guide. Refer to every chapter for details.
- We do not recommend combining (stringing together) the rails.
- Recommended fixing screws: ISO 7380 with low head height (special TORX® screws are available on request).
- Do not use in applications with high number of cycles. For further information, please contact Rollon Technical Department.
- Sliders with wipers for TEN/UEN series are equipped with lubricating felts.

Load capacities

Fixed bearings TEX, TES, TEN

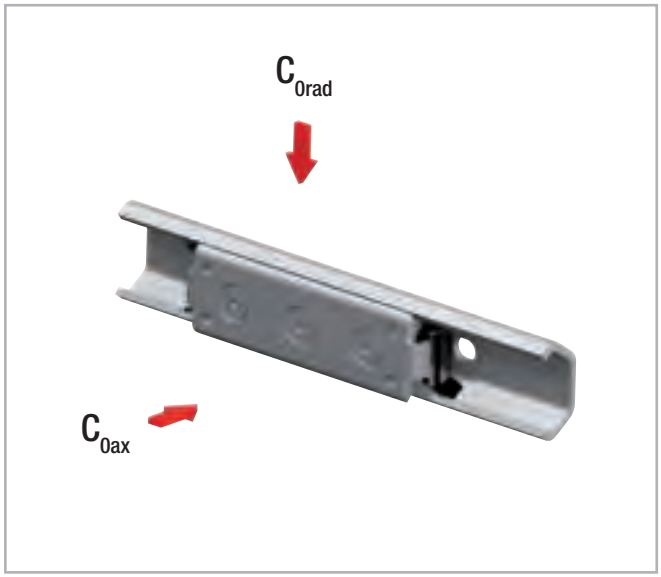

Fig. 8

Rail type	Configuration	C_{0rad} [N]	C_{0ax} [N]
TEX	TEX-20 – CEX20	300	170
	TEX-26 – CEX-26	800	400
	TEX-30 – CEX30	800	400
	TEX-40 – CEX-40	1600	800
	TEX-45 – CEX45	1600	860
TES	TES-20 – CES20	326	185
	TES-26 – CES-26	800	400
	TES-30 – CES30	870	435
	TES-40 – CES-40	1600	800
	TES-45 – CES45	1740	935
TEN/TEP	TEN-26 - CEN26-92	1120	380
	TEN-26 - CEN26-142	1520	540
	TEP30 - CEN30-3	1200	420
	TEP30 - CEN30-5	1620	580
	TEN-40 - CEN40-135	2400	820
	TEN-40 - CEN40-195	3240	1150

Resulting moment loads must be absorbed through the use of two sliders

Tab. 1

Compensating bearings UEX, UES, UEN

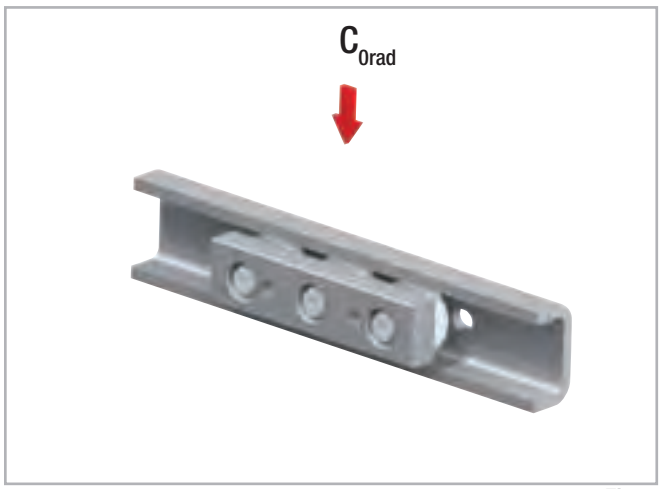

Fig. 9

Rail type	Configuration	C_{0rad} [N]
UEX	UEX-20 – CEXU20	300
	UEX-30 – CEXU30	800
	UEX-45 – CEXU45	1600
UES	UES-20 – CESU20	326
	UES-30 – CESU30	870
	UES-45 – CESU45	1740
UEN	UEN-40 - CEN40-135	1600
	UEN-40 - CEN40-195	2160

Tab. 2

Product dimensions

TEX - guide with shaped raceways in stainless steel

TEX rail in stainless steel

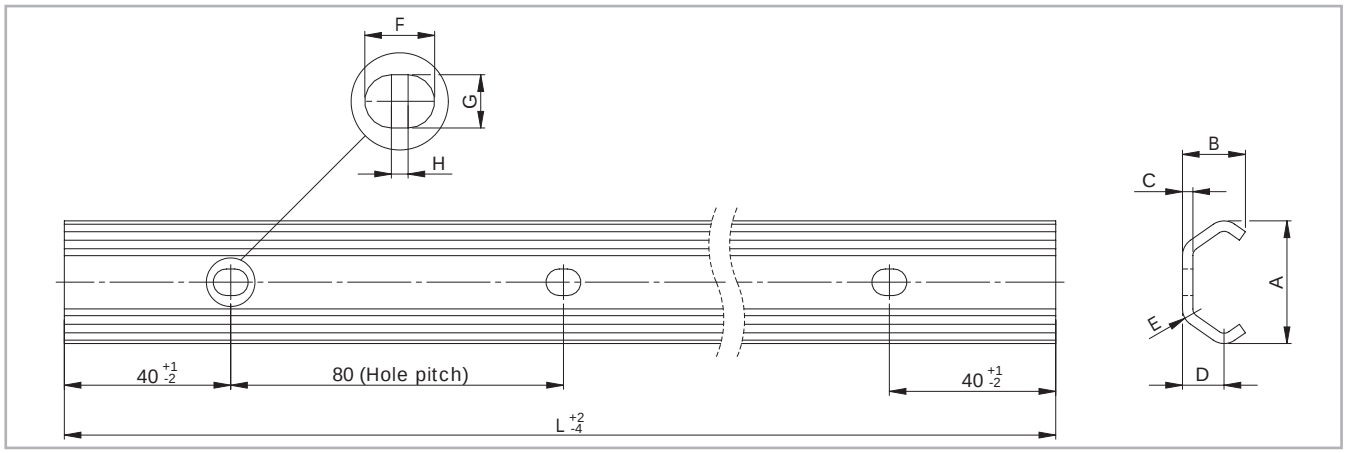

Fig. 10

Rail type	Size	A [mm]	B [mm]	C [mm]	D [mm]	E [mm]	F [mm]	G [mm]	H [mm]	Holes for screws	Weight [kg/m]
TEX	20	19,2	10	2	7	3	7	4,5	2	M4	0,47
	26	26	14	2,5	9,5	4	6,5	6,5	*	M5	0,80
	30	29,5	15	2,5	10	4,5	8,4	6,4	2	M5	0,90
	40	39,5	21	3	13	6	11	9	2	M8	1,55
	45	46,4	24	4	15,5	6,5	11	9	2	M8	2,29

* Cylindrical holes.

Tab. 3

Rail type	Size	Standard length L [mm]
TEX	**20** **30** **45**	160 - 240 - 320 - 400 - 480 - 560 - 640 - 720 - 800 - 880 - 960 - **1040** - 1120 - 1200 - 1280 - 1360 - 1440 - 1520 - 1600 - 1680 - 1760 - 1840 - 1920 - 2000 - **2080** - 2160 - 2240 - 2320 - 2400 - 2480 - 2560 - 2640 - 2720 - 2800 - 2880 - 2960 - 3040 - **3120**
	26	160 - 240 - 320 - 400 - 480 - 560 - 640 - 720 - 800 - 880 - 960 - 1040 - 1120 - 1200 - 1280 - 1360 - 440 - 1520 - 1600 - 1680 - 1760 - 1840 - 1920 - **2000** - 2080 - 2160 - 2240 - 2320 - 2400 - 2480 - 2560 - 2640 - 2720 - 2800 - 2880 - 2960 - 3040 - 3120 - 3200 - 3280 - 3360 - 3440 - 3520 - 3600 - 3680 - 3760 - 3840 - 3920 - **4000**
	40	320 - 400 - 480 - 560 - 640 - 720 - 800 - 880 - 960 - 1040 - 1120 - 1200 - 1280 - 1360 - 440 - 1520 - 1600 - 1680 - 1760 - 1840 - 1920 - **2000** - 2080 - 2160 - 2240 - 2320 - 2400 - 2480 - 2560 - 2640 - 2720 - 2800 - 2880 - 2960 - 3040 - 3120 - 3200 - 3280 - 3360 - 3440 - 3520 - 3600 - 3680 - 3760 - 3840 - 3920 - **4000**

Please specify hole pattern separately
Special lengths or pitches available upon request, please contact the sales department
The highlighted rail lenghts are available from stock

Tab. 4

CEX slider for rail TEX 20, 30, 45

Version 1 (with compact body for fixed rails)

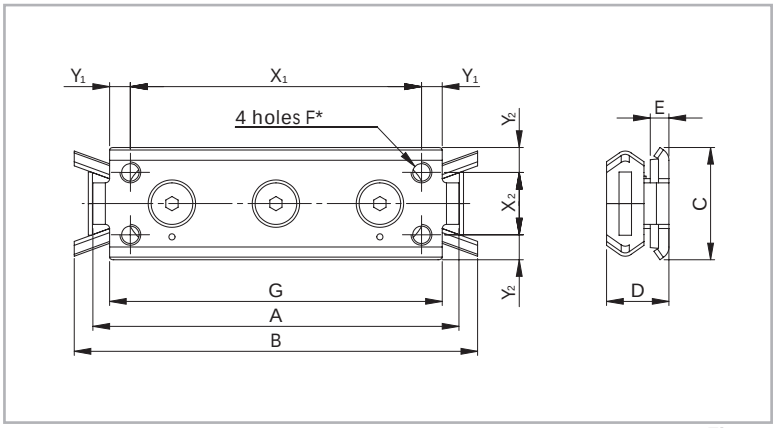

* For size 20: 2 M5 holes on the centreline with distance X_1

Fig. 11

Slider type	Size	A [mm]	B [mm]	C [mm]	D [mm]	E [mm]	F	G [mm]	X_1 [mm]	Y_1 [mm]	X_2 [mm]	Y_2 [mm]	Weight [kg]
CEX20-80	20	80	90	18	11,5	5,5	M5	71	60	5,5	-	9	0,05
CEX30-88	30	88	97	27	15	4,5	M5	80	70	5	15	6	0,11
CEX45-150	45	150	160	40	22	4	M6	135	120	7,5	23	8,5	0,40

Tab. 6

Version 2 (with solid body for fixed rails)

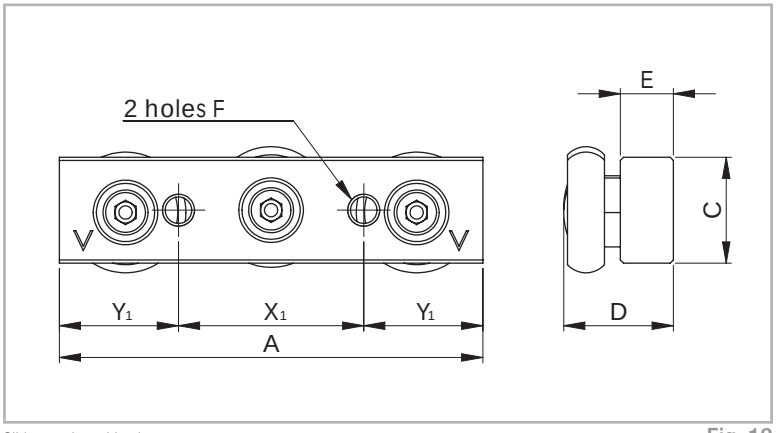

Slider version with wipers on request

Fig. 12

Slider type	Size	A [mm]	C [mm]	D [mm]	E [mm]	F	X_1 [mm]	Y_1 [mm]	Weight [kg]
CEX20-60	20	60	10	13	6	M5	20	20	0,04
CEX30-80	30	80	20	20,7	10	M6	35	22,5	0,17
CEX45-120	45	120	25	28,9	12	M8	55	32,5	0,47

Tab. 7

CEX slider for rail TEX 26, 40

Version 3 (with compact body for fixed rails)

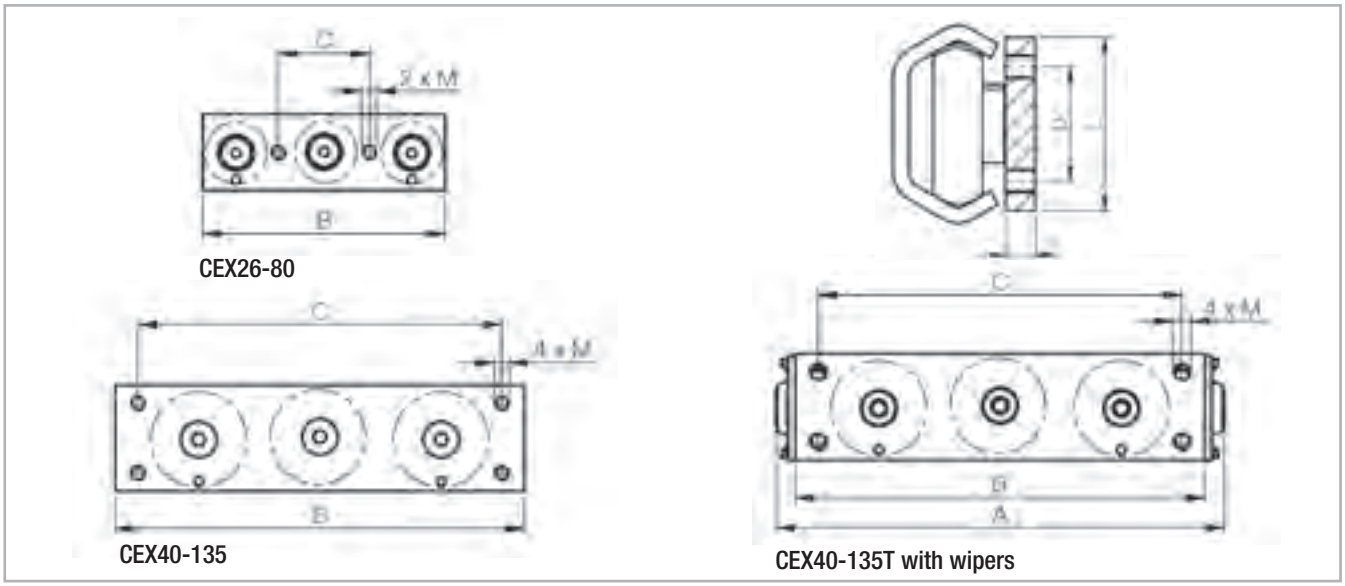

Fig. 13

Slider type	I [mm]	L [mm]	M	A [mm]	B [mm]	C [mm]	D [mm]	Weight [kg]
CEX26-80	4	20	M5	-	80	30	-	0.095
CEX40-135	6	35	M6	-	135	120	23	0.430
CEX40-135T				148				0.450

Tab. 8

UEX - guide with flat raceways in stainless steel

UEX rail in stainless steel

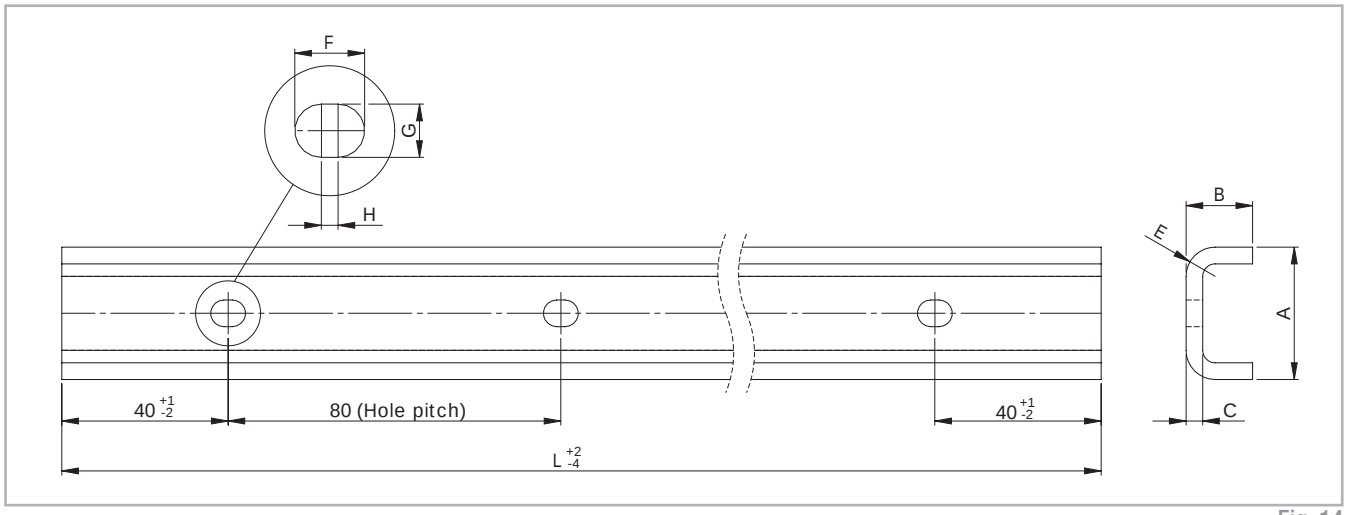

Fig. 14

Rail type	Size	A [mm]	B [mm]	C [mm]	E [mm]	F [mm]	G [mm]	H [mm]	Holes for screws	Weight [kg/m]
UEX	20	20,5	11	3	5,5	7	4.5	2	M4	0.77
	30	31,8	16	4	7	8.4	6.4	2	M5	1.39
	45	44.8	24.5	4.5	9.5	11	9	2	M8	2.79

Tab. 9

Rail type	Standard length L [mm]
UEX	160 - 240 - 320 - 400 - 480 - 560 - 640 - 720 - 800 - 880 - 960 - **1040** - 1120 - 1200 - 1280 - 1360 - 1440 - 1520 - 1600 - 1680 - 1760 - 1840 - 1920 - 2000 - **2080** - 2160 - 2240 - 2320 - 2400 - 2480 - 2560 - 2640 - 2720 - 2800 - 2880 - 2960 - 3040 - **3120**

Tab. 10

Please specify hole pattern separately
Special lengths or pitches available upon request, please contact the sales department
The highlighted rail lenghts are available from stock

CEXU slider for UEX rail

Version 4 (with solid body for compensating rail)

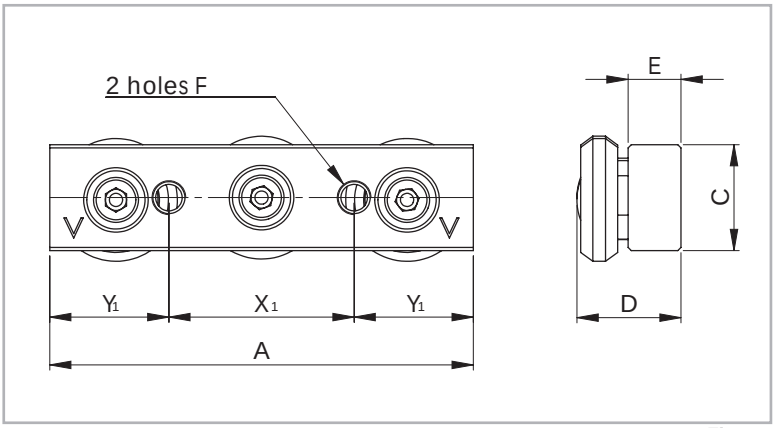

Slider version with wipers on request

Fig. 15

Slider type	Size	A [mm]	C [mm]	D [mm]	E [mm]	F [mm]	X_1 [mm]	Y_1 [mm]	Weight [kg]
CEXU20-60	20	60	10	11.85	6	M5	20	20	0.04
CEXU30-80	30	80	20	19.9	10	M6	35	22.5	0.16
CEXU45-120	45	120	25	26.4	12	M8	55	32.5	0.45

Tab. 11

TEX-UEX: Mounted sliders and rails

Guide with shaped raceways

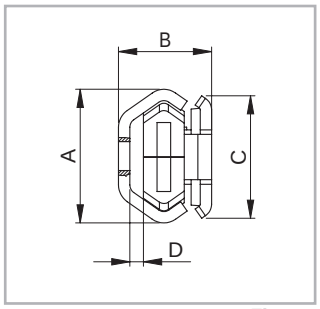

Fig. 16

Version 1
(Slider with compact body)

Configuration	A [mm]	B [mm]	C [mm]	D [mm]
TEX-20 – CEX20-80	19.2	16	18	2.5
TEX-30 – CEX30-88	29.5	20.5	27	3.5
TEX-45 – CEX45-150	46.4	31	40	5

Tab. 12

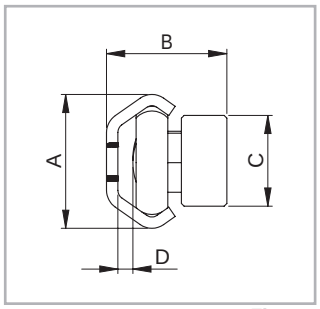

Fig. 17

Version 2
(Slider with solid body)

Configuration	A [mm]	B [mm]	C [mm]	D [mm]
TEX-20 – CEX20-60	19.2	17.8	10	2.6
TEX-30 – CEX30-80	29.5	26.5	20	3.3
TEX-45 – CEX45-120	46.4	38	25	5.1

Tab. 13

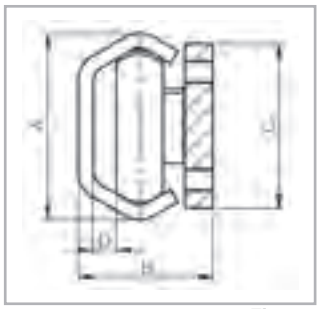

Fig. 18

Version 3
(Slider with compact body)

Configuration	A [mm]	B [mm]	C [mm]	D [mm]
TEX-26 – CEX26-80	26	22	20	3.7
TEX-40 – CEX40-135	39.5	28.65	35	5

Tab. 14

Guide with flat raceways

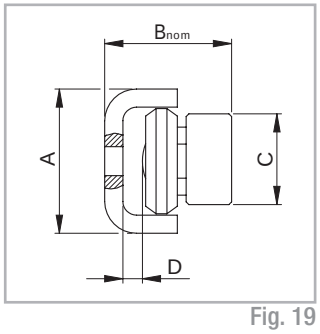

Fig. 19

Version 4
(Slider with solid body)

Configuration	A [mm]	B_{nom} [mm]	C [mm]	D [mm]
UEX-20 – CEXU20-60	20.5	18.25 ± 0.6	10	3.4
UEX-30 – CEXU30-80	31.8	27.95 ± 1.0	20	4.05
UEX-45 – CEXU45-120	44.8	37.25 ± 1.75	25	6.35

Tab. 15

TES - guide with shaped raceways in zinc-plated steel

TES rail in zinc-plated steel

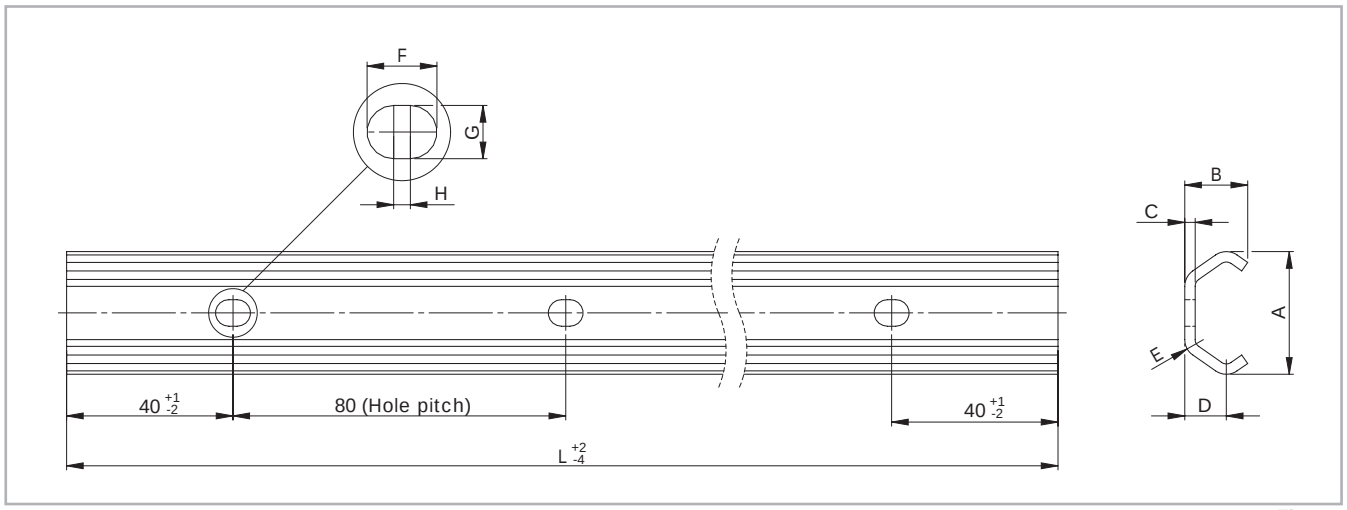

Fig. 20

Rail type	Size	A [mm]	B [mm]	C [mm]	D [mm]	E [mm]	F [mm]	G [mm]	H [mm]	Holes for screws	Weight [kg/m]
TES	20	19.2	10	2	7	3	7	4.5	2	M4	0.47
	26	26	14	2.5	9.5	4	6.5	6.5	*	M5	0.80
	30	29.4	14.1	2.5	10	4.5	8.4	6.4	2	M5	0.90
	40	39.5	21	3	13	6	6.5	9	2	M8	1.55
	45	46.4	24	4	15.5	6.5	11	9	2	M8	2.29

* Rail size 26 have cylindrical holes.

Tab. 16

Rail type	Size	Standard length L [mm]
TES	**20** **30** **45**	160 - 240 - 320 - 400 - 480 - 560 - 640 - 720 - 800 - 880 - 960 - **1040** - 1120 - 1200 - 1280 - 1360 - 1440 - 1520 - 1600 - 1680 - 1760 - 1840 - 1920 - 2000 - **2080** - 2160 - 2240 - 2320 - 2400 - 2480 - 2560 - 2640 - 2720 - 2800 - 2880 - 2960 - 3040 - **3120**
	26	160 - 240 - 320 - 400 - 480 - 560 - 640 - 720 - 800 - 880 - 960 - 1040 - 1120 - 1200 - 1280 - 1360 - 440 - 1520 - 1600 - 1680 - 1760 - 1840 - 1920 - **2000** - 2080 - 2160 - 2240 - 2320 - 2400 - 2480 - 2560 - 2640 - 2720 - 2800 - 2880 - 2960 - 3040 - 3120 - 3200 - 3280 - 3360 - 3440 - 3520 - 3600 - 3680 - 3760 - 3840 - 3920 - **4000**
	40	320 - 400 - 480 - 560 - 640 - 720 - 800 - 880 - 960 - 1040 - 1120 - 1200 - 1280 - 1360 - 440 - 1520 - 1600 - 1680 - 1760 - 1840 - 1920 - **2000** - 2080 - 2160 - 2240 - 2320 - 2400 - 2480 - 2560 - 2640 - 2720 - 2800 - 2880 - 2960 - 3040 - 3120 - 3200 - 3280 - 3360 - 3440 - 3520 - 3600 - 3680 - 3760 - 3840 - 3920 - **4000**

Please specify hole pattern separately
Special lengths or pitches available upon request, please contact the sales department
The highlighted rail lenghts are available from stock

Tab. 17

CES slider for rail TES 20, 30, 45

Version 1 (with compact body for fixed rails)

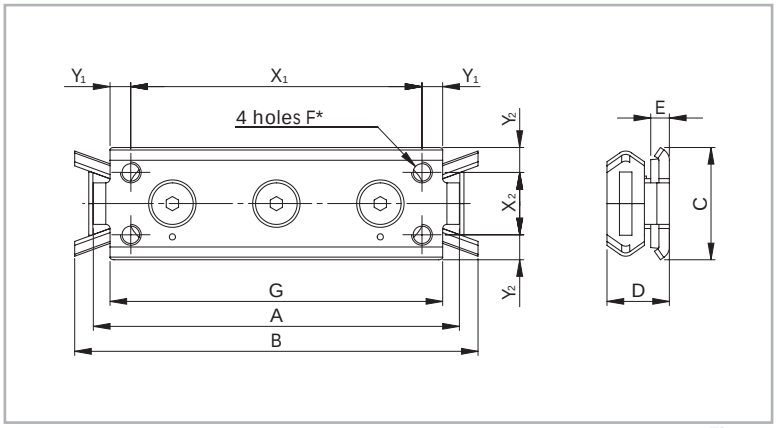

* For size 20: 2 M5 holes on the centreline with distance X_1

Fig. 21

Slider type	Size	A [mm]	B [mm]	C [mm]	D [mm]	E [mm]	F	G [mm]	X_1 [mm]	Y_1 [mm]	X_2 [mm]	Y_2 [mm]	Weight [kg]
CES20-80	20	80	90	18	11.5	5.5	M5	71	60	5.5	-	9	0.05
CES30-88	30	88	97	27	15	4.5	M5	80	70	5	15	6	0.11
CES45-150	45	150	160	40	22	4	M6	135	120	7.5	23	8.5	0.40

Tab. 18

Version 2 (with solid body for fixed rails)

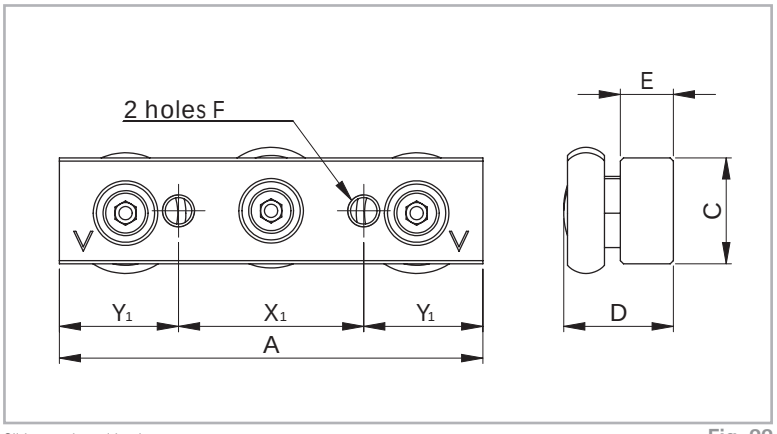

Slider version with wipers on request

Fig. 22

Slider type	Size	A [mm]	C [mm]	D [mm]	E [mm]	F	X_1 [mm]	Y_1 [mm]	Weight [kg]
CES20-60	20	60	10	13	6	M5	20	20	0.04
CES30-80	30	80	20	20.7	10	M6	35	22.5	0.17
CES45-120	45	120	25	28.9	12	M8	55	32.5	0.47

Tab. 19

CES slider for rail TES 26, 40

Version 3 (with compact body for fixed rails)

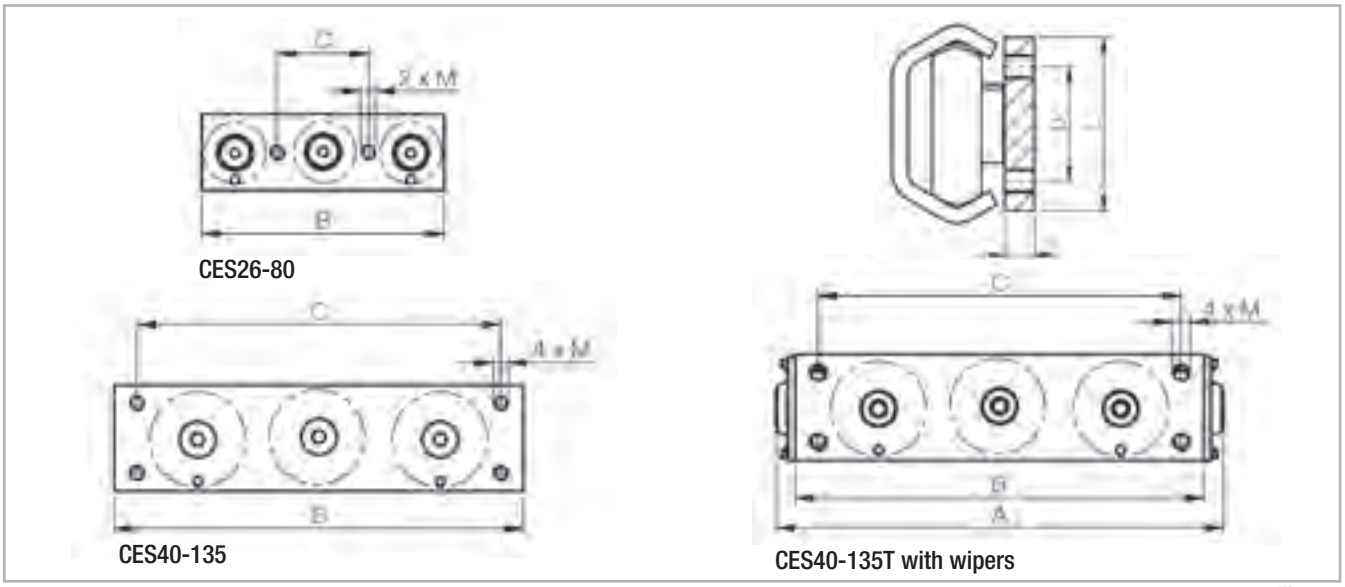

Fig. 23

Slider type	I [mm]	L [mm]	M	A [mm]	B [mm]	C [mm]	D [mm]	Weight [kg]
CES26-80	4	20	M5	-	80	30	-	0.095
CES40-135	6	35	M6	-	135	120	23	0.430
CES40-135T				148				0.450

Tab. 20

UES - guide with flat raceways in zinc-plated steel

UES rail in zinc-plated steel

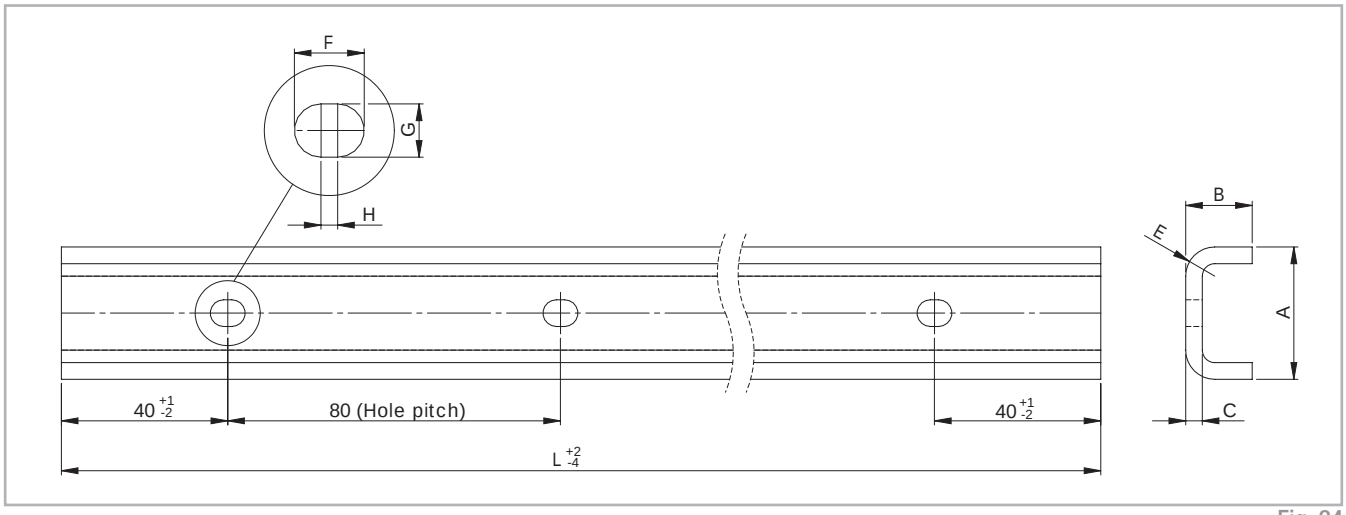

Fig. 24

Rail type	Size	A [mm]	B [mm]	C [mm]	E [mm]	F [mm]	G [mm]	H [mm]	Holes for screws	Weight [kg/m]
UES	20	20.5	11	3	5.5	7	4.5	2	M4	0.77
	30	31.8	16	4	7	8.4	6.4	2	M5	1.39
	45	44.8	24.5	4.5	9.5	11	9	2	M8	2.79

Tab. 21

Rail type	Standard length L [mm]
UES	160 - 240 - 320 - 400 - 480 - 560 - 640 - 720 - 800 - 880 - 960 - **1040** - 1120 - 1200 - 1280 - 1360 - 1440 - 1520 - 1600 - 1680 - 1760 - 1840 - 1920 - 2000 - **2080** - 2160 - 2240 - 2320 - 2400 - 2480 - 2560 - 2640 - 2720 - 2800 - 2880 - 2960 - 3040 - **3120**

Tab. 22

Please specify hole pattern separately
Special lengths or pitches available upon request, please contact the sales department
The highlighted rail lenghts are available from stock

CESU slider for UES rail

Version 4 (with solid body for compensating rail)

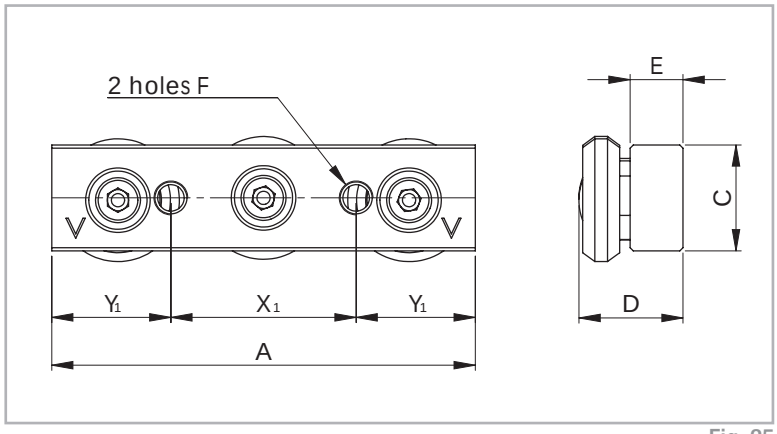

Slider version with wipers on request

Fig. 25

Slider type	Size	A [mm]	C [mm]	D [mm]	E [mm]	F [mm]	X_1 [mm]	Y_1 [mm]	Weight [kg]
CESU20-60	20	60	10	11.85	6	M5	20	20	0.04
CESU30-80	30	80	20	19.9	10	M6	35	22.5	0.16
CESU45-120	45	120	25	26.4	12	M8	55	32.5	0.45

Tab. 23

TES-UES: Mounted sliders and rails

Guide with shaped raceways

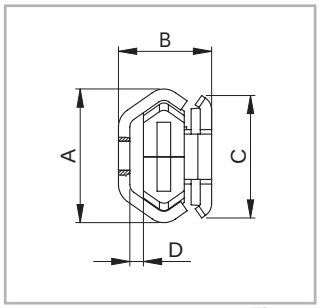

Fig. 26

Version 1
(Slider with compact body)

Configuration	A [mm]	B [mm]	C [mm]	D [mm]
TES-20 – CES20-80	19.2	16	18	2.5
TES-30 – CES30-88	29.4	20.5	27	3.5
TES-45 – CES45-150	46.4	31	40	5

Tab. 24

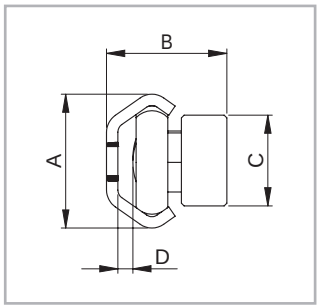

Fig. 27

Version 2
(Slider with solid body)

Configuration	A [mm]	B [mm]	C [mm]	D [mm]
TES-20 – CES20-60	19.2	17.8	10	2.6
TES-30 – CES30-80	29.4	26.5	20	3.3
TES-45 – CES45-120	46.4	38	25	5.1

Tab. 25

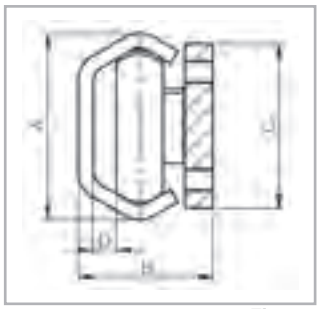

Fig. 28

Version 3
(Slider with compact body)

Configuration	A [mm]	B [mm]	C [mm]	D [mm]
TES-26 – CES26-80	26	22	20	3.7
TES-40 – CES40-135	39.5	28.65	35	5

Tab. 26

Guide with flat raceways

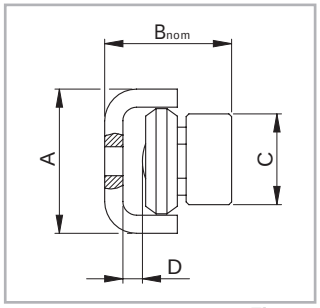

Fig. 29

Version 4
(Slider with solid body)

Configuration	A [mm]	B_{nom} [mm]	C [mm]	D [mm]
UES-20 – CESU20-60	20.5	18.25 ± 0.6	10	3.4
UES-30 – CESU30-80	31.8	27.95 ± 1.0	20	4.05
UES-45 – CESU45-120	44.8	37.25 ± 1.75	25	6.35

Tab. 27

TEN/TEP and UEN - guide with shaped or flat raceways hardened with Rollon-Nox patented process.

TEN/TEP rail with shaped raceways

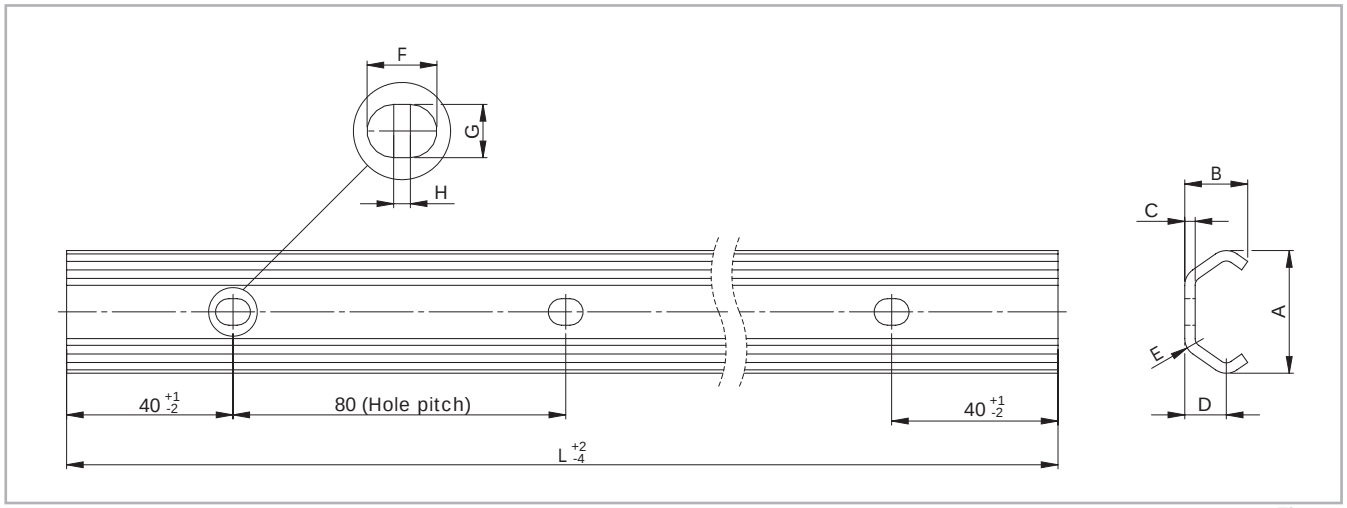

Fig. 30

UEN rail with flat raceways

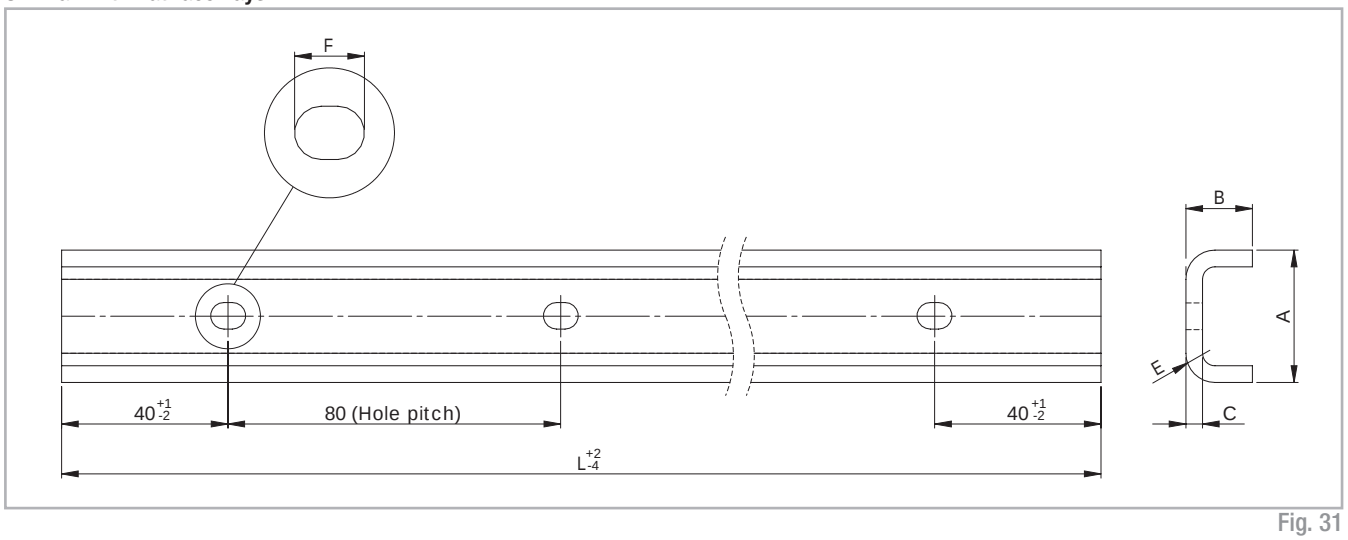

Fig. 31

Rail type	Sezione	A [mm]	B [mm]	C [mm]	E [mm]	F [mm]	G [mm]	H [mm]	Holes for screws	Weight [kg/m]
TEN	26	26	14	2.5	4	6.5	6.5	*	M5	0.80
TEP	30	29.4	14.1	2.5	4	8.4	6.4	2	M5	0.95
TEN	40	39.5	21	3	6	11	9	2	M8	1.55
UEN	40	38.5	21	3	4	11	9	2	M8	1.70

* Cylindrical holes.

Tab. 28

Rail type	Standard length L [mm]
TEN/TEP UEN	160 - 240 - 320 - 400 - 480 - 560 - 640 - 720 - 800 - 880 - 960 - **1040** - 1120 - 1200 - 1280 - 1360 - 1440 - 1520 - 1600 - 1680 - 1760 - 1840 - 1920 - 2000 - **2080** - 2160 - 2240 - 2320 - 2400 - 2480 - 2560 - 2640 - 2720 - 2800 - 2880 - 2960 - 3040 - 3120 - 3200 - 3360 - 3440 - 3520 - 3600 - 3680 - 3760 - 3840 - 3920 - **4000**

Please specify hole pattern separately
Special lengths or pitches available upon request, please contact the sales department
The highlighted rail lenghts are available from stock

Tab. 29

Version	Characteristics
BASIC	Rolled steel rail with “ROLLON-NOX” nitride hardening, black oxidation, cut to size after treatment. The cut ends are protected with black spray paint.
K	As base version, but with additional treatment “ROLLON e-coating” black electro painting on the entire surface, except on the inner raceway area, providing a high corrosion resistance. The raceways are still protected by the standard oxidation and raceway lubrication.

Tab. 30

Optional surface treatments where high corrosion resistance is required: Rollon e-coating technology, black epoxy resin electrodeposition with controlled thickness on the entire surface, except on the raceways, as masked before electrodepositioning. The raceways remain with standard oxidation treatment and protected with a thin layer of lubricant, released by the wipers.

- Black glossy finish
- Excellent resistance in humid ambients
- Good resistance to oils and hydrocarbons

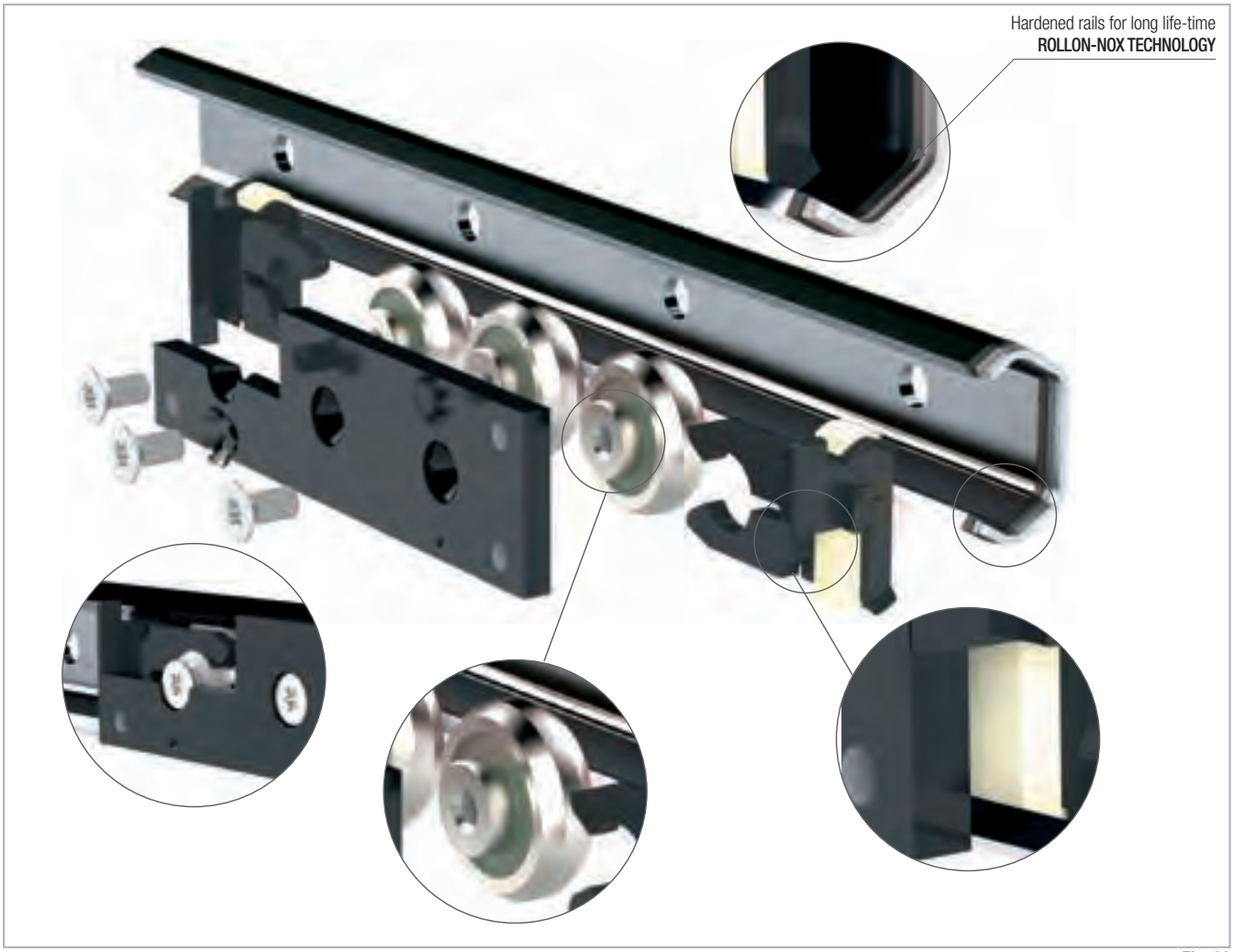

Fig. 32

CEN slider for rail TEN 26

The CEN slider has slim steel body with black glossy cataphoresis painting for high corrosion resistance. Available in 3 and 5 roller version, with and without wipers.

Version 5 (slider with compact body for fixed rails)

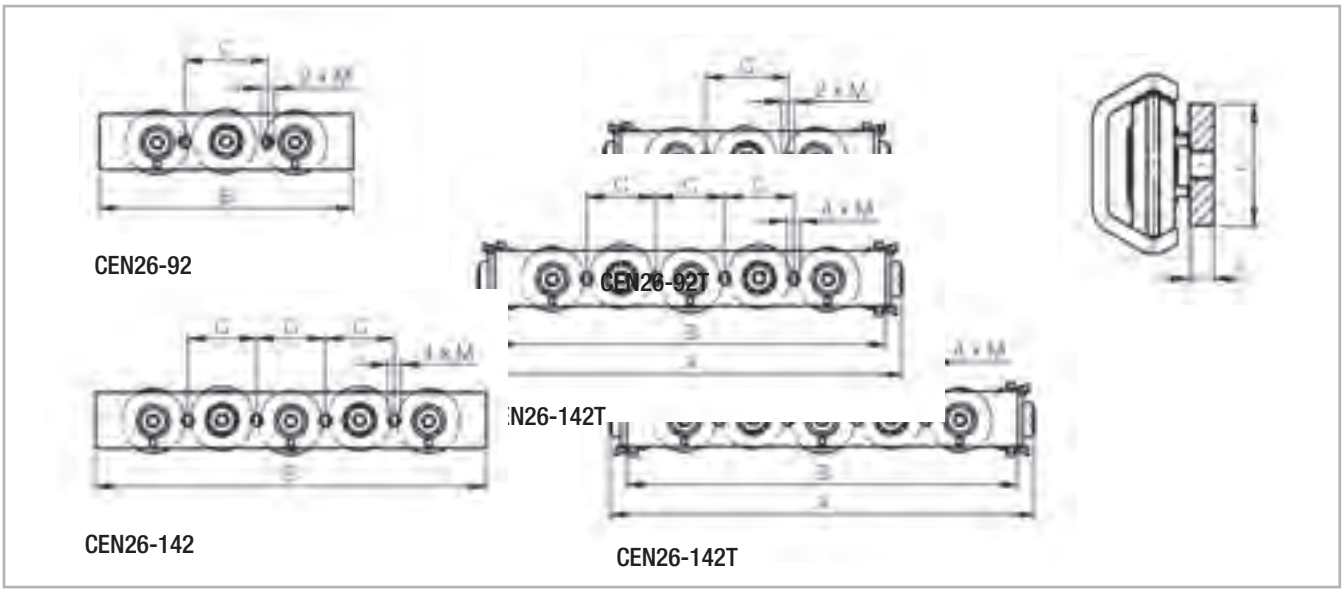

Fig. 33

Slider type	Rail type	I [mm]	L [mm]	M [mm]	A [mm]	B [mm]	C [mm]	Weight [kg]	Dynamic coefficient C [N]
CEN26-92	TEN26	4	20	M5	-	92	30	0.10	1280
CEN26-92T					104			0.11	
CEN26-142					-	142	25	0.14	1730
CEN26-142T					154			0.15	

Tab. 31

CEP slider for rail TEP 30

The CEP slider has slim steel body with black glossy cataphoresis painting for high corrosion resistance. Available in 3 and 5 roller version, with and without wipers.

Version 5 (slider with compact body for fixed rails)

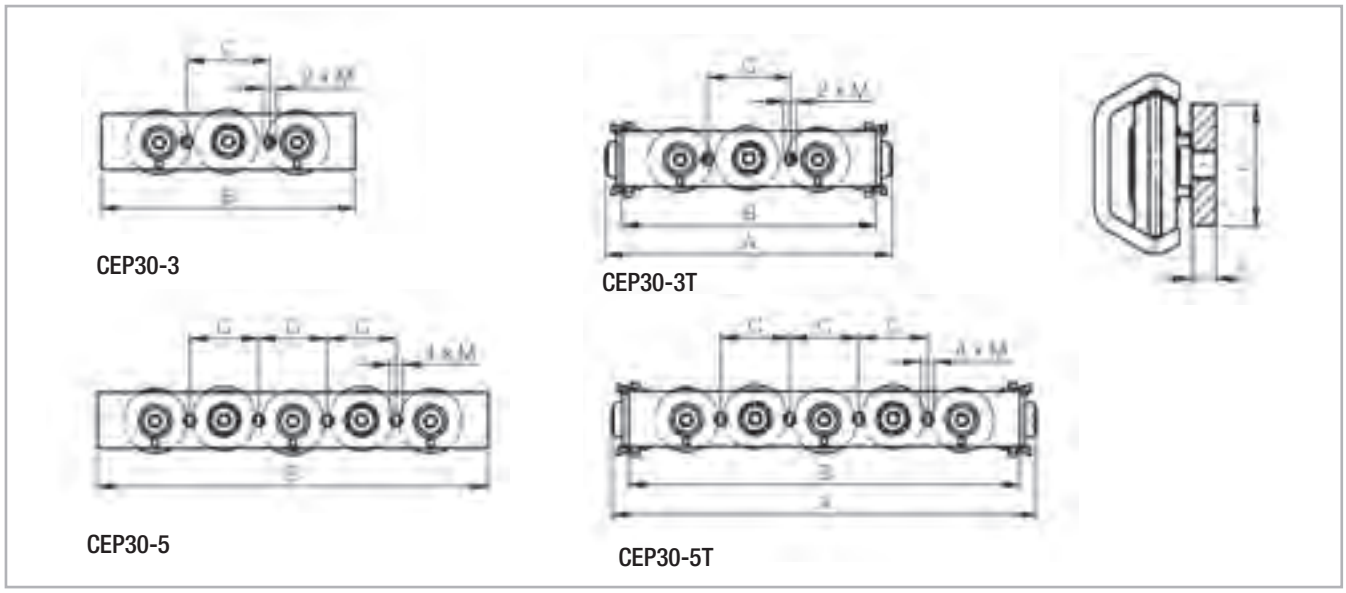

Fig. 34

Slider type	Rail type	I [mm]	L [mm]	M [mm]	A [mm]	B [mm]	C [mm]	Weight [kg]	Dynamic coefficient C [N]
CEP30-3	TEP30	4	20	M5	-	92	30	0.12	1360
CEP30-3T					104			0.13	
CEP30-5					-	142	25	0.16	1830
CEP30-5T					154			0.17	

Tab. 32

CEN slider for rail TEN-40 and UEN-40

Version 6 (slider with compact body for fixed rails and compensating rails)

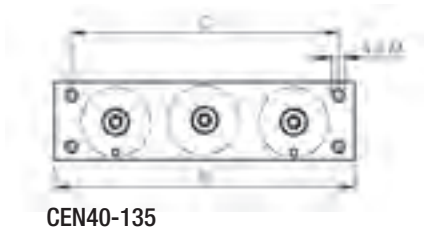

CEN40-135

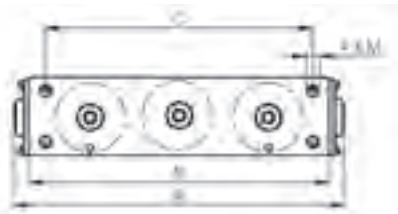

CEN40-135T

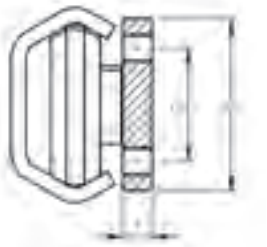

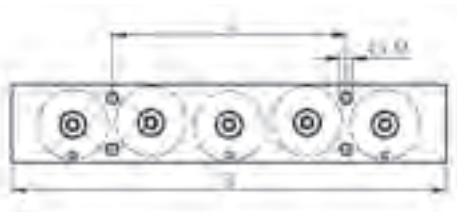

CEN40-195

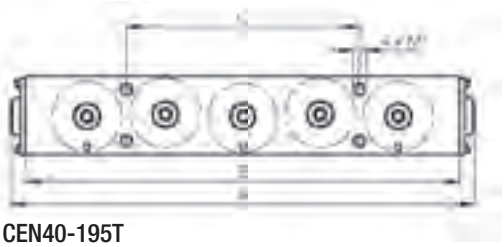

CEN40-195T

Fig. 35

Slider type	Rail type	l [mm]	L [mm]	M [mm]	A [mm]	B [mm]	C [mm]	D [mm]	Weight [kg]	Dynamic coefficient C [N]
CEN40-135	TEN40	6	35	M6	-	135	120	23	0.43	2720
CEN40-135T					148				0.45	
CEN40-195					-	195	105		0.60	3670
CEN40-195T					208				0.62	
CEN40-135	UEN40	6	35	M6	-	135	120	23	0.43	1820
CEN40-135T					148				0.45	
CEN40-195					-	195	105		0.60	2460
CEN40-195T					208				0.62	

When sliders are mounted in UEN rails load capacities are reduced (see p. XR-5, Tab. 2)

Tab. 33

TEN-TEP-UEN: Mounted sliders and rails

Guide with shaped raceways

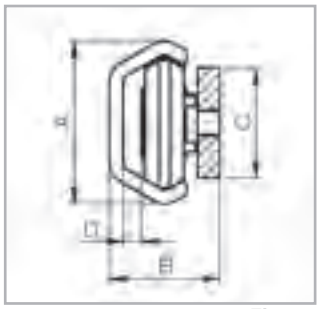

Fig. 36

Version 5
(Slider with compact body)

Configuration	A [mm]	B [mm]	C [mm]	D [mm]
TEN-26 – CEN26-92 TEN-26 – CEN26-142	26	22	20	3.7
TEP-30 - CEP30-3 TEP-30 - CEP30-5	29.4	19.9	20	3.3

Tab. 34

Guide with flat or shaped raceways

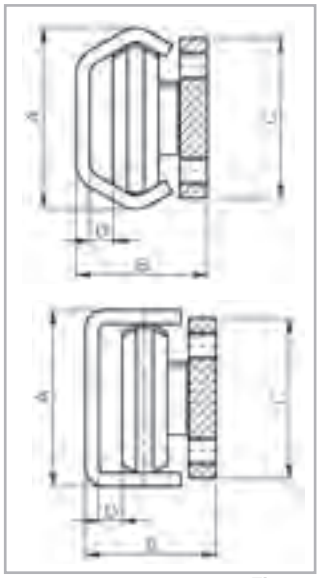

Fig. 37

Version 6
(Slider with compact body)

Configuration	A [mm]	B [mm]	C [mm]	D [mm]
TEN-40 – CEN40-135 TEN-40 – CEN40-195	39.5	28.65	35	5
UEN-40 – CEN40-135 UEN-40 – CEN40-195	38.5	28.65	35	5

Tab. 35

Accessories

Rollers

Version 1

(Slider with compact body for fixed rails)

CRPNX / CRPN

Concentric rollers

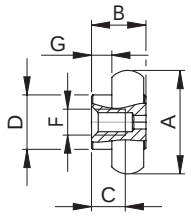

CRPAX / CRPA

Eccentric rollers

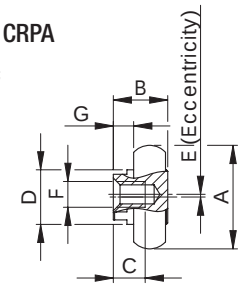

Fig. 38

Roller type	for slider	A [mm]	B [mm]	C [mm]	D [mm]	E [mm]	F	G [mm]	C_{0rad} [N]	Weight [kg]
CRPNX20-2RS	CEX20-80	14	8.5	6	8	-	M4	4.0	150	0.006
CRPN20-2Z	CES20-80								163	
CRPAX20-2RS	CEX20-80					0.5			150	
CRPA20-2Z	CES20-80								163	
CRPNX30-2RS	CEX30-88	22.8	12	7	12	-	M5	4.5	400	0.02
CRPN30-2Z	CES30-88								435	
CRPAX30-2RS	CEX30-88					0.6			400	
CRPA30-2Z	CES30-88								435	
CRPNX45-2RS	CEX45-150	35.6	18	12	16	-	M6	6.0	800	0.068
CRPN45-2Z	CES45-150								870	
CRPAX45-2RS	CEX45-150					0.8			800	
CRPA45-2Z	CES45-150								870	

2RS (splashproof seal for CEX slider), 2Z (dust cover seal for CES slider)

Tab. 36

Version 2

(Slider with solid body for fixed rails)

CRNX / CRN

Concentric rollers

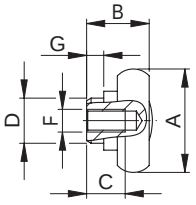

CRAX / CRA

Eccentric rollers

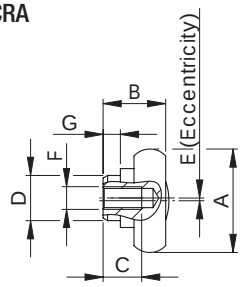

Fig. 39

Roller type	for slider	A [mm]	B [mm]	C [mm]	D [mm]	E [mm]	F	G [mm]	C_{0rad} [N]	Weight [kg]
CRNX20-2RS	CEX20-60	14	8.7	6	6	-	M4	1.8	150	0.006
CRN20-2Z	CES20-60								163	
CRAX20-2RS	CEX20-60					0.5			150	
CRA20-2Z	CES20-60								163	
CRNX30-2RS	CEX30-80	22.8	14	9	10	-	M5	3.8	400	0.022
CRN30-2Z	CES30-80								435	
CRAX30-2RS	CEX30-80					0.6			400	
CRA30-2Z	CES30-80								435	
CRNX45-2RS	CEX45-120	35.6	20.5	14.5	12	-	M6	4.5	800	0.07
CRN45-2Z	CES45-120								870	
CRAX45-2RS	CEX45-120					0.8			800	
CRA45-2Z	CES45-120								870	

2RS (splashproof seal for CEX slider), 2Z (dust cover seal for CES slider)

Tab. 37

Version 3

Slider with compact body for fixed rails

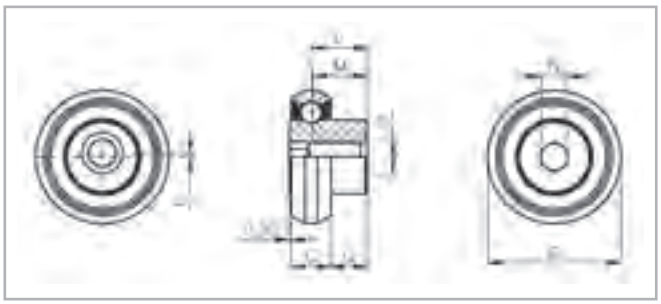

Fig. 40

RLN/RLNX

Concentric rollers

RLA/RLAX

Eccentric rollers

Type	for slider	E [mm]	D [mm]	C [mm]	M [mm]	G [mm]	P [mm]	N (Key)		B [mm]	C_{0rad} [N]	Weight [Kg]
								Key	N [mm]			
RLNX26	CEX26-80	-	20.3	6	8.5	5.5	8.2	4	4	M5	400	0.013
RLAX26		0.6									400	
RLN26	CES26-80	-	20.2								400	
RLA26		0.6									400	
RLNX40	CEX40-135	-	31.5	10	9.65	4.65	10	5	5	M6	800	0.048
RLAX40		0.7									800	
RLN40	CES40-135	-									800	
RLA40		0.7									800	

2RS (splashproof seal for CEX slider), 2Z (dust cover seal for CES slider)

Tab. 38

Version 4

(Slider with solid body for compensating rails)

CPNX / CPN

Concentric rollers

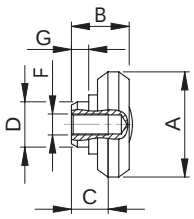

CPAX / CPA

Eccentric rollers

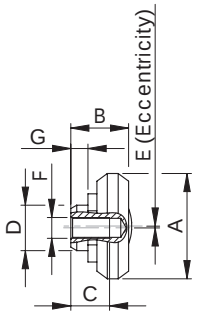

Fig. 41

Roller type	for slider	A [mm]	B [mm]	C [mm]	D [mm]	E [mm]	F	G [mm]	C_{0rad} [N]	Weight [kg]
CPNX20-2RS	CEXU20-60	14	7.35	5.5	6	-	M4	1.8	150	0.004
CPN20-2Z	CESU20-60								163	
CPAX20-2RS	CEXU20-60					0.4			150	
CPA20-2Z	CESU20-60								163	
CPNX30-2RS	CEXU30-80	23.2	13	7	10	-	M5	3.8	400	0.018
CPN30-2Z	CESU30-80								435	
CPAX30-2RS	CEXU30-80					0.6			400	
CPA30-2Z	CESU30-80								435	
CPNX45-2RS	CEXU45-120	35	18	12	12	-	M6	4.5	800	0.06
CPN45-2Z	CESU45-120								870	
CPAX45-2RS	CEXU45-120					0.8			800	
CPA45-2Z	CESU45-120								870	

2RS (splashproof seal for CEX slider), 2Z (dust cover seal for CES slider)

Tab. 39

Version 5

(Slider with compact body for fixed rails)

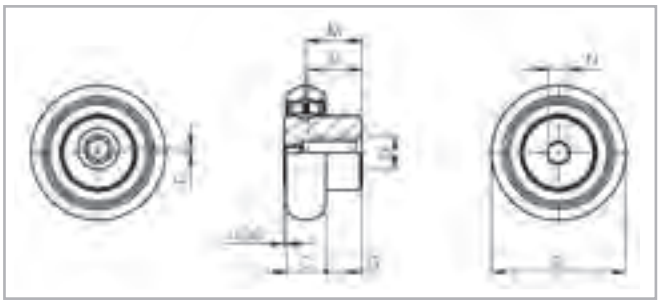

RLN26/RLA26

Fig. 42

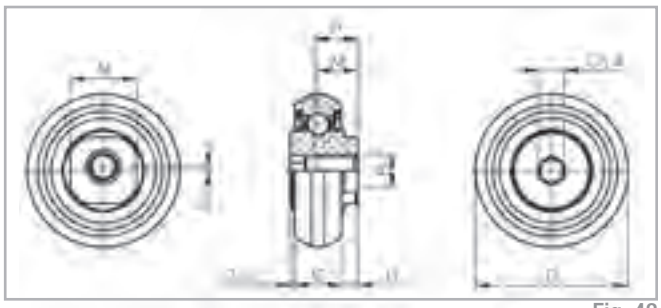

CPN30Z-55/CPA30Z-55

Fig. 43

Type	for slider	E [mm]	D [mm]	C [mm]	M [mm]	G [mm]	P [mm]	N (Key)		B [mm]	C [N]	C_{0rad} [N]	Weight [Kg]
								Key	N [mm]				
RLN26	CEN26-92 CEN26-142	-	20.2	6	8.5	5.5	8.2	4	4	M5	640	560	0.013
RLA26		0,6									640	560	
CPN30Z-55	CEN30-3 CEN30-5	-	23.15	7	6	2.5	6.5	KLM28	4	10	M5	680	600	0.020
CPA30Z-55		0,6									680	600	

2Z (dust cover seal for CEN slider)

Tab. 40

Version 6

(Slider with compact body for fixed rails and compensating rails)

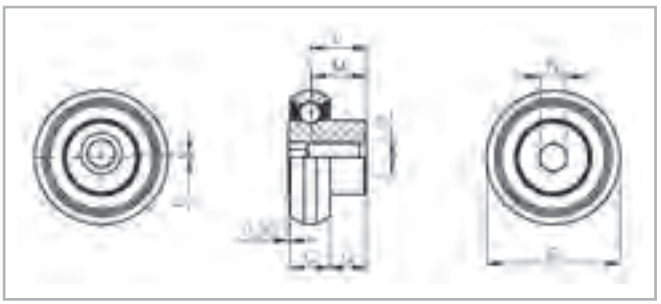

Fig. 44

RLN

Concentric rollers

RLA

Eccentric rollers

Type	for slider	E [mm]	D [mm]	C [mm]	M [mm]	G [mm]	P [mm]	N (Key)		B [mm]	C [N]	C_{0rad} [N]	Weight [Kg]
								Key	N [mm]				
RLN40	CEN40-135 CEN40-195	-	31.5	10	9.65	4.65	10	5	5	M6	1360 (925*)	1200 (800*)	0.048
RLA40		0.7									1360 (925*)	1200 (800*)	

2Z (dust cover seal for CEN slider)
*UEN40

Tab. 41

Fixing screws

We recommend fixing screws according to ISO 7380 with low head height or TORX® screws (see fig. 45) on request.

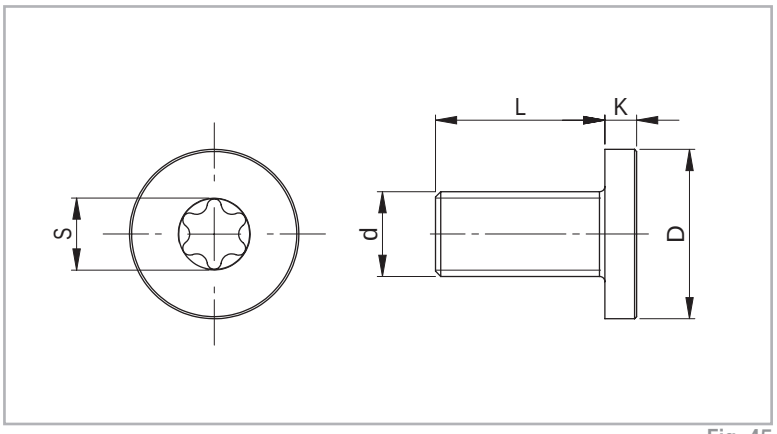

Fig. 45

Rail size	Screw type	d	D [mm]	L [mm]	K [mm]	S	Tightening torque [Nm]
20	M4 x 8	M4 x 0.7	8	8	2	T20	3
26	M5 x 10	M5 x 0.8	10	10	2	T25	9
30	M5 x 10	M5 x 0.8	10	10	2	T25	9
40	M8 x 16	M8 x 1.25	16	16	3	T40	20
45	M8 x 16	M8 x 1.25	16	16	3	T40	22

Tab. 42

Technical instructions

Lubrication

All radial ball bearing rollers in the X-Rail series are lubricated for life. It is advisable to lubricate the raceways with specific bearing grease. The interval between lubrication treatments depends mainly on environmental conditions, bearing speed and temperature.

Under normal conditions, it is advisable to lubricate locally after 100 km of use or after six months of service. In case of critical applications, lubrication treatments should be more frequent. Before lubricating, remember to clean the raceway surfaces carefully. We advise using a lithium grease of medium consistency for rolling-element bearings.

Different lubricants are available on request for special applications:

- FDA-approved lubricant for use in the food industry
- specific lubricant for clean rooms
- specific lubricant for the marine technology sector
- specific lubricant for high and low temperatures

For specific information, contact Rollon technical support.

Under normal conditions, correct lubrication:

- reduces friction
- reduces wear
- reduces stress on contact surfaces due to elastic deformation
- reduces noise during operation
- increases the regularity of the rolling movement

T+U-System

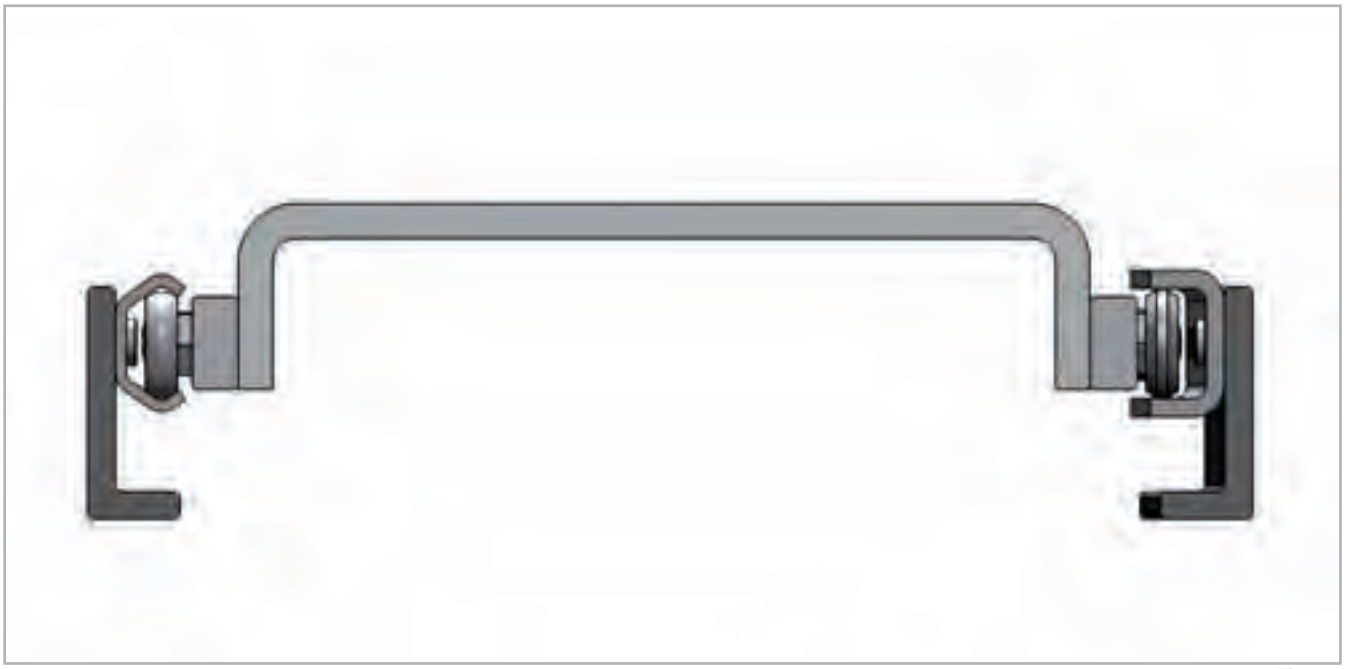

Fig. 46

Solves axial deviations in parallelism

Mounting two linear bearing rails in a parallel manner is always important but rarely easy. Distortions in axial alignment can drastically reduce the life of the rails. These distortions can bind and overload sliders. Rollon offers an outstanding solution for the alignment of dual track carriages. Using shaped and flat raceways it is possible to avoid axial deviation in parallelism of the mounting surfaces without additional modifications of those surfaces. T+U rails easily address these alignment issues to create an economical parallel rail system.

In a T+U-System, the slider in the T rail carries axial and radial loads and guides the movement of the U, which has lateral freedom.

U rails have flat parallel raceways that allow free lateral movement of the sliders. The maximum freedom a slider in the U rail can offer can be calculated using the values S_1 and S_2 (see pg. XR-29, fig. 47, tab. 43). With nominal value B_{nom} as the starting point, S_1 indicates the maximum allowed movement into the rail, while S_2 represents the maximum offset towards the outside of the rail.

If the length of the guide rail is known, the maximum allowable angle deviation of the mounting surface (see pg. XR-29, fig. 48) can be obtained. In this case the slide in the U rail has the freedom to travel from the innermost position S_1 to the outermost position S_2.

Maximum offset

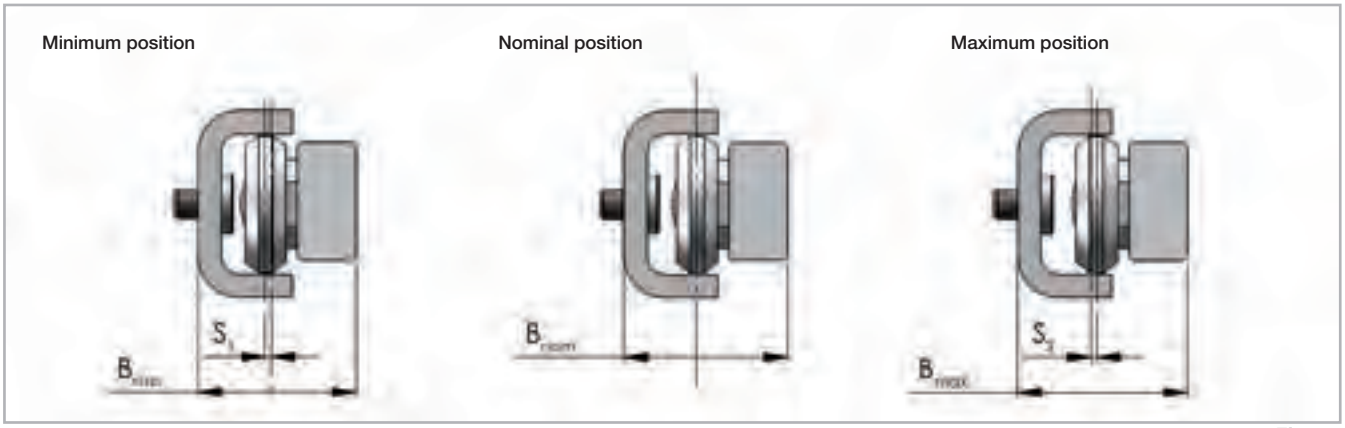

Fig. 47

Slider type (Version 4 with solid body)	S_1 [mm]	S_2 [mm]	B_{min} [mm]	B_{nom} [mm]	B_{max} [mm]
CEXU.../CESU20-60	0.6	0.6	17.65	18.25	18.85
CEXU.../CESU30-80	1	1	26.95	27.95	28.95
CEXU.../CESU45-120	1.75	1.75	35.50	37.25	39

Tab. 43

Guideline for the maximum angle deviation α, achievable with the longest guide rail

$$\alpha = \arctan \frac{S^*}{L}$$

S^* = sum of S_1 and S_2
L = length of the rail

Fig. 48

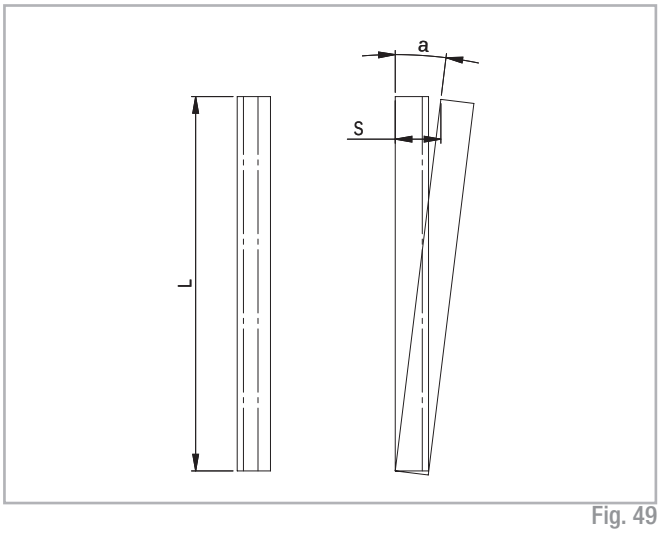

Fig. 49

Size	Rail length [mm]	Offset S* [mm]	Angle α [°]
20	3120	1.2	0.022
30	3120	2	0.037
45	3120	3.5	0.064

Tab. 44

TEN40+UEN40 self-aligning system

Used in pair with CEN-40 sliders in both rails, TEN-40 can be combined with UEN-40 to create a self-aligning system capable of tolerating alignment errors of up to 3.4 mm.

The slider in the TEN-40 guiding rail is rigidly connected, via the mobile element, to the sliders in the UEN-40 floating rail on the other side. The TEN-40 guiding rail ensures play-free linear motion. The slider in the UEN-40 floating rail is also play-free but able to move axially across the flat raceways. This system avoids overload on the sliders as the result of rail alignment error.

The limit of axial movement of CEN-40 sliders towards the inside of UEN-40 rails is determined by the size of the heads of the rail fixing screws (see figures below). In particular, Rollon's special flat head DIN 7991 screws permit approximately 1 mm of extra axial movement compared to standard ISO 7380 screws.

The limit of axial movement towards the outside of the UEN-40 rail is determined by the point of departure of the roller from the raceway. The limit specified in the catalogue guarantees sufficient contact between rollers and raceway to support rated load.



Min - Max axial movement

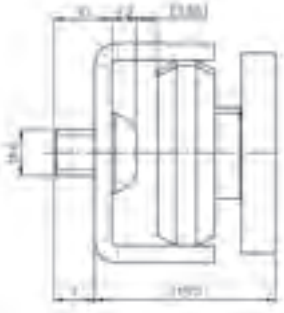

Limit towards outside with full load capacity

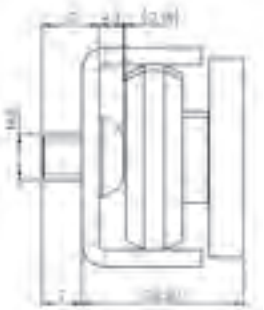

Limit towards inside of rail with standard ISO 7380 screws

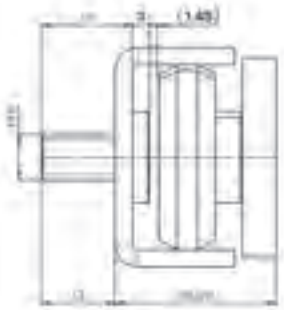

Limit towards inside of rail with TORX DIN 7991 screws

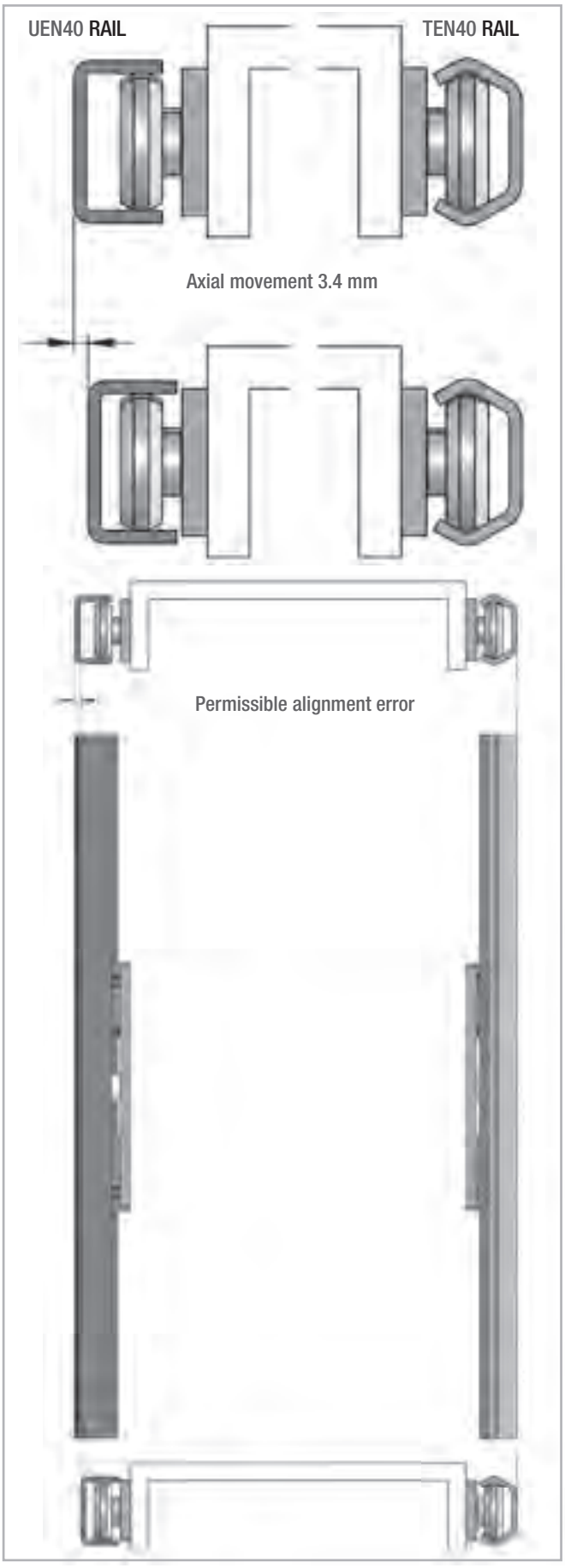

Fig. 50

Service life calculation TEN-TEP

The dynamic load capacity C is a conventional variable used for calculating the service life. This load corresponds to a nominal service life of 100 km. For values of the individual slider see pg.XR-5. Load capacities. The following formula (see fig. 51) links the calculated theoretical service life to the dynamic load capacity and the equivalent load:

$$L_{Km} = 100 \cdot \left(\frac{C}{P} \cdot \frac{f_c}{f_i} \cdot f_h\right)^3$$

L_{km} = theoretical service life (km)
C = dynamic load capacity (N)
P = effective equivalent load (N)
f_c = contact factor
f_i = application coefficient
f_h = stroke factor

Fig. 51

The equivalent load P corresponds in its effects to the sum of the forces and moments working simultaneously on a slider. If these different load components are known, P results as follows:

$$P = P_r + \left(\frac{P_a}{C_{0ax}} + \frac{M_1}{M_x} + \frac{M_2}{M_y} + \frac{M_3}{M_z}\right) \cdot C_{0rad}$$

Fig. 52

Here the external loads are assumed as constant in time. Brief loads, which do not exceed the maximum load capacities, do not have any relevant effect on the service life and can therefore be neglected.
The contact factor f_c refers to applications in which several sliders pass the same rail section. If two or more sliders move over the same point of a rail, the contact factor according to table 45 to be taken into account in the formula for calculation of the service life.

Number of sliders	1	2	3	4
f_c	1	0.8	0.7	0.63

Tab. 45

The application coefficient f_i takes into account the operational conditions in the service life calculation. It has a similar significance to the safety factor S_0 in the static load test. It is calculated as described in the following table:

	f_i
Neither shocks nor vibrations, smooth and low-frequency direction change; clean operating conditions; low speeds (<1 m/s)	1 - 1.5
Slight vibrations, average speeds (1 - 2.5 m/s) and average frequency of direction change	1.5 - 2
Shocks and vibrations, high speeds (> 2.5 m/s) and high-frequency direction change; extreme dirt contamination	2 - 3.5

Tab. 46

The stroke factor f_h takes into account the higher load of the raceways and rollers during short strokes on the same total length of run. The corresponding values are taken from the following graph (for strokes longer than 1 m, f_h =1):

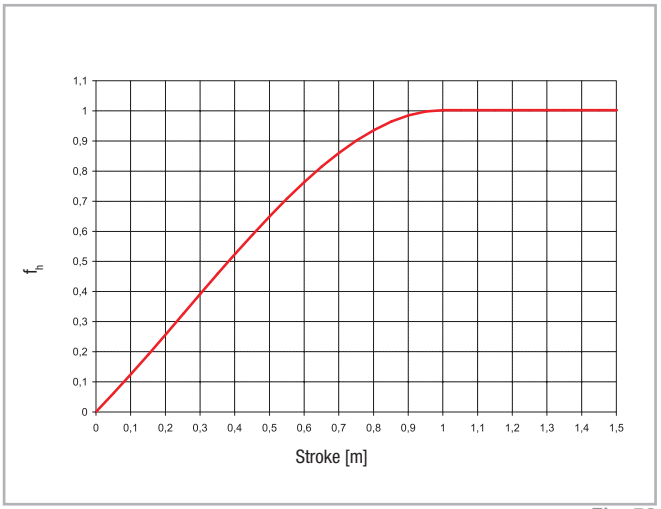

Fig. 53

Setting preload

If the product is delivered with the sliders in the rails, the sliders are already preloaded. If delivered separately, or if the sliders need to be installed in another rail, the sliders must be readjusted. In this case, follow the instructions below:

With flat key

(1) Wipe the raceways of any dirt and debris.
(2) If necessary, remove existing wipers and insert the sliders into the rails. Slightly loosen the fixing screw of the center roller pin.
(3) Position the slider(s) at the ends of the rail.
(4) For the U rails there must be a thin support (e.g. set key) under the ends of the slider body to ensure the horizontal alignment of the slider in the flat raceways.
(5) The included special flat key is inserted from the side between the rail and the slider and inserted onto the hexagonal or square shaft of the eccentric pin to be adjusted (see fig. 54).
(6) By turning the flat key clockwise, the eccentric roller is pressed against the upper raceway, thereby removing clearance and setting the correct preload. During this process, absence of play is desired; avoid setting a preload that is so high that it generates high friction and reduces service life.
(7) Hold the roller with the adjustment key in the desired position and carefully tighten the fixing screw. The exact tightening torque will be checked later.
(8) Move the slider in the rail and check the preload over the entire length of the rail. It should move easily and the slider should not have play at any location of the rail.
(9) Tighten the fixing screw with the specified tightening torque (see tab. 47), while holding the flat key and maintaining the angle position of the roller so as to not change the preload while tightening the screw. It is recommended to use thread locking compound.
(10) Now re-attach the existing wipers if desired.

With Allen Keys

(1) Verify that the raceways are clean and take the wipers off to obtain a more sensitive feeling for correct preload setting.
(2) Tighten the top-screw, but not too much, to allow a firm turning of the eccentric bottom-pivot, maintaining the roller tight to the slider body.
(3) Turn the eccentric pivot so that the roller is roughly aligned with the concentric rollers or slightly in the opposite direction of the concentric rollers.
(4) Lock the rail on a stable support, so hands are free. Insert the slider into the rail. Insert the Allen key into the pivot, through the rail fixing hole. Turn the Allen key slightly, so that the eccentric roller is coming in light contact with the raceways, opposite the fixed rollers. During the rotation, accompany the top-screw while rotating in the same direction with second Allen key, in order to avoid any loosening or change in preload setting.
(5) Move the slider along the whole rail length to find the part or point, where the slider moves with less friction. If any oscillation/ play is noted, the eccentric roller must be re-adjusted. Perfect preload setting is achieved, when the slider moves very smoothly and with no play at this point.
(6) Holding firm against the Allen key, engaged in eccentric pivot with one hand, while with another Allen key rotate and tighten the top-screw fastening the roller. Do not lock or unlock the eccentric roller by turning the pivot, always only act on the top screw to block or to ease the roller.
(7) It's possible to verify the amount of preload by slowly inserting the slider at the end of the rail. The inserting force is proportional to the preload.
(8) Then make final roller/screw tightening using a torque wrench, to assure right tightening torque according to the values in tab. 47, while maintaining the Allen key in pivot, to prevent any change of preload setting.

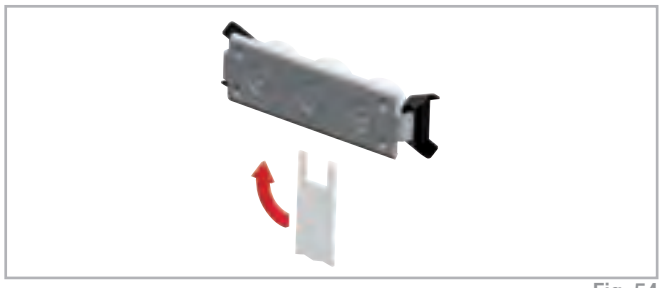

Fig. 54



Fig. 55

Size	Tightening torque [Nm]
20	3
26	7
30	7
40	10
45	12

Tab. 47

Use of radial ball bearing rollers

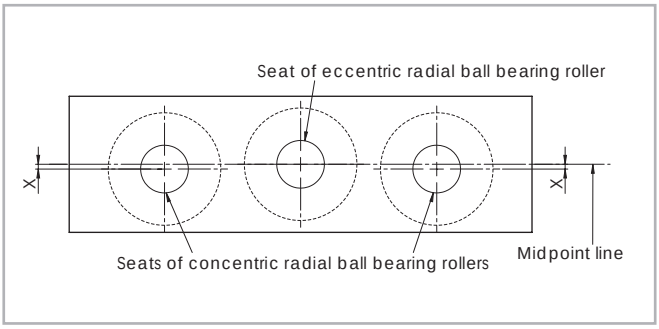

Fig. 56

Slider size	X [mm]
20	0.60
26	0.40
30*	0.65
40	0.90
45	0.60

* for TEN-30 X=0,45

Tab. 48

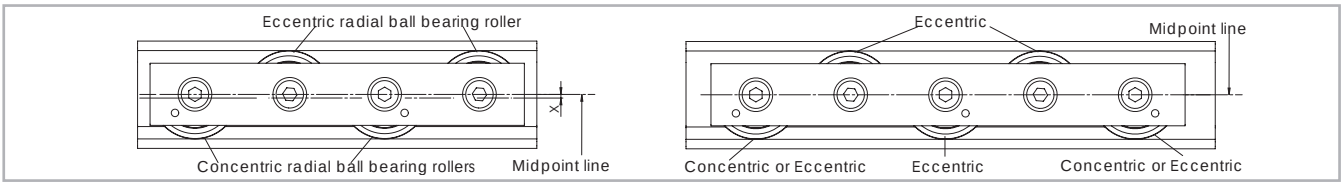

Fig. 57

If purchasing "Radial ball bearing rollers" to install on your own structure (see from p. XR-3 to XR-25) we advise:

- Using a maximum of 2 concentric radial ball bearing rollers
- Offset the seats of the concentric radial ball bearing rollers with respect to those of the eccentric radial ball bearing rollers according to the table (tab. 48).

Ordering key

Rail / slider system

TEX-	**960**	**/1/**	**CEX20-60**	**-2RS**
				Roller seal *see pg. XR-4 Performance characteristics*
			Slider type *see pg. XR-7, tab. 5 and 6/ pg. XR-9, tab. 9*	
		Number of sliders in one rail		
	Rail length in mm *see pg. XR-6, tab. 4 / pg.XR-8, tab. 8*			
Rail type *see pg. XR-6, tab. 3 / pg. XR-8, tab. 7*				

Ordering example: TEX-00960/1/CEX20-060-2RS

Hole pitch: 40-11 x 80-40

Notes on ordering: The rail length codes are always 5 digits, the slider length codes are always 3 digits; use zeroes as a prefix when lengths are shorter

Rail

TEX-	**30-**	**960**
		Rail length in mm *see pg. XR-6, tab. 4 / pg. XR-8, tab. 8*
	Size *see pg. XR-6, tab. 3 / pg. XR-8, tab. 7*	
Rail type *see pg. XR-6, tab. 5 / pg.XR-8, tab. 7*		

Ordering example: TEX-30-00960

Hole pattern: 40-11 x 80-40

Notes on ordering: The rail length codes are always 5 digits; use zeroes as a prefix when lengths are shorter

Slider

CES30-80	**-2Z**
	Roller seal *see pg. XR-6 Performance characteristics*
Slider type *see pg. XR-7, tab. 5 and 6/ pg. XR-9, tab. 9*	

Ordering example: CES30-080-2Z

Notes on ordering: The slider length codes are always 3 digits; use zeroes as a prefix when lengths are shorter

Accessories

Roller pins

CRPAX	**45**	**-2RS**	
		Roller seal	*see pg. XR-6 Performance characteristics*
	Size	*see pg. XR-11, tab. 13-15*	
Roller type	*see pg. XR-11, tab. 13-15*		

Ordering example: CRPAX45-2RS

Fixing screws

Rail type	Size	Ordering description
TEX / UEX	20	TORX® screw TC 18 M4x8 NIC
	26	TORX® screw TC 28 M5x10 NIC
	30	TORX® screw TC 28 M5x10 NIC
	40	TORX® screw TC 43 M8x16 NIC
	45	TORX® screw TC 43 M8x16 NIC
TES / UES	20	TORX® screw TC 18 M4x8
	26	TORX® screw TC 28 M5x10
	30	TORX® screw TC 28 M5x10
	40	TORX® screw TC 43 M8x16
	45	TORX® screw TC 43 M8x16
TEN/TEP	26	TORX® screw TC 28 M5x10
	30	TORX® screw TC 28 M5x10
	40	TORX® screw TC 43 M8x16
UEN	40	TORX® screw TC 43 M8x16

see pg. XR-27, fig. 45, tab. 42

Notes

ROLLON®
BY TIMKEN

Easyslide



Product explanation

Easyslide is a linear ball rail system (with caged ball bearings for the SN series or with recirculating ball bearings for the SNK series) with single or multiple sliders.



Fig. 1

The Easyslide series is a system of drawn steel linear rails with induction hardened raceways. The system consists of an “C” shaped linear profile rail, and one or more internal sliders with caged recirculating ball bearings.

The most important characteristics:

- Guide rails and sliders of SN series are made of cold-drawn bearing steel
- Ball cage is made of steel for the SN series
- Balls are made of hardened bearing steel
- Raceways of the guide rails and sliders are induction hardened (ground for the SNK series)
- Long service life
- With recirculating ball bearings for the SNK series

Preferred areas of application of the Easyslide product family:

- Transportation industry (e.g., exterior and interior rail and bus doors, seat adjustments, interior)
- Construction and machine technology (e.g., housings, protective covers)
- Medical technology (e.g., X-ray equipment, medical tables)
- Automotive technology
- Logistics (e.g., handling units)
- Packaging machines (e.g., beverage industry)
- Special machines

SN linear bearing, version 1, with single slider

This linear bearing consists of a guide rail and a slider that runs within the ball cage in the guide rail. High load capacities, compact cross-sections and simple and easy mounting characterize this series.



Fig. 2

SN linear bearing, version 2, with multiple independent sliders

Variant with several sliders, which each runs in its own ball cage, independent of each other, in the guide rail. Slider length and stroke for each slider can be different within one rail.



Fig. 3

SN linear bearing, version 3, with multiple synchronized sliders

Several sliders run in a common ball cage within the guide rails. The slider lengths can vary here as well and then form a total unit, which implements the corresponding stroke.



Fig. 4

SNK series linear rails with recirculating ball bearings.

The SNK series consists of a drawn steel C profile rail with hardened and ground raceways and of an internal slider with a recirculating ball bearing system. This product is extremely compact and boasts high load rating and great sliding properties.



Fig. 5

Technical data

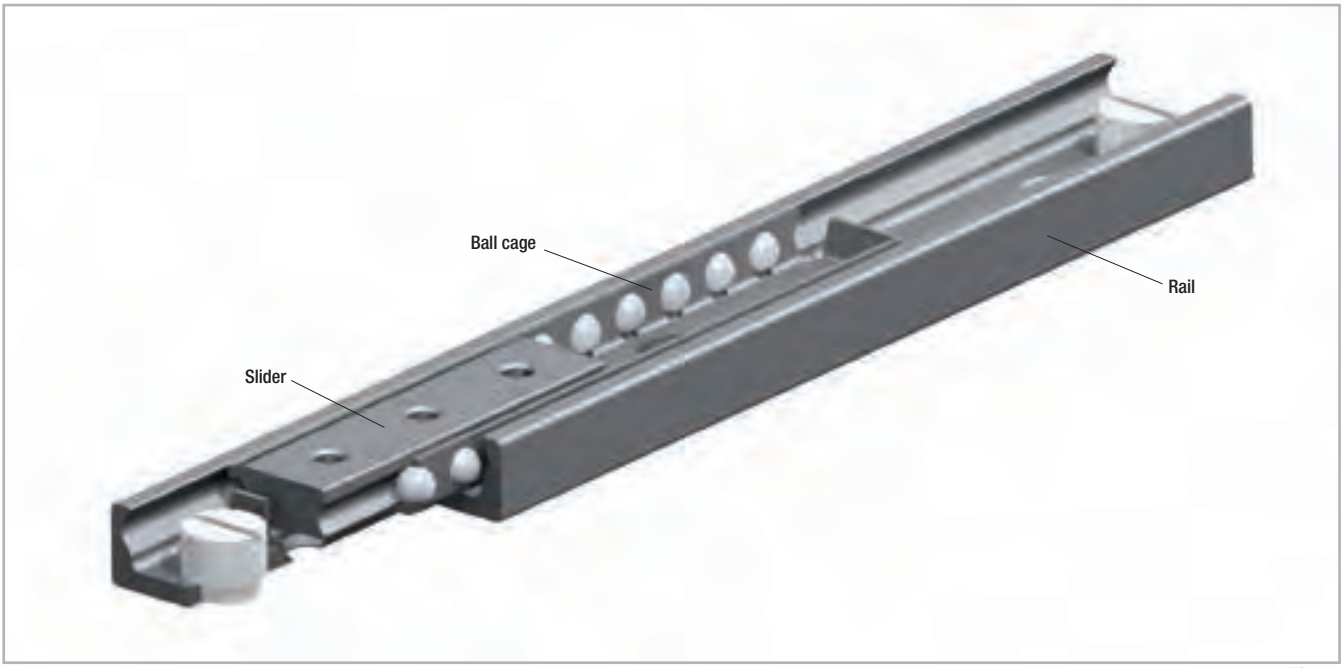

Fig. 6

Performance characteristics:

- Available sizes for SN: 22, 28, 35, 43, 63
- Sections available for the SNK series: 43
- Inductive raceways hardened and ground for the SNK series
- Rails and sliders are made of cold-drawn bearing steel
- Balls are made of hardened bearing steel
- Max. operating speed 1.5 m/s (SNK)
- Temperature range: from -20 °C to +170 °C for the SN series
  from -20° to 70° for the SNK series
- Electrolytic zinc-plating as per ISO 2081; increased anticorrosive protection on request (see Chapter 4, Technical instructions, pg. 16 Anticorrosive protection)
- Linear accuracy 0.1 mm/m stroke
- 2 different types of preload

Remarks:

- SN can only be horizontally mounted, high performance SNK can be horizontally and vertically mounted.
- External stops are recommended
- Fixing screws of property class 10.9 must be used for all linear bearings

Dimensions and load capacity

SN

SN linear bearing, version 1, with single slider

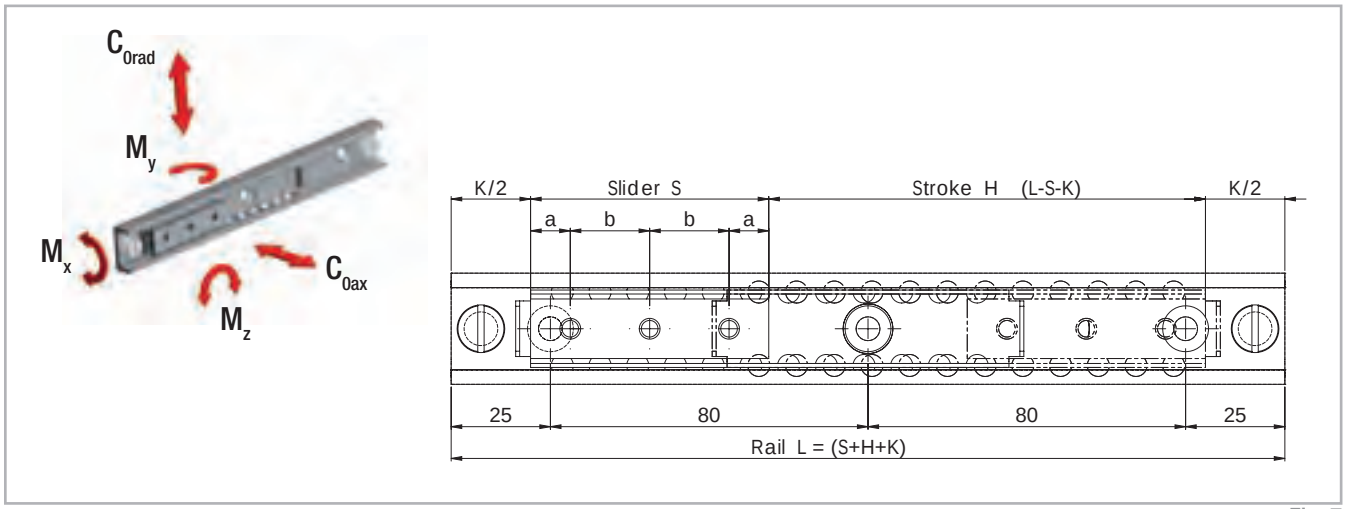

Fig. 7

To ensure that all fixing holes of the rail are accessible, S must be < L/2 - K.
To ensure proper smooth movement it is necessary that H ≤ 7S.

Type	Size	Slider								
						Load capacities and moments				
		Length S [mm]	a [mm]	b [mm]	No. of holes	C_{0rad} [N]	C_{0ax} [N]	M_x [Nm]	M_y [Nm]	M_z [Nm]
SN	22	40	10	20	2	1320	924	4.4	6	9
		60			3	1980	1386	6.7	14	20
		80			4	2640	1848	8.9	25	35
		130	25	80	2	4290	3003	14.4	65	93
		210			3	6930	4851	23.3	170	243
		290			4	9570	6699	32.2	324	463

Tab. 1

		Rail	
Type	Size	Length L [mm]	K [mm]
SN	22	130 - 210 - 290 - 370 - 450 - 530 - 610 - 690 - 770 - 850 - 930 - 1010 - 1090 - 1170	30

Tab. 2

Type	Size	Slider								
						Load capacities and moments				
		Length S [mm]	a [mm]	b [mm]	No. of holes	C_{0rad} [N]	C_{0ax} [N]	M_x [Nm]	M_y [Nm]	M_z [Nm]
SN	28	60	10	20	3	3480	2436	17.1	24	35
		80			4	4640	3248	22.7	43	62
		130	25	80	2	7540	5278	36.9	114	163
		210			3	12180	8526	59.7	298	426
		290			4	16820	11774	82.4	569	813
		370			5	21460	15022	105.1	926	1323
		450			6	26100	18270	127.9	1370	1958

Tab. 3

		Rail	
Type	Size	Length L [mm]	K [mm]
SN	28	130 - 210 - 290 - 370 - 450 - 530 - 610 - 690 - 770 - 850 - 930 - 1010 - 1090 - 1170 - 1250 - 1330 - 1410 - 1490 - 1570 -1650	40

Tab. 4

Type	Size	Slider								
						Load capacities and moments				
		Length S [mm]	a [mm]	b [mm]	No. of holes	C_{0rad} [N]	C_{0ax} [N]	M_x [Nm]	M_y [Nm]	M_z [Nm]
SN	35	130	25	80	2	9750	6825	47.2	148	211
		210			3	15750	11025	76.3	386	551
		290			4	21750	15225	105.3	736	1051
		370			5	27750	19425	134.4	1198	1711
		450			6	33750	23625	163.4	1772	2531
		530			7	39750	27825	192.5	2458	3511
		610			8	45750	32025	221.6	3256	4651

Tab. 5

		Rail	
Type	Size	Length L [mm]	K [mm]
SN	35	290 - 370 - 450 - 530 - 610 - 690 - 770 - 850 - 930 - 1010 - 1090 - 1170 - 1250 - 1330 - 1410 - 1490 - 1570 - 1650 - 1730 - 1810	50

Tab. 6

Type	Size	Slider								
						Load capacities and moments				
		Length S [mm]	a [mm]	b [mm]	No. of holes	C_{0rad} [N]	C_{0ax} [N]	M_x [Nm]	M_y [Nm]	M_z [Nm]
SN	43	130	25	80	2	13910	9737	96	211	301
		210			3	22470	15729	155.1	551	786
		290			4	31030	21721	214.1	1050	1500
		370			5	39590	27713	273.2	1709	2441
		450			6	48150	33705	332.3	2528	3611
		530			7	56710	39697	391.4	3507	5009
		610			8	65270	45689	450.4	4645	6636

Tab. 7

		Rail	
Type	Size	Length L [mm]	K [mm]
SN	43	290 - 370 - 450 - 530 - 610 - 690 - 770 - 850 - 930 - 1010 - 1090 - 1170 - 1250 -1330 - 1410 - 1490 - 1570 - 1650 - 1730 - 1810 - 1890 - 1970	50

Tab. 8

Type	Size	Slider								
						Load capacities and moments				
		Length S [mm]	a [mm]	b [mm]	No. of holes	C_{0rad} [N]	C_{0ax} [N]	M_x [Nm]	M_y [Nm]	M_z [Nm]
SN	63	130	25	80	2	26000	18200	238.8	394	563
		210			3	42000	29400	385.8	1029	1470
		290			4	58000	40600	532.8	1962	2803
		370			5	74000	51800	679.8	3194	4563
		450			6	90000	63000	826.7	4725	6750
		530			7	106000	74200	973.7	6554	9363
		610			8	122000	85400	1120.7	8682	12403

Tab. 9

		Rail	
Type	Size	Length L [mm]	K* [mm]
SN	63	610 - 690 - 770 - 850 - 930 - 1010 - 1090 - 1170 - 1250 - 1330 - 1410 - 1490 - 1570 - 1650 - 1730 - 1810 - 1890 - 1970	80

Tab. 10

* For systems of versions 2 in size 63 with two independent sliders, the K dimension changes from 80 mm to 110 mm and for each additional slider by another 30 mm

Version 2 with multiple independent sliders



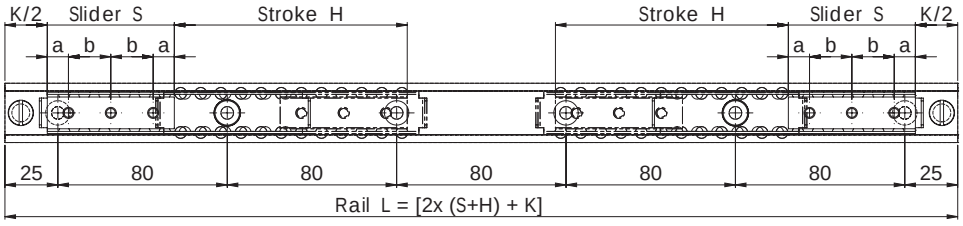

For systems of versions 2 in size 63 with two independent sliders, the K dimension changes from 80 mm to 110 mm and for each additional slider by another 30 mm

Fig. 8

Version 2 is a variant of version 1 with several independent sliders. The total load capacity is based on the number of sliders in the rail and on their lengths. The length and stroke of the individual sliders can be different.

To ensure that all fixing holes of the rail are accessible, S must be < L/2 - K.

To ensure proper smooth movement it is necessary that H ≤ 7S.

Version 3 with multiple synchronized sliders

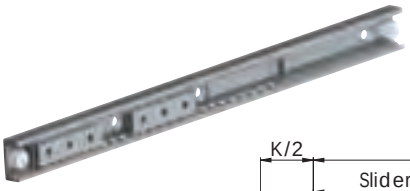

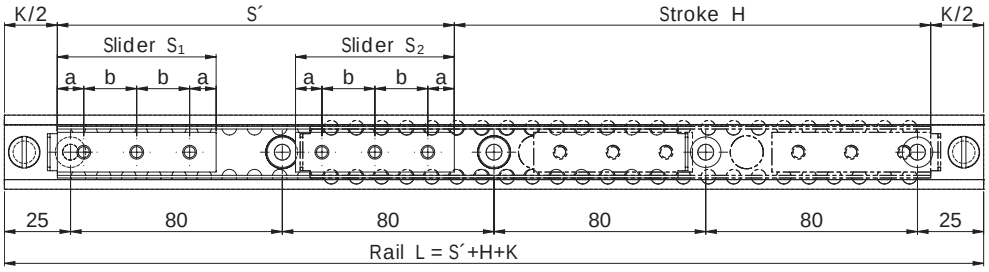

Fig. 9

Version 3 is a variant of version 1 with several synchronized sliders. The total load capacity is based on the number of sliders in the rail. The length of the individual sliders can therefore vary. To ensure that all fixing holes of the rail are accessible, S must be < L/2 - K.

To ensure proper smooth movement it is necessary that H ≤ 7S.

SN

SN 22-43

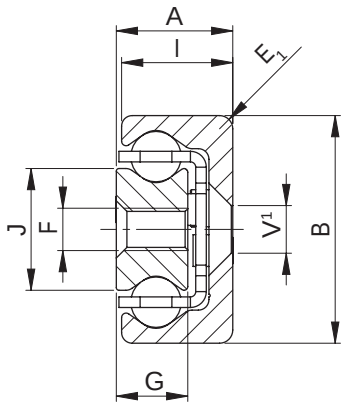

SN 63

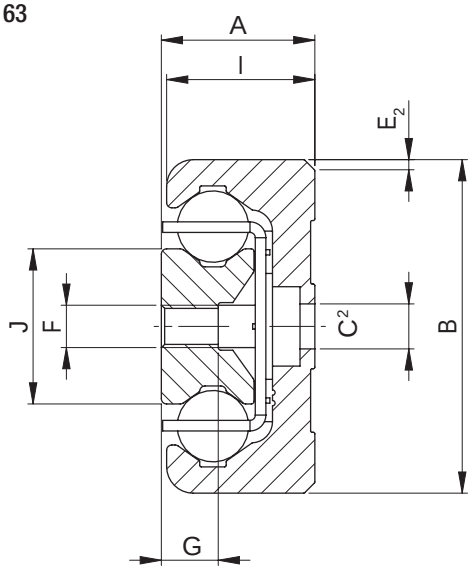

[1] Fixing holes (V) for countersunk head screws according to DIN 7991
[2] Fixing holes (C) for socket cap screws according to DIN 7984. Alternative fixing with Torx® screws in special design with low head (on request)

Fig. 10

Type	Size	Cross-section										Rail weight [kg/m]	Slider weight [kg/m]
		A [mm]	B [mm]	I [mm]	J [mm]	G [mm]	E_1 [mm]	E_2 [°]	V	C	F		
SN	22	11	22	10.25	11.3	6.5	3	-	M4	-	M4	0.7	1
	28	13	28	12.25	15	7.5	1	-	M5	-	M5	1	1.5
	35	17	35	16	15.8	10	2	-	M6	-	M6	1.8	2.5
	43	22	43	21	23	13.5	2.5	-	M8	-	M8	2.6	5
	63	29	63	28	29.3	10.5	-	2 x 45	-	M8	M8	6.1	6.9

Tab. 11

SNK

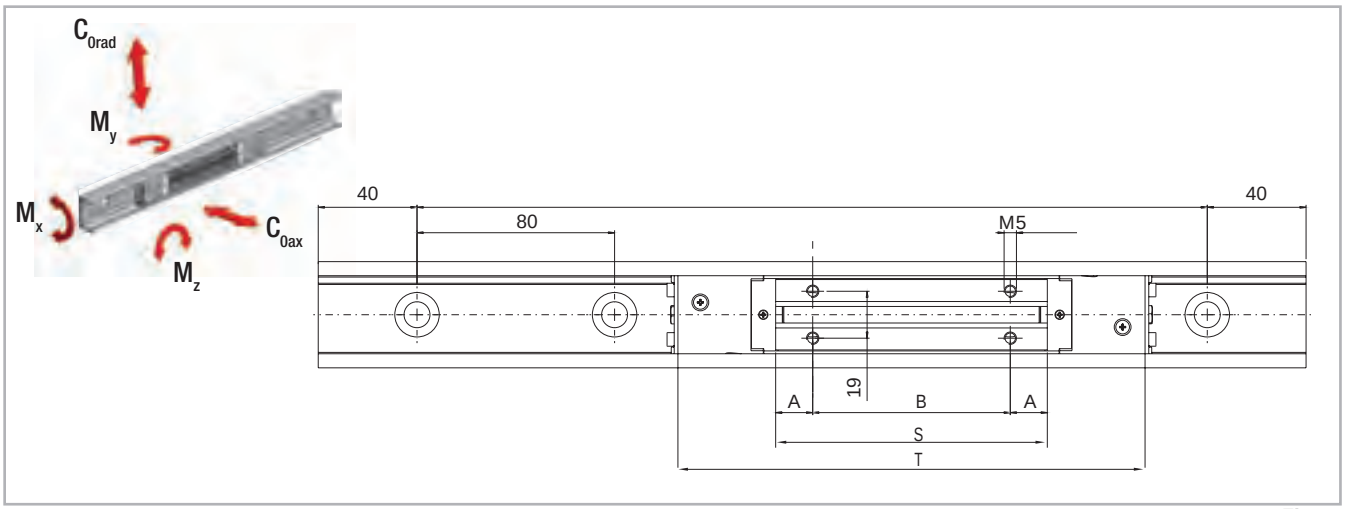

Fig.11

Type	Size	Slider									
							Load capacities and moments				
		Length S [mm]	Length T [mm]	A [mm]	B [mm]	N° of holes	C_{0rad} [N]	C_{0ax} [N]	M_x [Nm]	M_y [Nm]	M_z [Nm]
SNK	43	110	198	15	80	4	7842	5489	75	95	136
		150	238	15	60	6	10858	7600	105	182	261

Tab. 12

		Rail
Type	Size	Length L [mm]
TSC/TSV	43	320-400-480-560-640-720-800-880-960-1040-1120-1200 -1280-1360-1440-1520-1600-1680-1760-1840-1920-2000

For greater lengths, see the paragraph “SNK Jointed Rails on p. ES-18”

Tab. 13

SNK

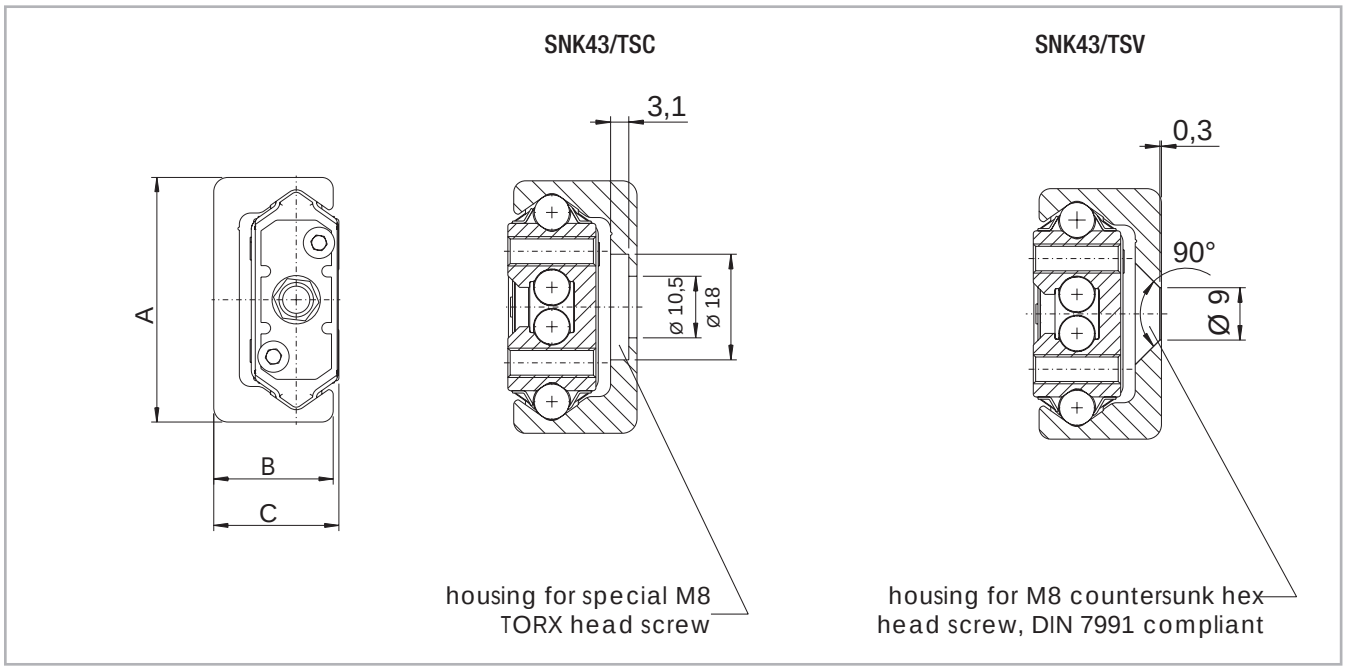

Fig. 12

Type	Size	Cross-section			Rail weight [kg/m]	Slider weight 110 [g]	Slider weight 150 [g]
		A [mm]	B [mm]	C [mm]			
TSC/TSV	43	43	21	22	2,6	360	550

Tab. 14

Technical instructions

Static load

The maximum static loads of the Easyslide series are based on the slider length and are listed in the tables of the previous pages. These load capacities are valid for a loading point of forces and moments in the center of the slider (for off-center loading, see ES-13). The load capacities are independent of the position of the slider inside the rails. During the static tests the radial load capacity, C_{0rad}, the axial load capacity, C_{0ax}, and moments M_x, M_y and M_z indicate the maximum permissible values of the loads. Higher loads negatively affect the running properties and the total mechanical strength may be compromised. A safety factor, S_0, is used to verify the static load, which takes into account the basic parameters of the application and is defined in more detail in the following table:

Safety factor S_0

Neither shocks nor vibrations, smooth and low-frequency reverse, high assembly accuracy, no elastic deformations	1 - 1.5
Normal installation conditions	1.5 - 2
Shocks and vibrations, high-frequency reverse, significant elastic deformation	2 - 3.5

Tab. 15

The ratio of the actual load to maximum permissible load may be as large as the reciprocal of the accepted safety factor, S_0, at the most.

$$\frac{P_{0rad}}{C_{0rad}} \leq \frac{1}{S_0} \qquad \frac{P_{0ax}}{C_{0ax}} \leq \frac{1}{S_0} \qquad \frac{M_1}{M_x} \leq \frac{1}{S_0} \qquad \frac{M_2}{M_y} \leq \frac{1}{S_0} \qquad \frac{M_3}{M_z} \leq \frac{1}{S_0}$$

Fig. 13

The formulas above apply for a single load case. If there are two or more of the described forces simultaneously, the following check must be made:

$$\frac{P_{0rad}}{C_{0rad}} + \frac{P_{0ax}}{C_{0ax}} + \frac{M_1}{M_x} + \frac{M_2}{M_y} + \frac{M_3}{M_z} \leq \frac{1}{S_0}$$

P_{0rad} = effective radial load
C_{0rad} = permissible radial load
P_{0ax} = effective axial load
C_{0ax} = permissible axial load
M_1 = effective moment in the x-direction
M_x = permissible moment in the x-direction
M_2 = effective moment in the y-direction
M_y = permissible moment in the y-direction
M_3 = effective moment in the z-direction
M_z = permissible moment in the z-direction

Fig. 14

Off-center load P of the slider (SN series):

For an off-center load of the slider, the different load distribution on the balls must be accounted for with a reduction of the load capacity C. As shown in the diagram to the right, this reduction of the distance, d, from the loading point is dependent on the slider center. The value, q, is the position factor, the distance, d, is expressed in fractions of slider length S. The permissible load, P, decreases as follows:

$P = q \cdot C_{0rad}$	for a radial load
$P = q \cdot C_{0ax}$	for an axial load

Fig. 15

For the static load and the service life calculation, P_{0rad} and P_{0ax} must be replaced by the equivalent values calculated as follows (see fig. 16):

$P_{0rad} = \frac{P}{q}$	if the external load, P, acts radially
$P_{0ax} = \frac{P}{q}$	if the external load, P, acts axially

Fig. 16

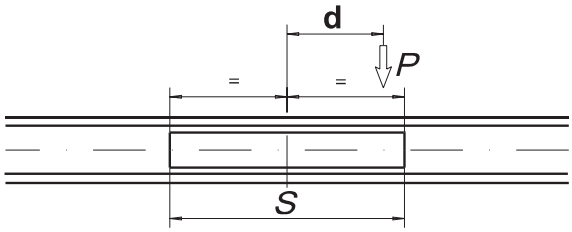

Fig. 17

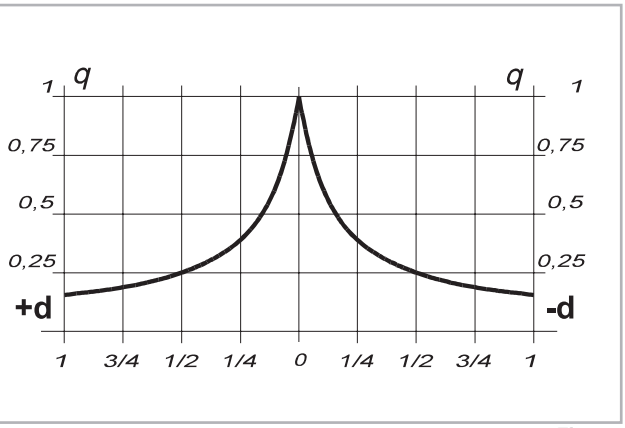

Fig. 18

Service life

The service life of a linear bearing depends on several factors, such as effective load, operating speed, installation precision, occurring impacts and vibrations, operating temperature, ambient conditions and lubrication. The service life is defined as the time span between initial operation and the first fatigue or wear indications on the raceways.

In practice, the end of the service life must be defined as the time of bearing decommissioning due to its destruction or extreme wear of a component.

This is taken into account by an application coefficient (f_i in the formula below), so the service life consists of:

Series SN

$$L_{km} = 100 \cdot \left(\frac{C}{W} \cdot \frac{1}{f_i} \right)^3$$

L_{km} = calculated service life (km)
C = dynamic load capacity (N) = C_{0rad}
W = equivalent load (N)
f_i = application coefficient (see tab. 17)

Fig. 19

Series SNK

$$L_{Km} = 100 \cdot \left(\frac{C}{W} \cdot \frac{f_c}{f_i} \cdot f_h \right)^3$$

L_{km} = theoretical service life (km)
C = dynamic load capacity (N) = C_{0rad}
W = effective equivalent load (N)
f_c = contact factor
f_i = application coefficient
f_h = stroke factor

Fig. 20

The stroke factor f_h takes into account the higher load of the raceways and rollers during short strokes on the same total length of run. The corresponding values are taken from the following graph (for strokes longer than 1 m, $f_h = 1$):

Number of sliders	1	2	3	4
f_c	1	0.8	0.7	0.63

Tab. 16

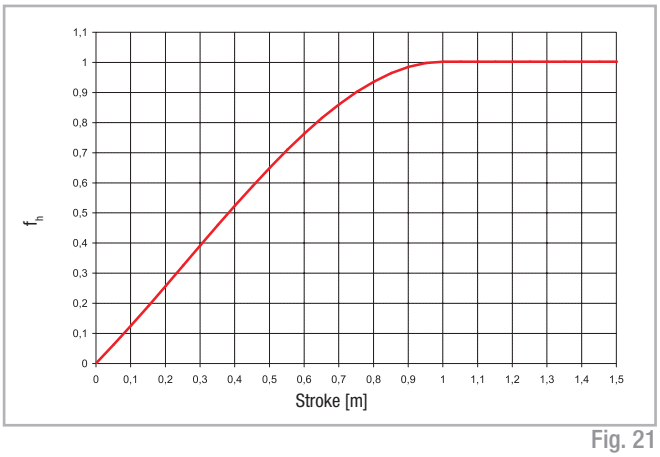

Fig. 21

Application coefficient f_i

Neither impacts nor vibrations, smooth and low-frequency direction change, clean operating conditions, low speed (<0.5 m/s)	1 - 1.5
Slight vibrations, average speeds (between 0.5 and 0.7 m/s) and average direction change	1.5 - 2
Impacts and vibrations, high-frequency direction change, high speeds (>0.7 m/s), very dirty environment	2 - 3.5

Tab. 17

If the external load, P, is the same as the dynamic load capacity, C_{0rad}, (which must never be exceeded), the service life at ideal operating conditions ($f_i = 1$) amounts to 100 km. Naturally, for a single load P, the following applies: $W = P$. If several external loads occur simultaneously, the equivalent load is calculated as follows:

$$W = P_{rad} + \left(\frac{P_{ax}}{C_{0ax}} + \frac{M_1}{M_x} + \frac{M_2}{M_y} + \frac{M_3}{M_z} \right) \cdot C_{0rad}$$

Fig. 22

Clearance and preload

The linear ball bearings of the SN and SNK series are mounted as standard with no play. For more information, please contact Rollon technical support.

Preload classes		
Increased clearance	**Light clearance**	**Increased preload**
G_1	Standard	K_1

Tab. 18

** for higher preload, contact Rollon technical support.*

Coefficient of friction

With correct lubrication and installation on level and rigid surfaces and sufficient parallelism for rail pairs, the friction value is less than or equal to 0.01. This value can vary depending on the installation situation (see pg. ES-19, Instructions for use). For the SNK series, the coefficient of friction is equal to or less than 0.06.

Linear accuracy

With installation of the rails using all bolts on a perfectly plane support surface with the fixing holes in a straight line, the linear accuracy of the sliders to an external reference results from the following equation:

$$\boxed{//} = \frac{\sqrt{H}}{300}\ (mm)$$

H = Stroke

Fig. 23

Speed

The linear bearings of the SN series can be used up to an operating speed of 0.8 m/s (31.5 in/s). With high-frequency direction changes and the resulting high accelerations, as well as with long ball cages, there is a risk of cage creep (see pg. ES-19, Instructions for use). The SNK series rails, on the other hand, reach a maximum speed of 1.5 m/s, and there is no risk of cage creep.

Temperature

The SN series can be used in ambient temperatures from -20 °C to +170 °C (-4 °F to +338 °F). The SNK series can be used at ambient temperatures between -20 °C and + 70 °C. A lithium lubricant for high operating temperatures is recommended for temperatures above +130 °C (+266 °F).

Anticorrosive protection

- The SN series standard anticorrosive protection is electrolytic zinc plating in accordance with ISO 2081. If increased anticorrosive protection is required, chemically nickel plated rails and stainless steel ball bearings are available.
- Numerous application-specific surface treatments are available upon request, e.g., FDA-approved nickel plating for use in the food industry. For more information, please contact Rollon technical support.

Lubrication SN

Recommended lubrication intervals are heavily dependent upon the ambient conditions. Under normal conditions, lubrication is recommended after 100 km operational performance or after an operating period of 6 months. In critical application cases the interval should be shorter. Please clean the raceways carefully before lubrication. Raceways and spaces of the ball cage are lubricated with a lithium lubricant of average consistency (roller bearing lubricant).

Different lubricants are available on request for special applications:

- FDA-approved lubricant for use in the food industry
- specific lubricant for clean rooms
- specific lubricant for the marine technology sector
- specific lubricant for high and low temperatures

For specific information, contact Rollon technical support.

Under normal conditions, correct lubrication:

- reduces friction
- reduces wear
- reduces stress on contact surfaces due to elastic deformation
- reduces noise during operation
- increases the regularity of the rolling movement

Lubrication SNK

Lubrication when using N-sliders SNK43

The SNK43 sliders are fitted with a self lubricating kit provided to periodically lubricate the slider.

This provides a progressive release of lubricant (see tab. 19) on the raceway during operation of the slider. The expected service life is up to 2 million cycles, depending on the type of application. The zerk fittings (see fig. 24) provide the lubrication.

Different lubricants are available on request for special applications:

- FDA-approved lubricant for use in the food industry
- specific lubricant for clean rooms
- specific lubricant for the marine technology sector
- specific lubricant for high and low temperatures

For specific information, contact Rollon technical support.

Lubricant	Thickening agent	Temperature range [°C]	Kinematic viscosity 40°C [mm²/s]
Mineral oil	Lithium soap	-30... to +120	approx 110
Roller bearing lubricant	Lithium soap	-30 to +170	approx 160

Tab. 19

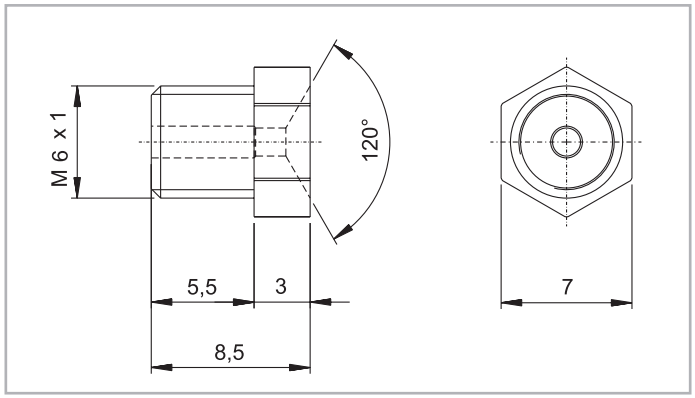

Grease applicator M6x1 DIN 3405 compliant

Fig. 24

Fixing screws

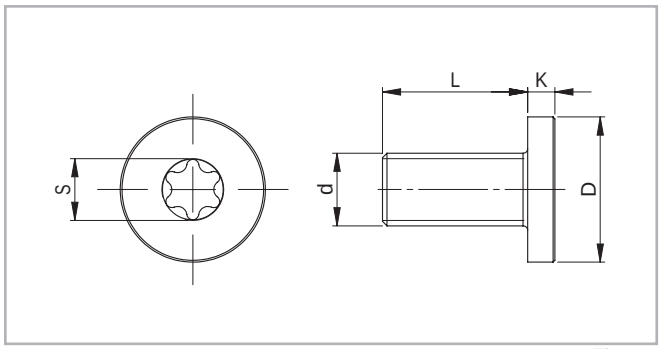

Fig. 25

The rails of the SN series in sizes 22 to 43 mm are fixed with countersunk head screws according to DIN 7991.
The SNK43 series rails are fastened with countersunk head screws according to DIN 7991 or with Torx® head screws (special design, see fig. 25).
The Torx® screws for the rails variant TSC are included.

Size	Screw type	d	D [mm]	L [mm]	K [mm]	S	Tightening torque
63	M8 x 20	M8 x 1.25	13	20	5	T40	34,7
SNK43	M8 x 16	M8 x 1,25	16	16	3	T40	22

Tab. 20

Recommended Standard fixing screw tightening torques

Property class	Size	Tightening torque [Nm]
10.9	22	3
	28	6
	35	10
	43	25
	63	30

Tab. 21

A support of the rail sides is not strictly necessary, but it helps reduce stress on the screws and increases rigidity.

Rail Bracket

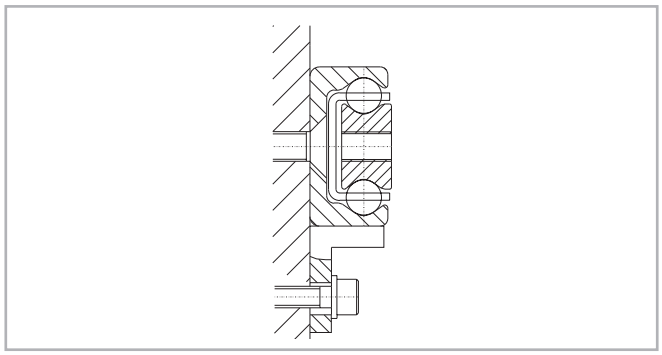

Fig. 26

A support is advisable if the safety coefficient of the application is equal to or lower than 1.5.

Installation instructions

- The internal stops on the SN series are used to stop the unloaded slider and the ball cage. Please use external stops as end stops for a loaded system.
- Prepare a sufficient bevel on the threaded fixing holes, according to the following table:

Size	Bevel (mm)
22	0,5 x 45°
28	1 x 45°
35	1 x 45°
43	1 x 45°
63	1 x 45°

Tab. 22

- To achieve optimum running properties, high service life and rigidity, it is necessary to fix the linear bearings with all accessible holes on a rigid and level surface.

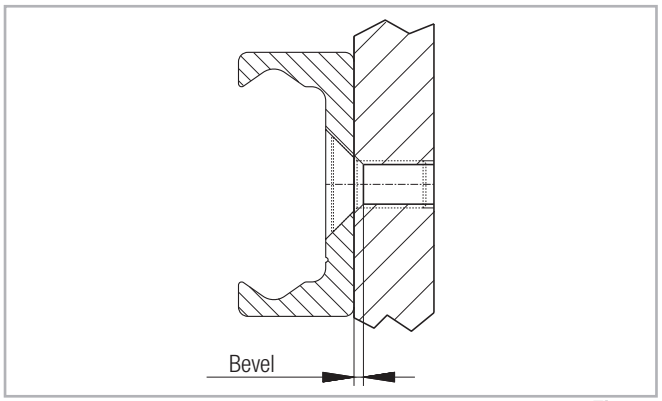

Fig. 27

SNK Joined Rails

If long guide rails are required, two or more rails can be joined to the desired length. When putting guide rails together, be sure that the register marks shown in fig. 28 are positioned correctly.

These are fabricated asymmetric for parallel application of joined guide rails, unless otherwise specified.

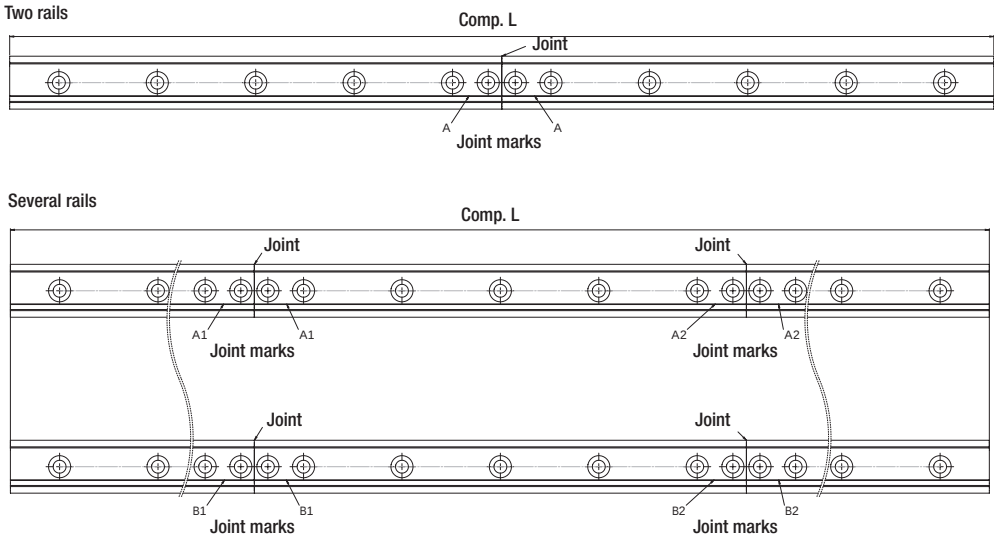

Fig. 28

General information

The maximum available rail length in one piece is indicated in table 13 on page ES-10. Longer lengths are achieved by joining two or more rails (joined rails).

Rollon machines the rail ends at a right angle to the impact surfaces and marks them. Additional fixing screws are included with the delivery, which ensure a problem-free transition of the slider over the joints, if the following installation procedures are followed. Two additional threaded holes are required in the load-bearing structure. The included end fixing screws correspond to the installation screws for the rails for cylindrical counterbores. The alignment fixture for aligning the rail joint can be ordered using the designation given in the table (tab. 23).

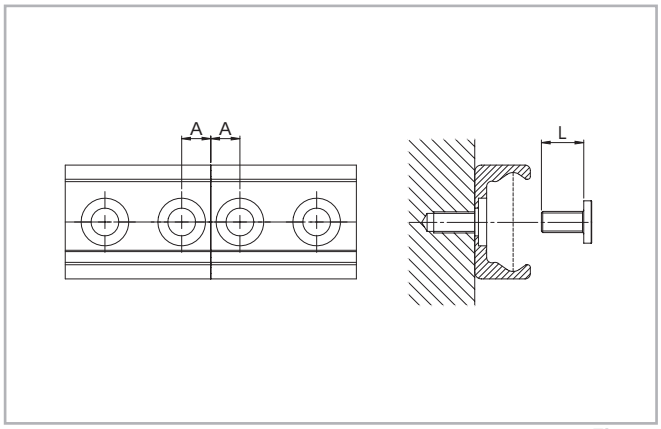

Fig. 29

Rail type	A [mm]	Threaded hole (load-bearing structure)	Screw type	L [mm]	Alignment fixture
TSC/TSV	11	M8	see pg. ES-17	16	AT43

Tab. 23

SN instructions for use

- For linear bearings of the SN series, the sliders are guided through a ball cage inside the rails. When the sliders run their course relative to the rails, the ball cage moves along for half the slider stroke. The stroke ends as soon as the slider reaches the end of the cage.
  Normally the cage moves synchronously to the balls at half the speed of the slider. Any occurring cage slip affects the synchronous movement of the ball cage negatively, causing it to reach the internal stops prematurely (cage creep). This reduces the stroke. However, the stroke value can be normalized at any time by moving the slider to the stop in the stopped cage. This moving of the slider relative to the cage will have increased resistance, which is dependent on the working load.
- The causes of cage creep can be installation accuracy, dynamics, and load changes. The effects can be minimized by observing the following advice:
  - The stroke should always remain constant and come as close as possible to the nominal stroke of the linear bearing.
  - For applications with various strokes, make sure that the drive is sufficiently dimensioned to guarantee a movement of the slider relative to the cage. A coefficient of friction of 0.1 should be calculated for this.
  - Another possibility is to include a maximum stroke without load in the working cycle in order to resynchronize the slider and ball cage.

  Parallelism errors or inaccuracies in the installation or in the mounting surfaces of mounted pairs can influence the cage creep.
- Series SN linear bearings should only be used for horizontal movement.

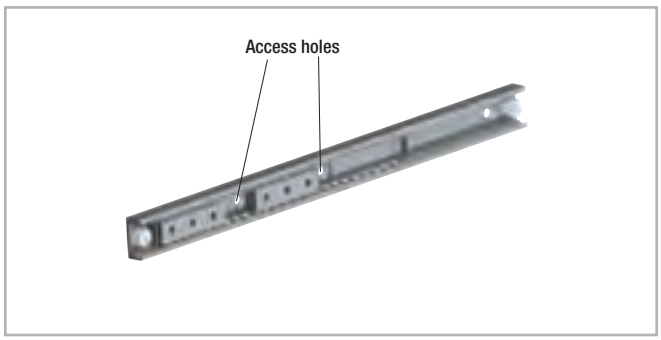

Fig. 30

If the bearing cage covers one or more fixing holes for the rail, access holes are made in the cage. The number and position of the holes can vary in different supplies.
Access to all fixing screws of the rail is guaranteed in all cases by positioning the cage aligned with the holes.

SNK instructions for use

- SNK: Always handle the slider out of the rail by its plastic retainer to prevent ball bearings from escaping.

SN Standard configurations

Size 22

Ordering description	Slider	Stroke	Rail
SN22-40-60-130	40	60	130
SN22-40-140-210	40	140	210
SN22-40-220-290	40	220	290
SN22-60-40-130	60	40	130
SN22-60-120-210	60	120	210
SN22-60-200-290	60	200	290
SN22-60-280-370	60	280	370
SN22-60-360-450	60	360	450
SN22-80-100-210	80	100	210
SN22-80-180-290	80	180	290
SN22-80-260-370	80	260	370
SN22-80-340-450	80	340	450
SN22-80-420-530	80	420	530
SN22-80-500-610	80	500	610
SN22-130-130-290	130	130	290
SN22-130-210-370	130	210	370
SN22-130-290-450	130	290	450
SN22-130-370-530	130	370	530
SN22-130-450-610	130	450	610
SN22-130-530-690	130	530	690
SN22-130-610-770	130	610	770
SN22-130-690-850	130	690	850
SN22-130-770-930	130	770	930
SN22-130-850-1010	130	850	1010
SN22-210-210-450	210	210	450
SN22-210-290-530	210	290	530
SN22-210-370-610	210	370	610
SN22-210-450-690	210	450	690
SN22-210-530-770	210	530	770
SN22-210-610-850	210	610	850
SN22-210-690-930	210	690	930
SN22-210-770-1010	210	770	1010
SN22-210-930-1170	210	930	1170
SN22-290-290-610	290	290	610
SN22-290-370-690	290	370	690
SN22-290-450-770	290	450	770
SN22-290-530-850	290	530	850
SN22-290-610-930	290	610	930
SN22-290-690-1010	290	690	1010
SN22-290-850-1170	290	850	1170

Tab. 24

Size 28

Ordering description	Slider	Stroke	Rail
SN28-60-30-130	60	30	130
SN28-60-110-210	60	110	210
SN28-60-190-290	60	190	290
SN28-60-270-370	60	270	370
SN28-60-350-450	60	350	450
SN28-80-90-210	80	90	210
SN28-80-170-290	80	170	290
SN28-80-250-370	80	250	370
SN28-80-330-450	80	330	450
SN28-80-410-530	80	410	530
SN28-80-490-610	80	490	610
SN28-130-120-290	130	120	290
SN28-130-200-370	130	200	370
SN28-130-280-450	130	280	450
SN28-130-360-530	130	360	530
SN28-130-440-610	130	440	610
SN28-130-520-690	130	520	690
SN28-130-600-770	130	600	770
SN28-130-680-850	130	680	850
SN28-130-760-930	130	760	930
SN28-130-840-1010	130	840	1010
SN28-210-200-450	210	200	450
SN28-210-280-530	210	280	530
SN28-210-360-610	210	360	610
SN28-210-440-690	210	440	690
SN28-210-520-770	210	520	770
SN28-210-600-850	210	600	850
SN28-210-680-930	210	680	930
SN28-210-760-1010	210	760	1010
SN28-210-920-1170	210	920	1170
SN28-210-1080-1330	210	1080	1330
SN28-290-280-610	290	280	610
SN28-290-360-690	290	360	690
SN28-290-440-770	290	440	770
SN28-290-520-850	290	520	850
SN28-290-600-930	290	600	930
SN28-290-680-1010	290	680	1010
SN28-290-840-1170	290	840	1170
SN28-290-1000-1330	290	1000	1330
SN28-290-1160-1490	290	1160	1490
SN28-370-360-770	370	360	770
SN28-370-440-850	370	440	850
SN28-370-520-930	370	520	930
SN28-370-600-1010	370	600	1010
SN28-370-760-1170	370	760	1170
SN28-370-920-1330	370	920	1330
SN28-370-1080-1490	370	1080	1490
SN28-450-440-930	450	440	930
SN28-450-520-1010	450	520	1010
SN28-450-680-1170	450	680	1170
SN28-450-840-1330	450	840	1330
SN28-450-1000-1490	450	1000	1490
SN28-450-1160-1650	450	1160	1650

Tab. 25

Size 35

Ordering description	Slider	Stroke	Rail
SN35-130-110-290	130	110	290
SN35-130-190-370	130	190	370
SN35-130-270-450	130	270	450
SN35-130-350-530	130	350	530
SN35-130-430-610	130	430	610
SN35-130-510-690	130	510	690
SN35-130-590-770	130	590	770
SN35-130-670-850	130	670	850
SN35-130-750-930	130	750	930
SN35-130-830-1010	130	830	1010
SN35-210-190-450	210	190	450
SN35-210-270-530	210	270	530
SN35-210-350-610	210	350	610
SN35-210-430-690	210	430	690
SN35-210-510-770	210	510	770
SN35-210-590-850	210	590	850
SN35-210-670-930	210	670	930
SN35-210-750-1010	210	750	1010
SN35-210-910-1170	210	910	1170
SN35-210-1070-1330	210	1070	1330
SN35-210-1230-1490	210	1230	1490
SN35-290-270-610	290	270	610
SN35-290-350-690	290	350	690
SN35-290-430-770	290	430	770
SN35-290-510-850	290	510	850
SN35-290-590-930	290	590	930
SN35-290-670-1010	290	670	1010
SN35-290-830-1170	290	830	1170
SN35-290-990-1330	290	990	1330
SN35-290-1150-1490	290	1150	1490
SN35-290-1310-1650	290	1310	1650
SN35-370-350-770	370	350	770
SN35-370-430-850	370	430	850
SN35-370-510-930	370	510	930
SN35-370-590-1010	370	590	1010
SN35-370-750-1170	370	750	1170
SN35-370-910-1330	370	910	1330
SN35-370-1070-1490	370	1070	1490
SN35-370-1230-1650	370	1230	1650
SN35-450-430-930	450	430	930
SN35-450-510-1010	450	510	1010
SN35-450-670-1170	450	670	1170
SN35-450-830-1330	450	830	1330
SN35-450-990-1490	450	990	1490
SN35-450-1150-1650	450	1150	1650
SN35-450-1310-1810	450	1310	1810
SN35-530-590-1170	530	590	1170
SN35-530-750-1330	530	750	1330
SN35-530-910-1490	530	910	1490
SN35-530-1070-1650	530	1070	1650
SN35-530-1230-1810	530	1230	1810
SN35-610-670-1330	610	670	1330
SN35-610-830-1490	610	830	1490
SN35-610-990-1650	610	990	1650
SN35-610-1150-1810	610	1150	1810

Tab. 26

Size 43

Ordering description	Slider	Stroke	Rail
SN43-130-110-290	130	110	290
SN43-130-190-370	130	190	370
SN43-130-270-450	130	270	450
SN43-130-350-530	130	350	530
SN43-130-430-610	130	430	610
SN43-130-510-690	130	510	690
SN43-130-590-770	130	590	770
SN43-130-670-850	130	670	850
SN43-130-750-930	130	750	930
SN43-130-830-1010	130	830	1010
SN43-210-190-450	210	190	450
SN43-210-270-530	210	270	530
SN43-210-350-610	210	350	610
SN43-210-430-690	210	430	690
SN43-210-510-770	210	510	770
SN43-210-590-850	210	590	850
SN43-210-670-930	210	670	930
SN43-210-750-1010	210	750	1010
SN43-210-910-1170	210	910	1170
SN43-210-1070-1330	210	1070	1330
SN43-210-1230-1490	210	1230	1490
SN43-210-1390-1650	210	1390	1650
SN43-290-270-610	290	270	610
SN43-290-350-690	290	350	690
SN43-290-430-770	290	430	770
SN43-290-510-850	290	510	850
SN43-290-590-930	290	590	930
SN43-290-670-1010	290	670	1010
SN43-290-830-1170	290	830	1170
SN43-290-990-1330	290	990	1330
SN43-290-1150-1490	290	1150	1490
SN43-290-1310-1650	290	1310	1650
SN43-290-1470-1810	290	1470	1810
SN43-370-350-770	370	350	770
SN43-370-430-850	370	430	850
SN43-370-510-930	370	510	930
SN43-370-590-1010	370	590	1010
SN43-370-750-1170	370	750	1170
SN43-370-910-1330	370	910	1330
SN43-370-1070-1490	370	1070	1490
SN43-370-1230-1650	370	1230	1650
SN43-370-1390-1810	370	1390	1810
SN43-450-430-930	450	430	930
SN43-450-510-1010	450	510	1010
SN43-450-670-1170	450	670	1170
SN43-450-830-1330	450	830	1330
SN43-450-990-1490	450	990	1490
SN43-450-1150-1650	450	1150	1650
SN43-450-1310-1810	450	1310	1810
SN43-450-1470-1970	450	1470	1970
SN43-530-590-1170	530	590	1170
SN43-530-750-1330	530	750	1330
SN43-530-910-1490	530	910	1490
SN43-530-1070-1650	530	1070	1650
SN43-530-1230-1810	530	1230	1810
SN43-530-1390-1970	530	1390	1970
SN43-610-670-1330	610	670	1330
SN43-610-830-1490	610	830	1490
SN43-610-990-1650	610	990	1650
SN43-610-1150-1810	610	1150	1810
SN43-610-1310-1970	610	1310	1970

Tab. 27

Size 63

Ordering description	Slider	Stroke	Rail
SN63-130-400-610	130	400	610
SN63-130-480-690	130	480	690
SN63-130-560-770	130	560	770
SN63-130-640-850	130	640	850
SN63-130-720-930	130	720	930
SN63-130-800-1010	130	800	1010
SN63-210-320-610	210	320	610
SN63-210-400-690	210	400	690
SN63-210-480-770	210	480	770
SN63-210-560-850	210	560	850
SN63-210-640-930	210	640	930
SN63-210-720-1010	210	720	1010
SN63-210-880-1170	210	880	1170
SN63-210-1040-1330	210	1040	1330
SN63-210-1200-1490	210	1200	1490
SN63-210-1360-1650	210	1360	1650
SN63-290-240-610	290	240	610
SN63-290-320-690	290	320	690
SN63-290-400-770	290	400	770
SN63-290-480-850	290	480	850
SN63-290-560-930	290	560	930
SN63-290-640-1010	290	640	1010
SN63-290-800-1170	290	800	1170
SN63-290-960-1330	290	960	1330
SN63-290-1120-1490	290	1120	1490
SN63-290-1280-1650	290	1280	1650
SN63-370-320-770	370	320	770
SN63-370-400-850	370	400	850
SN63-370-480-930	370	480	930
SN63-370-560-1010	370	560	1010
SN63-370-720-1170	370	720	1170
SN63-370-880-1330	370	880	1330
SN63-370-1040-1490	370	1040	1490
SN63-370-1200-1650	370	1200	1650
SN63-370-1360-1810	370	1360	1810
SN63-450-400-930	450	400	930
SN63-450-480-1010	450	480	1010
SN63-450-640-1170	450	640	1170
SN63-450-800-1330	450	800	1330
SN63-450-960-1490	450	960	1490
SN63-450-1120-1650	450	1120	1650
SN63-450-1280-1810	450	1280	1810
SN63-530-560-1170	530	560	1170
SN63-530-720-1330	530	720	1330
SN63-530-880-1490	530	880	1490
SN63-530-1040-1650	530	1040	1650
SN63-530-1200-1810	530	1200	1810
SN63-530-1360-1970	530	1360	1970
SN63-610-640-1330	610	640	1330
SN63-610-800-1490	610	800	1490
SN63-610-960-1650	610	960	1650
SN63-610-1120-1810	610	1120	1810
SN63-610-1280-1970	610	1280	1970

Tab. 28

The most commonly used standard configurations are shown in the tables. Other deviating configurations and customer-specific adaptations are possible. For more information, please contact Rollon Technical Support.

Ordering key

SN Version 1 with a slider

SN	35	290	430	770	K1	NIC
						Expanded surface protection *see pg. ES-16, Anticorrosive protection*
					Clearance and preload, if deviating from standard *see pg. ES-15, tab. 14*	
				Rail length *see pg. ES-5, tab. 2, 4, 6, 8, 10*		
			Stroke *see pg. ES-5, fig. 7, tab. 1 to 10*			
		Slider length *see pg. ES-5, tab. 1, 3, 5, 7, 9*				
	Size *see pg. ES-5, Performance characteristics*					
Product type						

Ordering example 1: SN35-0290-0430-0770

Ordering example 2: SN35-0290-0430-0770-K1-NIC

Notes on ordering: Rail and slider lengths, as well as strokes, are always stated with 4 digits. Please use zeroes to fill in for lengths with less than 4 digits

SN version 2 with multiple independent sliders

SN	43	2	290	350	1330	G1	NIC
							Expanded surface protection *see pg. ES-16, Anticorrosive protection*
						Clearance and preload, if deviating from standard *see pg. ES-15, tab. 18*	
					Rail length *see pg. ES-5, tab. 2, 4, 6, 8, 10*		
				Stroke of the individual sliders *see pg. ES-5, fig. 7, tab. 1 to 10*			
			Slider length *see pg. ES-5, tab. 1, 3, 5, 7, 9*				
		Number of sliders					
	Size *see pg. ES-5, Performance characteristics*						
Product type							

Ordering example 1: SN43-2x0290-0350-1330

Ordering example 2: SN43-2x0290-0350-1330-G1-NIC

If the individual slider lengths and/or strokes are different, please order according to ordering example 3.

Ordering example 3: SN28-1x0200-0300/1x0250-0415-1240

Notes on ordering: Rail and slider lengths, as well as strokes, are always stated with 4 digits. Please use zeroes to fill in for lengths with less than 4 digits

SN Version 3 with multiple synchronized sliders

SN	63	850	(370+290)	400	1330	K1	NIC
							Expanded surface protection *see pg. ES-16, Anticorrosive protection*
						Clearance and preload, if deviating from standard *see pg. ES-15, tab. 18*	
					Rail length *see pg. ES-5, tab. 2, 4, 6, 8, 10*		
				Stroke *see pg. ES-5, fig. 7, tab. 1 to 10*			
			Individual length of slider *see pg. ES-5, tab. 1, 3, 5, 7, 9*				
		Apparent length, S´ of the slider *see pg. ES-8, fig. 9*					
	Size *see pg. ES-5 Performance characteristics*						
Product type							

Ordering example 1: SN63-0850(370+290)-0400-1330

Ordering example 2: SN63-0850(370+290)-0400-1330-K1-NI C

Notes on ordering: Rail and slider lengths, as well as strokes, are always stated with 4 digits. Please use zeroes to fill in for lengths with less than 4 digits

Serie SNK

SNK	43	1	110	2320	TSC	NIC
						For surface protection different from standard ISO 2081 *see pg. ES-16*
					Tipo di guida *see pg. ES-10 e ES-11*	
				Rail length *see pg. ES-10 tab 13*		
			Slider length *see pg. ES-10.*			
		Number of sliders for each rail				
	Size *see pg. ES-5 Performance characteristics*					
Product type						

Ordering example: SNK43-1x110-02320-TSC-NIC

Rail kit: 1x2000+1x320 (only for joined rails)

Drilling pattern: 40-40x80-40//40-15x80-40 (always state the drilling pattern separately)

Note for ordering: Rail lengths are always shown with five figures, and slider lengths are indicated with three figures preceded by zeros

Notes

ROLLON®
BY TIMKEN

Curviline



Product explanation

Curviline are curvilinear rails for constant and variable radii



Fig. 1

Curviline is the name of the curvilinear rail product family that is used for all non-linear special movements. Rails with constant or variable radii may be specified according to customer requirements, resulting in a highly flexible, economical solution. Curviline is available in two rail widths.
The use of standard radii is recommended. All non-standard rail layouts and radii are possible as custom products, however extra lead time may result.

The most important characteristics:

- Straight and curved sections in one continuos rail is possible
- Sliders with four rollers arranged in pairs maintain the preload over the entire rail length
- Custom production according to customer requirements
- Also available in stainless steel

Preferred areas of application of the Curviline product family:

- Packaging machines
- Railway car interior doors
- Special extensions
- Shipbuilding (interior doors)
- Food industry

Constant radii

The layout of CKR guide rails corresponds to a partial section of a complete circle.

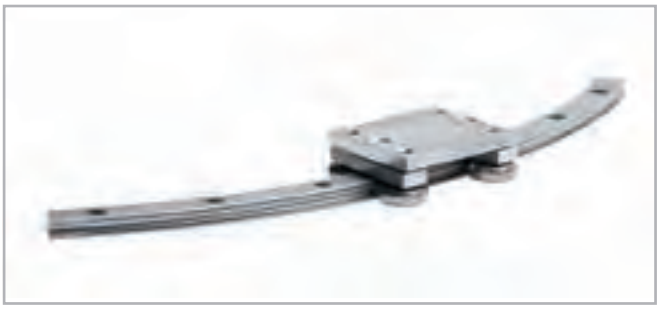

Fig. 2

Variable radii

CVR curvilinear rail is a combination of variable radii and straight sections.



Fig. 3

Straight rail

The linear rail Curviline is also available in its straight version.

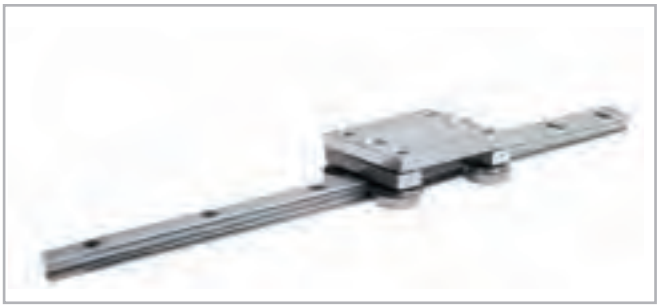

Fig. 4

Slider

The carriage maintains the desired preload over the entire rail layout. Pivoting roller mounts coupled with concentric and eccentric rollers allows for a smooth operation over complex rail layouts.



Fig. 5

Technical data

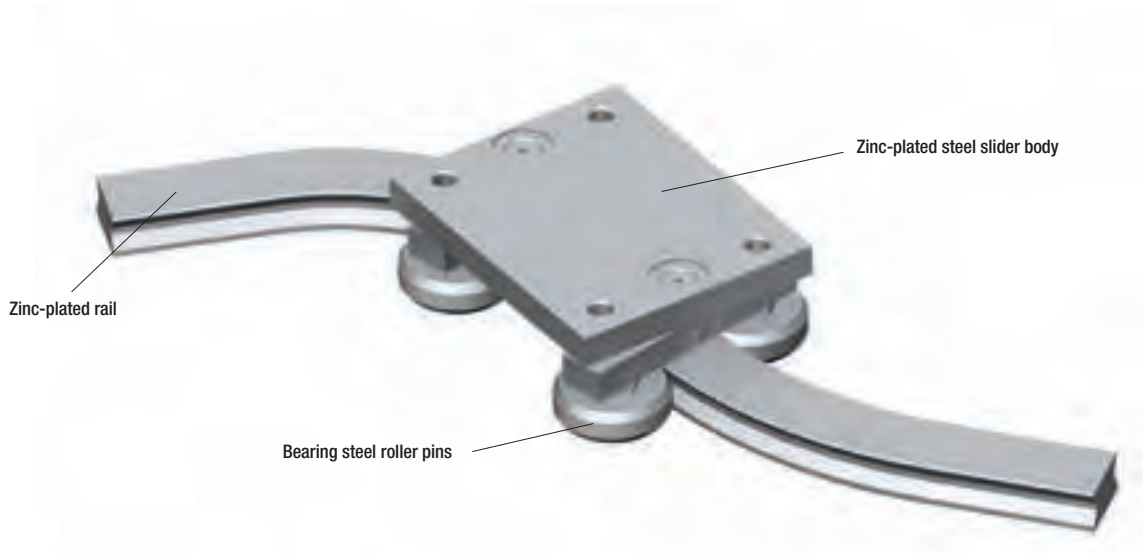

Fig. 6

Performance characteristics:

- Available rail widths: CKR01/CVR01: 16.5 mm (0.65 in) and CKR05/CVR05: 23 mm (0.91 in)
- Max. slider operating speed on the rail: 1.5 m/s (59 in/s) (depending on application)
- Max. acceleration: 2 m/s² (78 in/s²) (depending on application)
- Max. effective length of the rail: 3,240 mm (127.56 in)
- Max. traverse: CCT08: 3,170 mm (124.8 in) and CCT11: 3,140 mm (123.62 in)
- Minimum radius for stainless steel version and non-hardened version 120 mm
- Minimum radius for version with hardened raceways: 300 mm for section 01, 400 mm for size 05 For non-standard radii, please contact Rollon technical support.
- Radius tolerance +/- 0.5 mm (0.02 in), angle tolerance +/- 1°
- Temperature range: -20 °C to +80 °C (-4 °F to +176 °F)
- Rail and runner electrolytic zinc-plated and passivated (Rollon Aloy); increased anticorrosive protection on request (see pg. CL-12 Anticorrosive protection)
- Rail material: C43, AISI316L for the stainless steel version
- Slider body material: Fe360, AISI316L for the stainless steel version
- Radial ball bearing roller material: 100Cr6, AISI440 for the stainless steel version
- Rollers are lubricated for life

Remarks:

- With a simple adjustment of the eccentric roller (denoted with a marking on the bottom of the roller), the slider preload can be set to desired preload, including clearance.
- The recommended hole pitch is 80 mm (3.15 in) on the extended length
- Please indicate the precise rail layout and the desired hole pattern in a drawing
- Indicate if the design is a right or left version when ordering
- Joined rails are not recommended. For more information, please contact Rollon technical support.
- Resulting moment loads must be absorbed through the use of two sliders. For more information, please contact Rollon technical support.

Product dimensions

Rails with constant/variable radii with tempered raceways

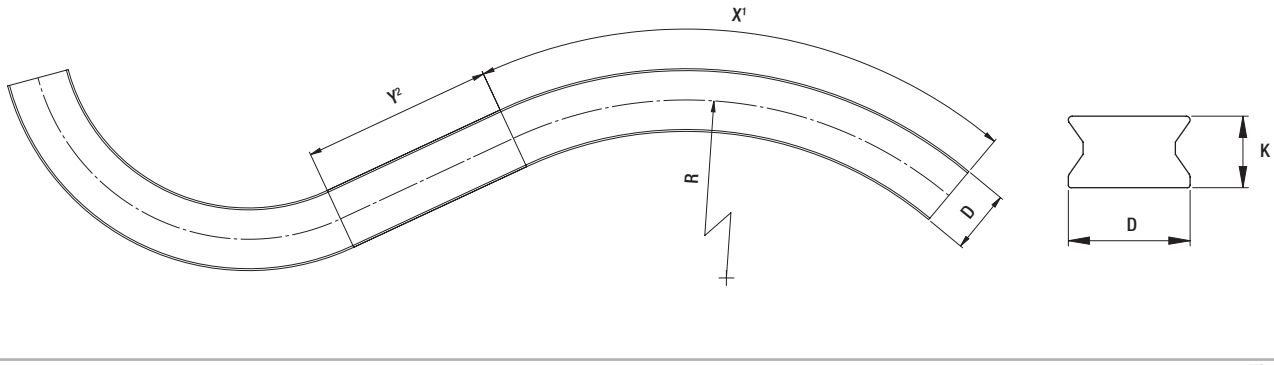

¹ The max. angle (X) is dependent on the radius
² For curvilinear rails with variable radii, Y must be at least 70 mm

Fig. 7

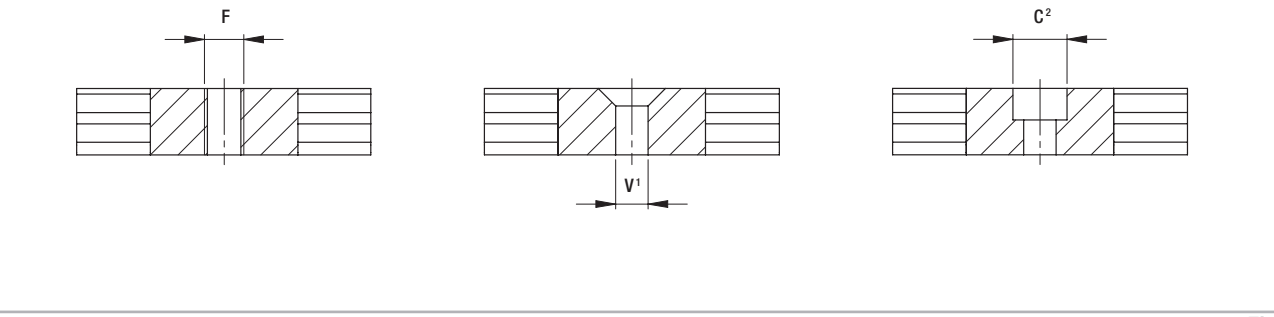

¹ Fixing holes (V) for countersunk head screws according to DIN 7991
² Fixing holes (C) for socket cap screws according to DIN 912

Fig. 8

Type	D [mm]	K [mm]	F	C²	V¹	X	Standard radii [mm]	Y [mm]	Weight [kg/m]
CKRH01 CVRH01	16,5	10	up to M6	up to M5	up to M5	dependent on radius	300* - 400 - 500 - 600 - 700 - 800 - 900 - 1000	min. 70	1,2
CKRH05 CVRH05	23	13,5	up to M8	up to M6	up to M6				2,2

* Only for size 01

Tab. 1

Please indicate the precise rail layout and the desired hole pattern in a drawing. We recommend 80 mm (3.15 in) on the extended length as a gage for the hole pattern.

Non-standard radii are possible as special products. For more information on rail layouts, radii and hole patterns, please contact Rollon Technical Support.

Slider

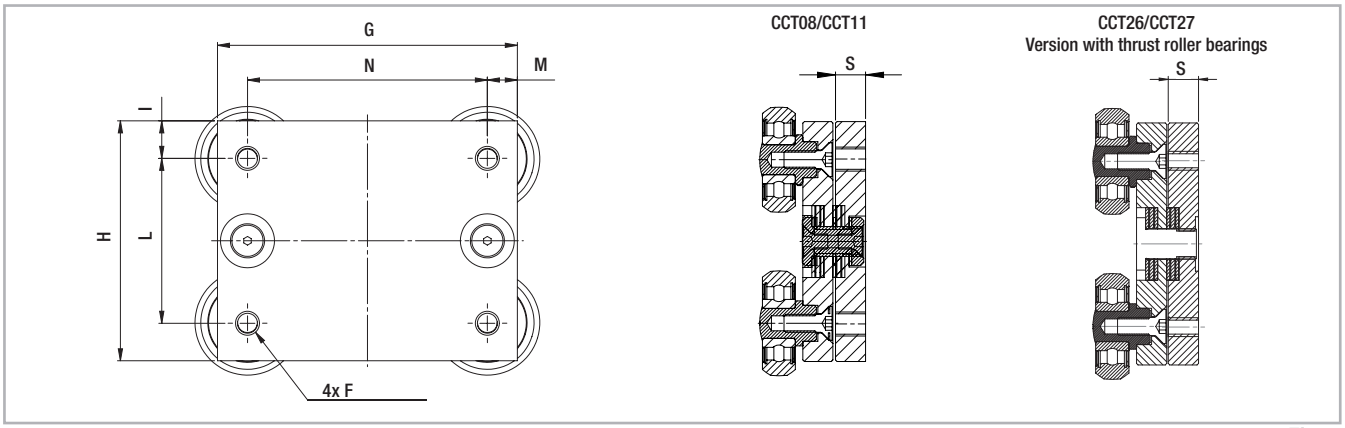

Fig. 9

Type	G [mm]	H [mm]	I [mm]	L [mm]	M [mm]	N [mm]	S [mm]	F	Weight [kg]
CCT08/CCT26	70	50	10	30	10	50	10	M5	0,45
CCT11/CCT27	100	80	12,5	55	10	80	10	M8	1,1

Tab. 2

Mounted sliders and rails

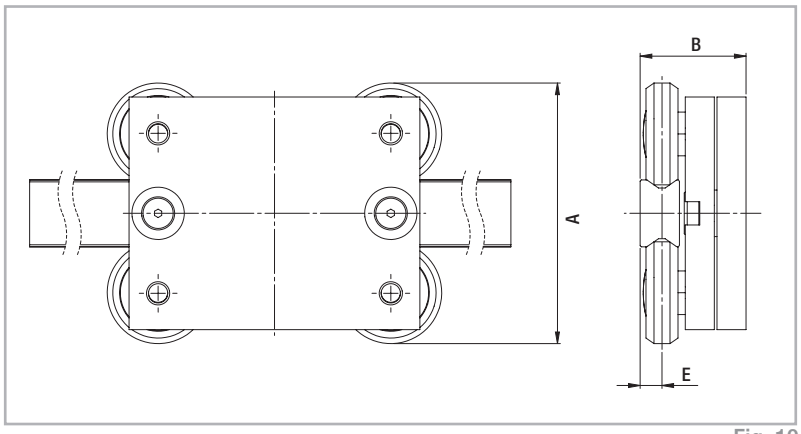

Fig. 10

Configuration	A [mm]	B [mm]	E [mm]
CKRH01-CCT08/CCT26 CVRH01-CCT08/CCT26	60	32,3	5,7
CKRH05-CCT11/CCT27 CVRH05-CCT11/CCT27	89,5	36,4	7,5

Tab. 3

Load capacities

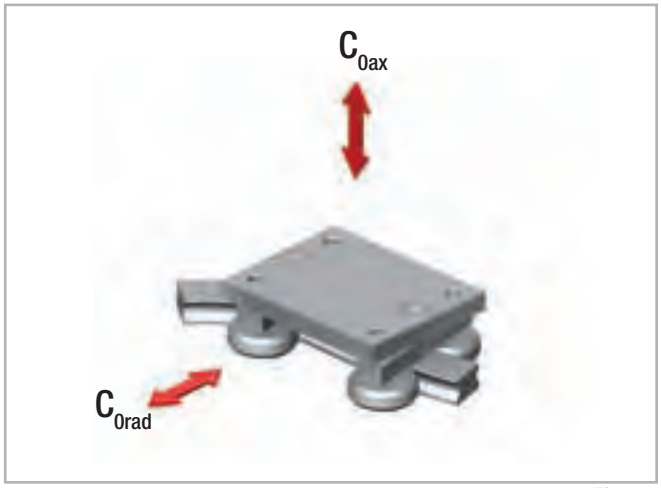

Fig. 11

Slider type	Load capacities	
	C_{0ax} [N]	C_{0rad} [N]
CKRH01-CCT08/CCT26 CVRH01-CCT08/CCT26	592	980
CKRH05-CCT11/CCT27 CVRH05-CCT11/CCT27	1459	2475

Resulting moment loads must be absorbed through the use of two sliders

Tab. 4

Rails with constant/variable radii in carbon steel

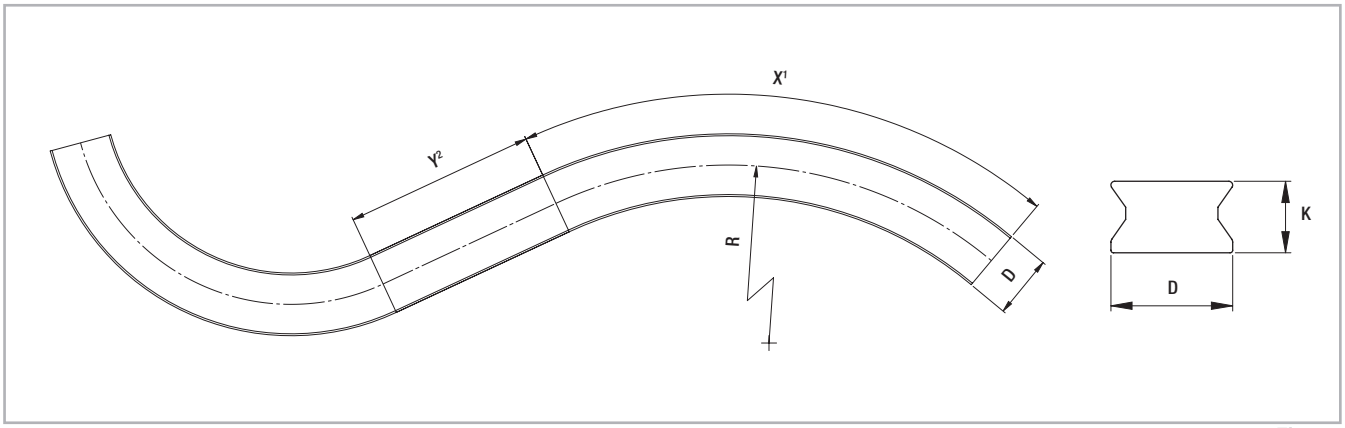

[1] The max. angle (X) is dependent on the radius
[2] For curvilinear rails with variable radii, Y must be at least 70 mm

Fig. 12

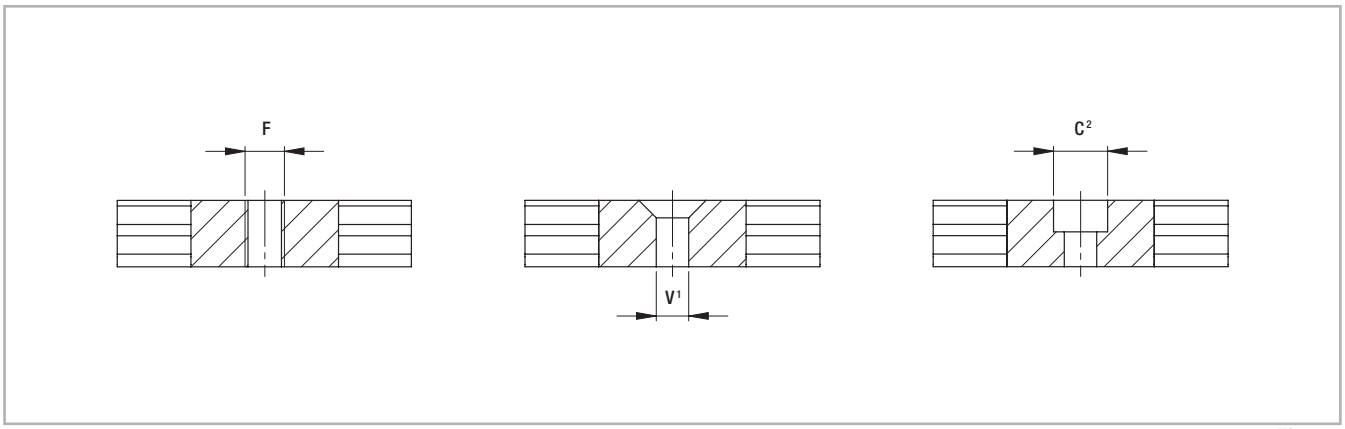

[1] Fixing holes (V) for countersunk head screws according to DIN 7991
[2] Fixing holes (C) for socket cap screws according to DIN 912

Fig. 13

Type	D [mm]	K [mm]	F	C²	V¹	X	Standard radii [mm]	Y [mm]	Weight [kg/m]
CKR01 CVR01	16,5	10	up to M6	up to M5	up to M5	dependent on radius	150 - 200 - 250 - 300 - 400 - 500 - 600 - 700 - 800 - 900 - 1000	min. 70	1,2
CKR05 CVR05	23	13,5	up to M8	up to M6	up to M6				2,2

Tab. 5

Please indicate the precise rail layout and the desired hole pattern in a drawing. We recommend 80 mm (3.15 in) on the extended length as a gage for the hole pattern.

Non-standard radii are possible as special products. For more information on rail layouts, radii and hole patterns, please contact Rollon Technical Support.

Slider

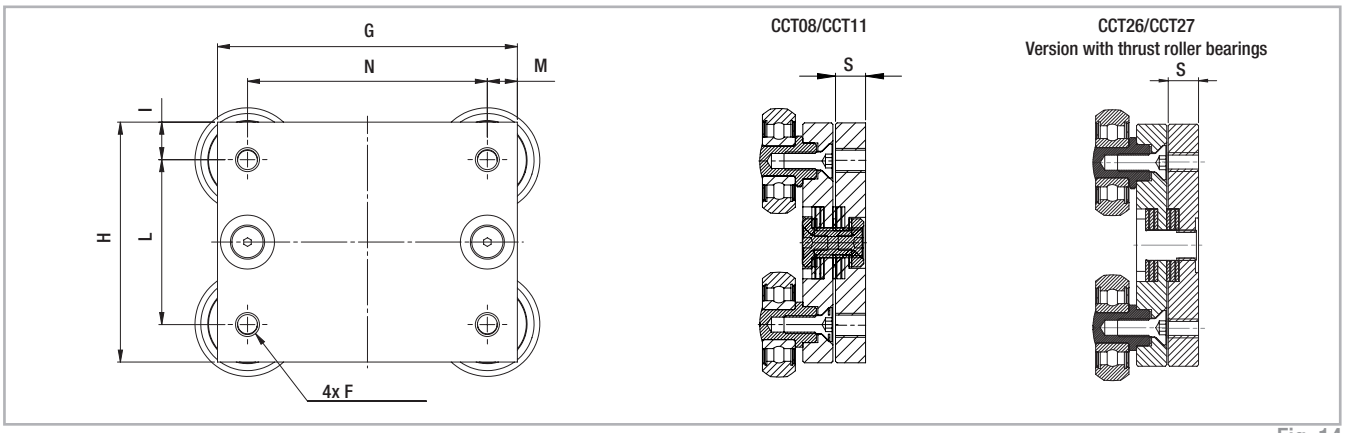

Fig. 14

Type	G [mm]	H [mm]	I [mm]	L [mm]	M [mm]	N [mm]	S [mm]	F	Weight [kg]
CCT08/CCT26	70	50	10	30	10	50	10	M5	0,45
CCT11/CCT27	100	80	12,5	55	10	80	10	M8	1,1

Tab. 6

Mounted sliders and rails

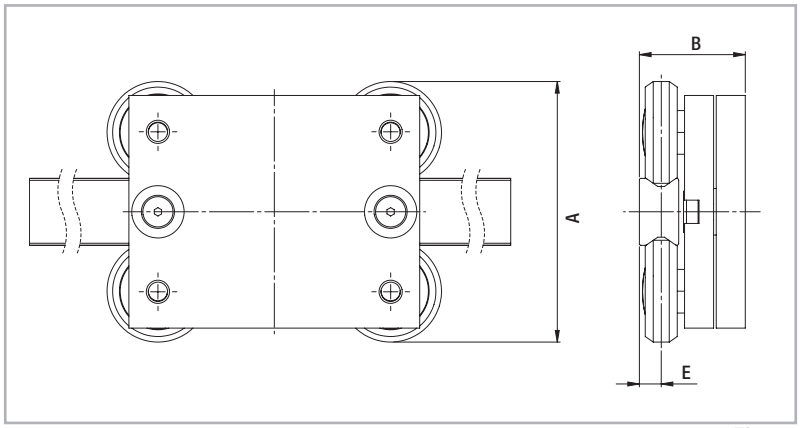

Fig. 15

Configuration	A [mm]	B [mm]	E [mm]
CKR01-CCT08/CCT26 CVR01-CCT08/CCT26	60	32,3	5,7
CKR05-CCT11/CCT27 CVR05-CCT11/CCT27	89,5	36,4	7,5

Tab. 7

Load capacities

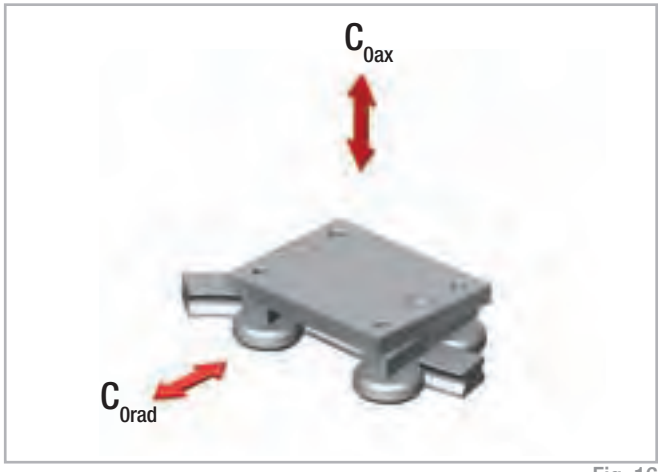

Fig. 16

Slider type	Load capacities	
	C_{0ax} [N]	C_{0rad} [N]
CKR01-CCT08/CCT26 CVR01-CCT08/CCT26	400	570
CKR05-CCT11/CCT27 CVR05-CCT11/CCT27	1130	1615

Tab. 8

Resulting moment loads must be absorbed through the use of two sliders

Rails with constant/variable radii in stainless steel

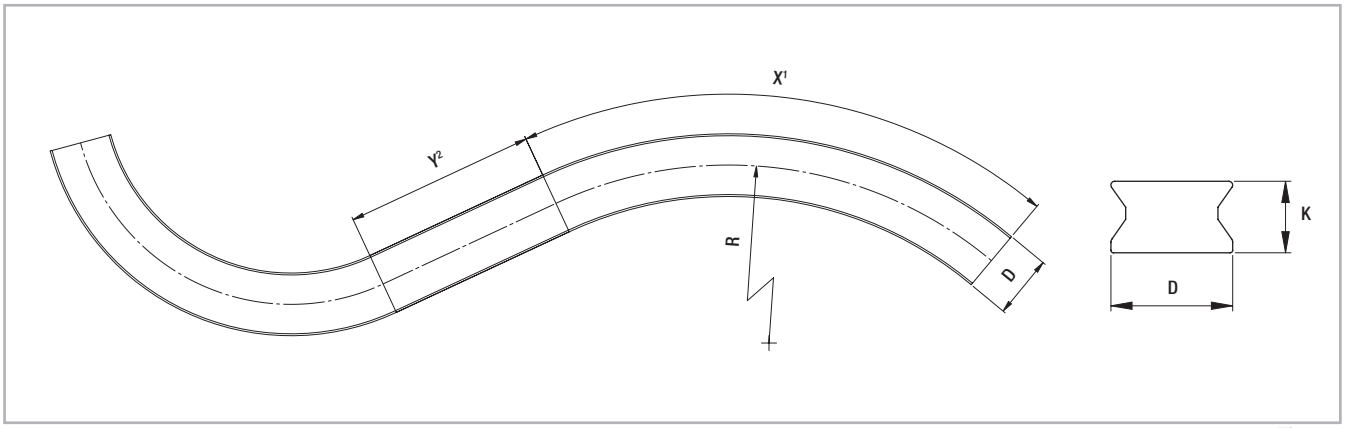

[1] The max. angle (X) is dependent on the radius
[2] For curvilinear rails with variable radii, Y must be at least 70 mm

Fig. 17

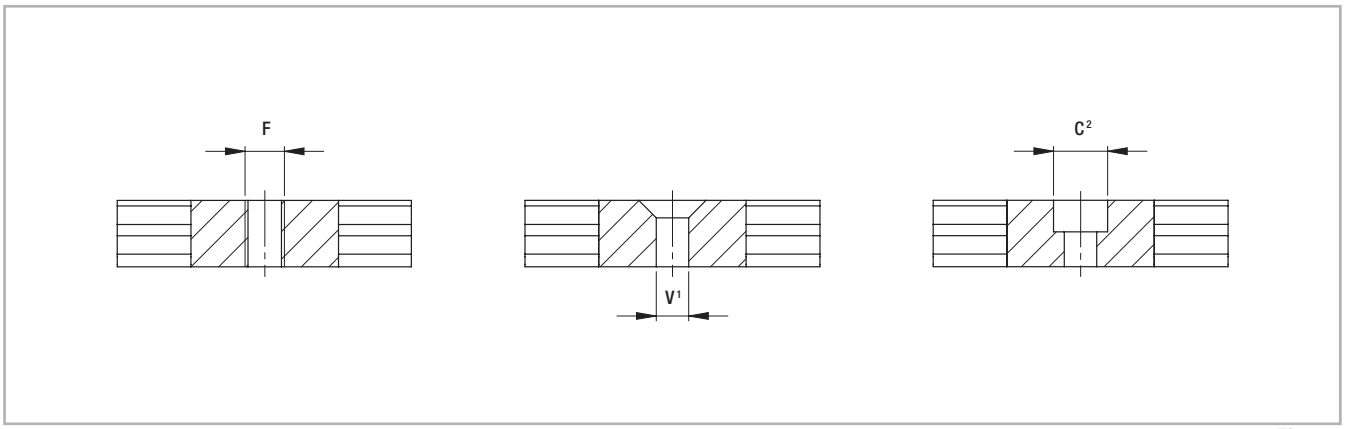

[1] Fixing holes (V) for countersunk head screws according to DIN 7991
[2] Fixing holes (C) for socket cap screws according to DIN 912

Fig. 18

Type	D [mm]	K [mm]	F	C²	V¹	X	Standard radii [mm]	Y [mm]	Weight [kg/m]
CKRX01 CVRX01	16,5	10	up to M6	up to M5	up to M5	dependent on radius	150 - 200 - 250 - 300 - 400 - 500 - 600 - 700 - 800 - 900 - 1000	min. 70	1,2
CKRX05 CVRX05	23	13,5	up to M8	up to M6	up to M6				2,2

Tab. 9

Please indicate the precise rail layout and the desired hole pattern in a drawing. We recommend 80 mm (3.15 in) on the extended length as a gage for the hole pattern.

Non-standard radii are possible as special products. For more information on rail layouts, radii and hole patterns, please contact Rollon Technical Support.

Slider in stainless steel

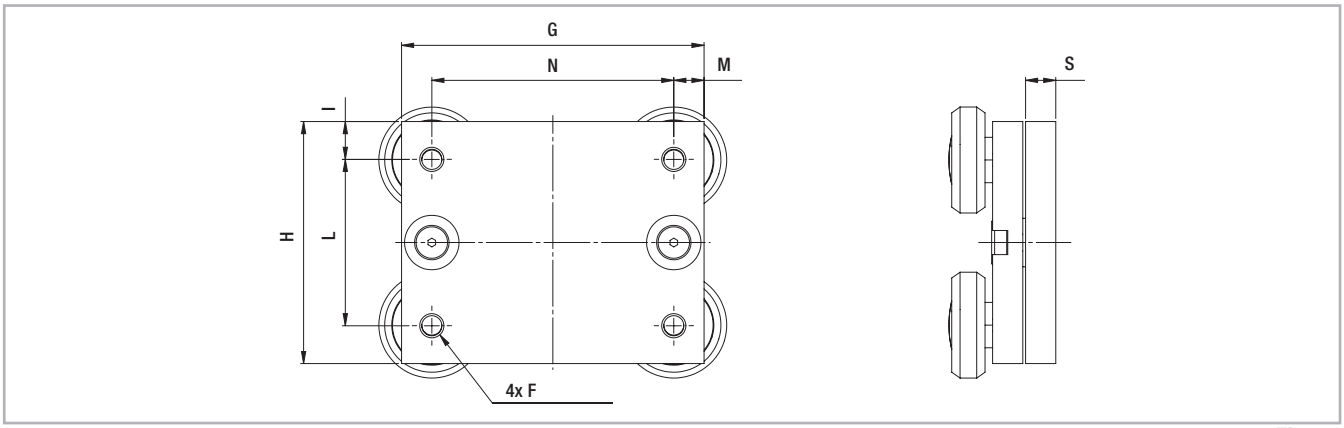

Fig. 19

Type	G [mm]	H [mm]	I [mm]	L [mm]	M [mm]	N [mm]	S [mm]	F	Weight [kg]
CCTX08	70	50	10	30	10	50	10	M5	0,45
CCTX11	100	80	12,5	55	10	80	10	M8	1,1

Tab. 10

Rail-slider package in stainless steel

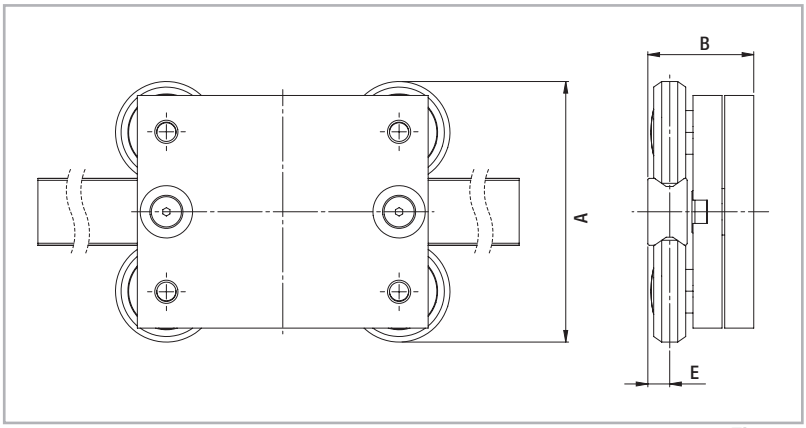

Fig. 20

Configuration	A [mm]	B [mm]	E [mm]
CKRX01-CCTX08 CVRX01-CCTX08	60	32,3	5,7
CKRX05-CCTX11 CVRX05-CCTX11	89,5	36,4	7,5

Tab. 11

Load capacities

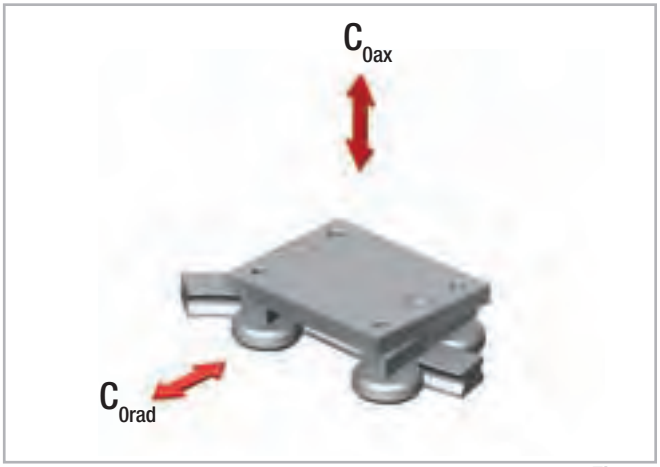

Fig. 21

Slider type	Load capacities	
	C_{0ax} [N]	C_{0rad} [N]
CKRX01-CCTX08 CVRX01-CCTX08	400	570
CKRX05-CCTX11 CVRX05-CCTX11	1130	1615

Tab. 12

Resulting moment loads must be absorbed through the use of two sliders

Technical instructions

Anticorrosive protection

The Curviline product family comes standard with electrolytic zinc plating with passivation (RolonAloy) for anitcorrosion protection. If increased anticorrosive protection is required, application-specific surface treatments are available on request, e.g. as nickel-plated design with FDA approval for use in the food industry. The Curviline series is also available in stainless steel. For more information, please contact Rollon technical support.

Lubrication

Roller lubrication

All rollers of the Curviline product family are lubricated for life.

Lubrication of the raceways

Rails must be lubricated before operation. Recommended lubrication intervals are heavily dependent upon the ambient conditions, speed and temperature. Under normal conditions, lubrication is recommended after 100 km operational performance or after an operating period of six months. In critical application cases the interval should be shorter. Please clean the raceways carefully before lubrication.
We recommend a roller bearing lubricant with a lithium base of average consistency.

Proper lubrication during normal conditions:

- reduces friction
- reduces wear
- reduces the load of the contact surfaces through elastic deformations
- reduces running noise

Different lubricants are available by request for special applications:

- FDA-approved lubricant for use in the food industry
- specific lubricant for clean rooms
- specific lubricant for the marine technology sector
- specific lubricant for high and low temperatures

For specific information, contact Rollon technical support.

Setting the preload

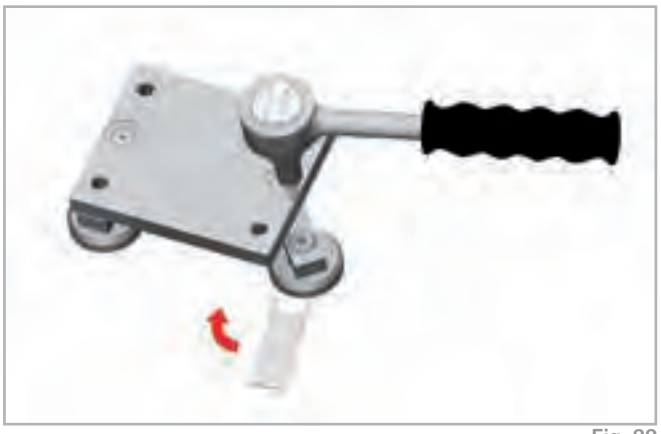

Fig. 22

Type	Tightening torque [Nm]
CCT08	7
CCT11	12

Tab. 13

If the curvilinear rails are delivered as a system, the sliders are already set with no clearance. In this case the fixing screws are secured with Loctite® at the factory.

If delivered separately, or if the sliders should be installed in another track, the eccentric roller pins must be readjusted. Important: The fixing screws must be additionally glued against loosening. The following points must also be observed:

- Wipe the raceways of any dirt and debris.
- Slightly loosen the fixing screws of the roller mounting.
  The eccentric roller pins are marked on the bottom.
- Position the slider(s) at the ends of the rail.
- The special flat key provided is inserted from the side onto the hexagonal of the roller to be set (see fig. 22).
- By turning the flat key clockwise the roller is pressed against the raceway and thus reduces the clearance. Observe that with increasing preload, the friction is also increased and thus the service life reduced.
- Hold the roller pin with the adjustment key in the desired position and carefully tighten the fixing screw. The exact tightening torque will be checked later.
- Move the slider on the rail and check the preload over the entire length of the rail. It should move easily and the slider should not have play at any location of the rail.
- Now tighten the fixing screws with the specified tightening torque (see tab. 13), while the flat key holds the angle adjustment of the pin. A special thread in the roller pin secures the set position.

Ordering key

Constant radius rail / slider system

CKR01	85°	600	890	/2/	CCT08	NIC	R	
							Right or left version	
						Expanded surface protection if deviation from Standard *see pg. CL-12 Anticorrosion protection*		
					Slider type	*see pg. CL-7, tab. 3 ; CL-9, tab.7 ; CL-11, tab.11*		
				Number of sliders				
			Rails extended length					
		Radius	*see pg. CL-6, tab. 1 ; CL-8, tab. 5 ; CL-10, tab. 9*					
	Angle							
Rail type	*see pg. CL-6, tab. 1 ; CL-8, tab. 5 ; CL-10, tab. 9*							

Ordering example: CKR01-085°-0600-0890/2/CCT08-NIC-R

Note: Information for right and left side installation and for expanded surface protection is only necessary if required

Notes on ordering: Rail lengths and radii always are indicated with four digits, angles always with three digits and a zero as prefix

Exact specifications (angle, radius, hole pattern, etc.) must be represented in a drawing

Variable radius rail / slider system

CVR01	39°	200	//23°	400	297	/2/	CCT08	NIC	R
									Right or left version
								Expanded surface protection if deviation from Standard *see pg. CL-8 Anticorrosion protection*	
							Slider type ;	*see pg. CL-7, tab. 3 ; CL-9, tab.7 CL-11, tab.11*	
						Number of sliders			
					Rails extended length				
				Radius	*see pg. CL-6, tab. 1 ; CL-8, tab. 5 ; CL-10, tab. 9*				
			Angle						
		Radius	*see pg. CL-6, tab. 1 ; CL-8, tab. 5 ; CL-10, tab. 9*						
	Angle								
Rail type	*see pg. CL-6, tab. 1 ; CL-8, tab. 5 ; CL-10, tab. 9*								

Ordering example: CVR01-039°-0200//023°-0400-0297/2/CCT08-NIC-R

Note: Data for angles and respective radii are in sequential order

Note: Information for right and left side installation and for expanded surface protection is only necessary if required

Notes on ordering: Rail lengths and radii always are indicated with four digits, angles always with three digits and a zero as prefix

Exact specifications (layout, angle, radius, hole pattern, etc.) must be represented in a drawing

Constant radius rails

CKR01	120°	600	1152	NIC	R
					Right or left version
				Expanded surface protection if deviation from Standard	
				see pg. CL-12 Anticorrosion protection	
			Rails extended length		
		Radius	*see pg. CL-6, tab. 1 ; CL-8, tab. 5 ; CL-10, tab. 9*		
	Angle				
Rail type	*see pg. CL-6, tab. 1 ; CL-8, tab. 5 ; CL-10, tab. 9*				

Ordering example: CKR01-120°-0600-1152-NIC-R

Note: Information for right and left side installation and for expanded surface protection is only necessary if required

Notes on ordering: Rail lengths and radii always are indicated with four digits, angles always with three digits and a zero as prefix

Exact specifications (angle, radius, hole pattern, etc.) must be represented in a drawing

Variable radius rails

CVR01	39°	200	//23°	400	297	NIC	R
							Right or left version
						Expanded surface protection if deviation from Standard	
						see pg. CL-12 Anticorrosion protection	
					Rails extended length		
				Radius	*see pg. CL-6, tab. 1 ; CL-8, tab. 5 ; CL-10, tab. 9*		
			Angle				
		Radius	see *pg. CL-6, tab. 1 ; CL-8, tab. 5 ; CL-10, tab. 9*				
	Angle						
Rail type	see *pg. CL-6, tab. 1 ; CL-8, tab. 5 ; CL-10, tab. 9*						

Ordering example: CVR01-039°-0200//023°-0400-0297-NIC-R

Note: Data for various angles and respective radii are in sequential order

Note: Information for right and left side installation and for expanded surface protection is only necessary if required

Notes on ordering: Rail lengths and radii always are indicated with four digits, angles always with three digits and a zero as prefix

Exact specifications (layout, angle, radius, hole pattern, etc.) must be represented in a drawing

Slider

CCT08	NIC	
	Expanded surface protection if deviation from Standard	*see pg. CL-12 Anticorrosion protection*
Slider type	*see pg. CL-7, tab. 3 ; CL-9, tab.7 ; CL-11, tab.11*	

Ordering example: CCT08-NIC

Note: Information for expanded surface protection are only necessary when needed

ROLLON®
BY TIMKEN

O-Rail



Product explanation

O-Rail - unique assembly possibilities



Fig. 1

The roller linear system O-Rail offers the maximum flexibility configuration due to the original shape of the guide with 3 raceways arranged at 90 ° to each other where on each of those can slide rollers R..43G series. Using a single guide, two, or more parallel guides, gives rise to a number of combinations capable of satisfying each specific need for linear motion and offering exceptional self-alignment capacity. O-Rail is constructed in high strength steel hardened with hardening treatments, for a further improvement of both performance and durability.

O-Rail is designed to be a strong and simple multitask linear system for larger handling and automation applications. It is an easy to assemble system, that offers smooth motion even on inaccurate surfaces.

FXRG series

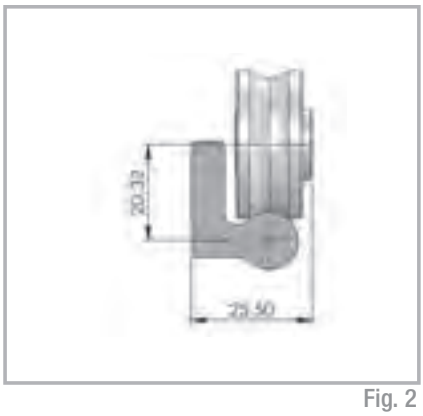

Fig. 2

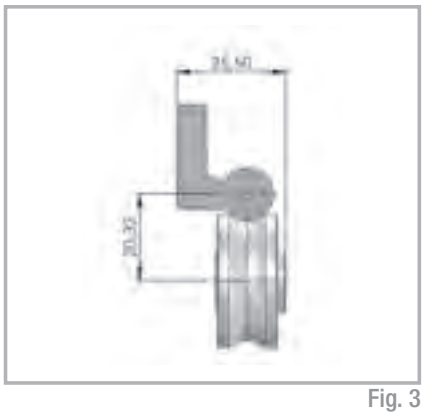

Fig. 3

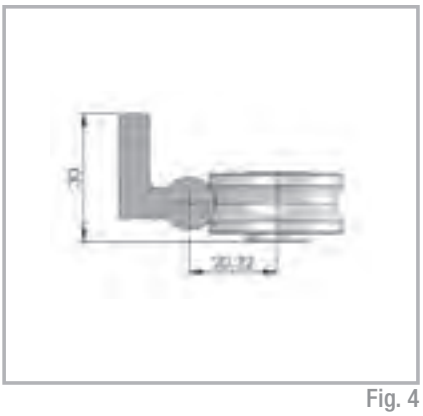

Fig. 4

General characteristics

New geometrical design of the contact areas, based on Gothic arch raceways

- Superior sliding
- Very low friction
- Long lifetime
- Greater load capacity
- Very compact design

New rollers, double row bearings, with increased thickness of outer ring, gothic profile and finished raceways.

- Increased load capacity
- Increased lifetime
- Extremely low noise
- High speed
- Neoprene lateral seals for dust protection

Self-aligning system when using two parallel rails, compensating large assembly inaccuracies on both longitudinal and transversal plane.

- allow for installation on non precise structures - welded carpentery or aluminium frame structures
- Do not require machined fixing surfaces for installation.
  Cost saving, as easy and fast assembly

Patented process Rollon-Nox, to further improve the rail material and thermochemical hardening treatment of deep nitriding and post-oxidation black for an effective corrosion protection.

- Very high hardness
- Resistance to heavy loads
- Very low wear
- Effective corrosion protection
- Smooth black finish

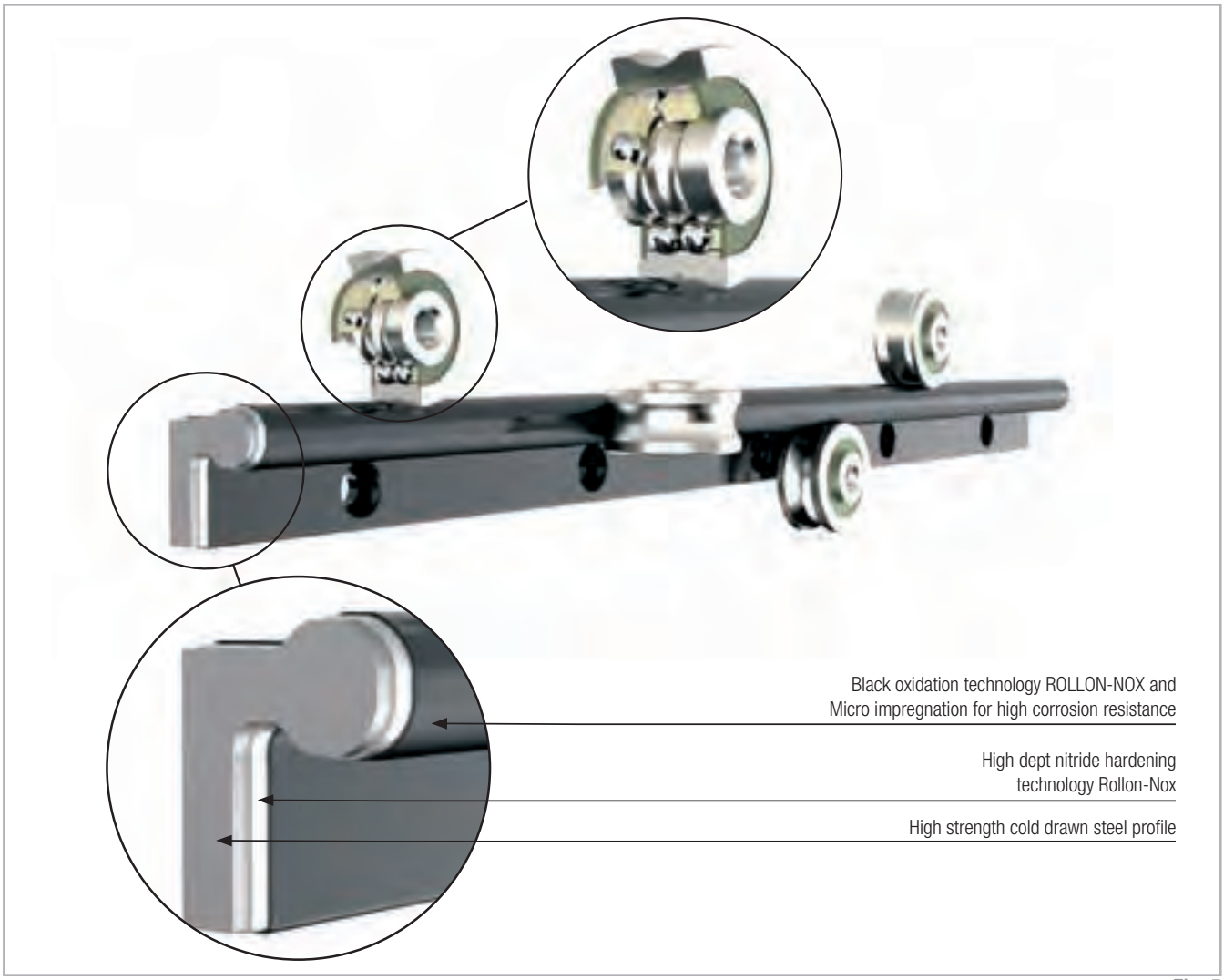

Fig. 5

Configurations

The FXRG allows a wide range of configurations when using two or more rails in parallel. Depending on required load and moment capacities/ direction more single rollers and standard sliders are used to obtain unique Self-aligning systems. Contact ROLLON for eventual support in dimensioning customized systems .

FXRG with guiding slider with limited rotational capacity

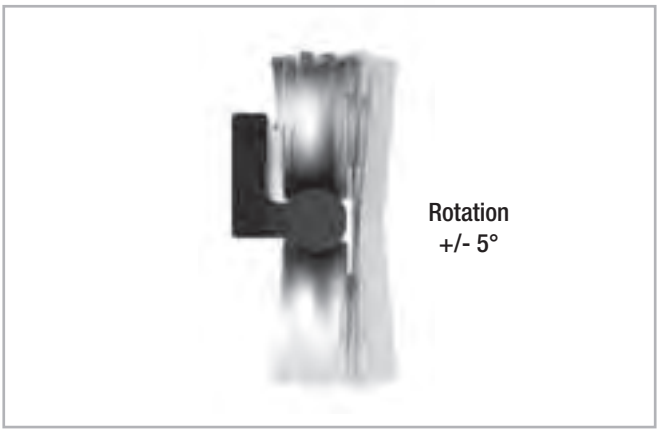

Fig. 6

Combination of two FXRG with resting load

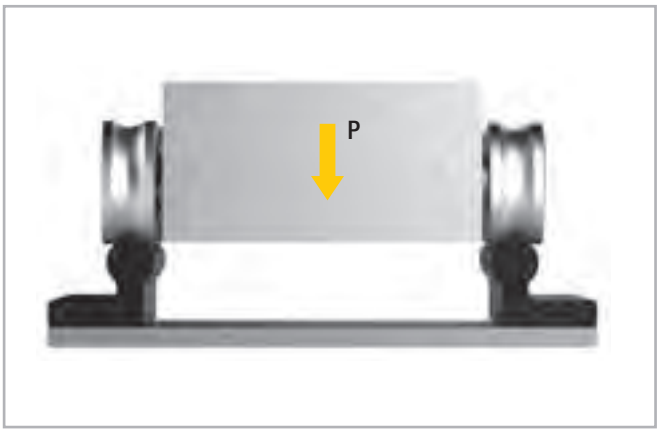

Fig. 7

Configuration with two parallel FXRG with self-aligning capacity

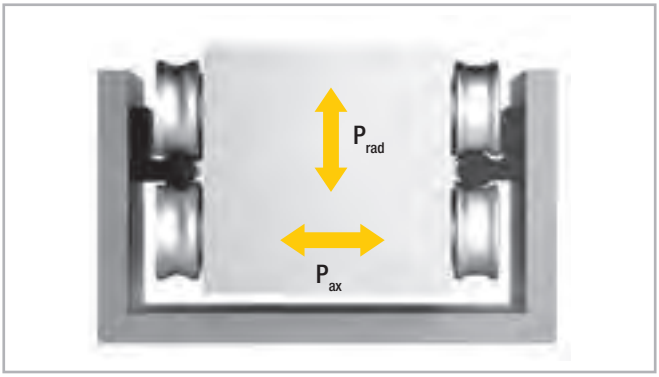

Fig. 8

Configuration with two FXRG to form a single rail with a slider allowing for high Mx moments

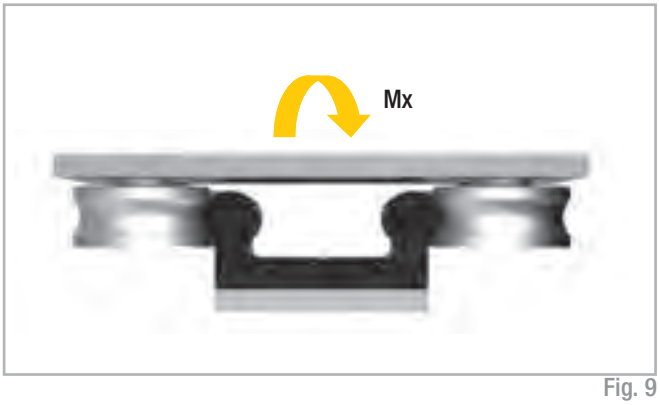

Fig. 9

Telescopic configuration

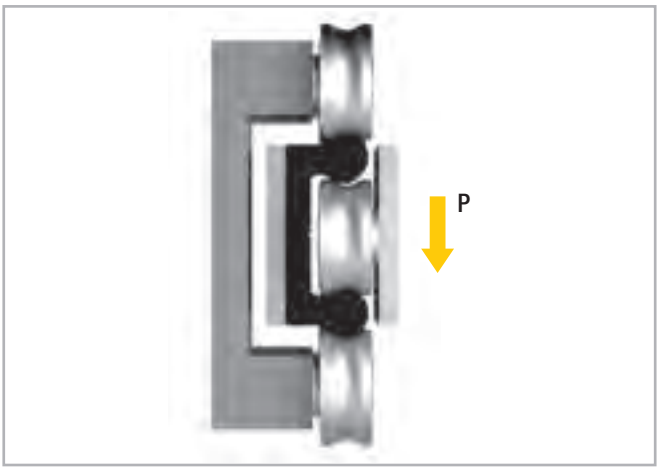

Composed of two FXRG rails with rollers in between the rails fixed to mobile part and rollers on fixed structure running on outer raceways, providing a customized solutions for telescopic movements.

Fig. 10

Configuration of two FXRG

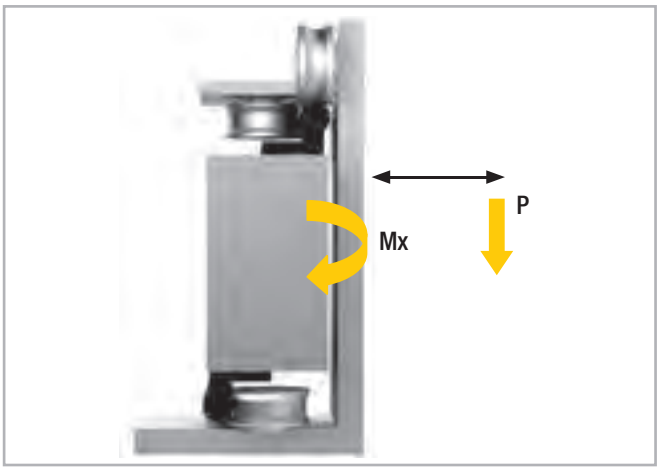

With high cantilever load capacity, meanwhile Self-aligning.

Fig. 11

Dimensions and load capacity

FXRG series

FXRG is a high precision cold drawn profile of high strength steel. After a high depth nitride hardening treatment the rails are oxidized, assuring high hardness and excellent corrosion resistance. The characteristic black color on the whole rail is the result of oxidation and subsequent process of micro-impregnation with oils and substances for improved smoothness and long life. The fixing holes are for standard M6 cylindrical low head screws, DIN 7984, with 80mm pitch .

Position of guiding roller - Concentric RCV43G on the three raceways

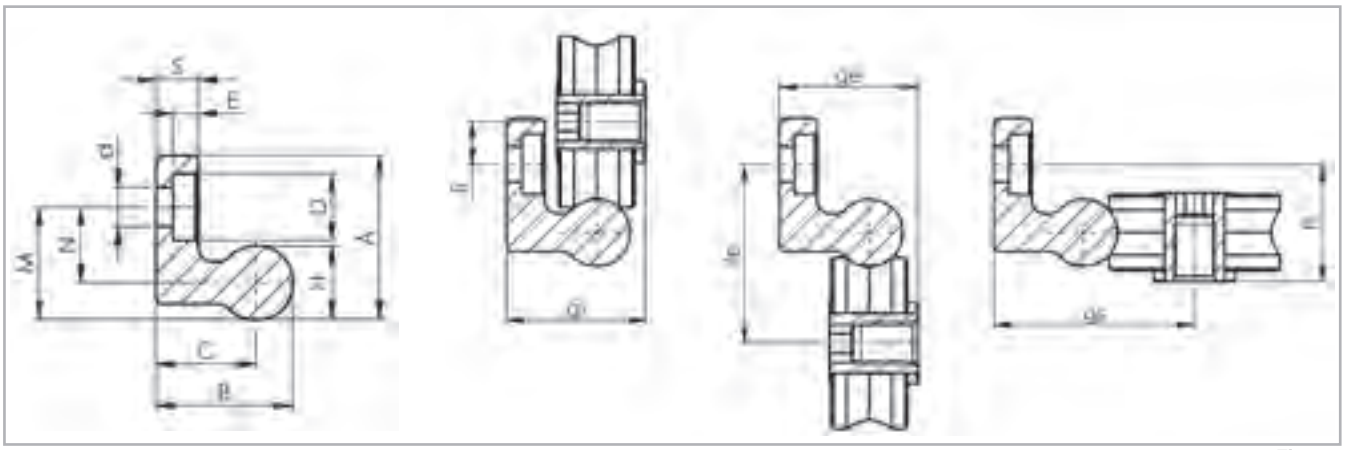

Fig. 12

Type	A [mm]	B [mm]	S [mm]	H [mm]	C [mm]	d [mm]	D [mm]	E [mm]	Screw type	M [mm]	N [mm]	Weight [g]
FXRG	27,02	22,52	7,00	12,04	16,50	6,50	11,00	4,20	M6 DIN 7984	18,52	12,50	2,48

Tab. 1

Axial movement of floating roller R.P43G with FXRG

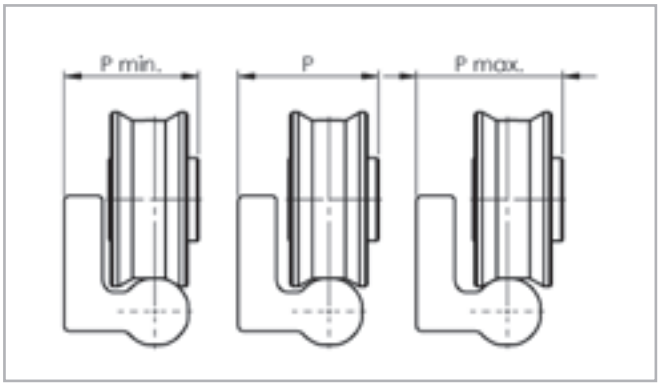

Fig. 13

Rotation of guiding roller R.V43G on FXRG

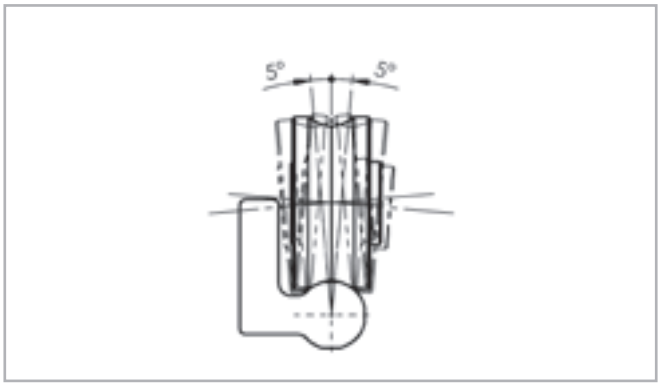

Fig. 14

Type	P [mm]	movement	P_{min} [mm]	P_{max} [mm]
FXRG	25,50	+/-1	24,50	26,50

Tab. 2

fi [mm]	gi [mm]	fe [mm]	ge [mm]	fs [mm]	gs [mm]
7,82	25,50	32,82	25,50	21,50	36,82

Tab. 3

Available lengths and types

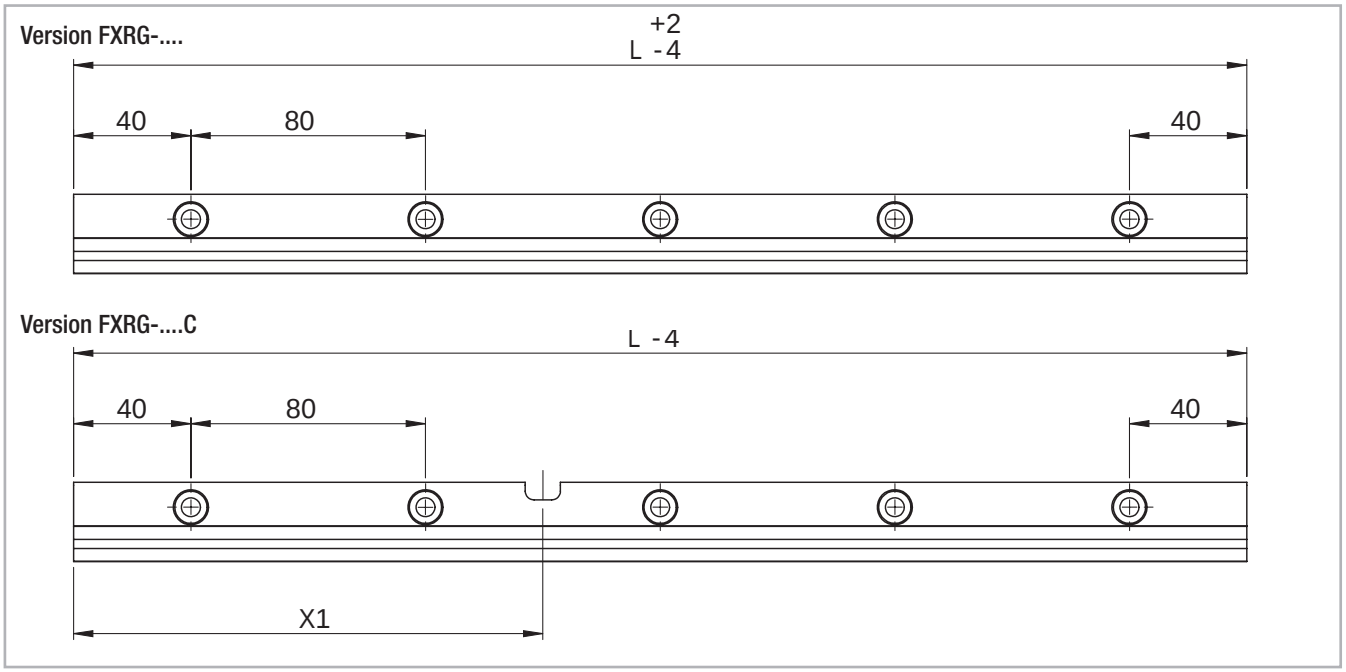

Version FXRG-.... and Version FXRG-....C with additional slot - see page OR-9

Fig. 15

Dimensions

Rail codes	Length L [mm]
FXRG	400 - 480 - 560 - 640 - 720 - 800 - 880 - 960 - 1040 - 1120 - 1200 - 1280 - 1360 - 1440 - 1520 - 1600 - 1680 - 1760 - 1840 - 1920 - **2000** - 2080 - 2160 - 2240 - 2320 - 2400 - 2480 - 2560 - 2640 - 2720 - 2800 - 2880 - 2960 - 3040 - 3120 - 3200 - 3280 - 3360 - 3440 - 3520 - 3600 - 3680 - 3760 - 3840 - 3920 - **4000**

Special lengths or pitches available upon request, please contact our Technical Department
Highlighted rail lenghts are available from stock

Tab. 4

Version	Characteristics
BASIC	Cold drawn profile with high depth nitrade hardening “Rollon-Nox”, oxidation with micro oil impregnation. Ends are cut to size after treatments and sprayed with protective black paint.

Tab. 5

Accessories

Rollers for FXRG

Guiding roller R.VG and floating roller R.PG

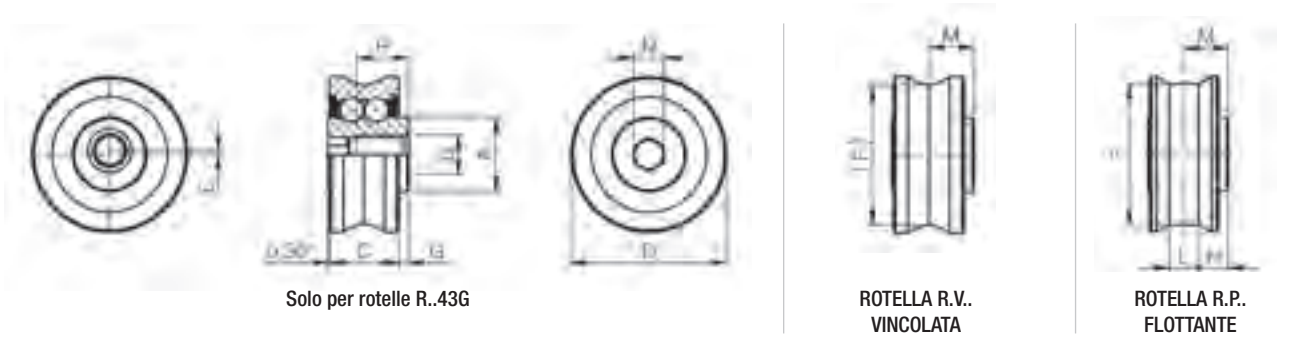

Fig. 16

Roller code	Type	Versions	E [mm]	D [mm]	C [mm]	M [mm]	G [mm]	N chiave	A [mm]	B [mm]	P [mm]	F [mm]	L [mm]	H [mm]	Weight [g]	Dynamic coefficient C [N]	Load capacity	
																	Co_{rad} [N]	Co_{ax} [N]
RGNV43R	Concentric	guiding	-	31,4	14	9	2	6	⬣ 15	M8	10,5	-	-	-	50	7600	4000	1190
RGNP43R		floating		31,5								28,59	6	6		7600	4000	0
RGAV43R	Eccentric	guiding	0,8	31,4								-	-	-		7600	4000	1190
RGAP43R		floating		31,5								28,59	6	6		7600	4000	0

Tab. 6

Self-aligning combinations

When FXRG rails are used in parallel, the use of floating rollers R.P43G and guiding rollers R.V43G provides a Self-aligning system, capable of compensating greate inaccuracies of structure or assembly errors. The guiding rollers R.V43G in contact with the FXRG's gothic raceways assure precise guiding while compensating misalignment, as they are able to rotate slightly around the longitudinal axis of about +/- 5 °. Combined with floating rollers R.P43G on a parallel rail, such system can compensate an axial displacement of +/- 1 mm , in addition to a max. rotation of +/- 5 °.

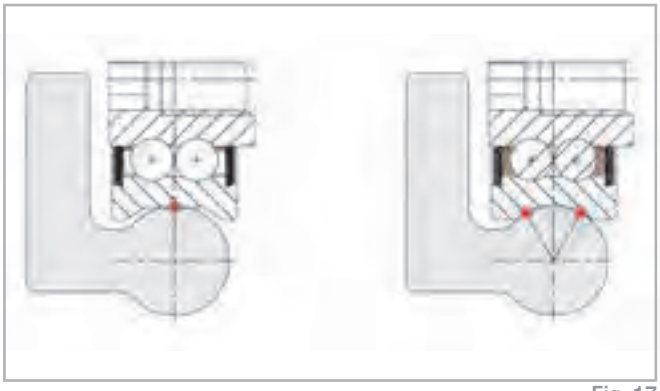

Fig. 17

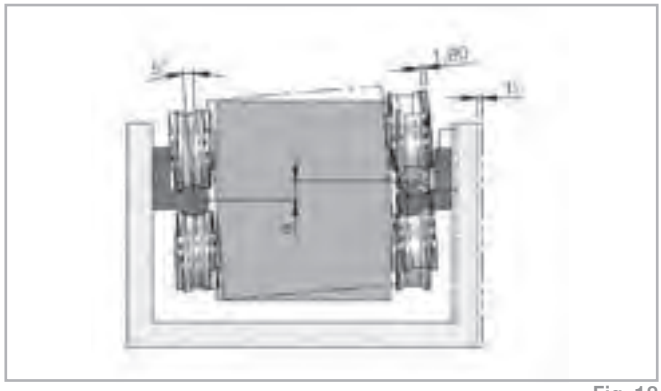

Fig. 18

Technical instructions

Mounting configurations

The concentric rollers should be positioned in the direction of radial loading. Warning! A single slider configuration will rotate +/- 5° around the longitudinal axis of a single FXRG rail, not able to take any Mx moments.

Single rail with 3 rollers slider

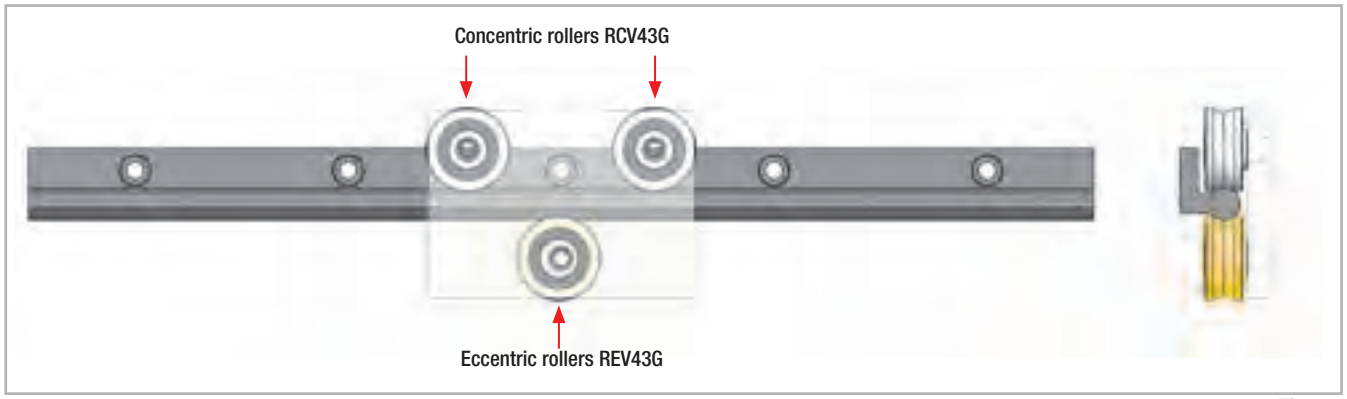

Fig. 19

It is recommended, when more than two rollers are on the same track with max. radial load, to use only two concentric rollers (as from example figure). The others should be eccentric. For cases with a wider distance between concentric rollers, please contact ROLLON's Technical departement for dimensioning.

Single rail with 5 rollers slider

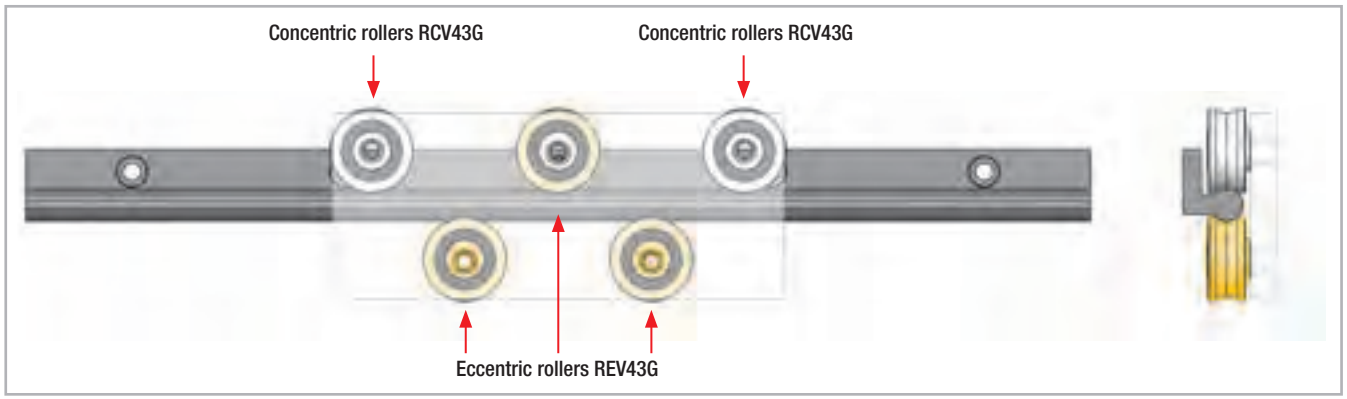

Fig. 20

Double rail with slider for high overturning moments

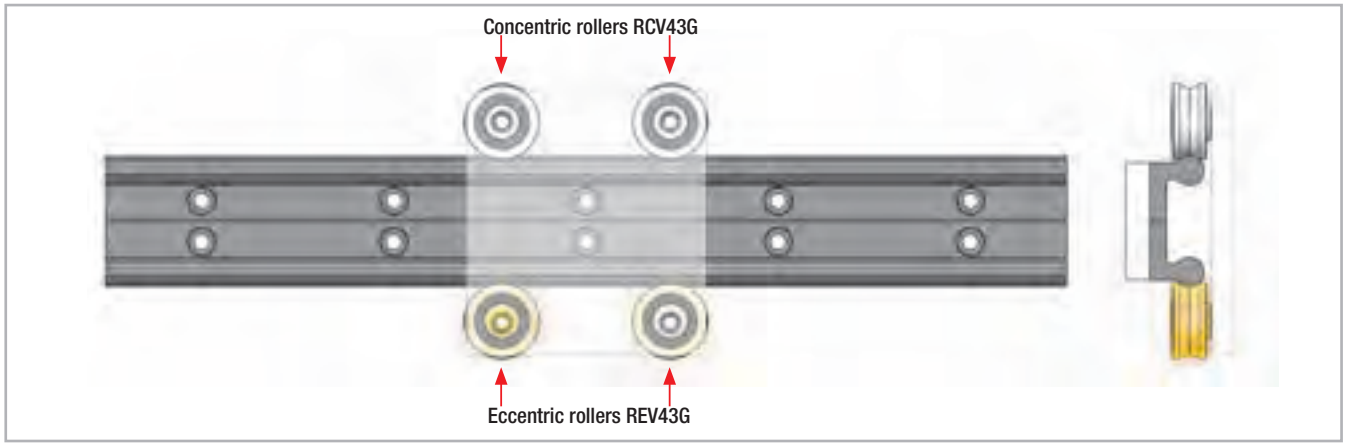

Fig. 21

The rollers need to be positioned on the rail in numbers and directions according to the prevailing load. It is always preferable to orient the rollers so that the prevailing load acts radially, due to higher radial load capacity.



Fig.22

The rollers must be fixed on a metal surface not yielding, perfectly flat and with its fixing screws, applying a locking torque of 22 Nm.
The tightening of the fixing-screw is to be performed, while holding the roller firm with an Allen-wrench, present on the opposite side of the fixing thread. In case eccentric rollers, it is advisable to use a cup-spring washer under the screw-head to obtain a firm movement, able to maintain the roller "firm" against the surface and facilitate minor adjustment of eccentric roller, before the final locking. The preload adjustment can also be carried out by checking the force Fi of insertion of the movable part, in which the rollers are fixed into the rail. In general for a good Fi adjustment, the inserting friction must be between 2-10 N. To increase or decrease the Fi act on eccentric rollers, opposite to the load direction (see figure below).

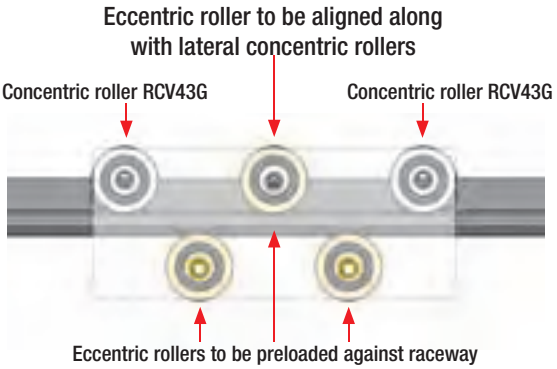



Fig. 23

In case required to have eccentric rollers on the internal rail side, it is necessary to include optional accesses, code FXRG-....C, to allow Allen-key to reach the roller. Otherwise the adjustment can take place outside of the rail.



Fig. 24

Lubrication

Roller pin lubrication

The bearings inside the Rollers are lubricated for life. To reach the calculated service life, a film of lubricant should always be present between the raceway and roller, this also serves to protect against corrosion of the ground raceways.

Lubrication of the raceways

Proper lubrication during normal conditions:

- reduces friction
- reduces wear
- reduces the load of the contact surfaces through elastic deformations
- reduces running noise

Joined Rails

If long guide rails are required, two or more rails can be joined to the desired length. When putting guide rails together, be sure that the register marks shown in fig. 25 are positioned correctly.
These are fabricated asymmetric for parallel application of joined guide rails, unless otherwise specified.

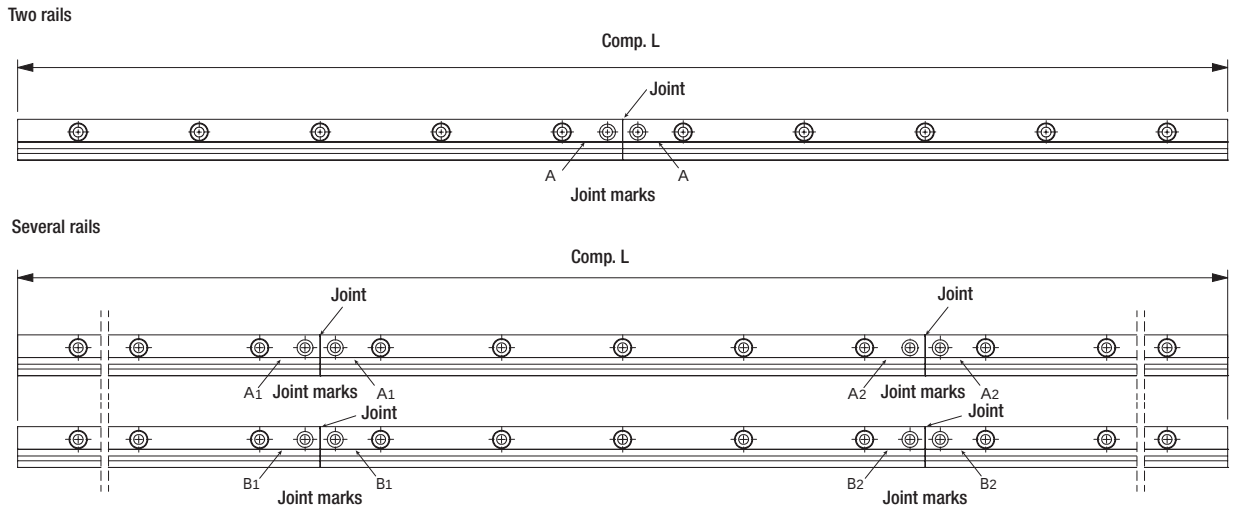

Fig. 25

General information

The maximum available rail length in one piece is indicated in table 4 on page OR-6. Longer lengths are achieved by joining two or more rails (joined rails).

Rollon then machines the rail ends at a right angle to the impact surfaces and marks them. Two additional threaded holes (see fig. 26) are required in the load-bearing structure. To ensure a problem-free transition of the slider over the joints, please follow the installation procedures next page.

For information about the structure holes, the additional screws required and the alignment fixture for aligning the rail joint, please see table 7 below.

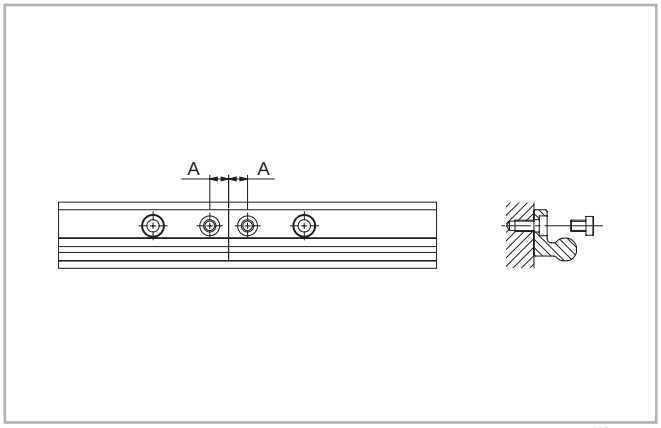

Fig. 26

Rail type	A [mm]	Threaded hole (load-bearing structure)	Screw type	Alignment fixture
FXRG	10	M6	M6 DIN 7984	ATFXR

Tab. 7

Installation of joined rails

After the fixing holes for the rails are made in the load-bearing structure, the joined rails can be installed according to the following procedure:
(1) Fix the individual rails on the mounting surface by tightening all screws except for each last one on the rail joint.
(2) Install the end fixing screws without tightening them (see fig. 27).

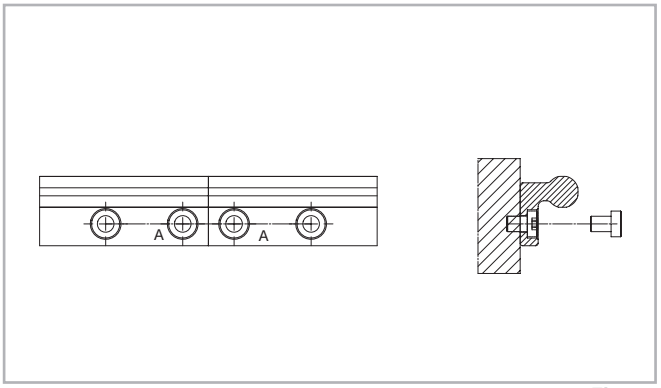

Fig. 27

(3) Place the alignment fixture on the rail joint and tighten both set screws uniformly, until the raceways are aligned (see fig. 28).
(4) After the previous step (3) it must be checked if both rail backs lie evenly on the mounting surface. If a gap has formed there, this must be shimmed.

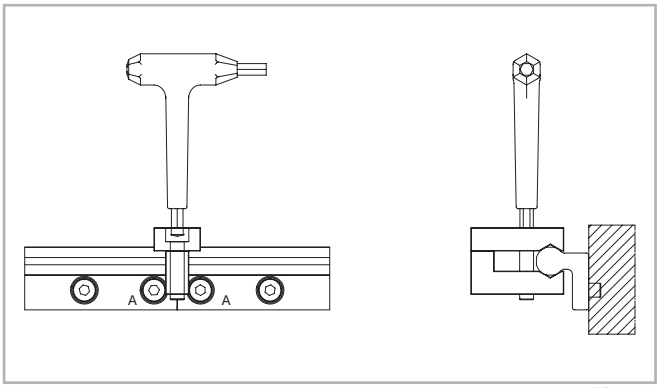

Fig. 28

(5) The bottom of the rails should be supported in the area of the transition. Here a possible existing gap must be looked for, which must be closed if necessary for correct support of the rail ends by shims.
(6) Insert the key through the holes in the alignment fixture and tighten the screws on the rail ends.
(7) Remove the alignment fixture from the rail.

Ordering key

O-Rail guide

FXRG	0960
	Length *see pg. OR-6ff*

Product type *see pg. OR-2ff*

Ordering example: FXRG-3120

Notes on ordering: Rail lengths and stroke lengths are always stated with 4 digits. Please pad with zeroes to fill in for lengths with less than 4 digits, e.g. 515mm length is “0515”

ROLLON®
BY TIMKEN

Prismatic Rail



Product explanation

Prismatic Rail: with cylindrical or V-shaped rollers



Fig. 1

The Prismatic Rail product family is composed of roller sliders sliding on V-shaped rails made of hardened steel. These linear guides also have high self-alignment properties.

V-shaped rails are induction hardened and polished, available in three sizes: 28, 35 and 55 mm. Rails can be machined with two straight cuts, one straight and one slanting cut or two slanting cuts. These options allow to create joinable versions, and thus obtaining longer strokes.

The aluminium slider can be configured with a variable number of rollers with steel pins, ranging from 3 to 6. Rollers are in turn available in two variants, cylindrical or V-shaped, with variable diameter from Ø30 a Ø62 depending on rail size.

The most important characteristics:

- Long life thanks to hardened raceways
- Optimal reliability in dirty environments
- Self-aligning system
- Simple mounting
- High dynamics

Preferred areas of application:

- Robot and handling systems
- Industrial automation
- Logistics
- Packaging machines

Drilled guide rails with straight cut:

Machining provided for guide rails with no joint.



Fig. 2

Drilled guide rails with one straight and one slanting cut:

Machining provided for the crop down sizes of guide rail ends with joints.



Fig. 3

Drilled guide rails with 2 slanting cuts:

Machining provided for the intermediate crop down sizes of guide rail ends with multiple joints.



Fig. 4

Sliders with rollers Ø30 - Ø40:

Floating and fixed sliders with rollers Ø30 (guide size 28) and Ø40 (guide size 35).



Fig. 5

Sliders with rollers Ø52- Ø62:

Floating and fixed sliders with rollers Ø52 and Ø62 (guide size 55).



Fig. 6

Assembly pins:

Steel pins.



Fig. 7

Technical data

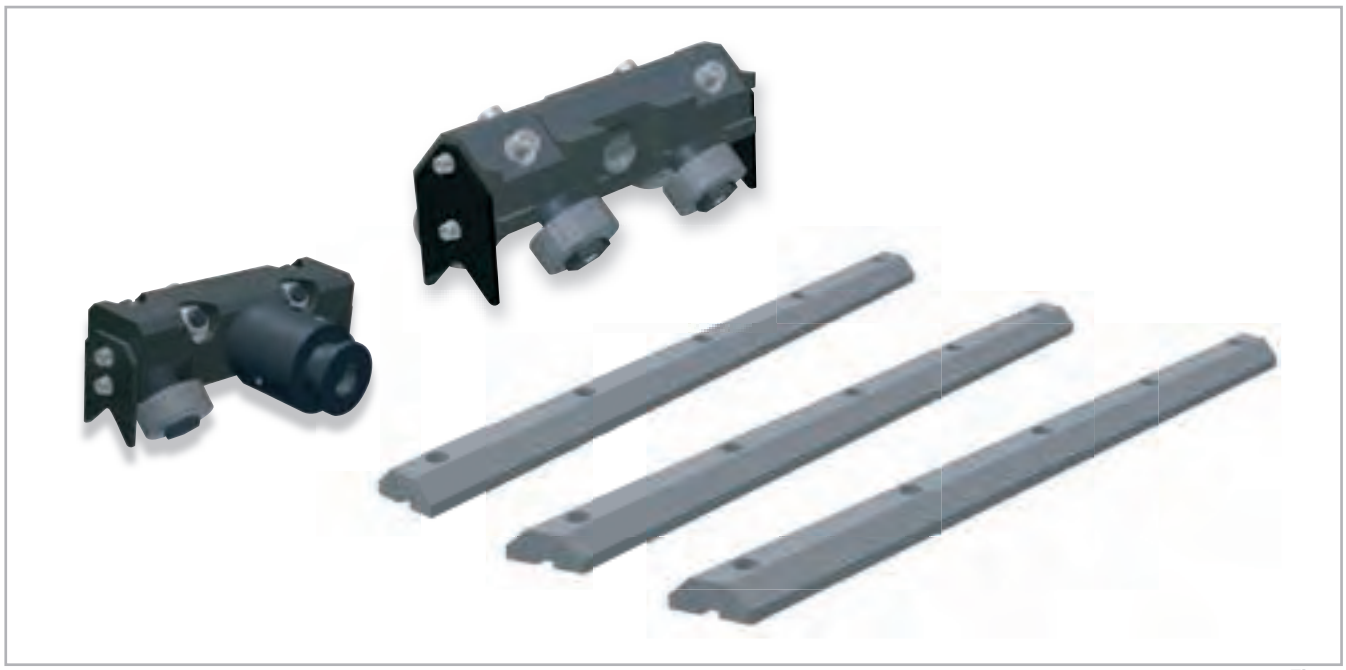

Fig. 8

Performance characteristics:

- Sizes available: 28,35 and 55 mm.
- Rollers dimensions: Ø30 - Ø40 - Ø52 - Ø62.
- V-shaped rollers in hardened C45 steel available for sizes 28 and 35.
- Aluminum sliders, floating and fixed, with 3, 4 or 6 rollers.
- Max. speed: 7 m/s (depending on application).
- Max. acceleration: 20 m/s² (depending on application).
- Max. radial load capacity: 15000 (per slider).
- Max. axial load capacity: 15000 (per slider).
- Operating temperature: from -10°C to +80°C.
- Induction hardened and polished rails.
- Max. rail length: 4100 mm.
- Steel assembly pins.

Notes:

- V-shaped roller with plastic compound shell are available upon request.
- Stainless steel pins and special variants are available upon request.
- Longer stroke achievable with joinable versions.
- V-shaped rails available in drilled or non-drilled versions.
- Please follow the diagrams in every slider section to ensure correct assembly.
- For applications with high projecting loads, the sliders' rollers must be adjusted so that the load is supported by the maximum possible number of them.

Product dimensions

Steel V-shaped rails

Material: high-performance alloy steel: R > 900 MPa
Hardened and tempered: core hardness 240 HB.

Induction-hardened and polished. Track hardness > 58 HRC

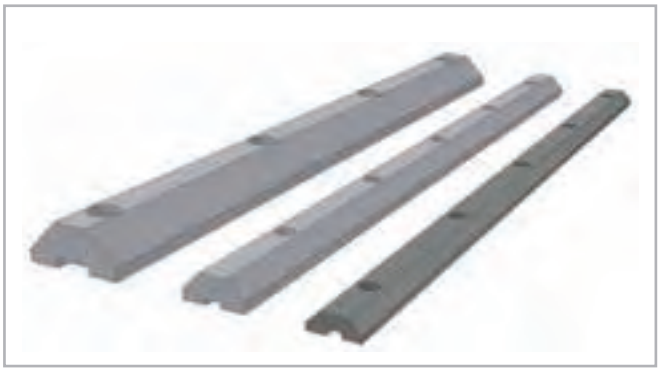

Fig. 9

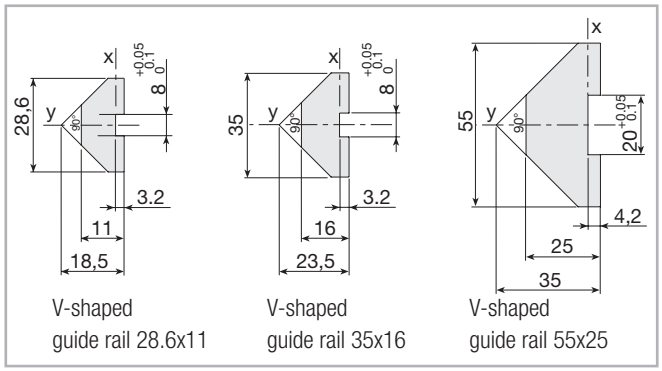

V-shaped guide rail 28.6x11 — V-shaped guide rail 35x16 — V-shaped guide rail 55x25

Fig. 10

Features	Moment of inertia Ix [mm4]	Moment of inertia Iy [mm4]	Weight [Kg/m]
28,6x11	2148	14490	2
35x16	7932	36405	3,5
55x25	41906	194636	7,8

Tab. 1

Machining: drilled guide rails with straight cut

P_ _ -.....F V-shaped guide rails, length L, **drilled**



Fig. 11

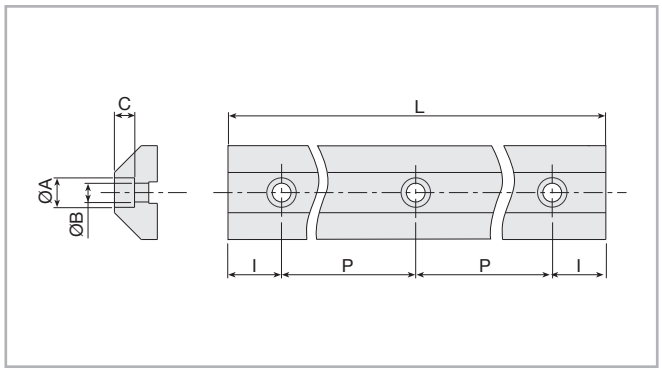

Fig. 12

Size	Treatment	L. max [mm]	P [mm]	I [mm]	A [mm]	B [mm]	C [mm]	Code
28,6x11	hardened	3980	150	40	11	7	5	**P28...**
35x16	Induction-hardened	4100	100	50	11	7	7,5	**P35...**
55x25	Induction-hardened	4100	150	25	18	11	11,5	**P55...**

Tab. 2

Machining: drilled guide rails with 1 straight and 1 slanting cut

P_ _ -.....FX V-shaped guide rails with 1 slanting cut, length L, **drilled**



Fig. 13

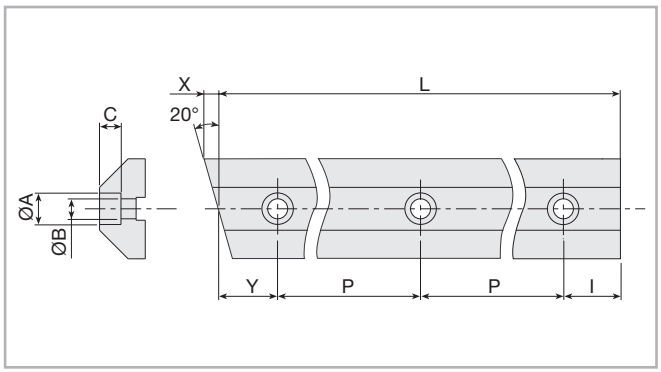

Fig. 14

Size	Treatment	L. max [mm]	P [mm]	Y [mm]	I [mm]	A [mm]	B [mm]	C [mm]	Code
28,6x11	hardened	3700	150	50	50	11	7	5	**P28...**
35x16	Induction-hardened	4000	100	50	50	11	7	7,5	**P35...**
55x25	Induction-hardened	3950	150	25	25	18	11	11,5	**P55...**

Tab. 3

Machining: drilled guide rails with 2 slanting cuts

P_ _ -.....FXX V-shaped guide rails with 2 slanting cuts, length L, **drilled**

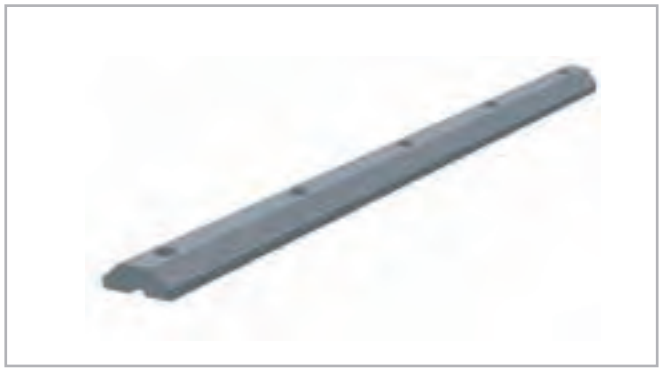

Fig. 15

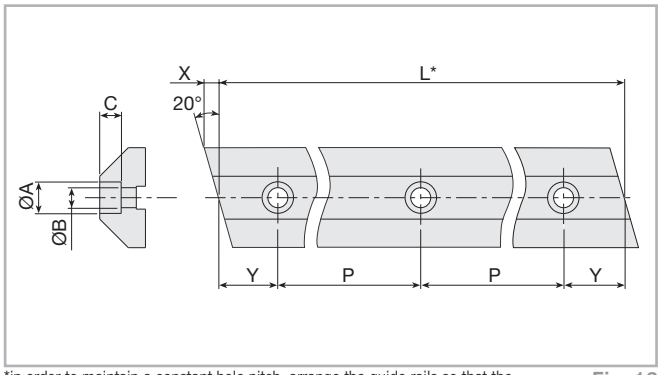

*in order to maintain a constant hole pitch, arrange the guide rails so that the length "L" is equal to: n•P + 2•Y

Fig. 16

Size	Treatment	L. max [mm]	P [mm]	Y [mm]	A [mm]	B [mm]	C [mm]	Code
28,6x11	hardened	3700	150	50	11	7	5	**P28...**
35x16	Induction-hardened	3900	100	50	11	7	7,5	**P35...**
55x25	Induction-hardened	3950	150	25	18	11	11,5	**P55...**

Tab. 4

Roller slides

Ø40 roller slides with 3 rollers, aluminium alloy castings (Rs=280 N/mm2). Ø30, Ø40, Ø52 and Ø62 roller slides with 4 or 6 rollers, extruded aluminium alloy (Rs=310 N/mm2). Alloy steel pins (Rs=800 N/mm2) Rollers with double rows of angular contact ball bearings, long-life.

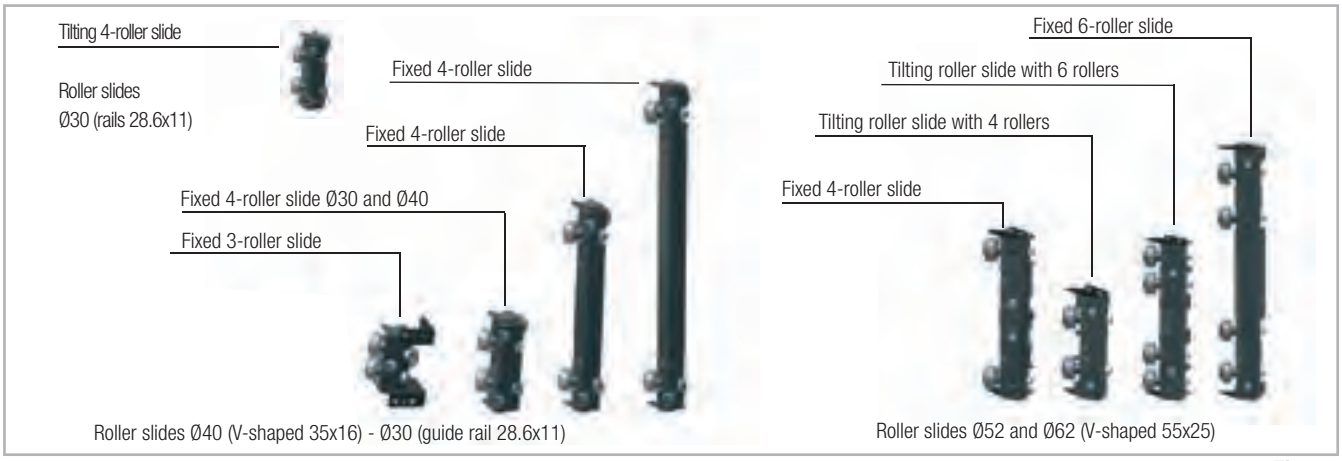

Fig. 17

Tilting roller slides with 4 rollers Ø30 for V-shaped guide rails 28x11

Use the roller slide eccentric pin to adjust the backlash along the plane between the guide rails.



Important: remove the space washers to enable self-alignment of the roller slide

Fig. 18

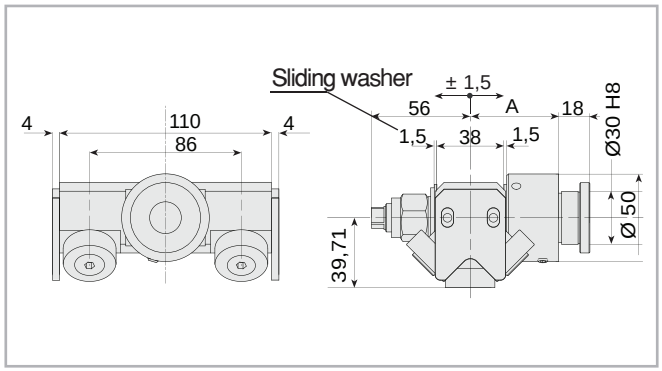

Fig. 19

	A [mm]	Load capacity C_{0rad} [N]	Weight [Kg]	Code
Roller slide with concentric pin	75	3818	1,8	204.0052
Roller slide with eccentric pin (±1 mm)	75	3818	1,8	204.0053
Roller slide with concentric pin	50	3818	1,4	204.0054
Roller slide with eccentric pin (±1 mm)	50	3818	1,4	204.0055

Tab. 5

Spare parts	A [mm]	Code
Complete body with rollers		204.0050
Concentric pin	75	236.0010
Eccentric pin (±1 mm)	75	236.0011
Concentric pin	50	236.0014
Eccentric pin (±1 mm)	50	236.0015

Tab. 6

Tilting roller slides with 4 rollers Ø40 for V-shaped guide rails 35x16

Use the roller slide eccentric pin to adjust the backlash along the plane between the guide rails.tino.

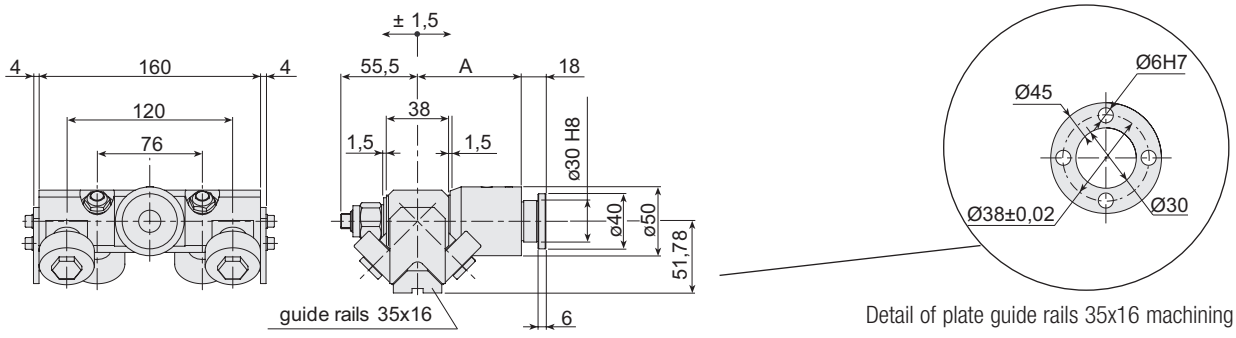

Important: remove the spacer washers to enable self-alignment of the roller slide

Fig. 20

	A [mm]	Load capacity C_{0rad} [N]	Weight [Kg]	Code
Slide with eccentric pin (±1 mm)	75	7071	2,2	204.0016
Slide with eccentric pin (±1 mm)	50	7071	1,8	204.0033

Tab. 7

Spare parts	A [mm]	Code
Complete body with rollers		204.0013
Eccentric pin (±1 mm)	75	236.0011
Eccentric pin (±1 mm)	75	236.0015

Tab. 8

All pins are eccentric, but are made concentric by inserting the pin in the specific hole on the plate, in order to determine the required preload.

Fixed 4-roller slide Ø40 for V-shaped guide rails V 35x16

Use the roller slide eccentric pin to adjust the backlash along the plane between the guide rails.

Important: machine the pin clamping plate as shown in Fig. A

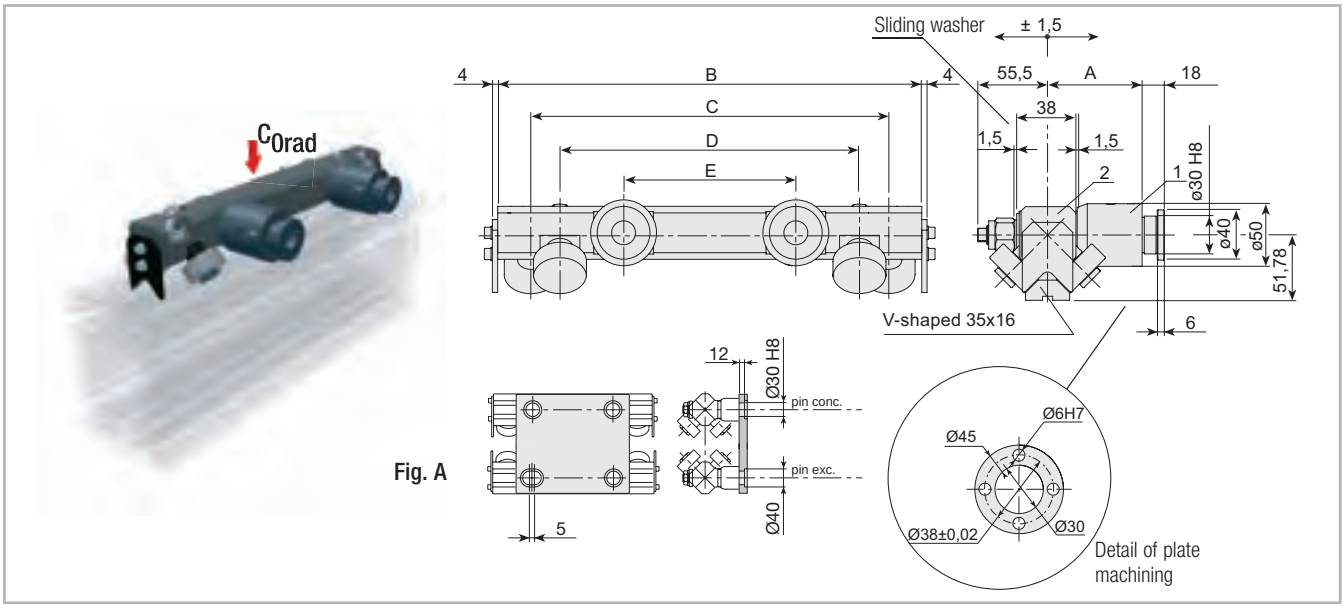

Fig. A

Important: remove the space washers to enable self-alignment of the roller slide sliding washers

Fig. 21

	A [mm]	Load capacity C_{0rad} [N]	Code
R. slide L=370 complete with exc. pin (± 1 mm)	75	7071	204.0018
R. slide L=600 complete with exc. pin (± 1 mm)	75	7071	204.0028
R. slide L=370 complete with exc. pin (± 1 mm)	50	7071	204.0031
R. slide L=600 complete with exc. pin (± 1 mm)	50	7071	204.0035

Tab. 9

R. slide spare parts (2)	B [mm]	C [mm]	D [mm]	E [mm]	Code
Roller slide L= 370	370	320	276	180	204.0005
Roller slide L= 600	600	550	506	410	204.0026

Tab. 10

Pin spare parts (1)	A [mm]	Weight [Kg]	Codice
Eccentric pin (± 1 mm)	75	4.1	236.0011
Eccentric pin (± 1 mm)	50	3.5	236.0015

Tab. 11

Type G roller slides (roller Ø52) and H type (roller Ø62) for V-shaped guide rails 55x25

Tilting 4-roller slides Suitable for assembly pins: Type 9

Use the roller slide eccentric pin to adjust the backlash along the plane between the guide rails.

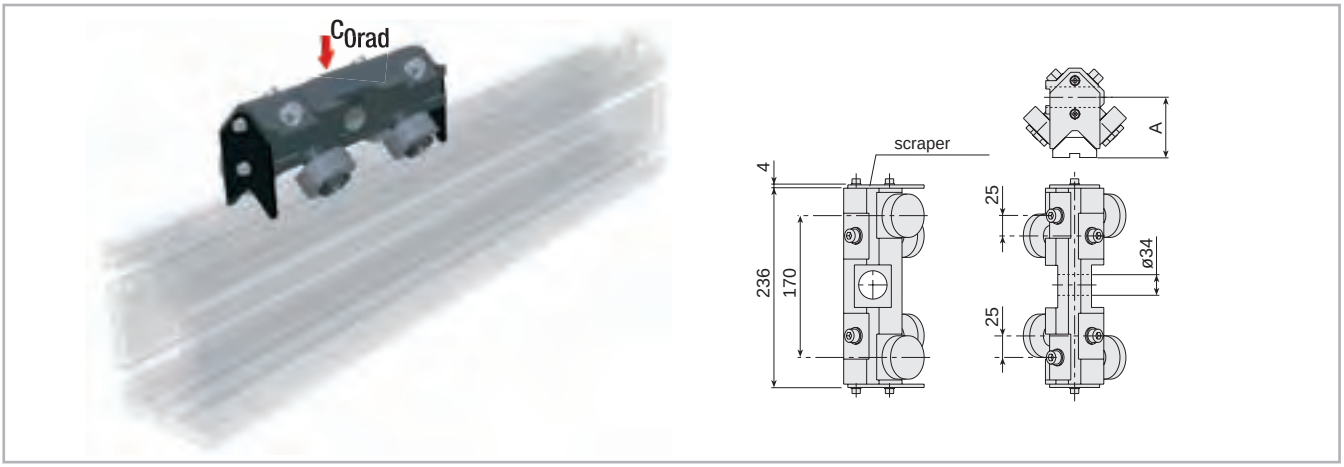

Fig. 24

Ø Rollers	A
Rollers Ø52	71,75
Rollers Ø62	78,85

Tab. 14

Technical caracteristics	Ø52	Ø62
Load capacity [N]	12021	14991
N° roller	4	4
Weight [Kg]	3,2	3,8
Spare parts code	204.1520	204.1521

Tab. 15

I-type roller slides (roller Ø52) and L-type (roller Ø62) for V-shaped guide rails V 55x25

Tilting 4-roller slides Suitable for assembly pins: Type 9

Use the roller slide eccentric pin to adjust the backlash along the plane between the guide rails.

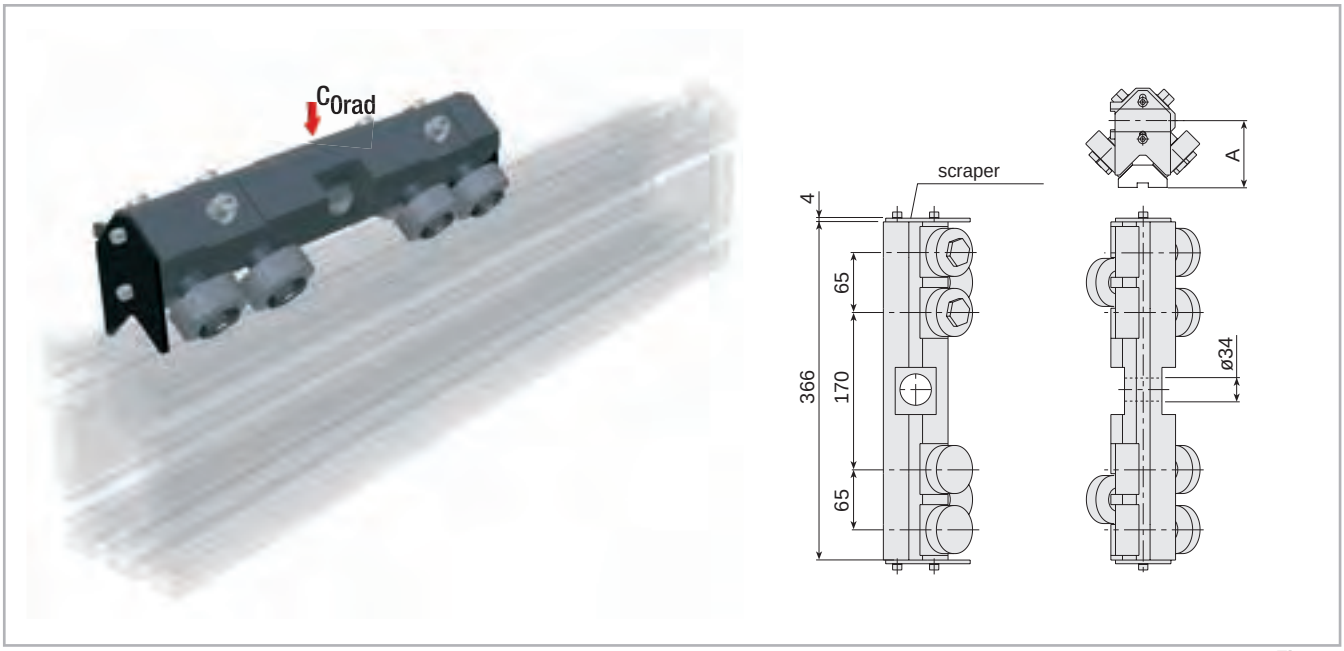

Fig. 25

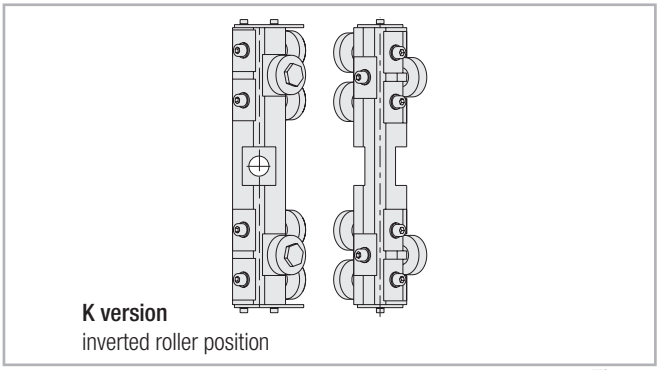

K version
inverted roller position

Fig. 26

Ø Roller	A
Roller Ø52	71,75
Roller Ø62	78,85

Tab. 16

Technical caracteristics	Ø52	Ø62
Load capacity [N]	12021	14991
N° rollers	6	6
Weight [Kg]	4,9	5,9
Spare parts code	204.1522	204.1523

Tab. 17

Accessories

V-shaped rollers (Guide Rails 28.6 x 11) anti-oxidized version

Shaped rollers with radial bearings with 2RS sealing (medium version).

* **IMPORTANT**: upon request, spacers can be supplied to increase the centre-distance between the guide rail and the roller supporting surface. In addition to theroller code, please indicate the required centre-distance (L). e.g. 205.0013.L



Fig. 29

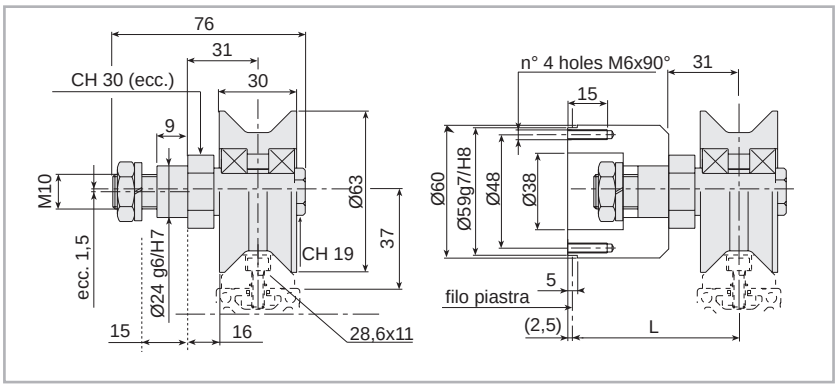

Fig. 30

Version	Type	Bearing	C (1cusc.)	Cw (2cusc.)	COw (2cusc.)	PR [N]	PA [N]	Speed [m/s]	Weight [Kg]	Code
Medium	Conc.	radial bearing	7800	9600	4800	1400	600	2,5	0,8	**205.0013**
Medium	Exc.	radial bearing	7800	9600	4800	1400	600	2,5	0,8	**205.0014**

Tab. 19

V-shaped rollers [rails 35 x 16]

Shaped rollers with two rows of angular contact ball bearings. With bilateral sliding sealing rings. Accuracy class P6.

They support loads along the axis of the pin provided Pa eff < 0.4 Pr eff.

* **IMPORTANT**: upon request, spacers can be supplied to increase the centre-distance between the guide rail and the roller supporting surface. In addition to the roller code, please indicate the required centre-distance (L). e.g. 205.0011.L



Fig. 31

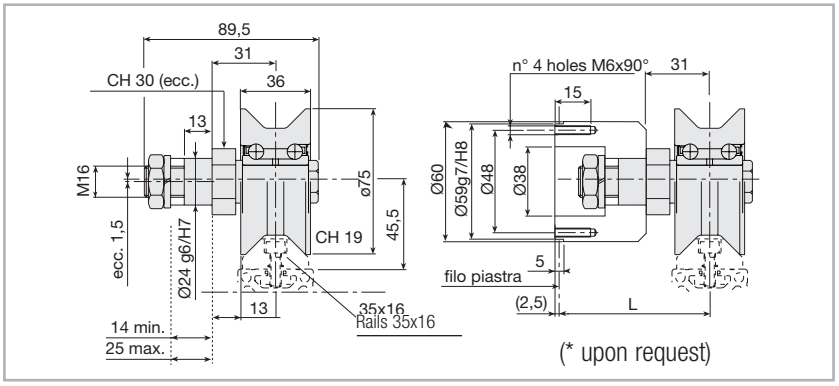

Fig. 32

Type	Bearing	C	COw (2cusc.)	PR [N]	PA [N]	Speed [m/s]	Weight [Kg]	Code
Conc.	angular contact	21000	13900	4500	1800	2,5	1	**205.0011**
Exc.	angular contact	21000	13900	4500	1800	2,5	1	**205.0012**

Tab. 20

Spare roller with pin

Make sure that all the components are locked in place with the appropriate screws. The recommended tightening torque for pin locking screws and nuts is 50 Nm.



Fig. 33

Max. load factors for induction-hardened guides

Roller	Cw [N]	COw [N]	Fr amm. [N]	V max.
Ø30	5100	3100	1350	7 m/s
Ø40	10000	7000	2500	7 m/s
Ø52	16700	10700	4250	6 m/s
Ø62	21500	14500	5300	5 m/s

Tab. 21

Spare roller with pin	Weight [Kg]	Code
Ø30 Concentric	0,02	**406.0056**
Ø40 Concentric	0,22	**205.0464**
Ø40 Eccentric (± 0.75 mm)	0,25	**205.0463**
Ø52 Concentric	0,4	**205.0163**
Ø62 Concentric	0,55	**205.0165**

Tab. 22

Assembly Pins

Material: burnished steel (Rs=800 N/mm2). Special variants upon request. AISI 303 stainless steel versions are available upon request. Types 0-7-8-9 are complete with self-lubricating bushings to make roller slide self-adjustments easier.

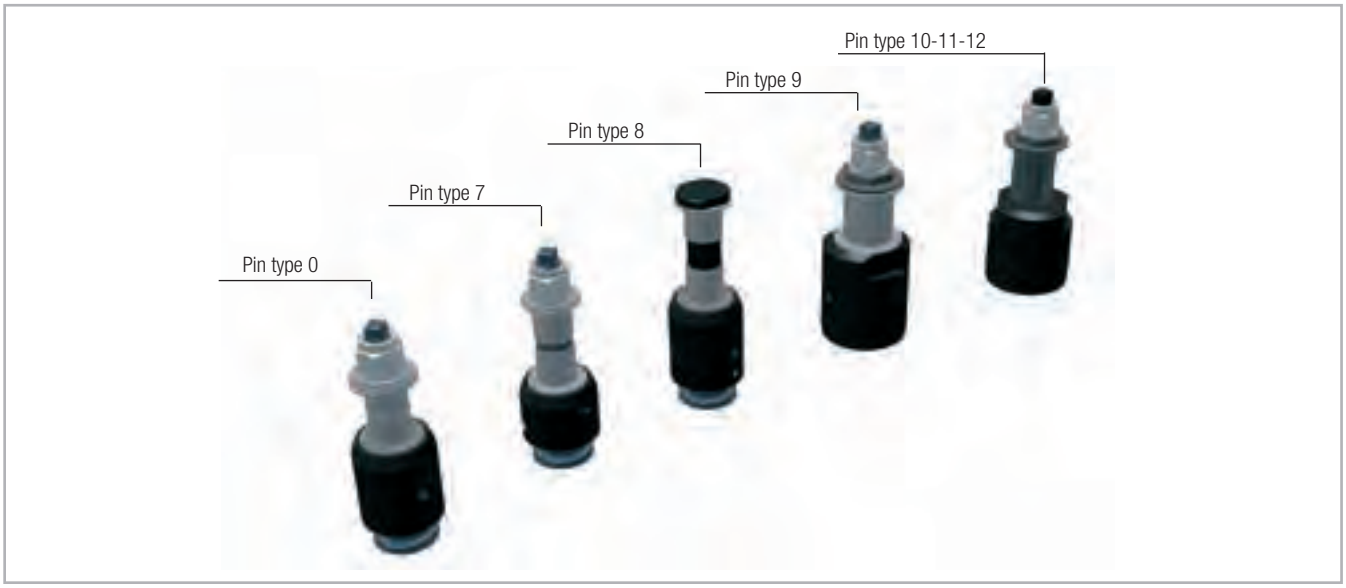

Fig. 34

Type 0 assembly pins suitable for roller slide Ø30 and Ø40

* **Important**: machine the pin clamping plate as shown in Fig. A

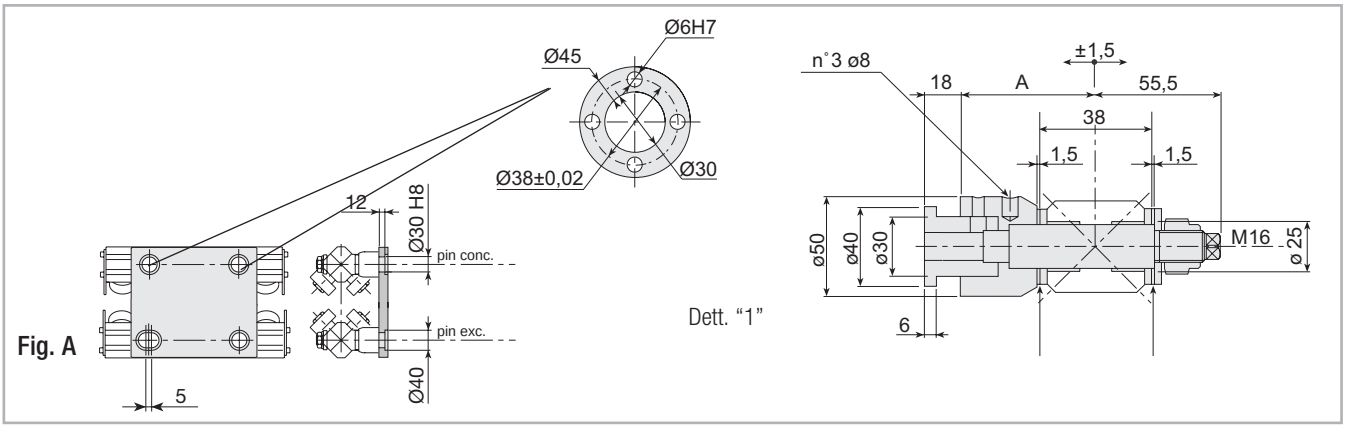

Fig. 35



Fig. 36

Important: remove the spacer washers to enable self-alignment of the roller slide

Technical caracteristics	A [mm]	
Weight [Kg]		1,1 approx.
Eccentric code (±0,75 mm)	75	236.0011
Eccentric code (±0,75 mm)	50	236.0015

Tab. 23

Type 7 assembly pins suitable for roller slide E-F

* **Important**: machine the pin clamping plate as shown in Fig. A

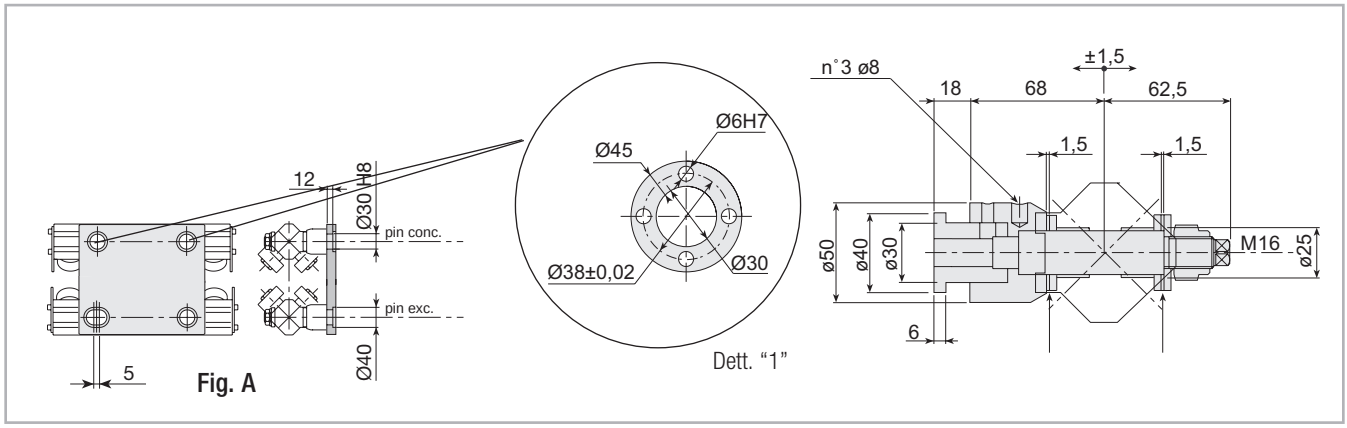

Fig. 37



Fig. 38

Important: remove the spacer washers to enable self-alignment of the roller slide

Technical caracteristics	
Weight [Kg]	1,1 circa
Eccentric code (± 1 mm)	236.1689

Tab. 24

Assembly pins type 8 suitable for carriage E-F

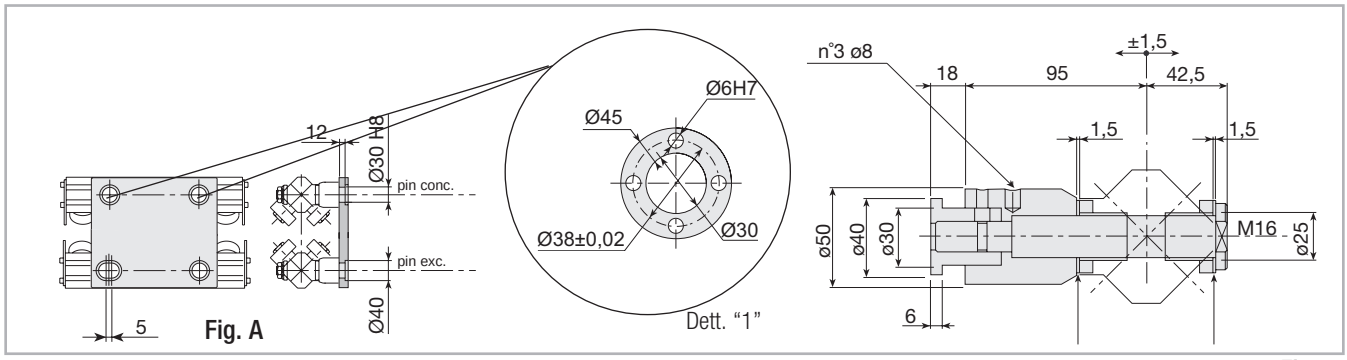

Fig. 39



Fig. 40

Important: remove the spacer washers to enable self-alignment of the roller slide

Technical caracteristics	
Weight [Kg]	1,8 approx.
Eccentric code (±1 mm)	236.1691

Tab. 25

Type 9 assembly pins suitable for tilting roller slides G-H / I-L



Fig. 41

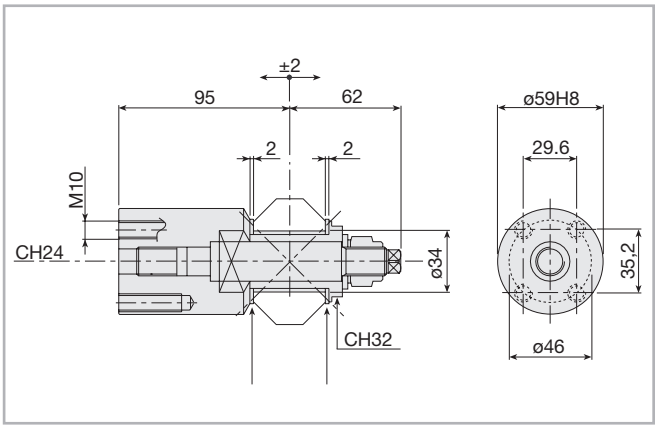

Fig. 42

Important: remove the spacer washers to enable self-alignment of the roller slide

Technical caracteristics	
Weight [Kg]	2 circa
Concentric code	236.2076
Eccentric code (± 1,5 mm)	236.2079

Tab. 26

Type 10-11-12 assembly pins suitable for tilting roller slides P-Q



Fig. 43

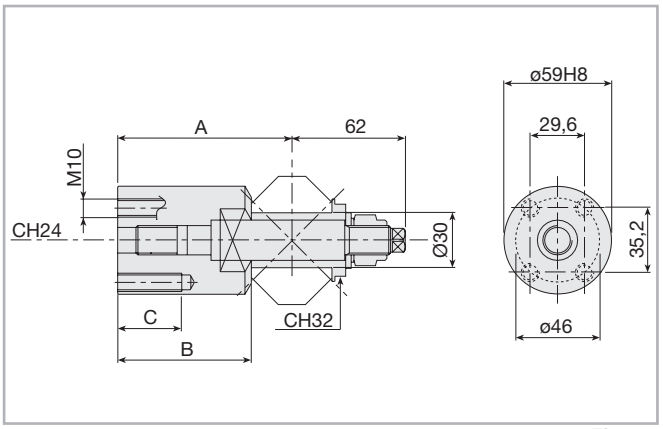

Fig. 44

Type	A [mm]	B [mm]	C [mm]	Weight [Kg]	Exc. code (±1,5 mm)
10	95	73	35	2	236.2083
11	87	65	27	1,8	236.2089
12	78	56	18	1,7	236.2091

Tab. 27

V-shaped guide rail assembly inserts

Material: C40 galvanized steel.

A and C: suitable for medium profiles

B and D: suitable for load-bearing profiles



Fig. 45

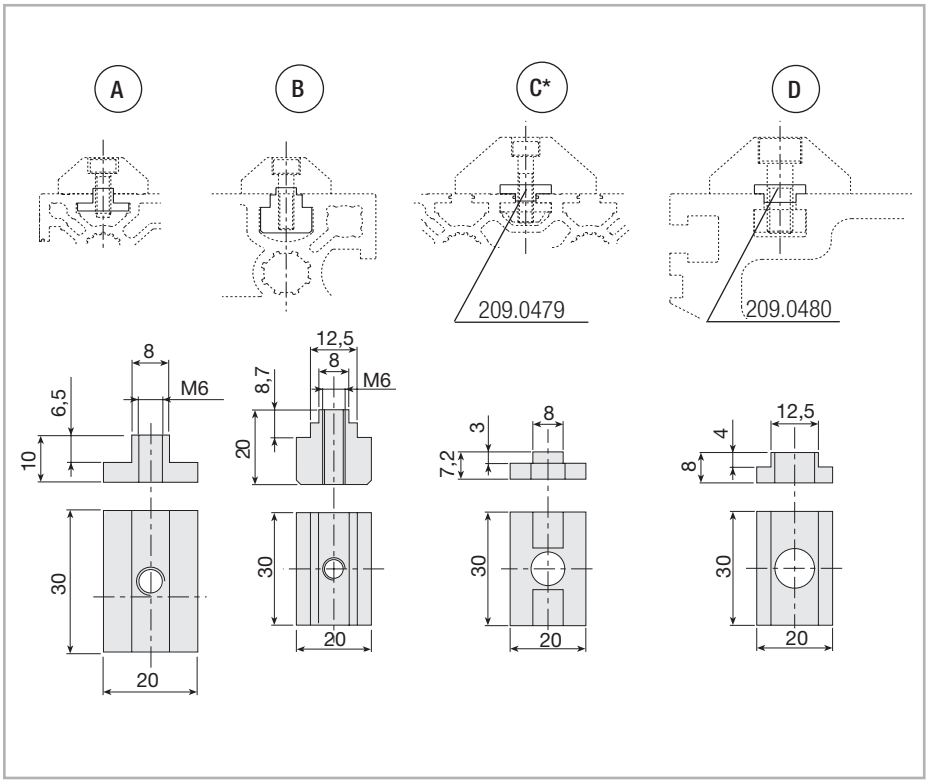

Fig. 46

* Special drilling for M8 screws instead of M10 is required.

Guide rails	Slot side	Screw	Code
A 35x16/28,6x11	8	M6x20	209.0298
B 35x16	12,5	M6x25	209.1855
C* 55x25	8	M8x30	209.0479
D 55x25	12,5	M10x30	209.0480

Tab. 28

Technical instructions

Rollers and V-shaped guide rails 28.6x11 and 35x16

Material: Hardened and burnished C45 steel covering; burnished steel pins and bolts. Rollers with shaped plastic cover are available upon request. Rollers with longer centre-distance L can be supplied.

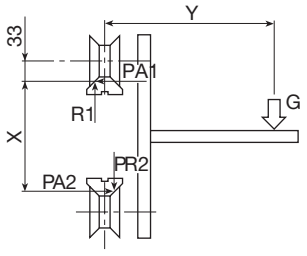

$P_{A1} = \frac{G \bullet Y}{X} = P_{A2}$

$P_{R1} = G + P_{A1}$

$P_{R2} = P_{A2}$

$X = A + 20$ mm

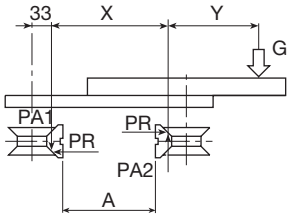

$P_{A1} = \frac{G \bullet Y}{X}$

$P_{A2} = P_{A1} + G$

$X = A + 20$ mm

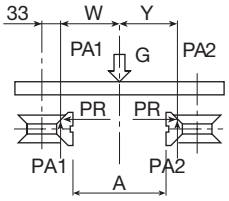

$P_{A1} = \frac{G \bullet Y}{W + Y}$

$P_{A2} = G - P_{A1}$

$X = A + 20$ mm

Fig. 47

Application diagram common to 2-roller slides

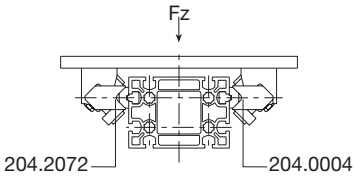

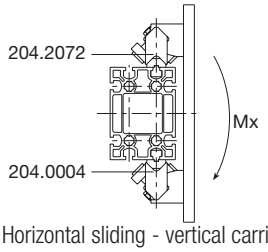

Horizontal sliding - vertical carriage

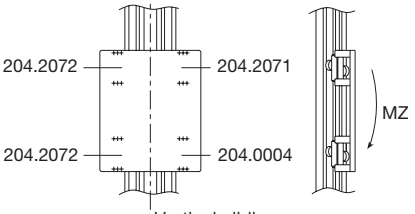

Vertical sliding

Fig. 48

Application diagram common to 3-roller slides

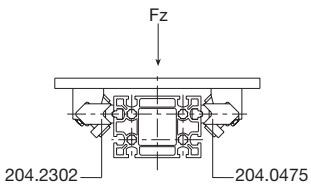

Horizontal sliding
Symmetric load

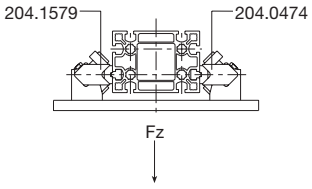

Horizontal sliding
Inverted load

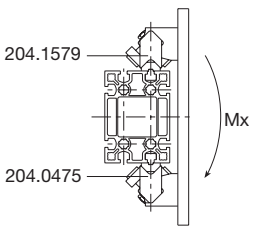

Horizontal sliding
Vertical carriage or asymmetric load

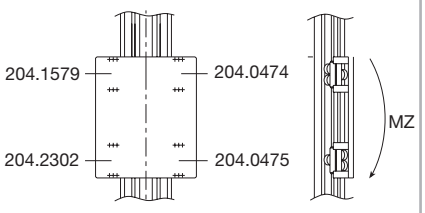

Vertical sliding

Fig. 49

Ordering key

Identification codes for roller slides and pins

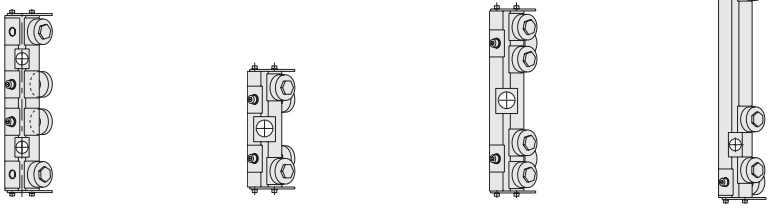

	PIN	Roller sl.	E (Ø 52)	F (Ø 62)	G (Ø 52)	H (Ø 62)	I (Ø 52)	L (Ø 62)	P (Ø 52)	Q (Ø 62)
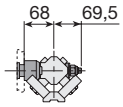	7	conc	-	-	-	-	-	-	-	-
		exc.	204.1345	204.1348	-	-	-	-	-	-
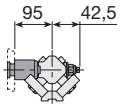	8	conc								
		exc.	204.1345	204.1349						
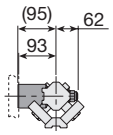	9	conc	-	-	204.2092	204.2093	204.2094	204.2095	-	-
		exc.	-	-	204.2102	204.2103	204.2104	204.2105	-	-
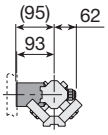	10	conc	-	-	-	-	-	-	204.2096	204.2097
		exc.	-	-	-	-	-	-	204.2106	204.2107
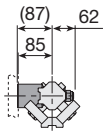	11	conc	-	-	-	-	-	-	204.2098	204.2099
		exc.	-	-	-	-	-	-	204.2108	204.2109
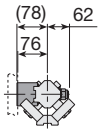	12	conc	-	-	-	-	-	-	204.2100	204.2101
		exc.	-	-	-	-	-	-	204.2110	204.2111

Tab. 29

Identification codes for Prismatic Rail guide

P	28 35 55	J	1100	F	XX X = Single slanting cut XX w= Double slanting cut
				Drilled	
			Length		
		J = jointed rails (only when required)			
	Size				
Linear guides series Prismatic Rail					

Ordering example: P55-2750FX, P55-2600FXX, P55-J5200FC01

Notes on ordering: the rail length codes are always 4 digits; use zeroes as a prefix when lengths are shorter.

In case of jointed rails it is necessary to send the segmentation order.

Assembly of standard carriages / K version carriages

IMPORTANT: for applications with high projecting loads, the rollers of the slides must be adjusted so that the load is supported by the maximum possible number of rollers. If this means arranging the rollers symmetrically with respect to the standard roller slide version, please add the letter K at the end of the code when filling in the order form. However, the roller assembly can also be inverted at a later date, by disassembling the pins and rollers and then reassembling them in the opposite way.

Example:

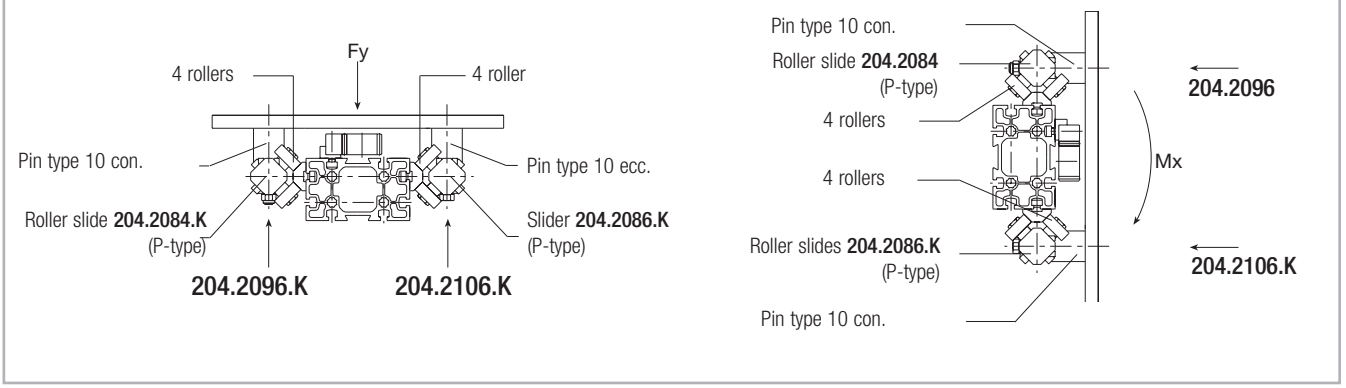

Fig. 50

Notes

ROLLON®
BY TIMKEN

Speedy Rail



Product explanation

Self-supporting and self-aligning extruded aluminum linear guides



Fig. 1

Speedy Rail® beam is a heat-treated aluminium alloy profile with hollow cross-sections which makes it very strong under torsion and deflection stresses. Beams are then subject to a special patented treatment which provides a smooth, hard (700 HV) surface comparable to tempered steel. The fusion point of the non-stick surface layer (2100°C) permits an excellent resistance to welding splatters.

For these reasons the **Speedy Rail®** beams and components are widely used in the automotive industry to build transfer systems (lift & carry) for automated welding lines.

Speedy Rail® linear motion systems are lightweight, self-supporting, easy to assemble, inexpensive, modular, clean, quiet and ex stock. **Speedy Rail®** assemblies are very simple. Standard bolted dovetails and fishplate clamps are used for end to end joining. Rails are available in single beam up to max length 7.5 meters – 24.6 feet – and can be joined end-to-end with dovetails to build a transfer system of unlimited length. Rails have a dovetail groove on each side to accommodate any fixture. In this way it is not necessary to drill or to weld. The profiles Wide Body SR 180, Super Wide Body SR 250 are equipped with grooves and have a planarity precision so that guideways can be fixed without any mechanical machining.

The most important characteristics:

- Standard modular components
- All parts reusable
- Minimum space required
- Narrow profile
- Hard surface
- Resistance to welding splatters
- Quiet smooth operations
- Resistance to high corrosion
- Saving in assembly time
- Strong, lightweight
- Savings in reducing drive size
- Only hand tools required to assemble or modify

Preferred areas of application:

- Automotive assembly
- Woodworking and furniture
- Glass processing
- Painting lines
- Food industry
- Sheet working and laser cut machines
- Plastic extrusion, machine tools
- Appliances assembly and production
- Cardboard handling machines
- Packaging
- Tiles, shingles production
- Welding lines

Technical data

Dimensions

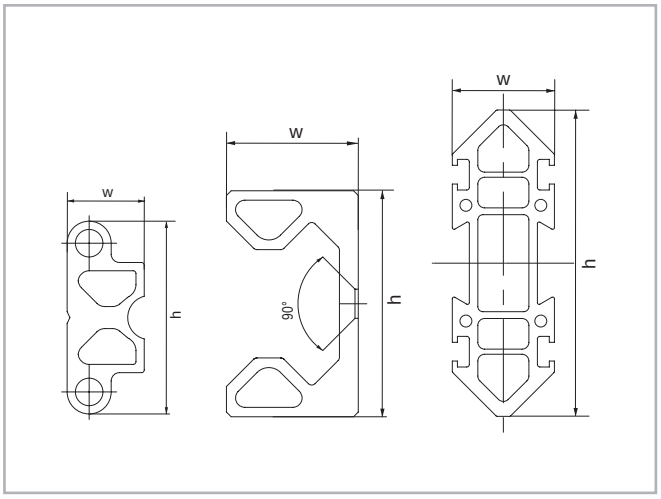

Fig. 2

Speedy Rail® guides are available in the following sizes:

Type	h [mm]	w [mm]
Speedy Rail 35	35	14
Speedy Rail C 48	48	28
Speedy Rail Mini	60	20
Speedy Rail Middle	90	30
Speedy Rail Standard	120	40
Speedy Rail Wide Body	180	60
Speedy Rail Super Wide Body	250	80

Tab. 1

Rollers and roller assemblies:

The **Speedy Rail®** range includes a large selection of rollers both cylindrical and "V" shaped and roller assemblies with two or more rollers. Our rollers are covered by a sintered plastic compound, resistant to pollutants and virtually maintenance-free. Ball and/or needle bearings with high performance are mounted into the rollers and can be maintained either with standard greasing procedure or lifetime lubricated. All roller boxes are equipped with concentric and eccentric pins for a quick adjustment of the contact between rollers and rail.

- Standard
  with 2 rollers, 1 concentric and 1 eccentric
- Blindo Beam®
  with 4 or 8 rollers. It provides 3 mounting surfaces
- Compact
  with 2 rollers. Suitable for low clearances and limited operation room
- Floating
  with 4, 6 or even more rollers. Suitable for the withstanding minor misalignments on the rail mounted in pairs, one concentric and one eccentric
- "V" roller support
  This kind of support are suggested for light applications and constricted operation areas

Supports are mounted on the frame when the rail is movable and on the trolleys when it is fixed. By the calculation of system needs, consider the max. radial load applicable to the rollers in accordance with the description of each roller.

Speedy Rail 35

"Speedy Rail 35" guide and specification

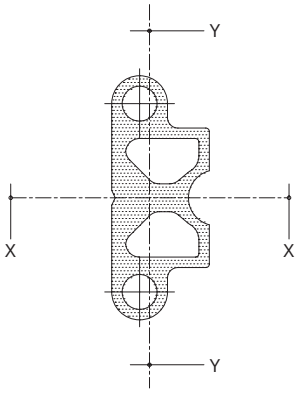

Fig. 3

Surface quadratic moments: X-X axis = 17.779 mm4 / Y-Y AXIS = 3.665 mm4.

Area = 222 mm2

Max. angular distorsion = ±20'/m.

Linear mass = 0.55 Kg/m.

Max. Linear distorsion = 0.5 mm/m.

Standard lengths: 1000-1500-2000-2500-3000-3500-4000-4500 mm.

External surface: deep hard anodizing

"Speedy Rail 35" assemblies and components

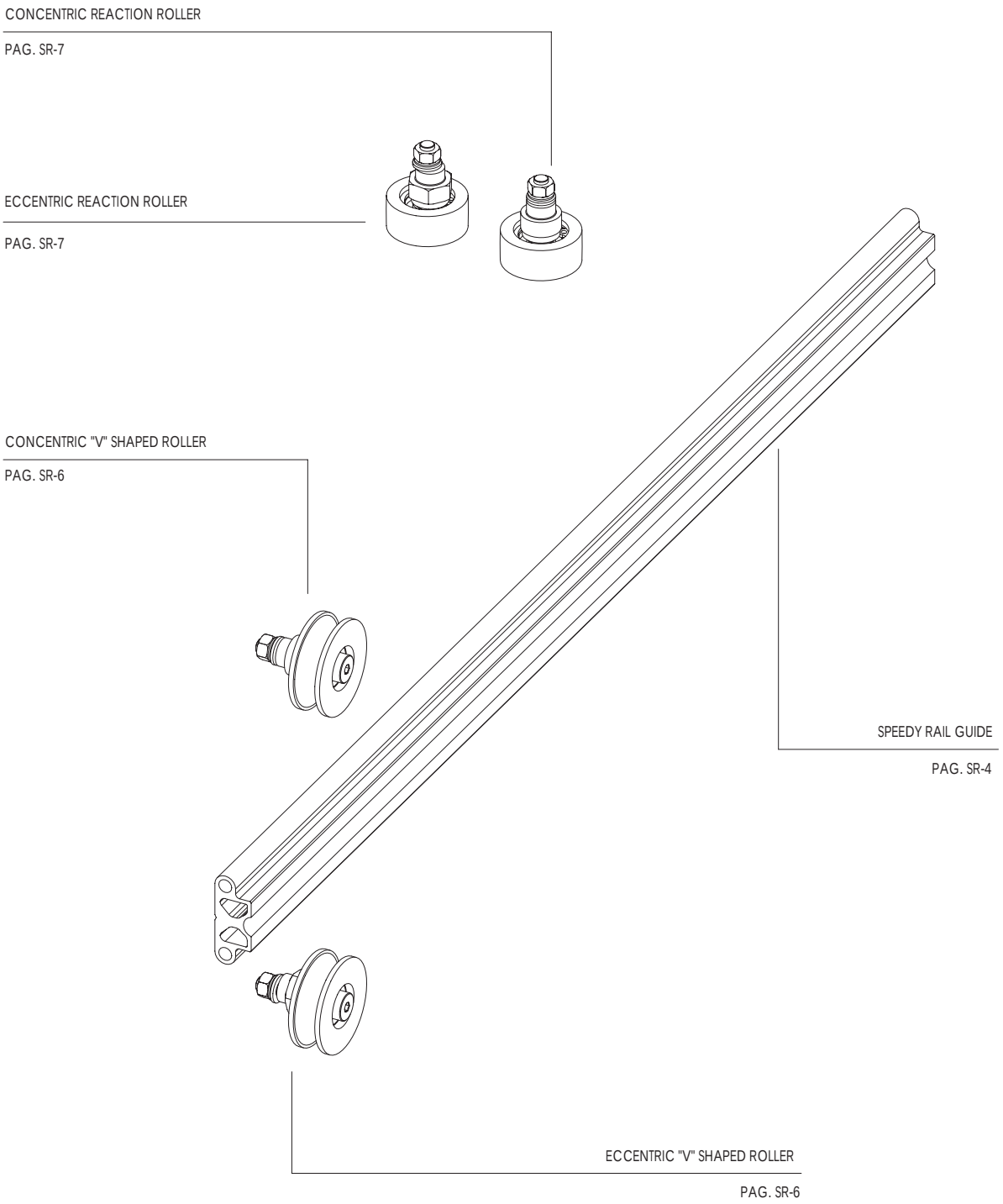

Fig. 4

Speedy Rail guide with plain ends

SIMP - T

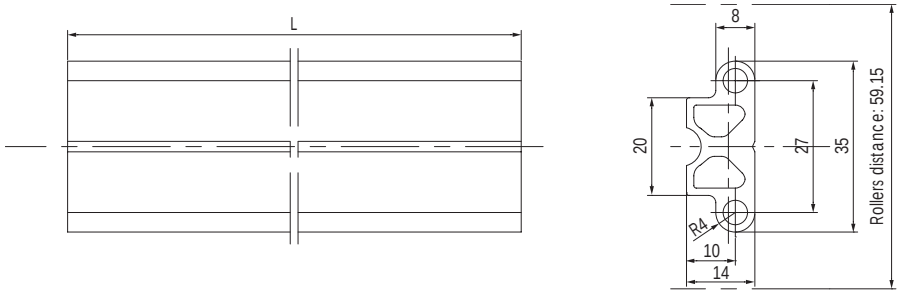

Fig. 5

Drilled Speedy Rail 35 guide - Order code 411.1405/length in mm.

SIMP - F

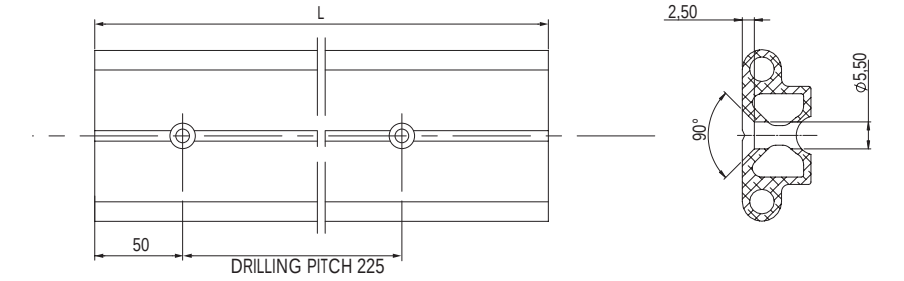

Fig. 6

Plastic compound eccentric roller,
max load: radial 200 N, axial 100 N

ROL-E034UC-B

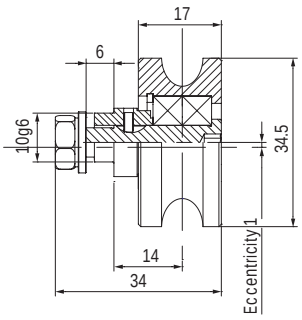

Fig. 7

Plastic compound concentric roller,
max load: radial 200 N axial 100 N

ROL-C034UC-B

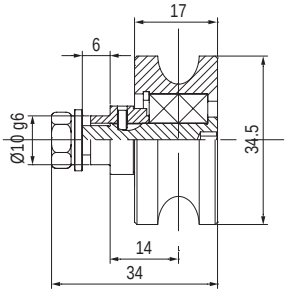

Fig. 8

Plastic compound concentric contrast roller,
max radial load 200 N

ROL-C030CC-B

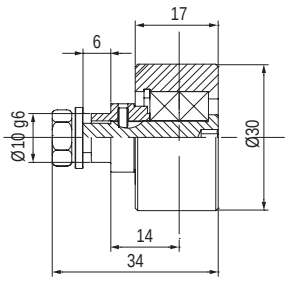

Fig. 9

Plastic compound eccentric contrast roller,
max radial load 200 N

ROL-E030CC-B

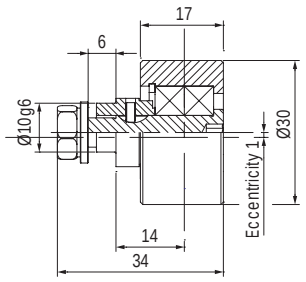

Fig. 10

Sliding doors "Speedy Rail 35" application example

Overturning locking upper rollers
Supporting lower rollers

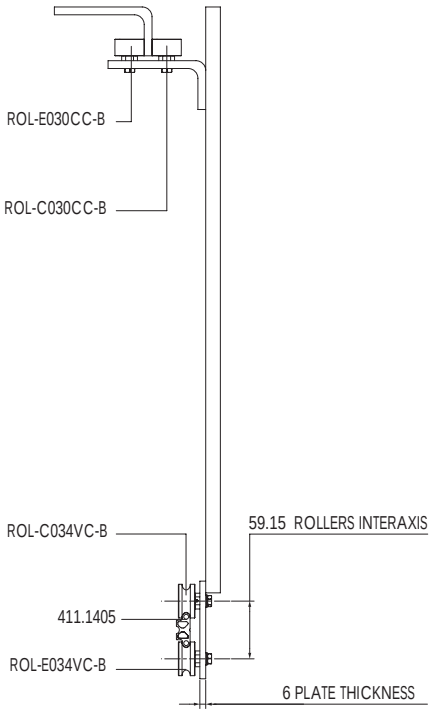

Fig. 11

S
R

Speedy Rail C 48

"Speedy Rail C 48" guide and specification

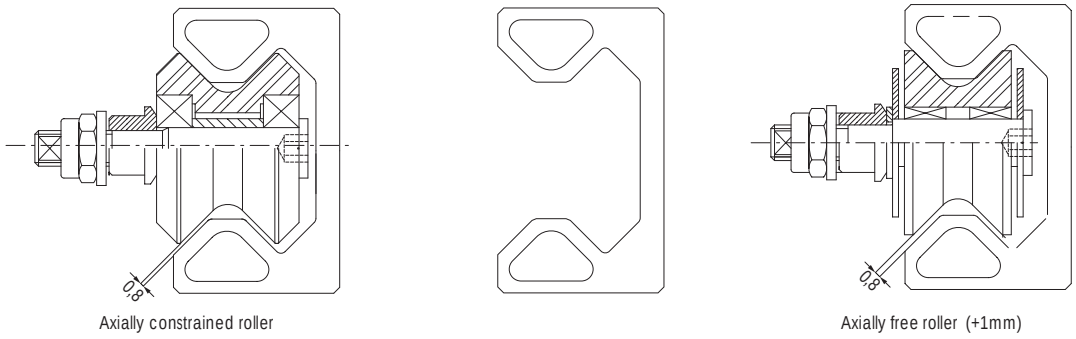

Fig. 12

"Speedy Rail C 48" guide

Material: alluminium alloy with hardened surface (700 Hv)

Surface quadratic moments: "I" XX AXIS= 152.026 mm4 "I" YY AXIS= 36.823 mm4

Section modules: W (X) = 6334 mm3 / W (Y)= 2045 mm3

Distance betweeen the centre line of opposite rolling lanes: 28,86 mm

Linear mass = 1,42 kg/m.

Max. Angular distorsion = ±20'/m max.

Max. linear distorsion = ±0,4 mm/m. Max.

Standard lenghts: 500-1000-1500-2000-2500-3000-3500-4000-4500-5000-5500-6000-6500-7000-7500 mm.

Exterior treatment: deep hard anodizing

Rollers

Supported by ball or needle bearings. The external surface is finished with plastic compound

Speedy Rail C 48 guide without holes

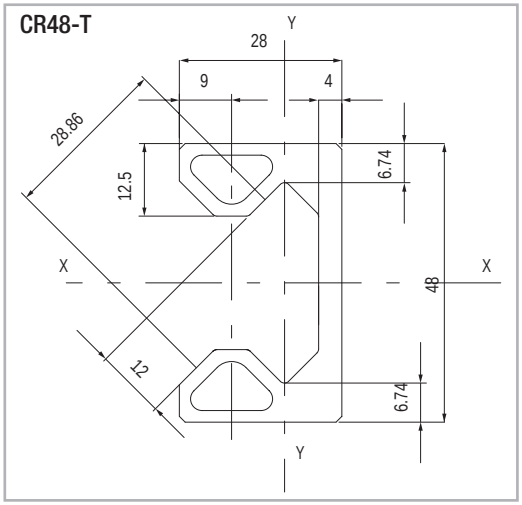

Fig. 13

Drilled Speedy Rail C 48 with holes for front fixing

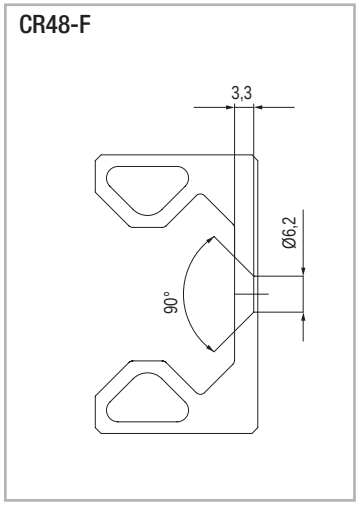

Fig. 14

Drilled Speedy Rail C 48 with holes for rear fixing

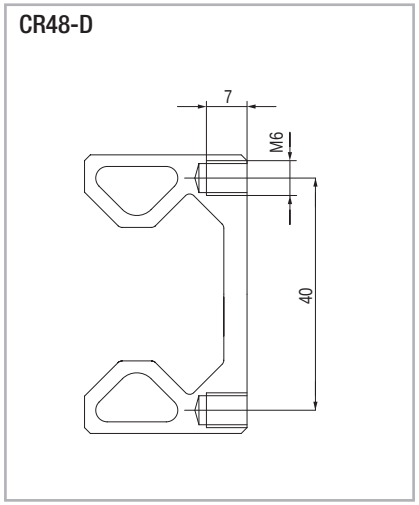

Fig. 15

"Speedy Rail C 48" assemblies and components

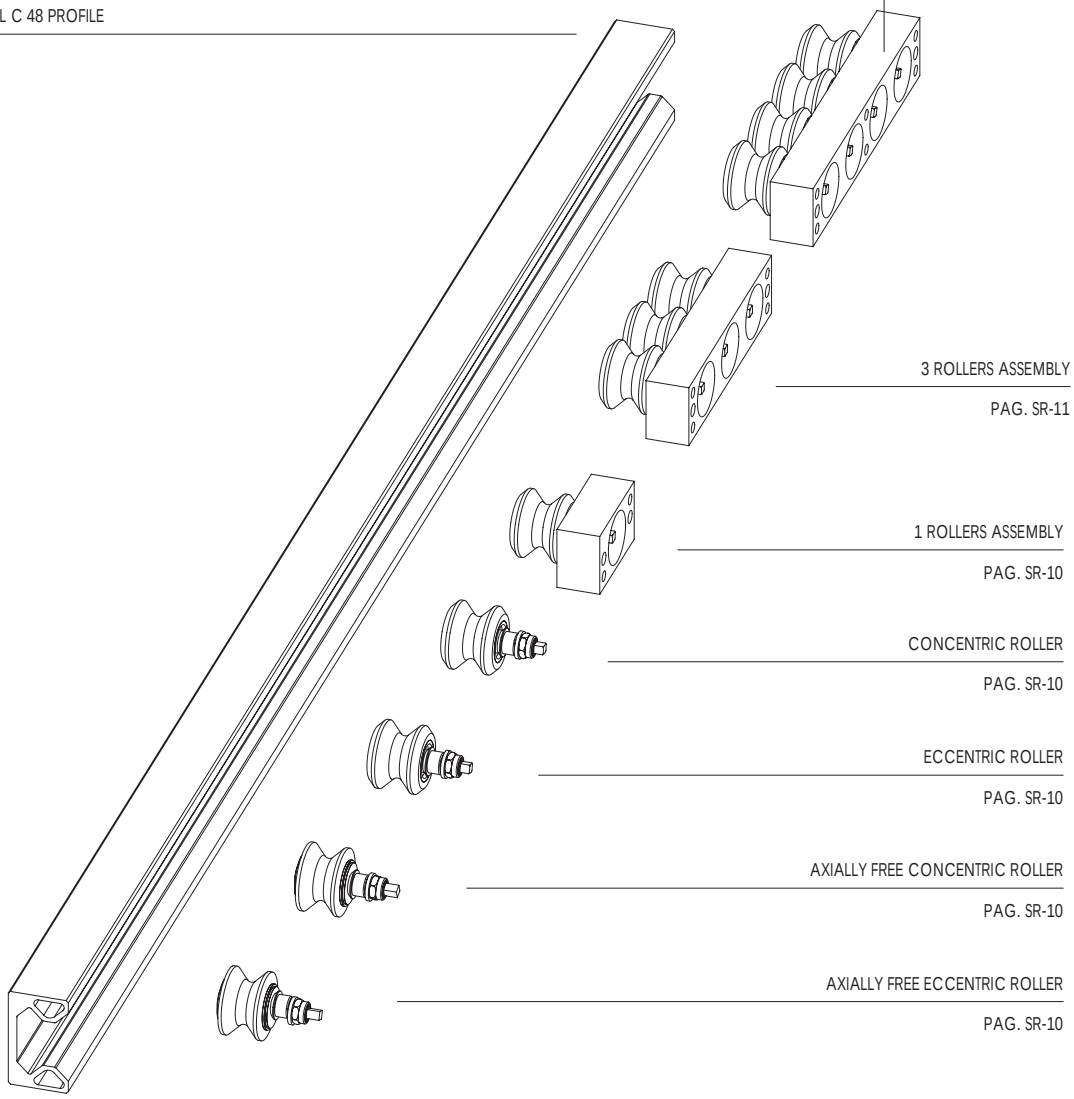

Fig. 16

Rollers and roller boxes for "Speedy Rail C 48" guide

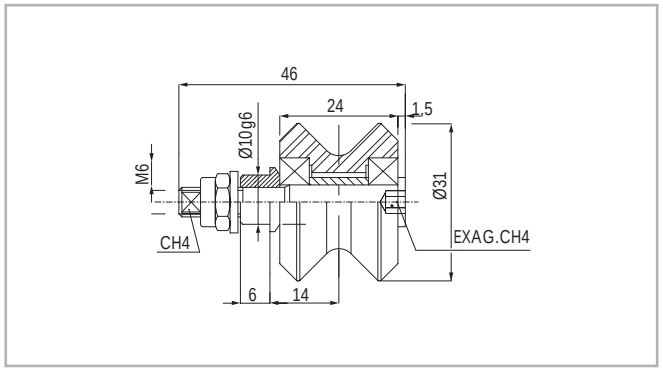

Fig. 17

ROL-C031WC-X - Axially constrained concentric roller
ROL-E031WC-B - Axially constrained eccentric roller (ecc. max. 1.4 mm)
Max radial load 270 N - max axial load 100 N

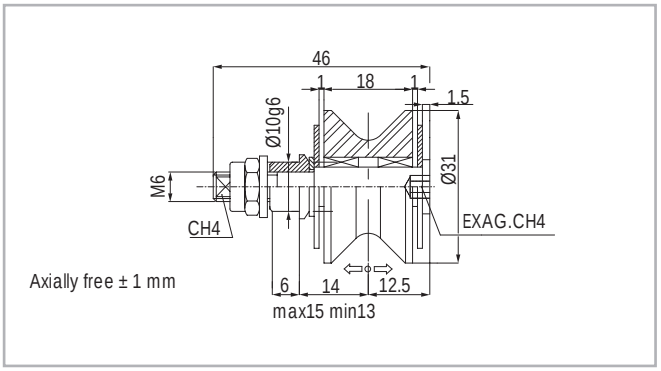

Fig. 18

ROL-C031VC-XA - Axially free concentric roller
ROL-E031VC-BA - Axially free eccentric roller (ecc. max. 1.4 mm)
Max radial load 270 N - it doesn't accept axial load

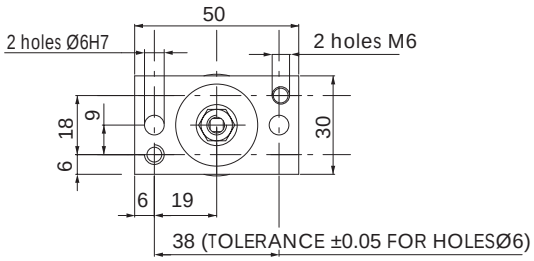

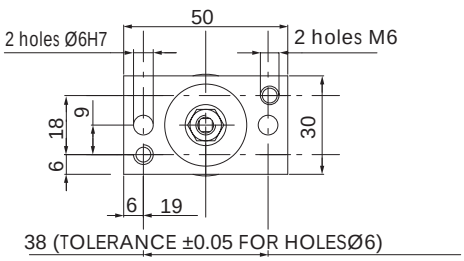

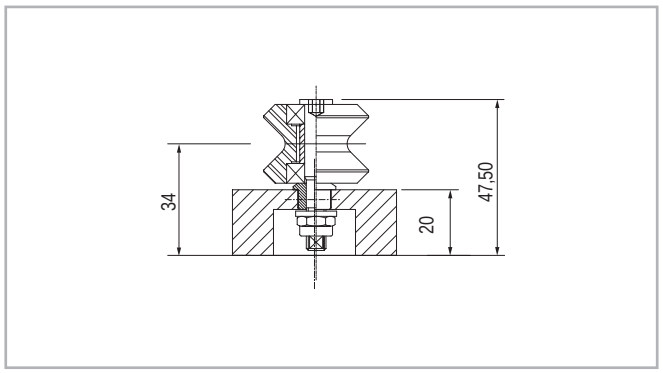

Fig. 19

55.1062 - Roller assembly with one conc. roller
55.1067 - Roller assembly with one ecc. roller
Max. Load per roller: radial 270 N / axial 100 N

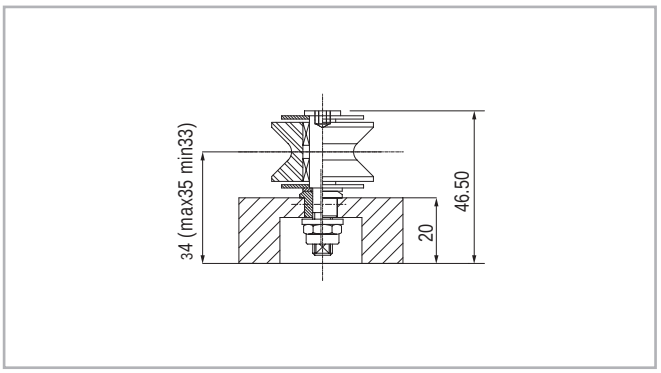

Fig. 20

55.1066 - Roller assembly with one conc. axial free roller
55.1065 - Roller assembly with one ecc. axial free roller
Max. Load per roller: radial 270 N
No axial loading

Roller boxes for "Speedy Rail C 48" guide

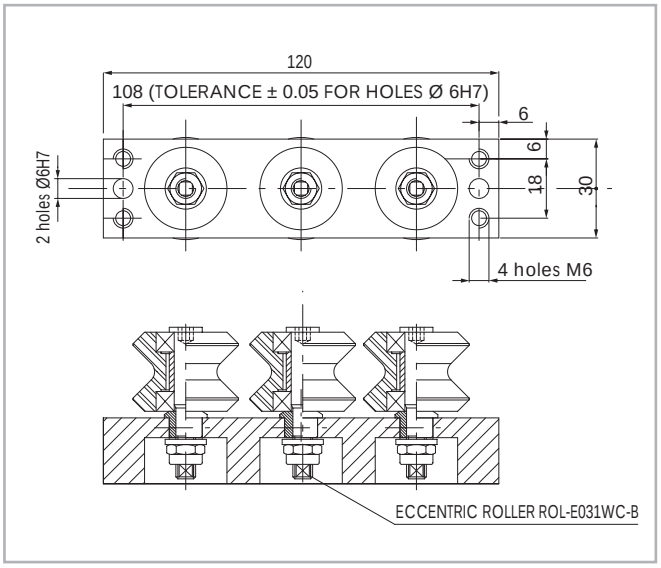

Fig. 21

55.1060 - Roller assembly with two concentric rollers and one eccentric roller
Max. load per roller: radial 270 N / axial 100 N

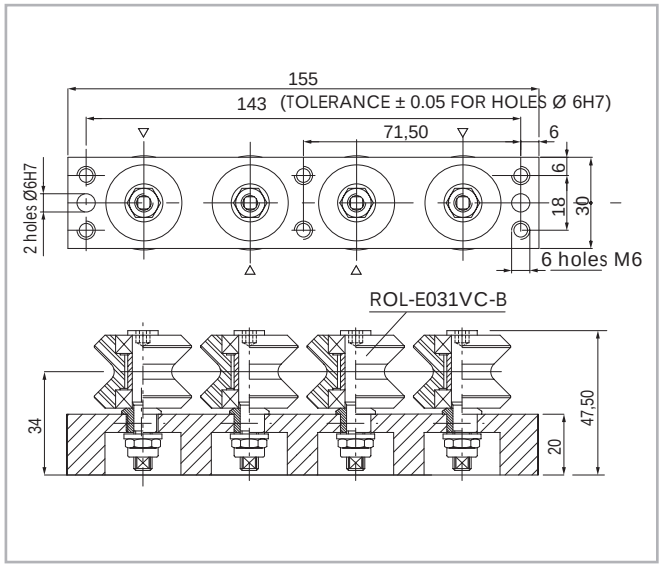

Fig. 22

55.1064 - Roller assembly with 4 rollers, 3 conc. and 1 ecc.
Max. load per roller: radial 270 N / axial 100 N

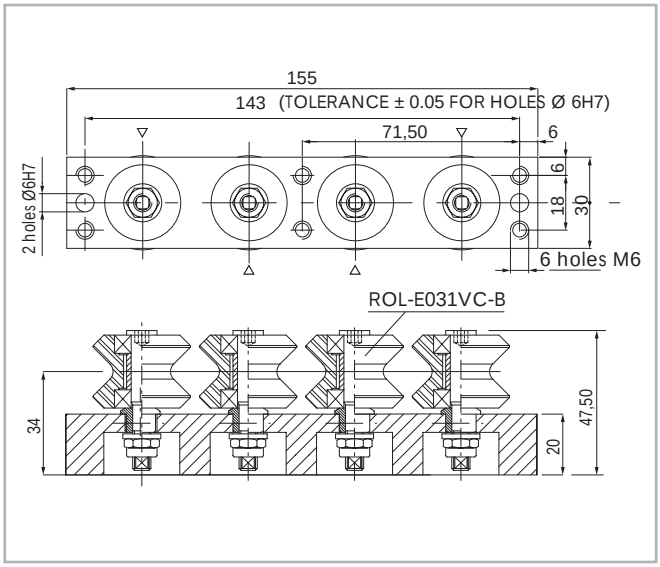

Fig. 23

55.1069 - Roller assembly with 4 rollers, 2 conc. and 2 ecc.
Max. load per roller: radial 270 N / axial 100 N

On roller assemblies with 3-4 rollers it is possible to have different solutions (axial constrained, axial free, concentric and eccentric rollers).

Speedy Rail 60

"Speedy Rail Mini" guide and specification

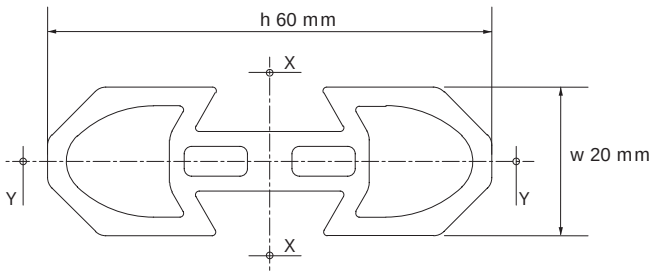

Fig. 24

Surface quadratic moments: X-X axis = 138.600 mm4 / Y-Y axis = 18.000 mm4.

Max. manufacturing tolerances = ±0.15 mm across opposite rolling surfaces.

Max. angular distorsion = ±20'/m.

Linear mass = 1.27 Kg/m.

Max. linear distorsion = ±0.4 mm/m.

Standard lengths: 1000-1500-2000-2500-3000-3500-4000-4500-5000-5500-6000-6500-7000 mm.

Ext. surface: deep hard anodizing

"Speedy Rail Mini" roller assemblies and components

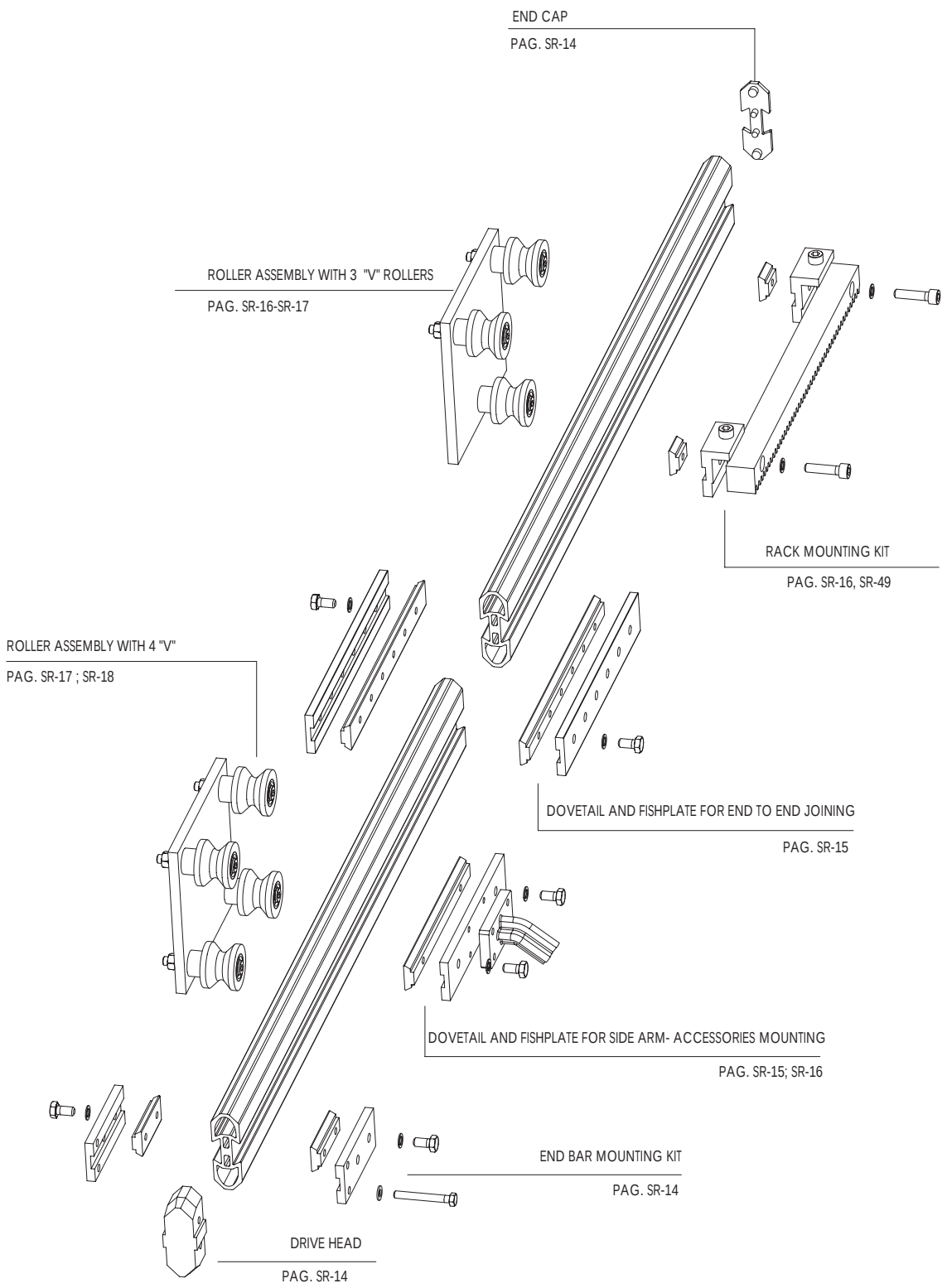

Fig. 25

"Speedy Rail Mini" guide and components

Mini speedy rail with plain ends

SR060 - T

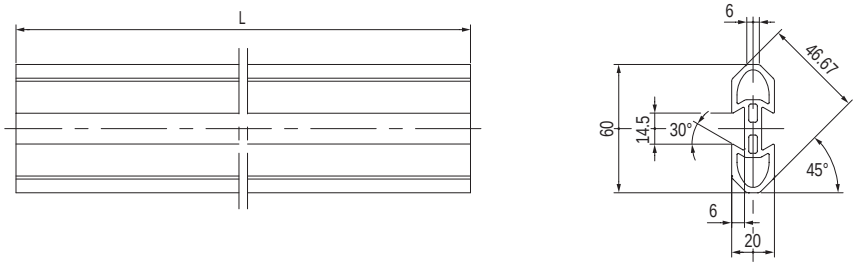

Fig. 26

Mini speedy rail with drilled ends

SR060 -F

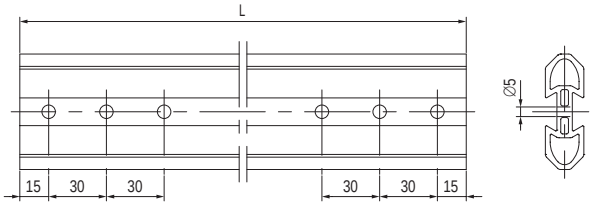

Fig. 27

Nota: drillings on the guide end are required as a safety measure with end-to-end joining in moving rails.

See technical note on page SR-68

Fishplate for drive head

411.0767

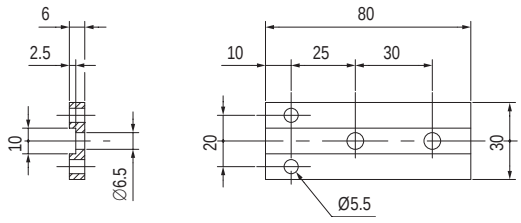

Fig. 28

M6 allen round head screw

411.0775

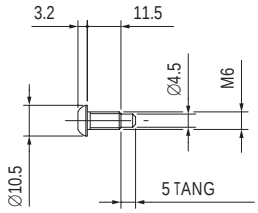

Fig. 29

Drive head

411.0776

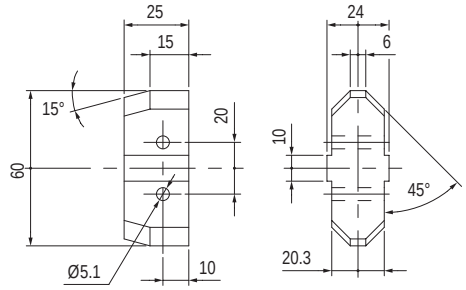

Fig. 30

End cap

411.0739

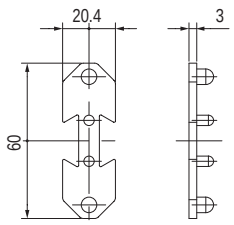

Fig. 31

Bolt for drive head mount

411.0818

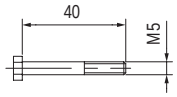

Fig. 32

Dovetail clamps and fishplates

Dovetail clamps

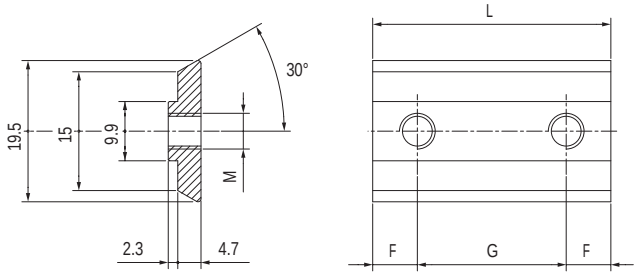

Fig. 33

Code N°	N° Holes	F	G	L	M	Material
411.1732	1	10	/	20	M4	Burnished steel
411.2732	1	10	/	20	M5	
411.2733	9	8	60	496	M5	
411.0732	1	10	/	20	M6	
411.0768	2	15	30	60	M6	
411.0754	3	10	30	80	M6	
411.0769	6	25	30	200	M6	
411.0771	2	25	100	150	M6	
411.0462	2	10	30	50	M6	
411.3532	1	10	/	20	M8	

Tab. 2

Fishplate

411.0463

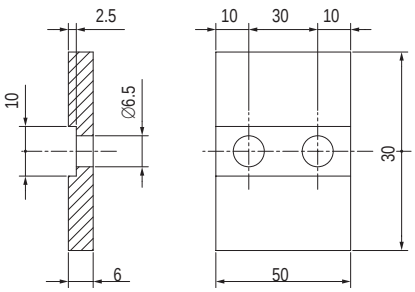

Material: hard anodized aluminium alloy

Fig. 34

Fishplate for end to end joining

411.0772

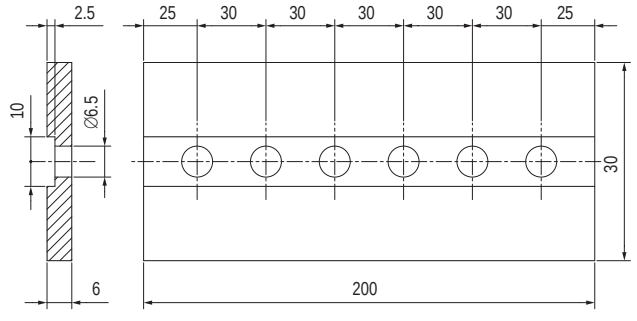

Material: hard anodized aluminium alloy

Fig. 35

Dovetail quick front insertion

411.2736

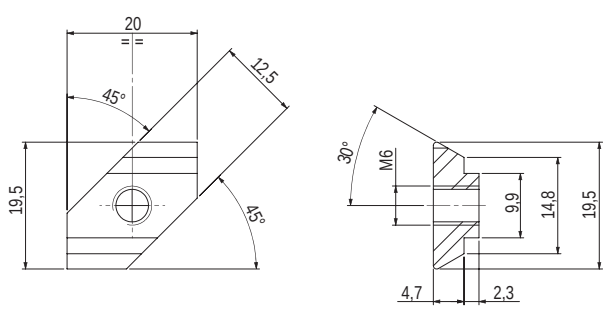

Material: hard anodized aluminium alloy

Fig. 36

Fishplate for side-arm attachment

411.0770

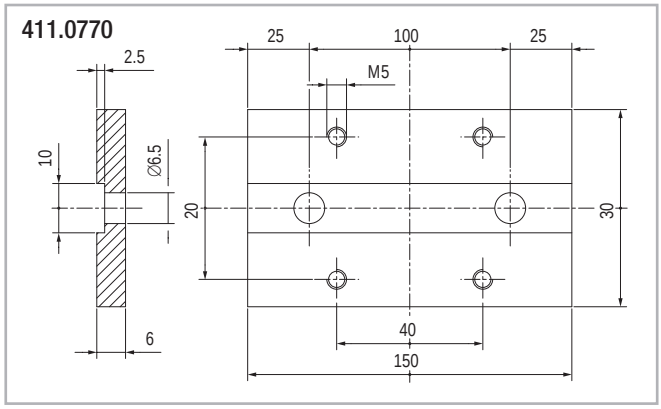

Material: hard anodized aluminium alloy

Fig. 37

Plate for m2 rack mounting

411.1041

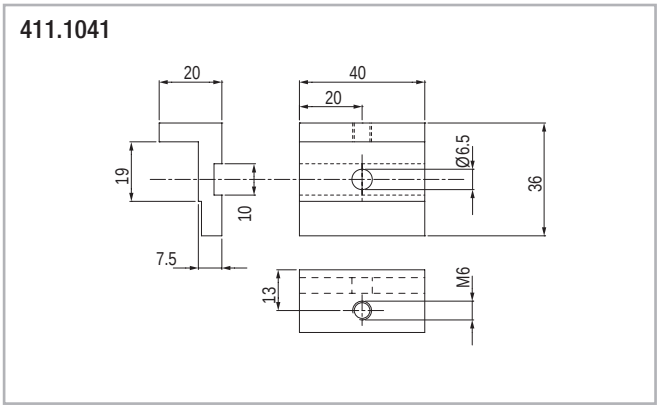

Fig. 38

Roller assembly and "V" rollers "Light"

Plastic compound eccentric roller

ROL-E032VC-B

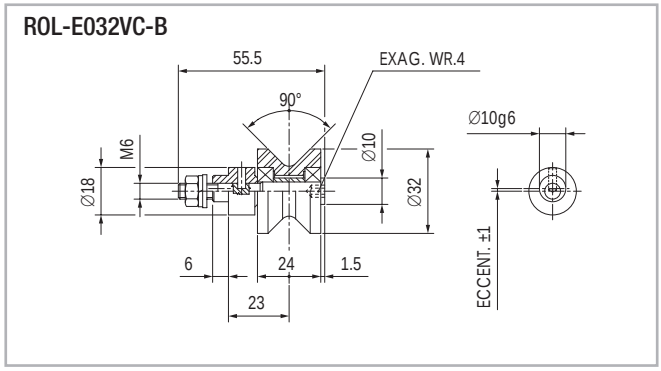

Max. load: radial 270 N axial 100 N

Fig. 39

Plastic compound concentric roller

ROL-C032VC-B

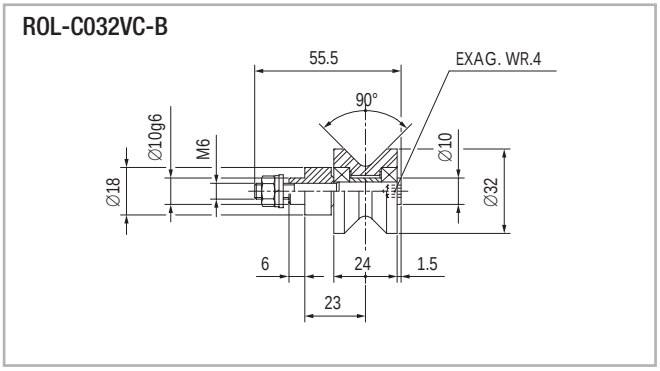

Max. load: radial 270 N axial 100 N

Fig. 40

For axially free roller see page SR-10 (55.1072 CONC. - 55.1073 ECC.)

Roller assembly with 3 rollers

55.0372

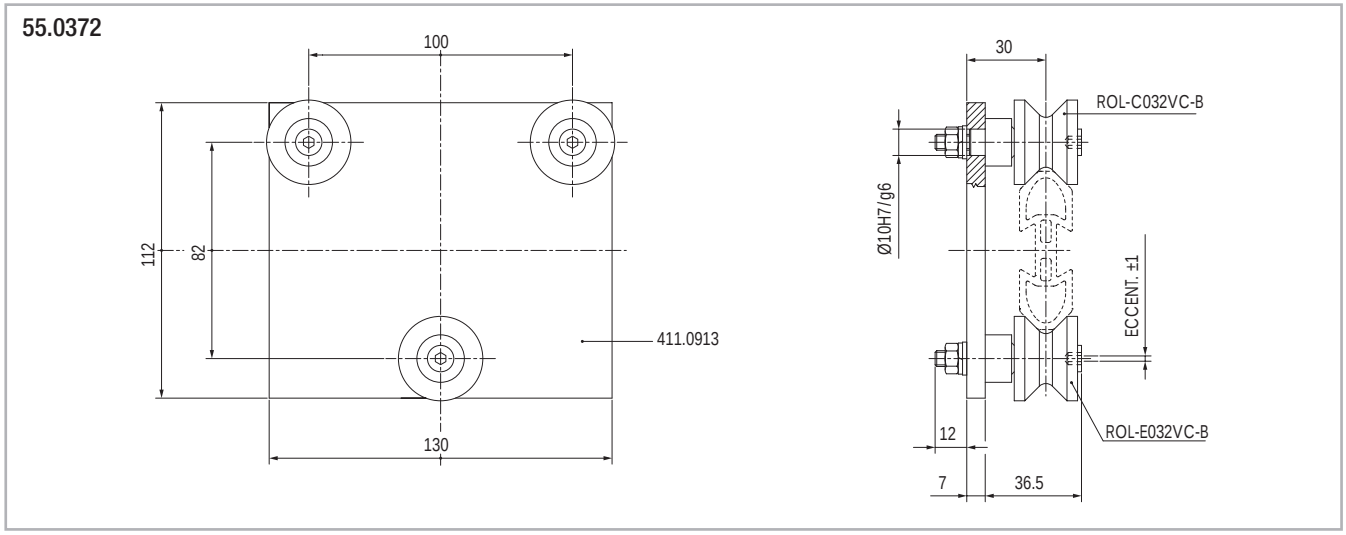

Fig. 41

Roller assembly with 4 rollers

55.0375

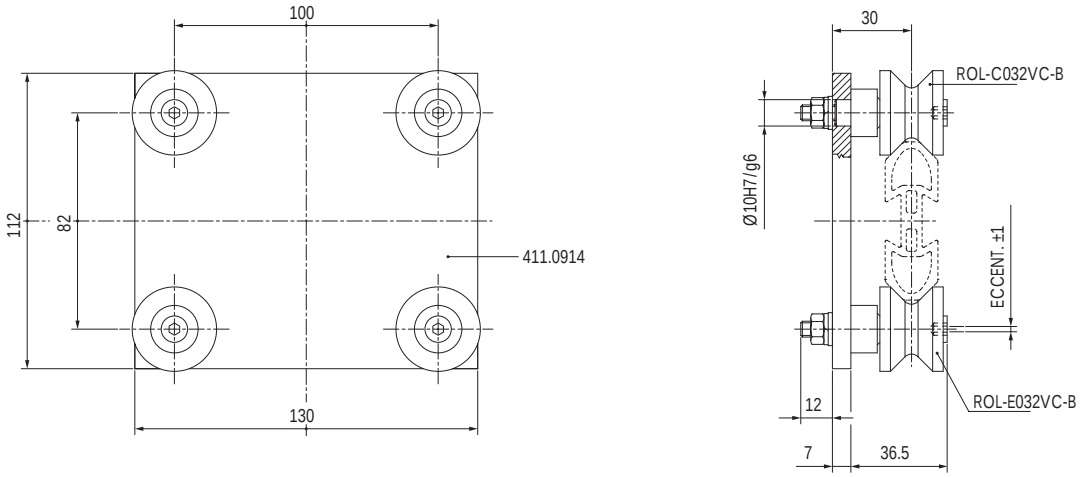

Fig. 42

Roller assemblies and "V" rollers

Plastic compound concentric roller

ROL-C050VC-B

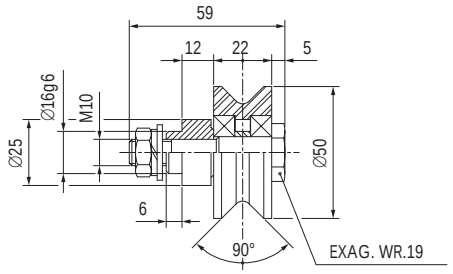

Max. load: radial 400 N axial 100 N

Fig. 43

Plastic compound eccentric roller

ROL-E050VC-B

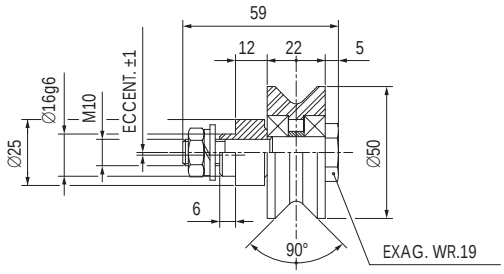

Max. load: radial 400 N axial 100 N

Fig. 44

Roller assembly with 3 rollers

55.0605

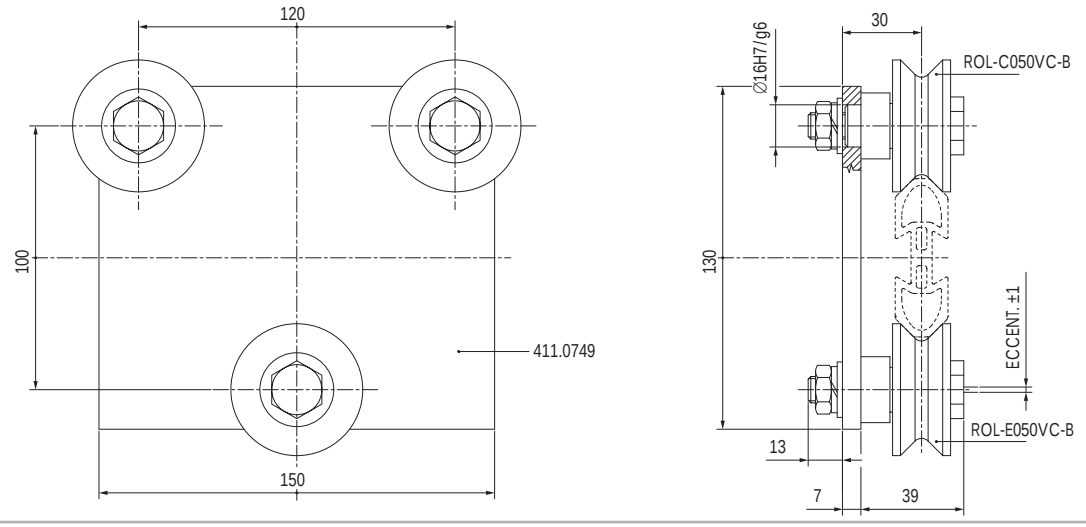

Fig. 45

Roller assembly with 4 rollers

55.0606

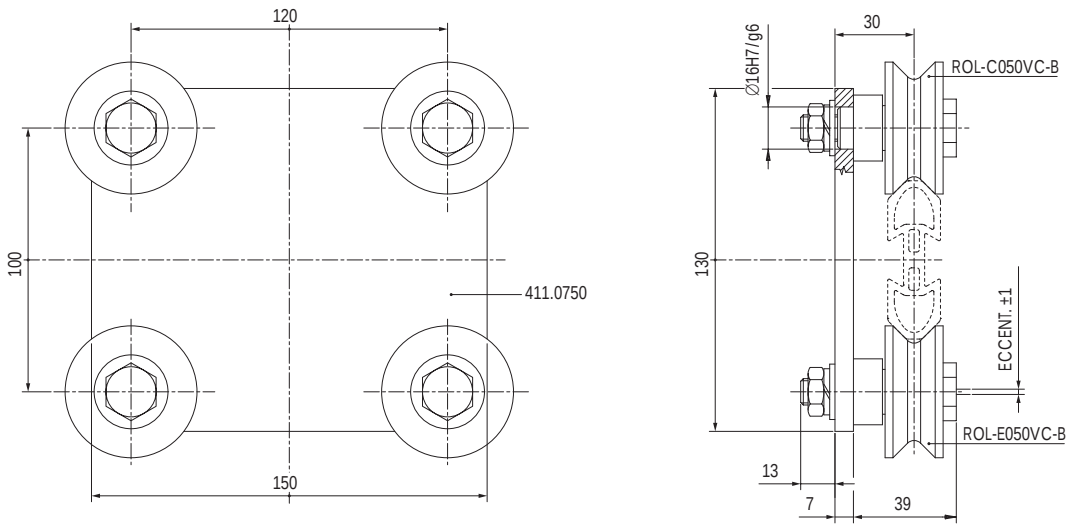

Fig. 46

Speedy Rail 90

"Middle Speedy Rail" guide and specifications

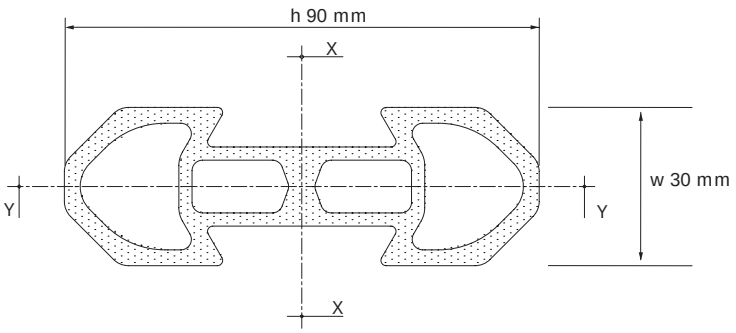

Fig. 47

Surface quadratic moments: X-X axis = 630.000 mm4 / Y-Y axis = 76.500 mm4.

Max. manufacturing tolerances = ±0.20 mm across opposite rolling surfaces.

Max. angular distorsion = ±20'/m.

Linear mass = 2.6 Kg/m.

Max. linear distorsion = ±0.4 mm/m.

Standard lengths: 1000-1500-2000-2500-3000-3500-4000-4500-5000-5500-6000-6500-7000-7500 mm.

External surface: deep hard anodizing

"Middle Speedy Rail" assemblies and components

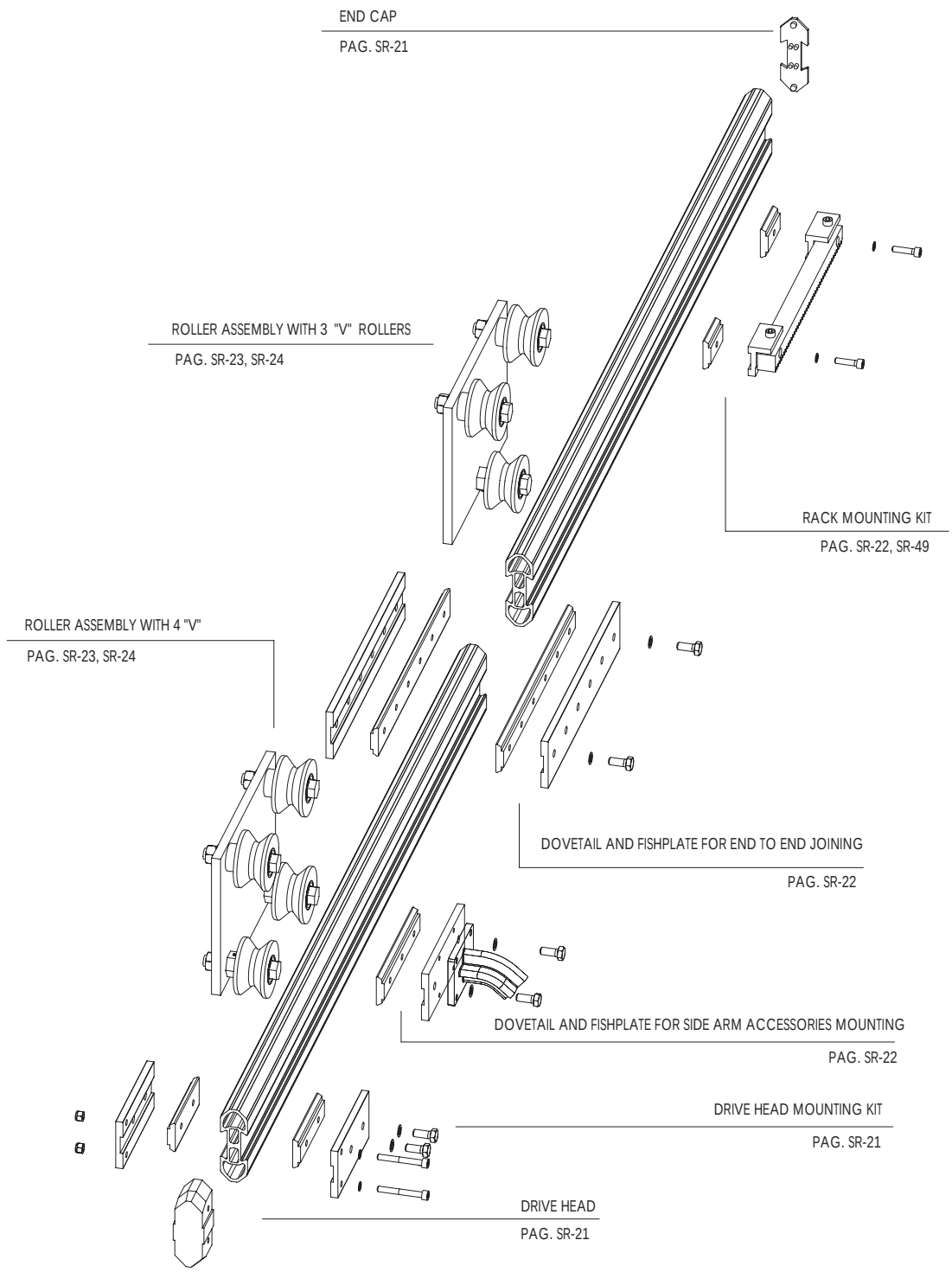

Fig. 48

"Middle Speedy Rail" guide and components

Middle Speedy Rail with plain ends

SR090 -T

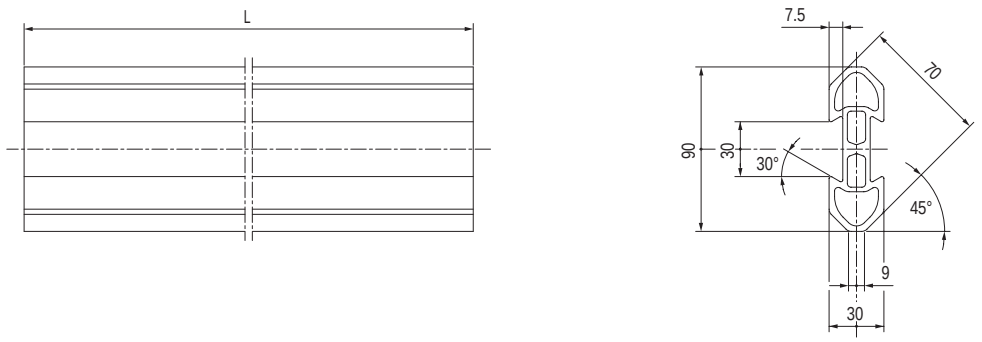

Fig. 49

Middle Speedy Rail with drilled ends

SR090 - F

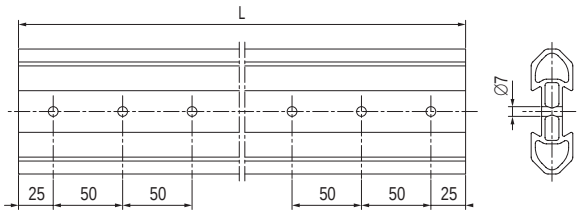

Fig. 50

Note: drillings on the guide end are required as a safety measure with end-to-end joining in moving rails.

Fishplate for drive head

411.0866

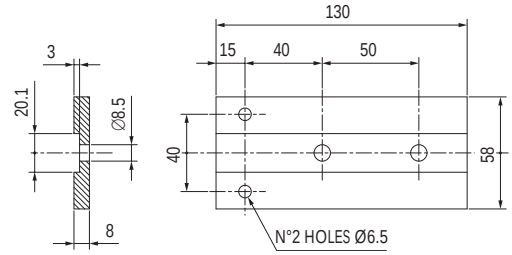

Fig. 51

Drive head

411.0856

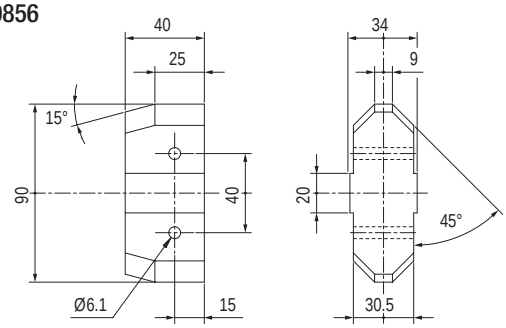

Fig. 52

End cap

411.0858

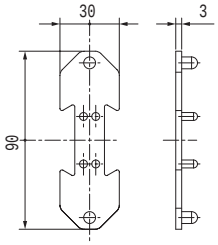

Fig. 53

Bolt for drive head mount

411.0610

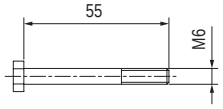

Fig. 54

Dovetail clamps and fishplates

Dovetail Clamp

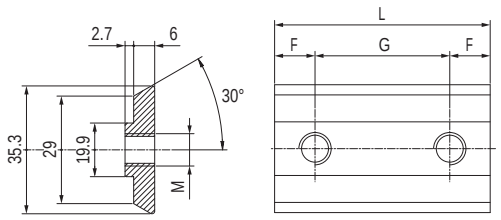

Fig. 55

Code N.	N° Holes	F	G	L	M	Material
411.1025	1	25	/	50	M4	Burnished steel
411.1047	1	25	/	50	M6	
411.1045	1	25	/	50	M8	
411.1069	2	25	50	100	M8	
411.1088	3	25	50	150	M8	
411.1072	4	25	50	200	M8	
411.1070	6	25	50	300	M8	

Tab. 3

Dovetail-execution without step

411.1046

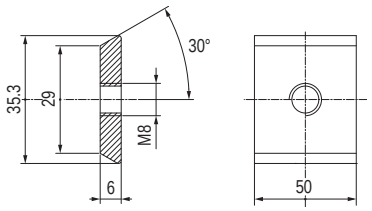

Fig. 56

Dovetail-quick front insertion version

411.0855

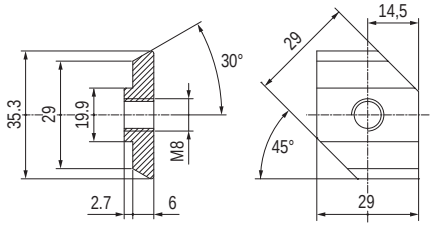

Fig. 57

Fishplate for end to end joining

411.0872

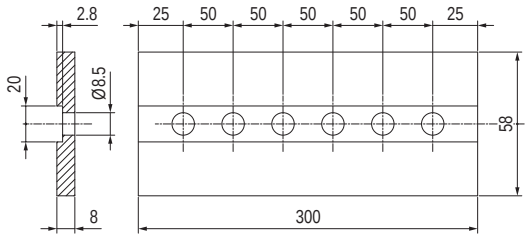

Material: hard anodized aluminium alloy

Fig. 58

Fishplate for side-arm attachment

411.1124

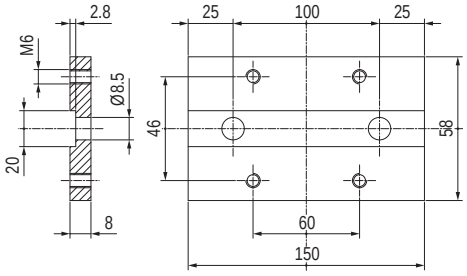

Material: hard anodized aluminium alloy

Fig. 59

Steel plate for m2 rack mounting

411.1226

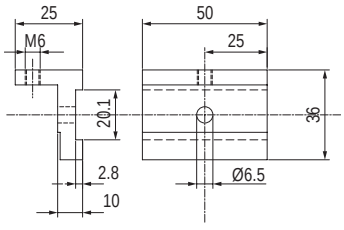

Fig. 60

Plastic compound shell "V" rollers

Concentric roller

ROL-C062VC-B

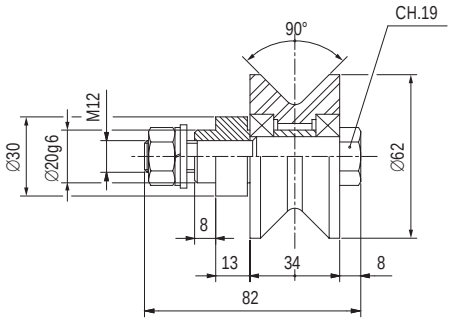

Max. load: radial 450 N/axial 150 N

Fig. 61

Ecccentric roller

ROL-E062VC-B

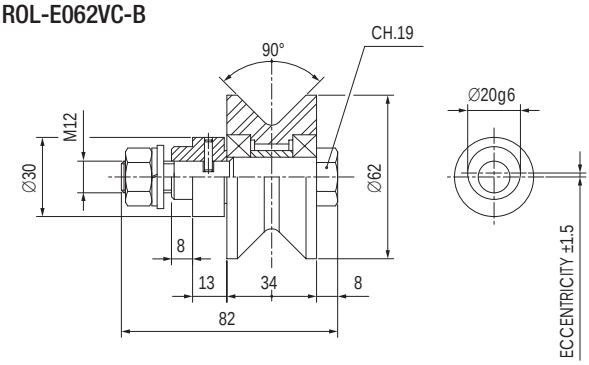

Max. load: radial 450 N/axial 150 N

Fig. 62

Concentric roller heavy duty

ROL-C062VC-BH

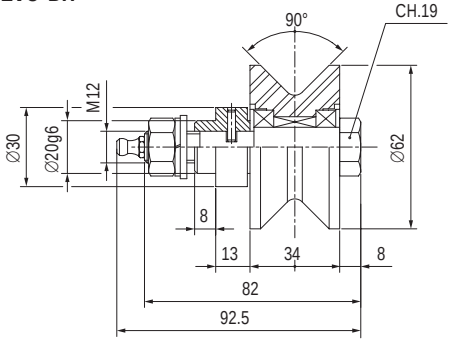

Max. Load: radial 700 N/axial 280 N - Optional lifetime lubrication

Fig. 63

Ecccentric roller heavy duty

ROL-E062VC-BR

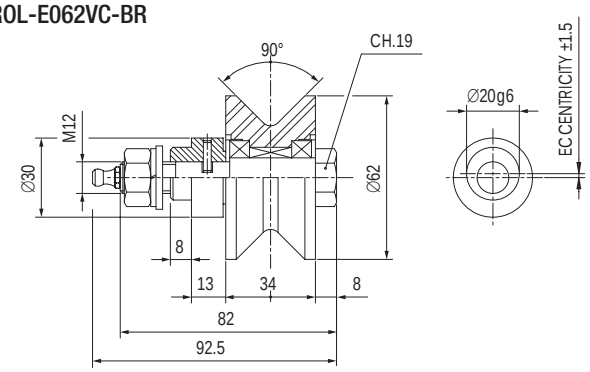

Max. Load: radial 700 N/axial 280 N - Optional lifetime lubrication

Fig. 64

Concentric roller axially free ±1.75 mm

ROL-C062VC-BA

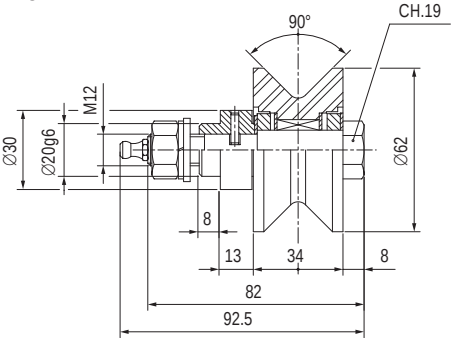

Max. radial load: 700 N - Optional lifetime lubrication

Fig. 65

Eccentric roller axially free ±1.75 mm

ROL-E062VC-BA

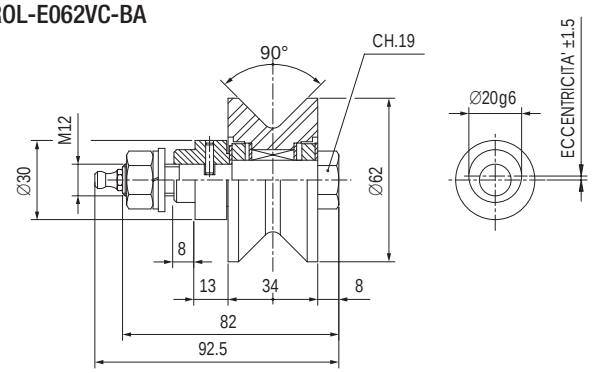

Max. radial load: 700 N - Optional lifetime lubrication

Fig. 66

Roller assembly with "V" shaped rollers

Roller assembly with 4 rollers

55.0666

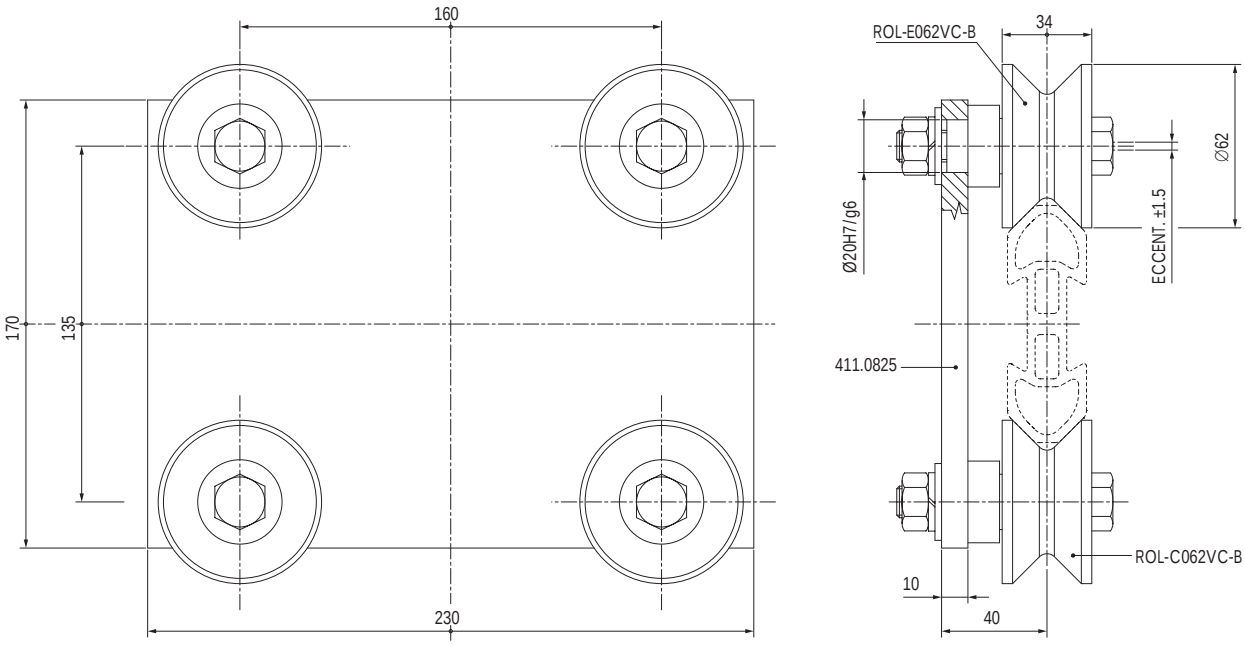

Fig. 67

Roller assembly with 3 rollers

55.0665

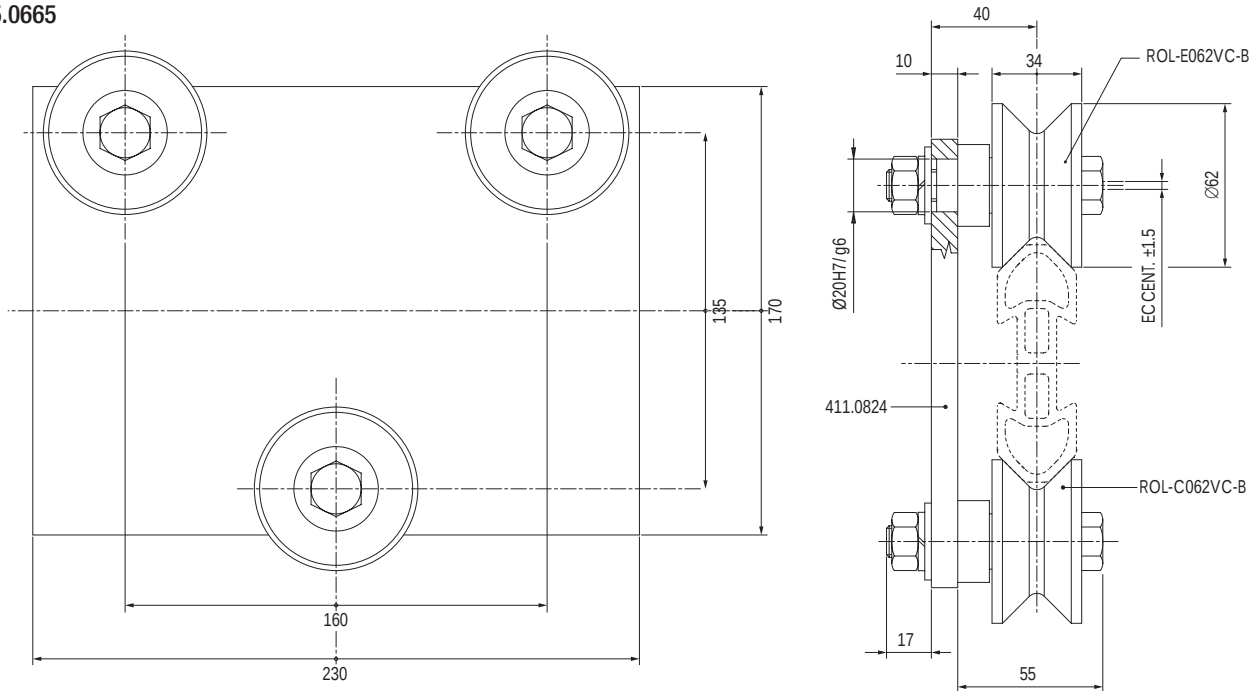

Fig. 68

The plates - cod. 411.0825 and 411.0824 - are made in aluminium alloy with hard anodization. The rollers cod. 55.0760 4 rollers ROL-C062VC-BH + ROL-E062VC-BR and 55.0759 3 rollers ROL-C062VC-BH + ROL-E062VC-BR and/or different combinations from the ones shown on this page can be mounted on the above plates. Please call our technical dept. Prior any configuration changes.

Speedy Rail 120

"Standard Speedy Rail" guide and specifications

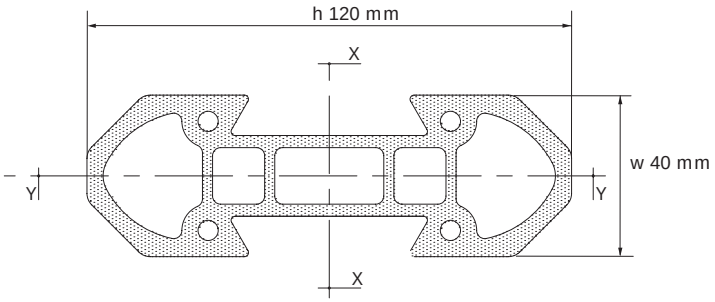

Fig. 69

Surface quadratic moments: X-X axis = 2.138.988 mm4 / Y-Y axis = 259.785 mm4.

Max. manufacturing tolerances = ±0.20 mm across opposite rolling surfaces.

Max. angular distorsion = ±20'/m.

Linear mass = 4.4 Kg/m.

Max. linear distorsion = ±0.5 mm/m.

Standard lengths: 1000-1500-2000-2500-3000-3500-4000-4500-5000-5500-6000-6500-7000-7500 mm.

External surface: deep hard anodizing

"Standard Speedy Rail" assemblies and components

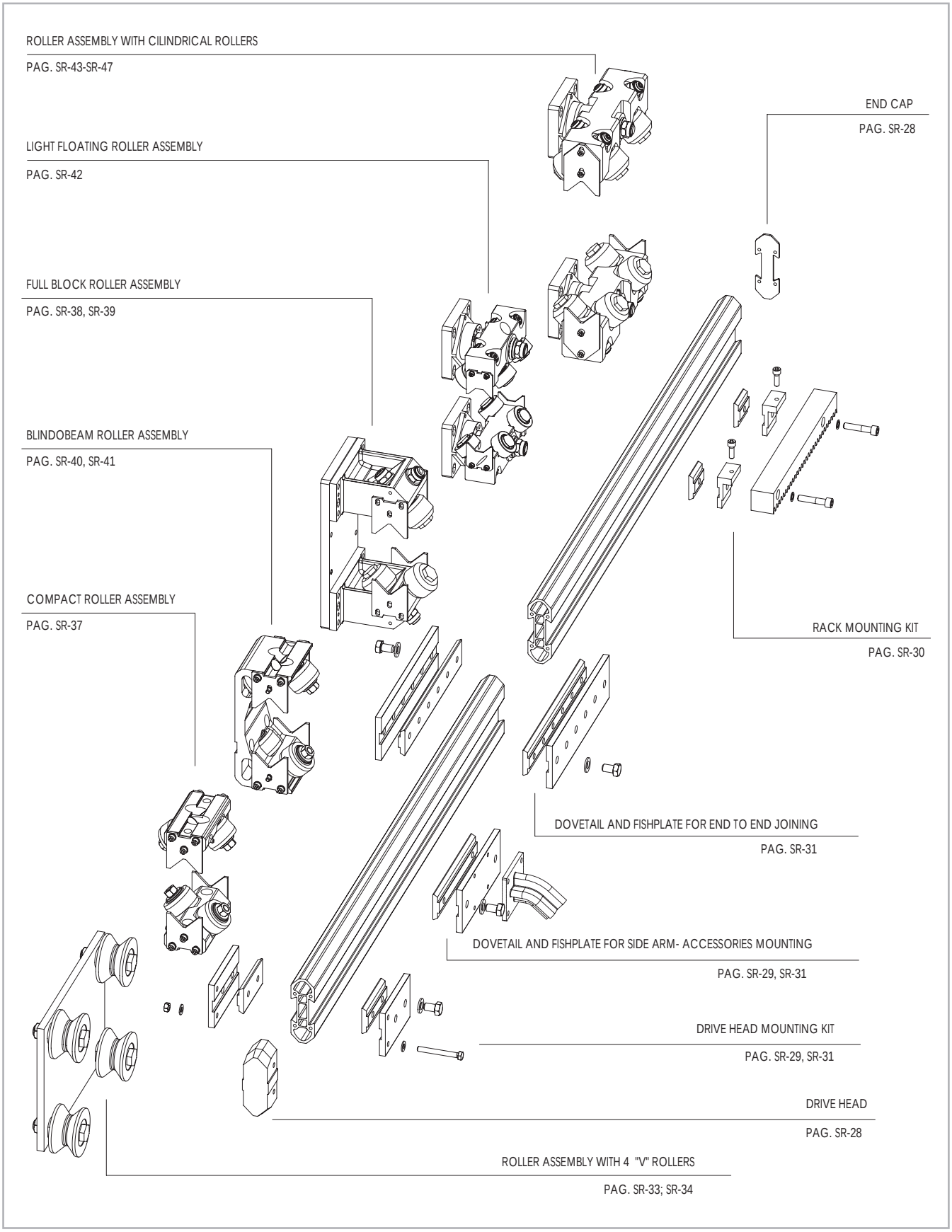

Fig. 70

"Standard Speedy Rail" guide and specifications

Standard Speedy Rail with plain ends

SR120 -T

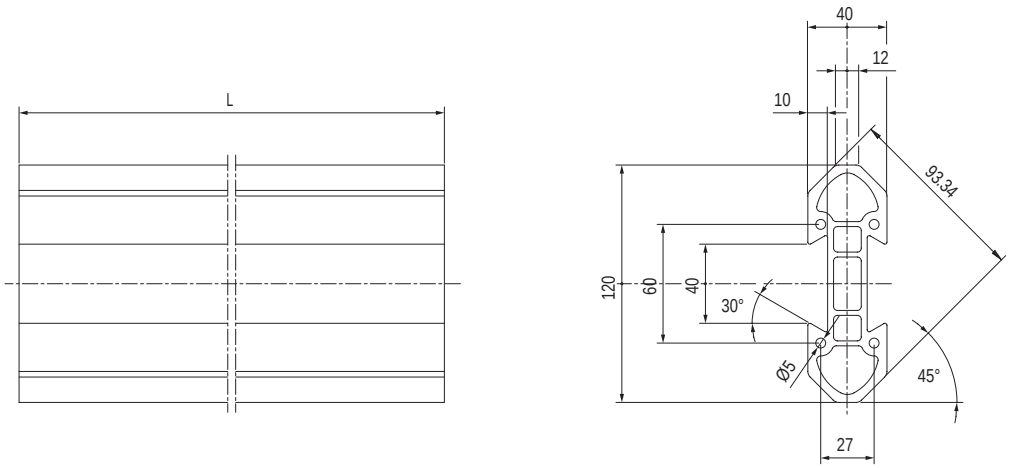

Fig. 71

Standard Speedy Rail with drilled ends

SR120 - F

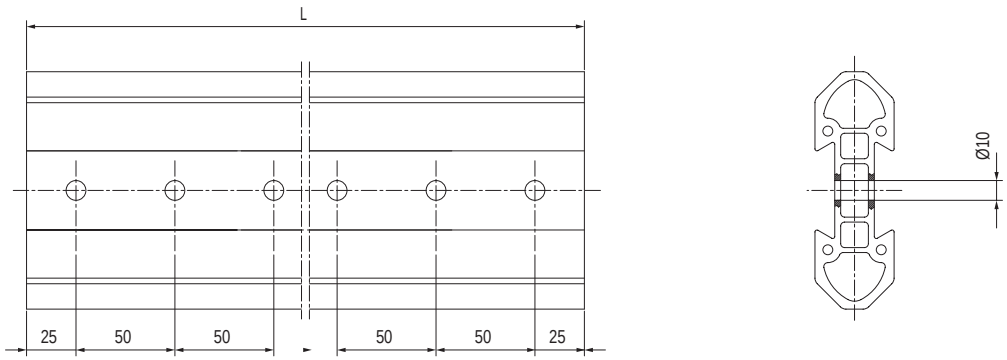

Fig. 72

Note: drillings on guide end are required as a safety measure with end-to-end joining in moving rails.

Components for speedy rail SR120 guide

Drive head

411.0476

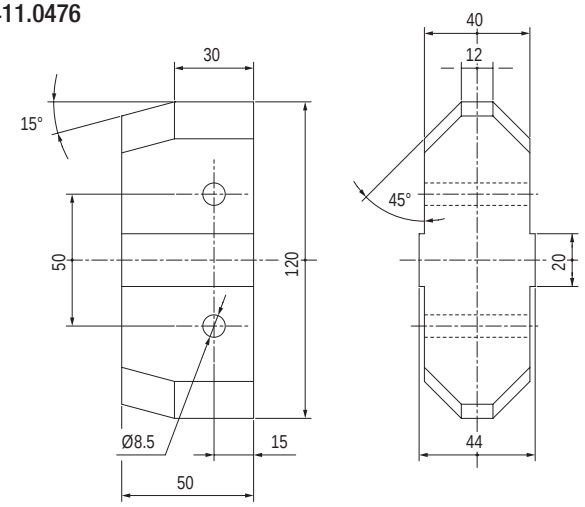

Fig. 73

Bolt for drive head

411.0617

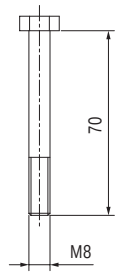

Fig. 74

Alluminium alloy end cap

411.1740

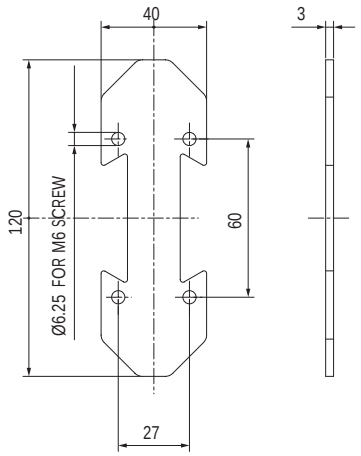

Fig. 75

Standard dovetail clamps

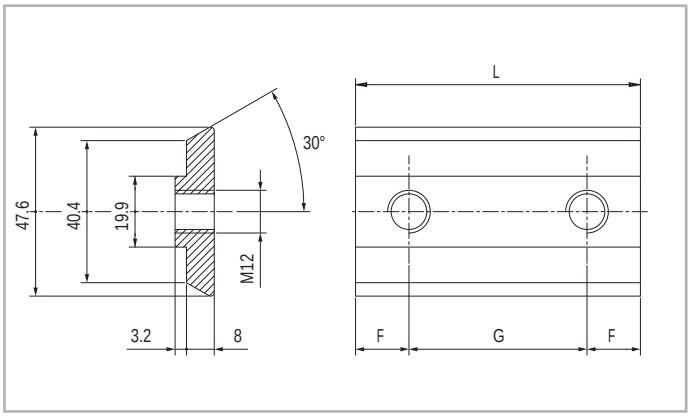

Fig. 76

Code N.	N° Holes	F	G	L	Material
411.0745	1	25	/	50	Burnished steel
411.0503	2	15	40	70	
411.0469	2	25	50	100	
411.0588	3	25	50	150	
411.0472	2	25	150	200	
411.0470	6	25	50	300	

Tab. 4

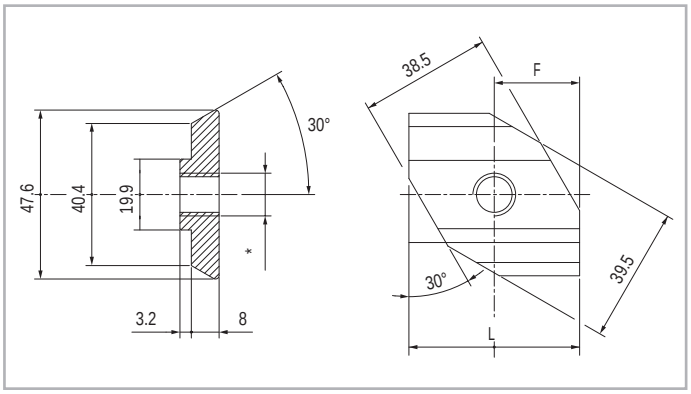

Fig. 77

411.1178
* M10 dovetail-quick front-insertion version

411.0845
* M12 dovetail-quick front-insertion version

Dovetail clamps with M8 threaded holes

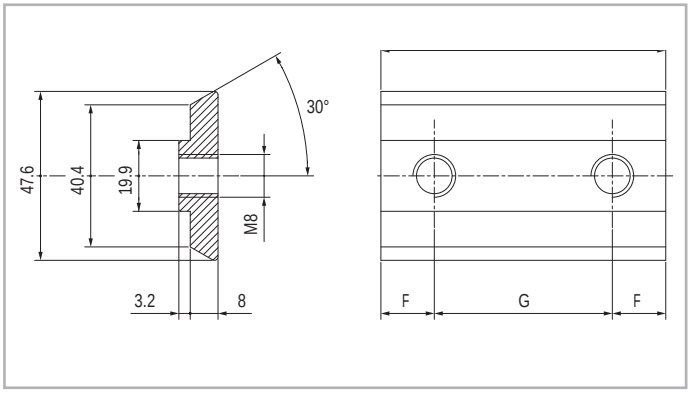

Fig. 78

Code N.	N° Holes	F	G	L	Material
411.0675	2	15	20	50	Burnished steel
411.1111	1	25	/	50	
411.1112	2	25	50	100	
411.1113	3	25	50	150	
411.0970	6	25	50	300	

Tab. 5

Dovetail clamps with M10 threaded holes

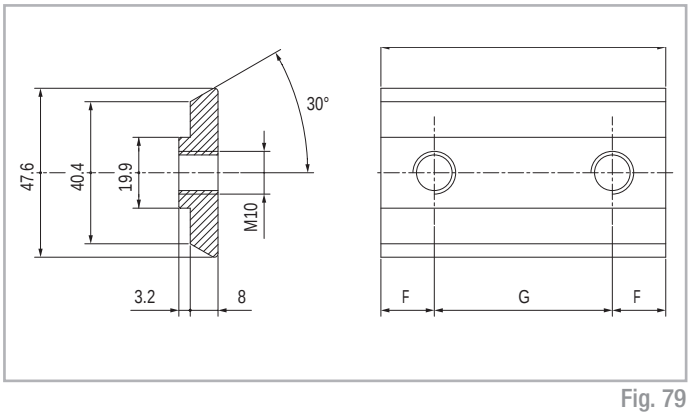

Fig. 79

Code N.	N° Holes	F	G	L	Material
411.1117	1	25	/	50	Burnished steel
411.1119	2	25	50	100	
411.1120	3	25	50	150	

Tab. 6

Steel dovetail without step

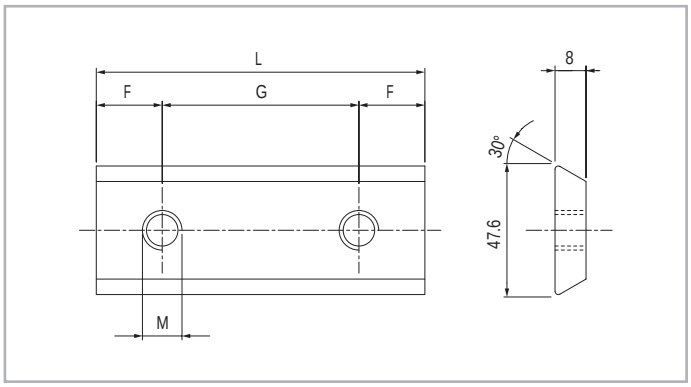

Fig. 80

Code N.	N° Holes	F	G	L	M	Material
411.1675	2	15	20	50	M8	Burnished steel
411.1186	1	25	/	50	M10	
411.1185	1	25	/	50	M12	
411.0888	3	25	50	150	M12	

Tab. 7

Steel dovetail quick front insertion without step

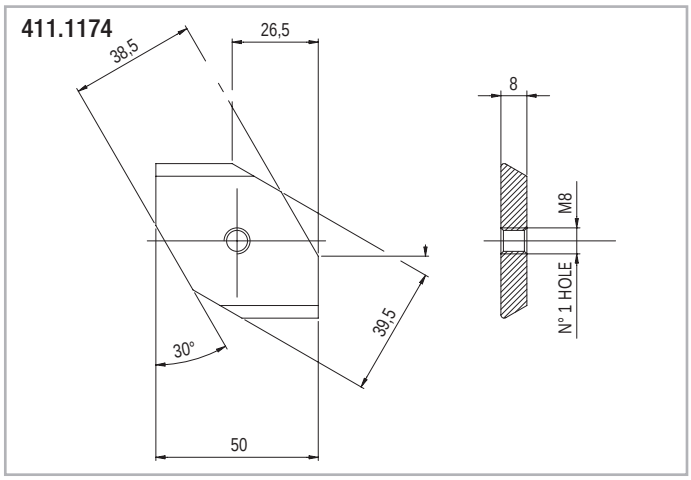

Fig. 81

Racks components for rigid mounting

Fishplate for mod.3-4 rack mounting on dovetail grooves

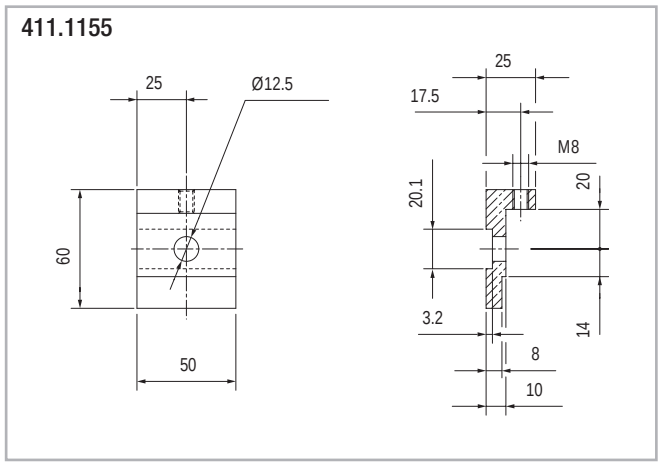

Fig. 82

For rack mounting plate mod.3 Use dovetaile 411.1111

For rack mounting plate mod.4 Use dovetail 411.1117

For standard racks see page SR-49; For dovetail see page SR-29, SR-30; For insert see page SR-53

Standard fixing fishplates

Side attachment fishplate suitable for: speedy rail standard, wide body, super wide body

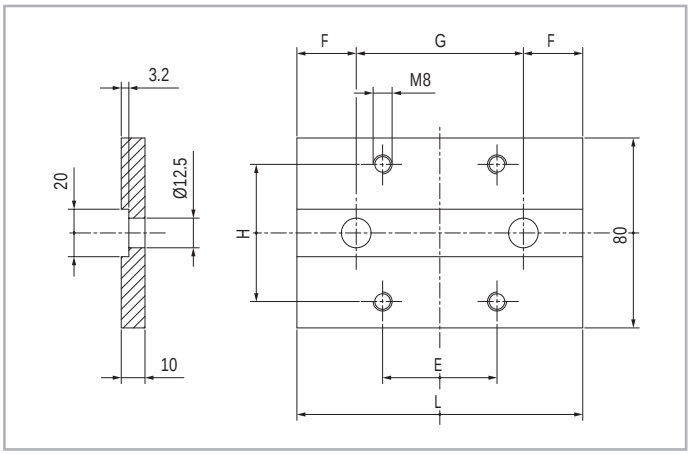

Fig. 83

Code N.	E	F	G	H	L	Material
411.0570	70	25	150	60	200	Hard anodized aluminium alloy

Tab. 8

Fishplates for end to end joining suitable for speedy rail standard, wide body, super wide body

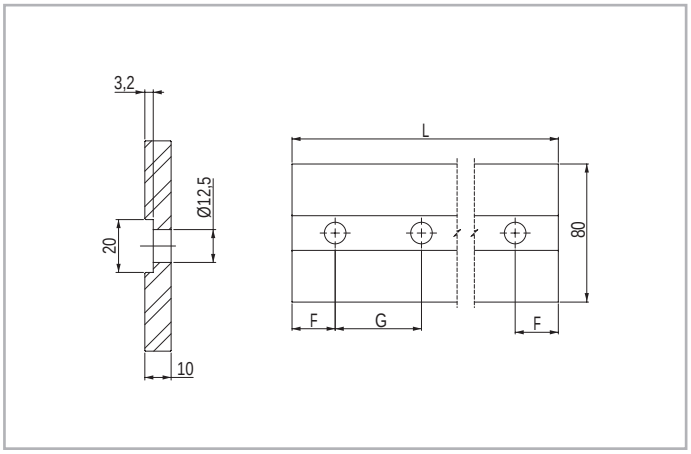

Fig. 84

Code N.	N° Holes	L	F	G	Material
411.0572	6	300	25	50	Hard anodized aluminium alloy
411.0690	6	300	25	50	Burnished steel
411.0573	6	300	25	50	Steel/countersuk holes

Tab. 9

Fishplate for drive head

411.0567

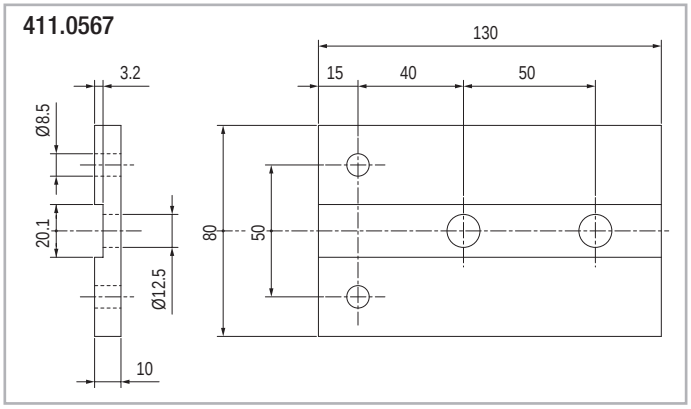

Fig. 85

M12 exag. head screw

411.0475

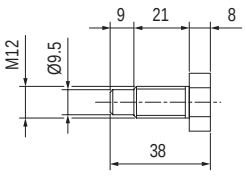

Fig. 86

Plastic compound shell "V" rollers

Concentric roller

ROL-C080VC-B

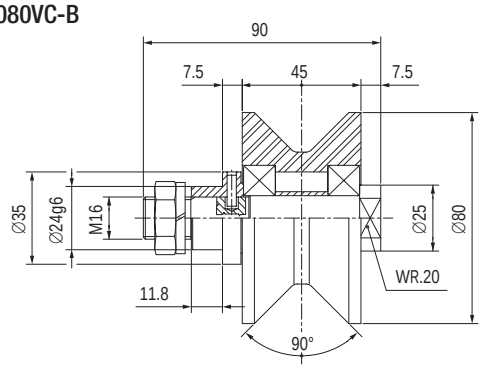

Radial load 700 N max. axial load 200 N max. - lifetime lubrication Fig. 87

Eccentric roller

ROL-E080VC-B

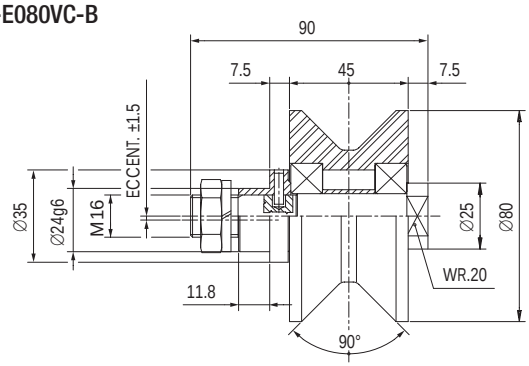

Radial load 700 N max. axial load 200 N max. - lifetime lubrication Fig. 88

High stiffness concentric roller

ROL-C080VC-BR

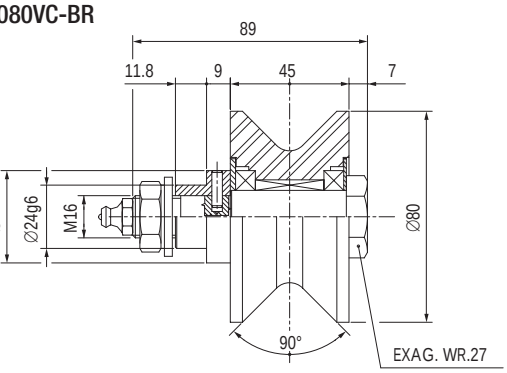

Radial load 1000 N max. axial load 400 N max. - Optional lifetime lubrication (end play 0.010/0.030 mm) Fig. 89

High stiffness eccentric roller

ROL-E080VC-BR

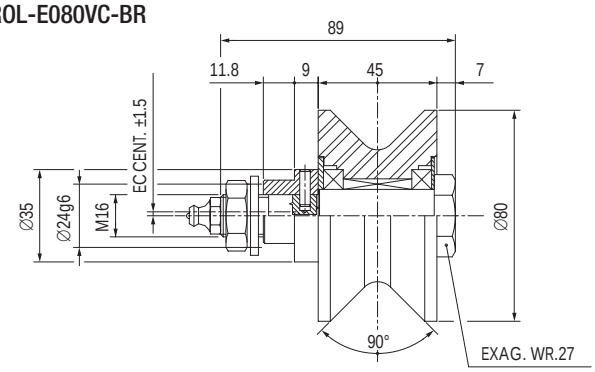

Radial load 1000 N max. axial load 400 N max. - Optional lifetime lubrication (end play 0.010/0.030 mm) Fig. 90

Concentric roller - axially free: ±1.9 mm

ROL-C080VC-BVA

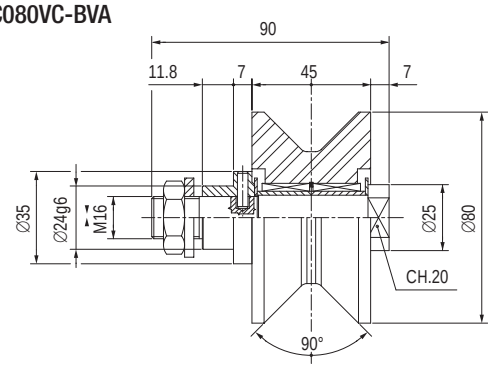

Radial load: 1000 N max. - lifetime lubrication Fig. 91

Eccentric roller - axially free: ±1.9 mm

ROL-E080VC-BVA

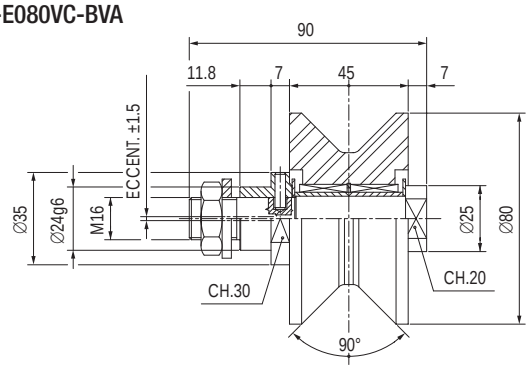

Radial load: 1000 N max. - lifetime lubrication Fig. 92

Heavy duty concentric 'V' roller

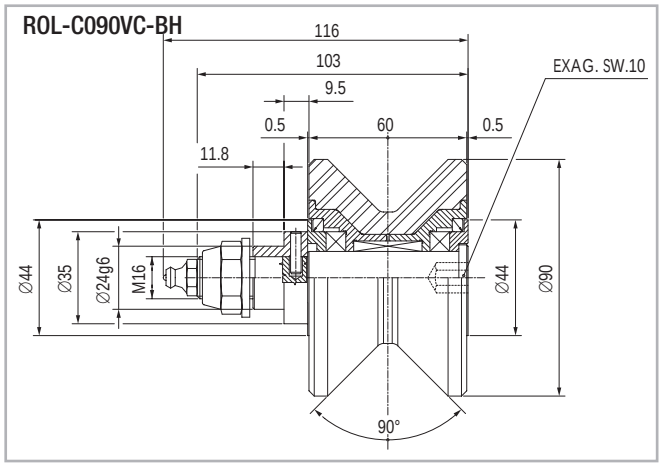

Max. load: radial 1150 N axial 650 N

Fig. 93

Heavy duty eccentric 'V' roller

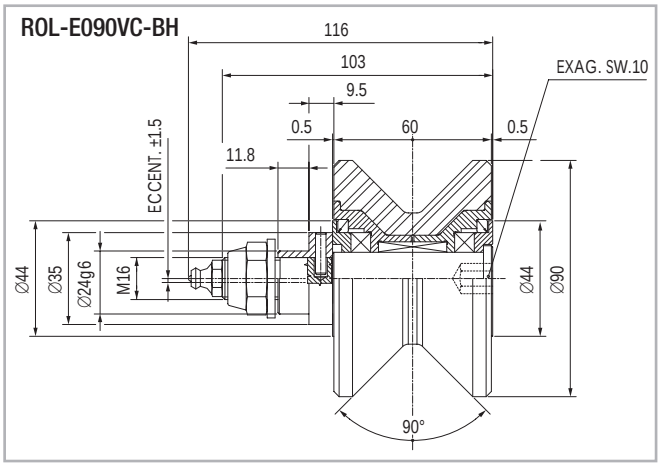

Max. load: radial 1150 N axial 650 N

Fig. 94

Heavy duty concentric 'V' roller - axially free: ±1.5 mm

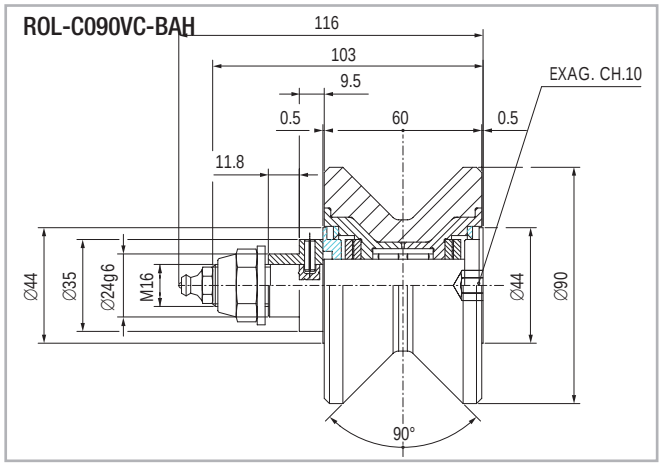

Radial load: 1150 N max.

Fig. 95

Heavy duty eccentric 'V' roller - axially free: ±1.5 mm

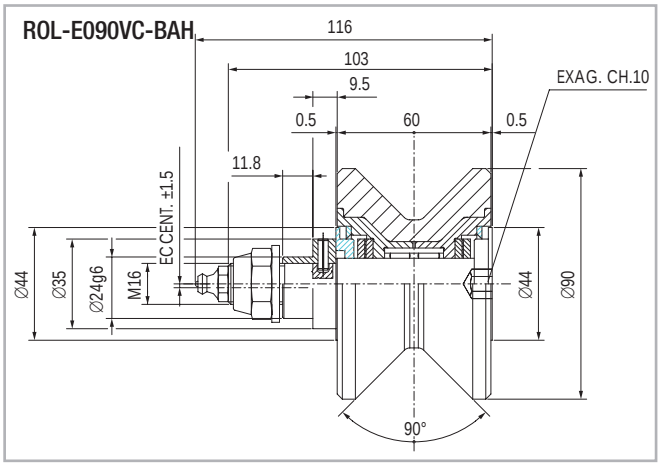

Radial load: 1150 N max.

Fig. 96

Protected concentric 'V' roller for heavy duties

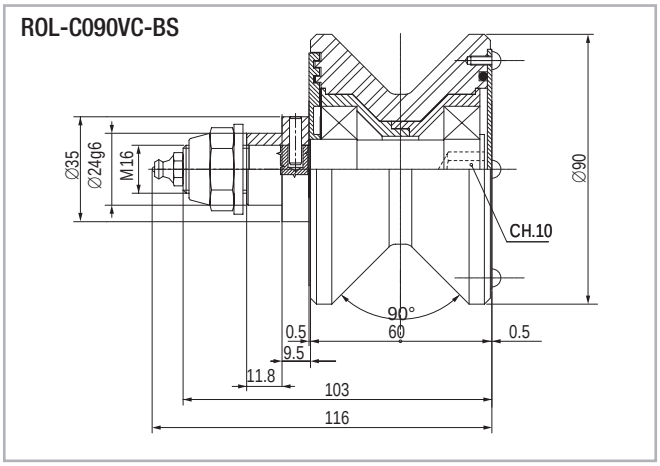

Max. load: radial 1150 N axial 650 N - Optional lifetime lubrication

Fig. 97

Protected eccentric 'V' roller for heavy duties

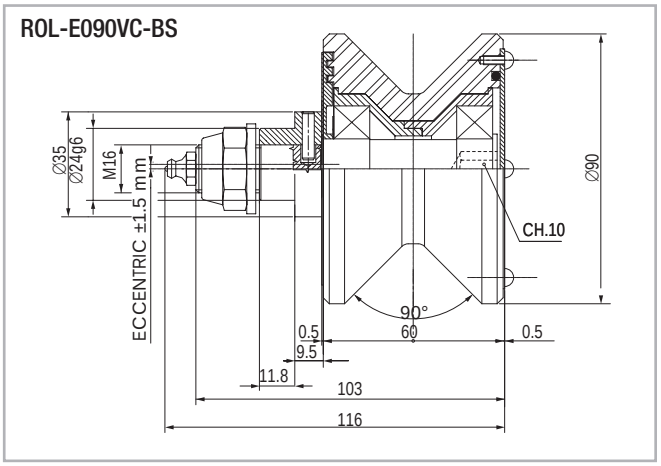

Max. load: radial 1150 N axial 650 N - Optional lifetime lubrication

Fig. 98

Wheelbase for all 'V' shaped rollers on Speedy Rail:

Wheelbase beetwen roller centers for SR250 = 302,2 mm

Wheelbase beetwen roller centers for SR180 = 232,2 mm

Wheelbase beetwen roller centers for SR120 = 176.2 mm

Roller assembly with "V" rollers

Light weight roller assembly with 4 rollers

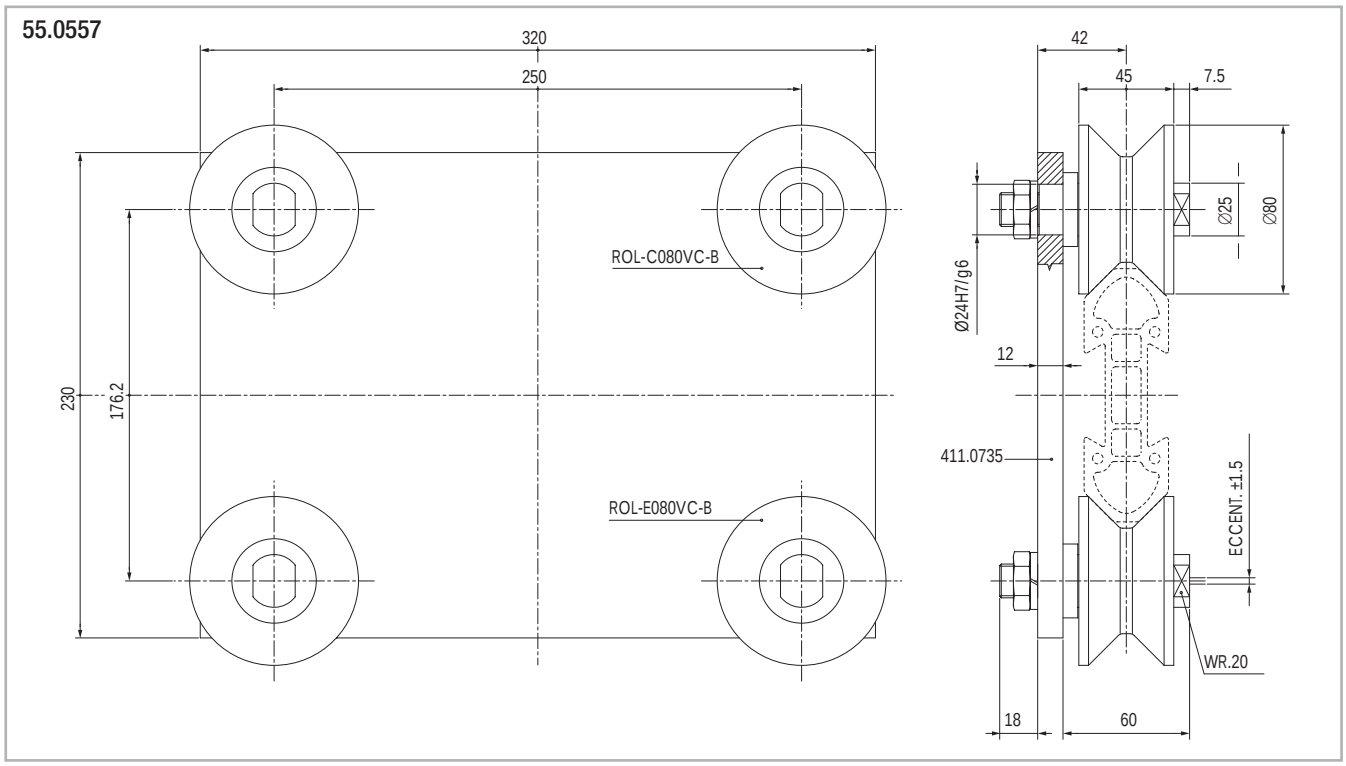

Fig. 99

Roller assembly with 4 high stiffness rollers

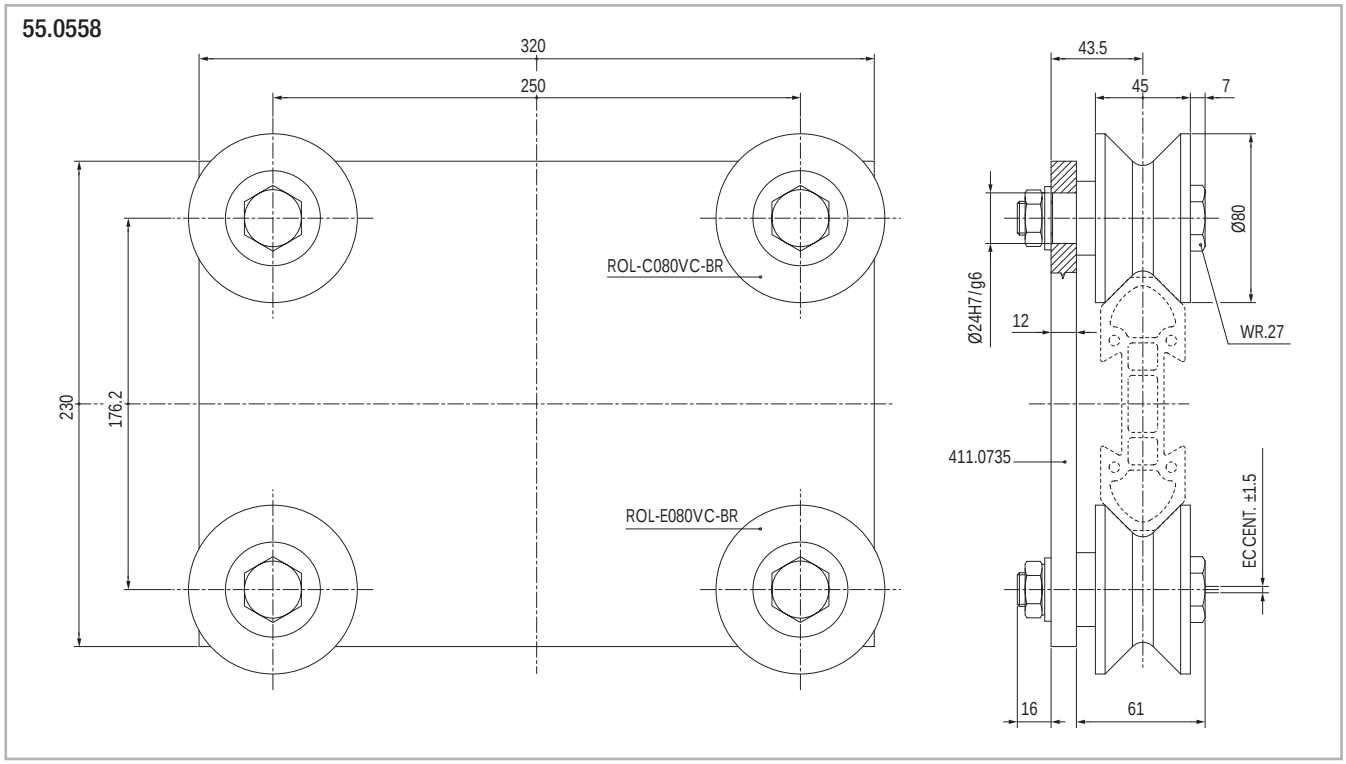

Fig. 100

The plate -cod. 411.0735 - is made in aluminium alloy with hard anodization. The rollers -cod. ROL-C080VC-BVA ROL-E080VC-BVA, carriage cod. 55.0636, - and/or different combinations from the ones shown on this page can be mounted on the above plates after consulting our technical department.

Plastic compound shell rollers

Concentric roller radial load: 1280 N max.
Lifetime lubrication

ROL-C052CCL-BV

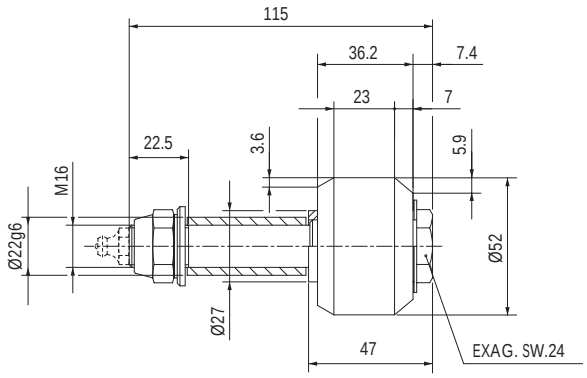

Periodical lubrication cod. ROL-C052CCL-BP — Fig. 101

Eccentric roller radial load: 1280 N max.
Lifetime lubrication

ROL-E052CCL-BV

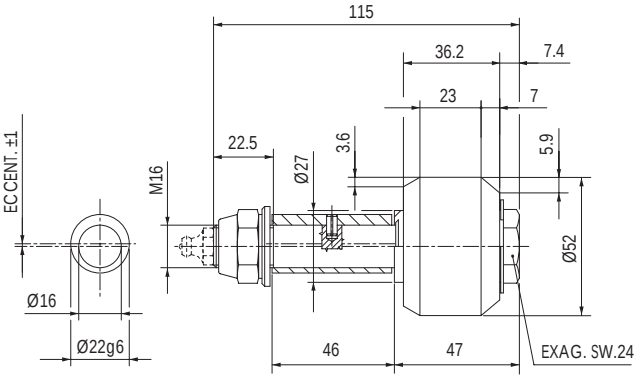

Periodical lubrication cod. ROL-E052CCL-BP — Fig. 102

Concentric roller radial load: 1280 N max. Periodical lubrication

ROL-C052CCC-BP

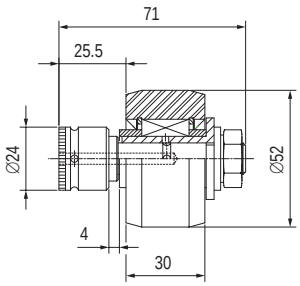

Lifetime lubrication cod. ROL-C052CCC-BV — Fig. 103

Eccentric roller radial load: 1280 N max. Periodical lubrication

ROL-E052CCC-BP

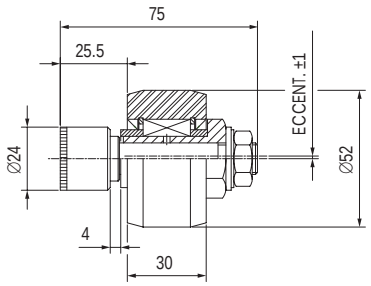

Lifetime lubrication cod. ROL-E052CCC-BV — Fig. 104

Concentric roller radial load: 880 N max.
Periodical lubrication

ROL-C040CC-BP

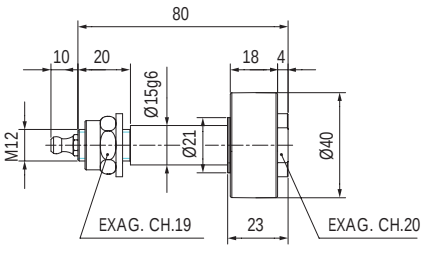

Lifetime lubrication cod. ROL-C052CCCBV — Fig. 105

Concentric roller radial load: 880 N max.
Lifetime lubrication

ROL-C040CC-BV

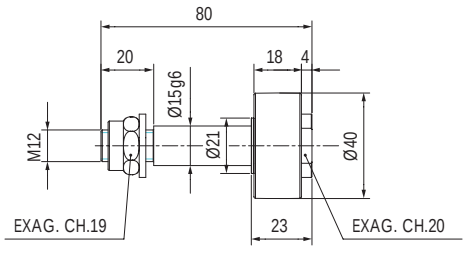

Lifetime lubrication cod. ROL-E052CCCBV — Fig. 106

S
R

2 Rollers light full-block assembly

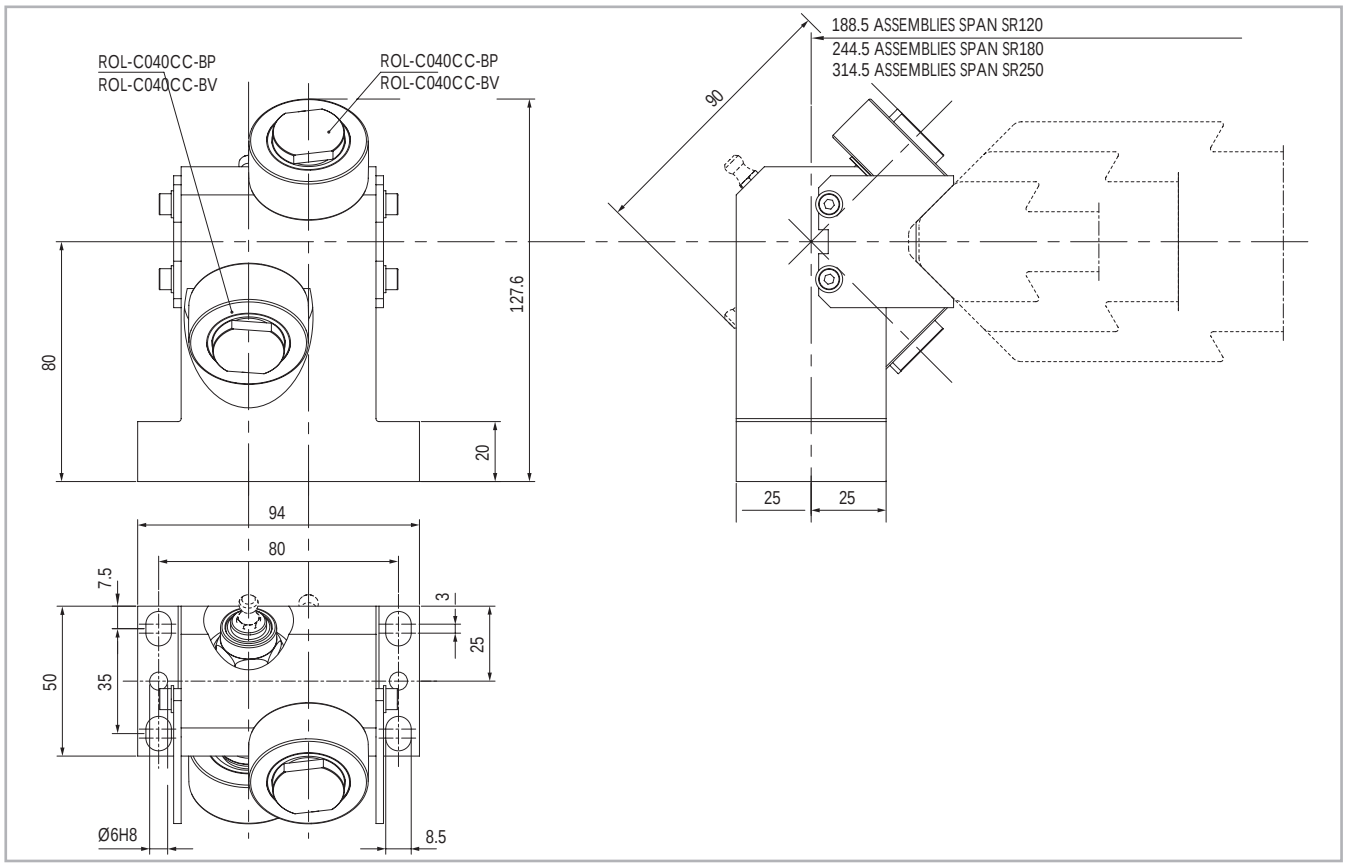

Fig. 107

55.1550
Light alloy rollers assembly with 2 Ø40 rollers. ROL-C040CC-BP
Periodical lubrication.

55.1570
Light alloy rollers assembly with 2 Ø40 rollers, ROL-C040CC-BV
Lifetime lubricated.

Compact roller assembly with plastic compound rollers

Light alloy compact roller assembly periodical lubrication version

55.0604

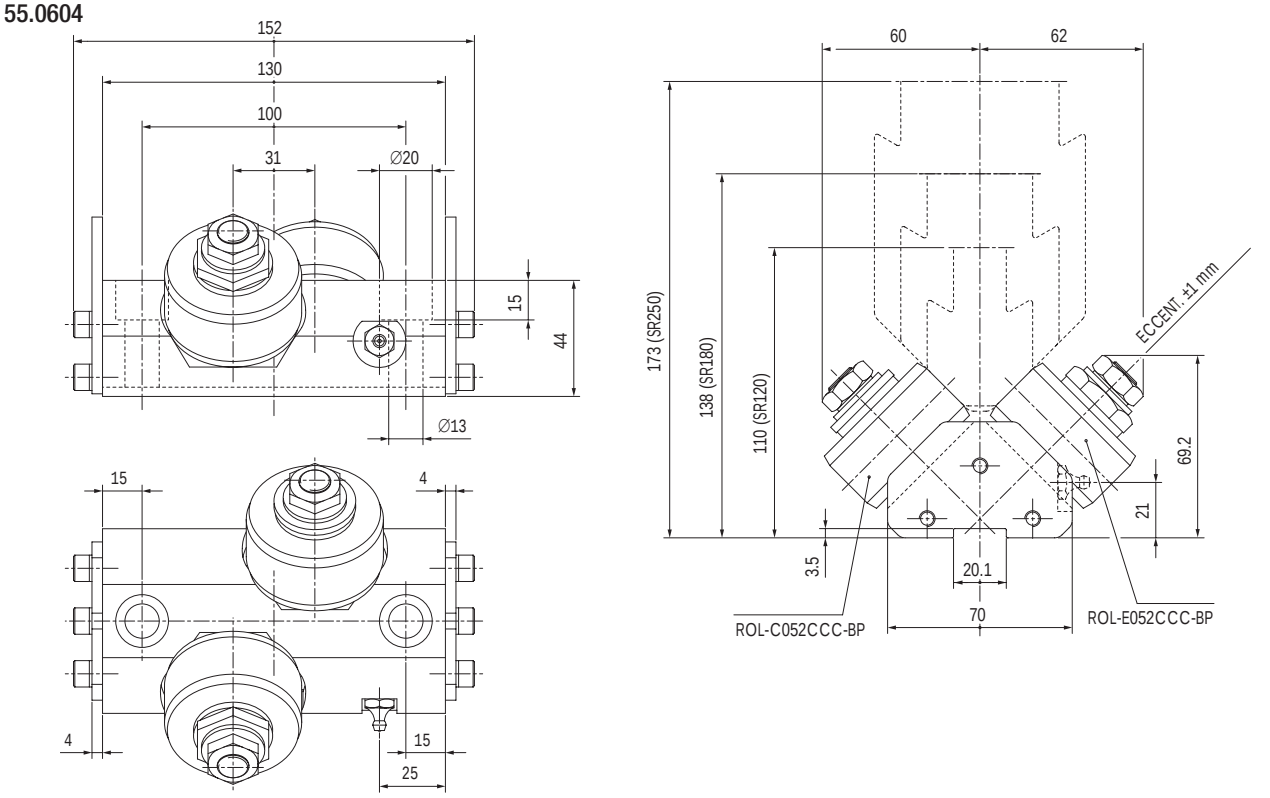

Fig. 108

Light alloy compact roller assembly lifetime lubrication version

55.0794

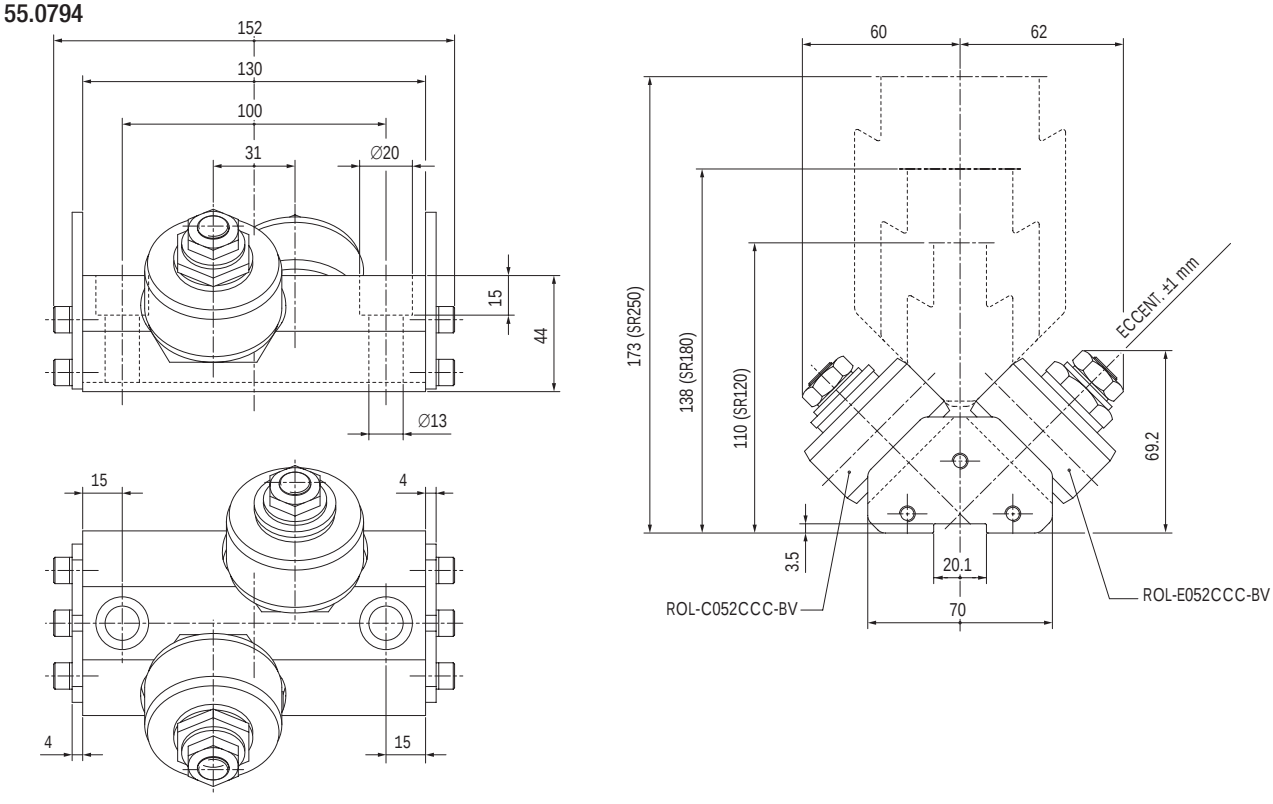

Fig. 109

Full-block roller assembly

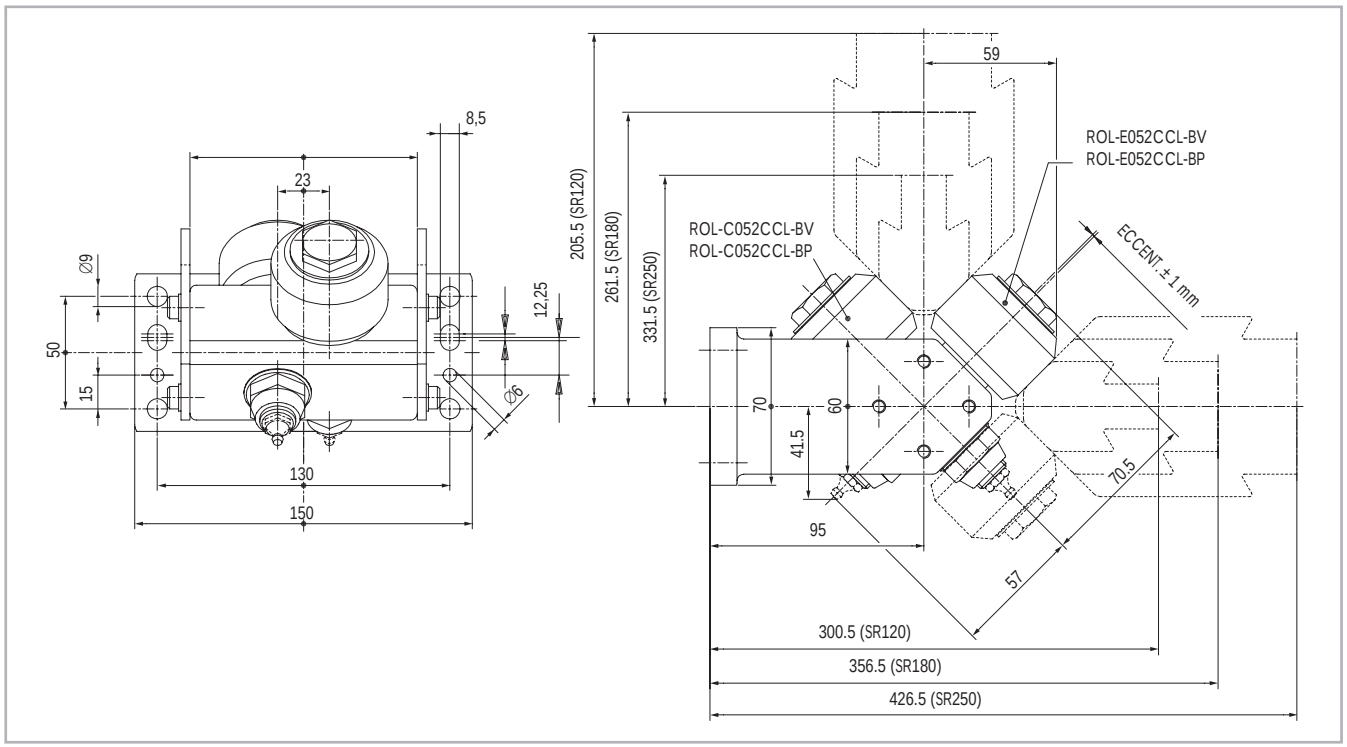

Fig. 110

55.0325
Light alloy body roller assembly with mounting holes on short sides and plastic compound rollers, periodical lubrication version, rollers ROL-C052CCL-BP, ROL-E052CCL-BP

55.0725
Lifetime lubrication version rollers ROL-C052CCL-BV, ROL-E052CCL-BV

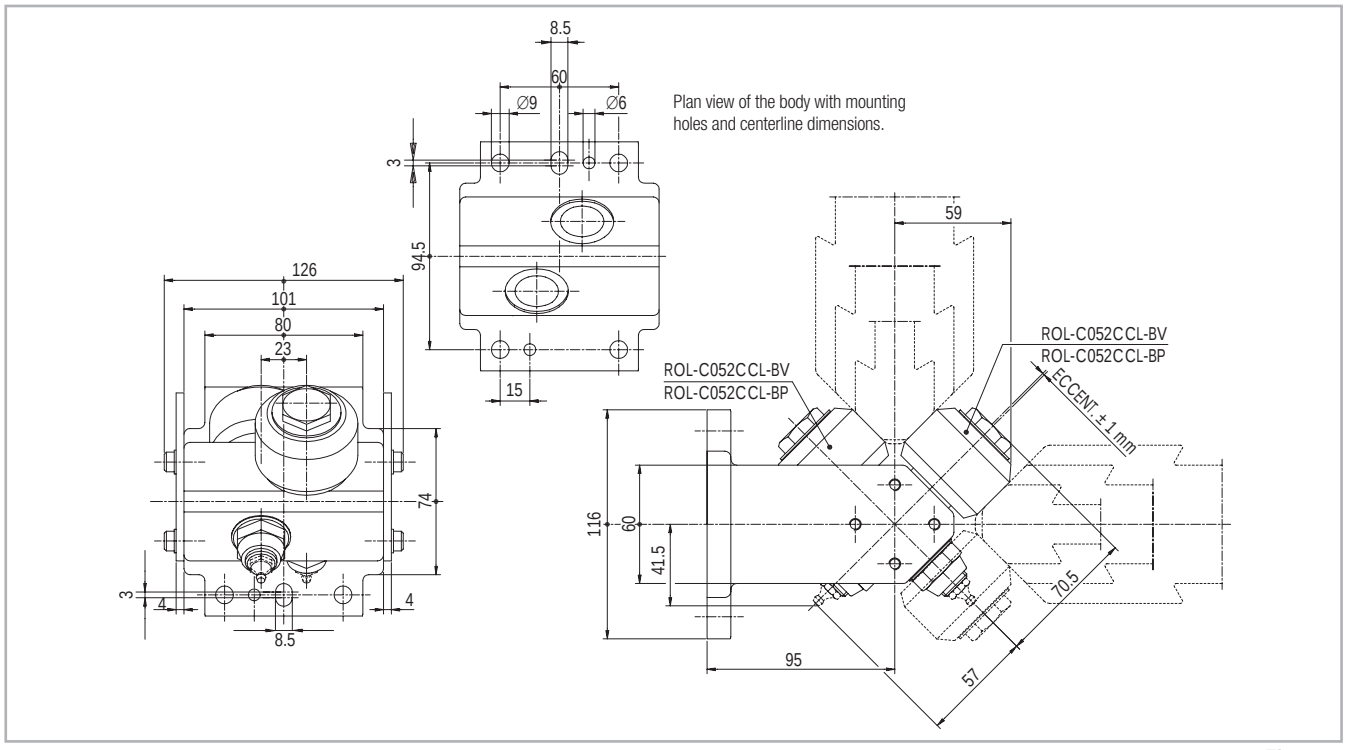

Fig. 111

55.0433
Light alloy body roller assembly with mounting holes on long sides and plastic compound rollers, periodical lubrication version, rollers ROL-C052CCL-BP, ROL-E052CCL-BP

55.0733
Lifetime lubrication version rollers ROL-C052CCL-BV, ROL-E052CCL-BV

Roller assembly with 4 rollers

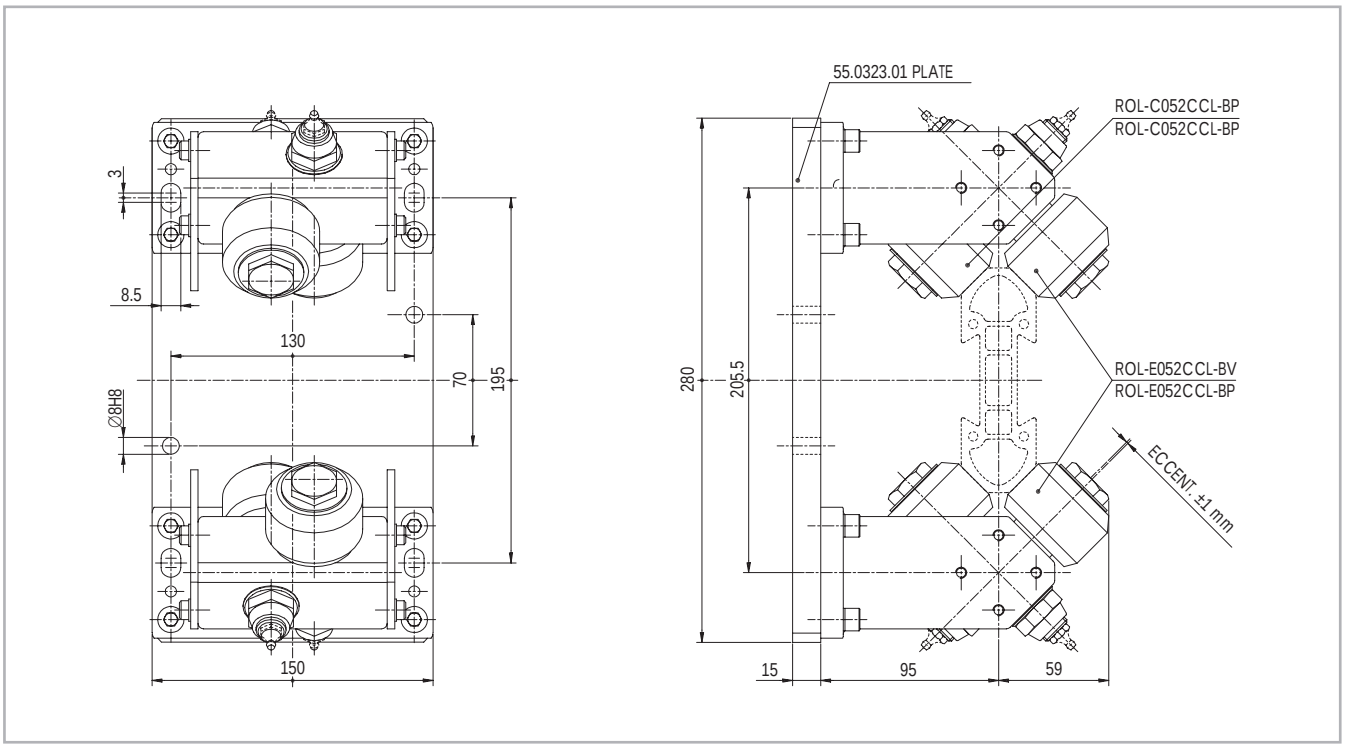

Fig. 112

55.0323
Roller assembly with backing plate 280x150x15.
Rollers ROL-C052CCL-BP, ROL-E052CCL-BP with periodical lubrication

55.0723
Roller assembly with backing plate 280x150x15.
Rollers ROL-C052CCL-BV, ROL-E052CCL-BV, lifetime lubricated

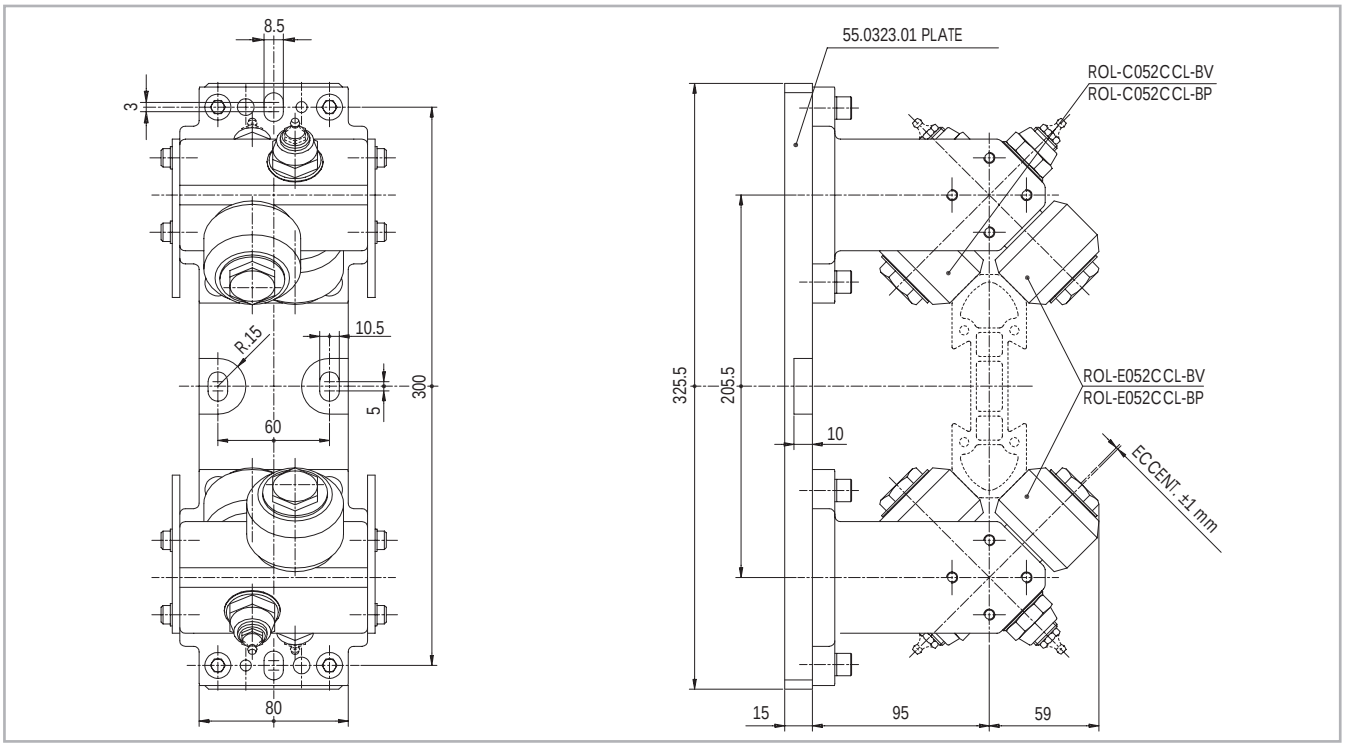

Fig. 113

55.0324
Roller assembly with backing plate 325.5x80x15.
Rollers ROL-C052CCL-BP, ROL-E052CCL-BP with periodical lubrication

55.0724
Roller assembly with backing plate 325.5x80x15.
Rollers ROL-C052CCL-BV, ROL-E052CCL-BV lifetime lubricated

Narrow/wide base blindo beam roller assembly

Narrow base roller assembly

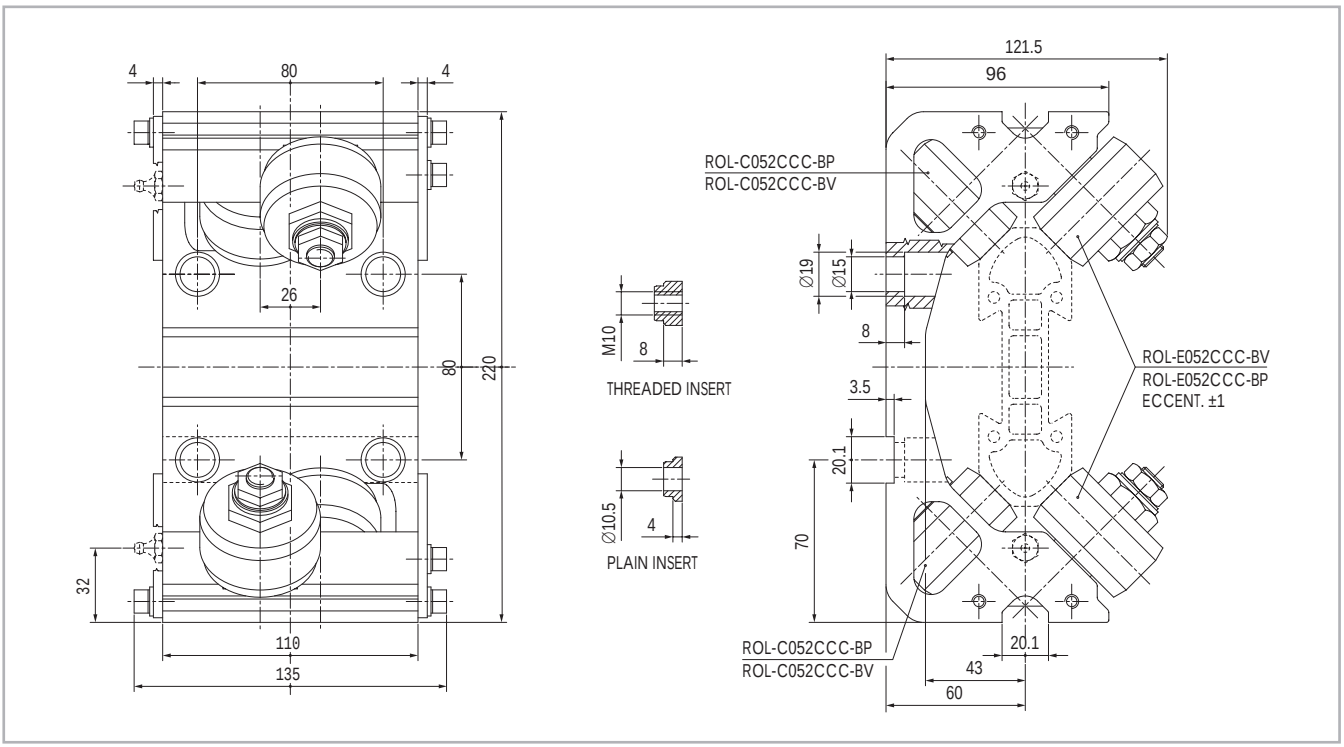

Fig. 114

55.0472-FIL
Equipped with 4 threaded fixing inserts
Periodical lubrication

55.0772-FIL
Equipped with 4 threaded fixing inserts
Lifetime lubrication

55.0472-PAS
Equipped with 4 through hole fixing inserts
Periodical lubrication

55.0772-PAS
Equipped with 4 through hole fixing inserts
Lifetime lubrication

Wide base roller assembly

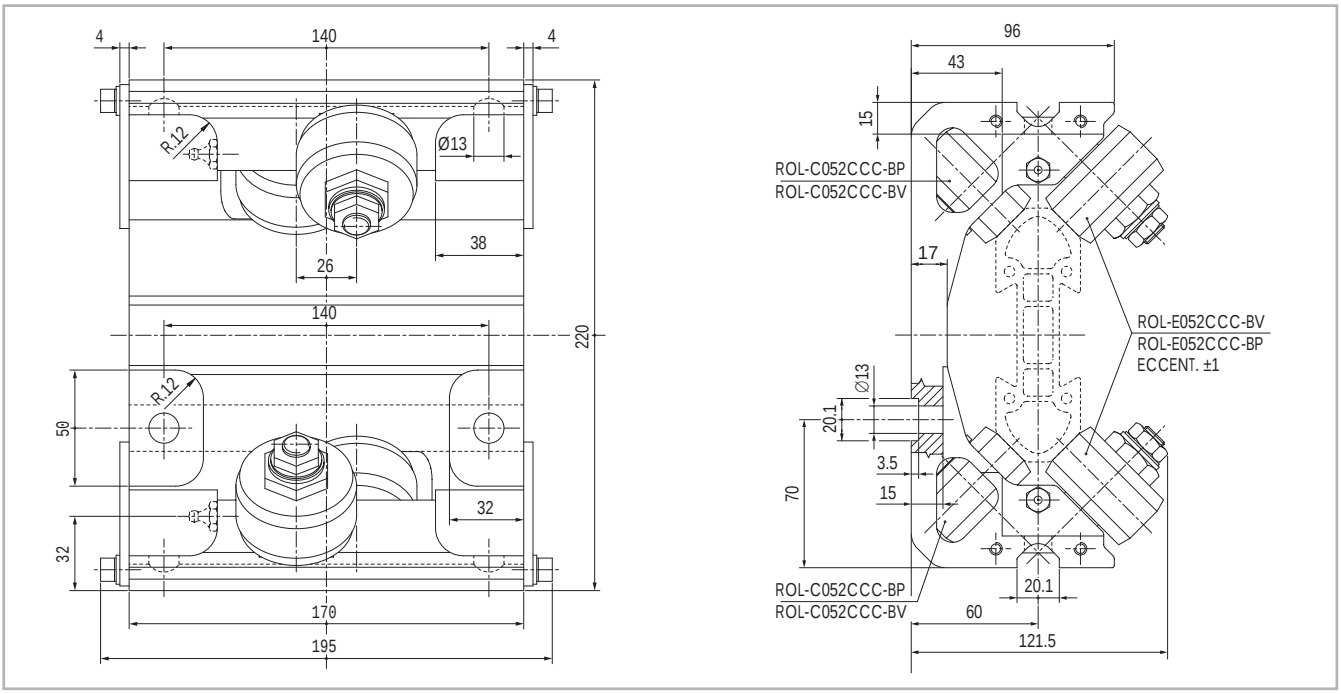

Fig. 115

55.0411
Periodical lubrication

55.0711
Lifetime lubrication

8 Rollers blindo beam roller assembly

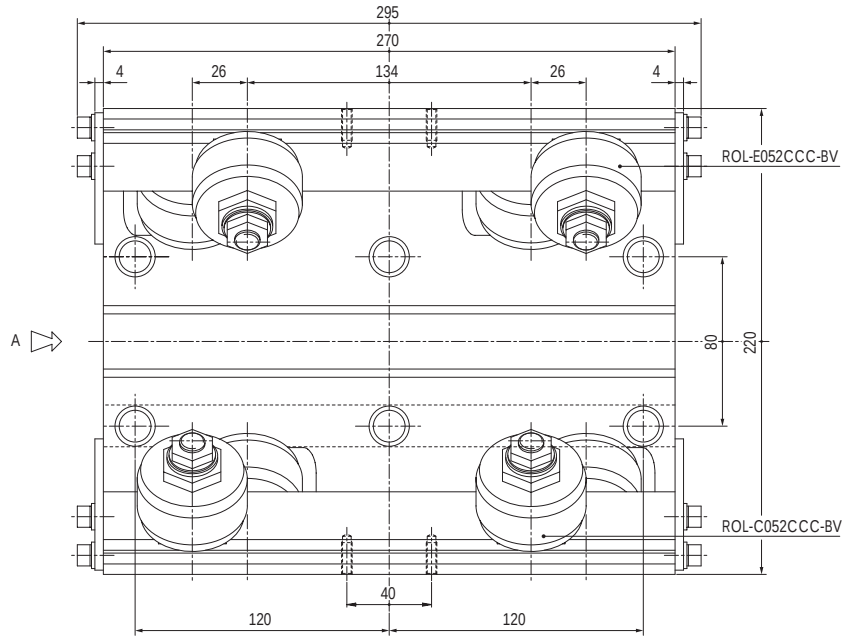

Fig. 116

55.0222-FIL
Equipped with 6 threaded fixing inserts
Lifetime lubrication

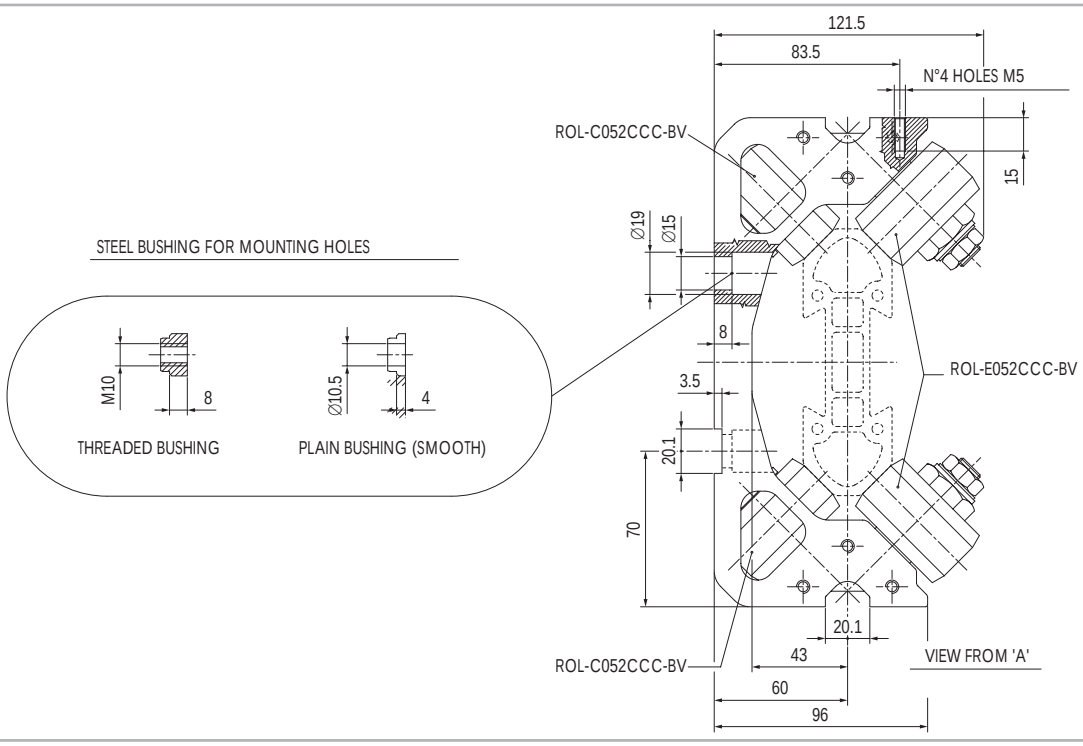

Fig. 117

55.0222-PAS
Equipped with 6 through hole fixing inserts
Lifetime lubrication

Light 4 rollers floating assembly for Speedy Rail guides

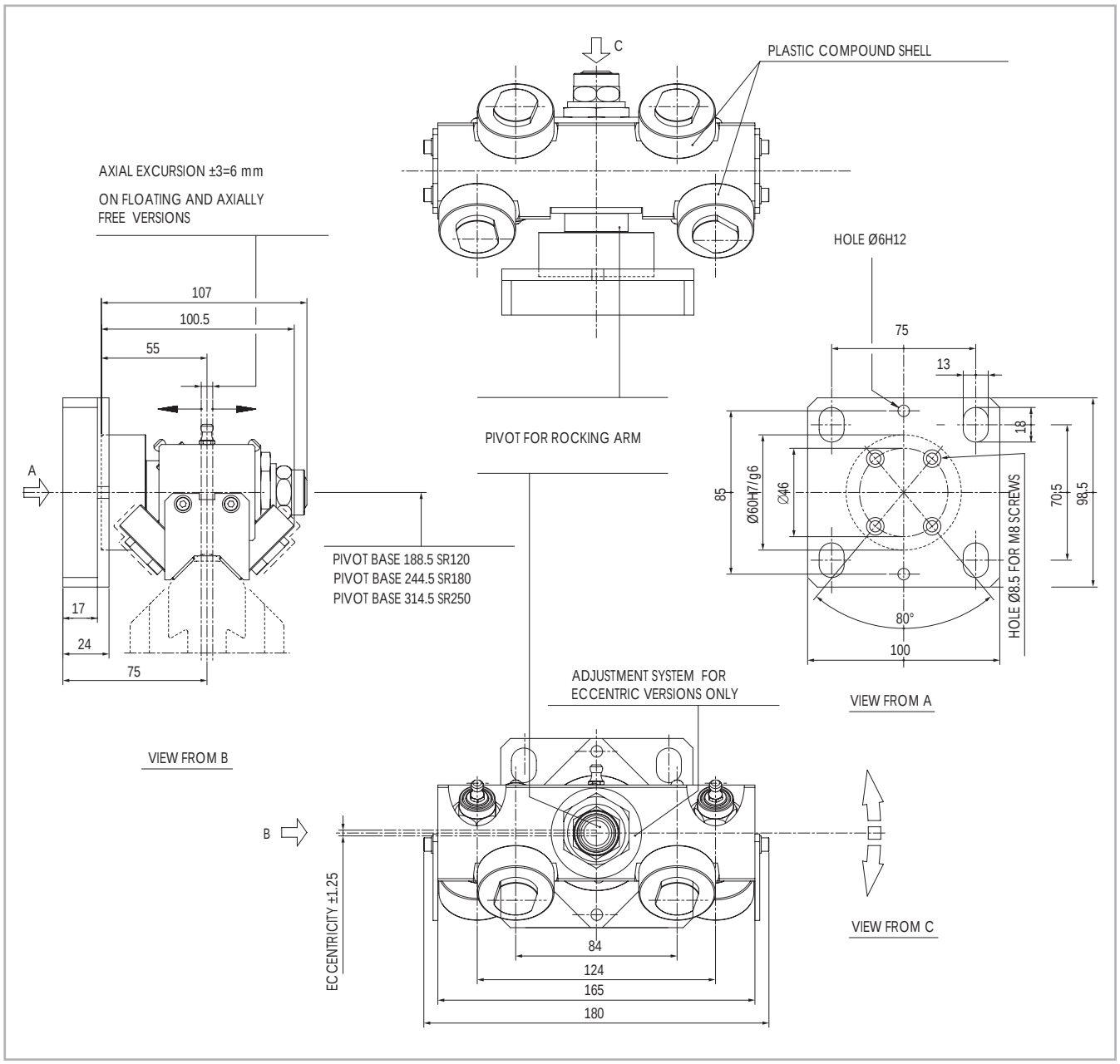

* Lubrication nipple mounted for periodic lubrication versions only

Fig. 118

Assemblies without baseplate have the same code followed by "SP"
(i.e. 55.1565/SP)

Roller assemblies reference		Axially constrained	Axially free	Rollers code
PERIODICAL LUBRICATION	ECC.	55.1565	55.3563	ROL-C040CC-BP
	CONC.	55.1566	55.3564	
LIFETIME LUBRICATION	ECC.	55.1555	55.3553	ROL-C040CC-BV
	CONC.	55.1556	55.3554	

Tab. 10

Floating roller assembly with 4 rollers - short/long pivot

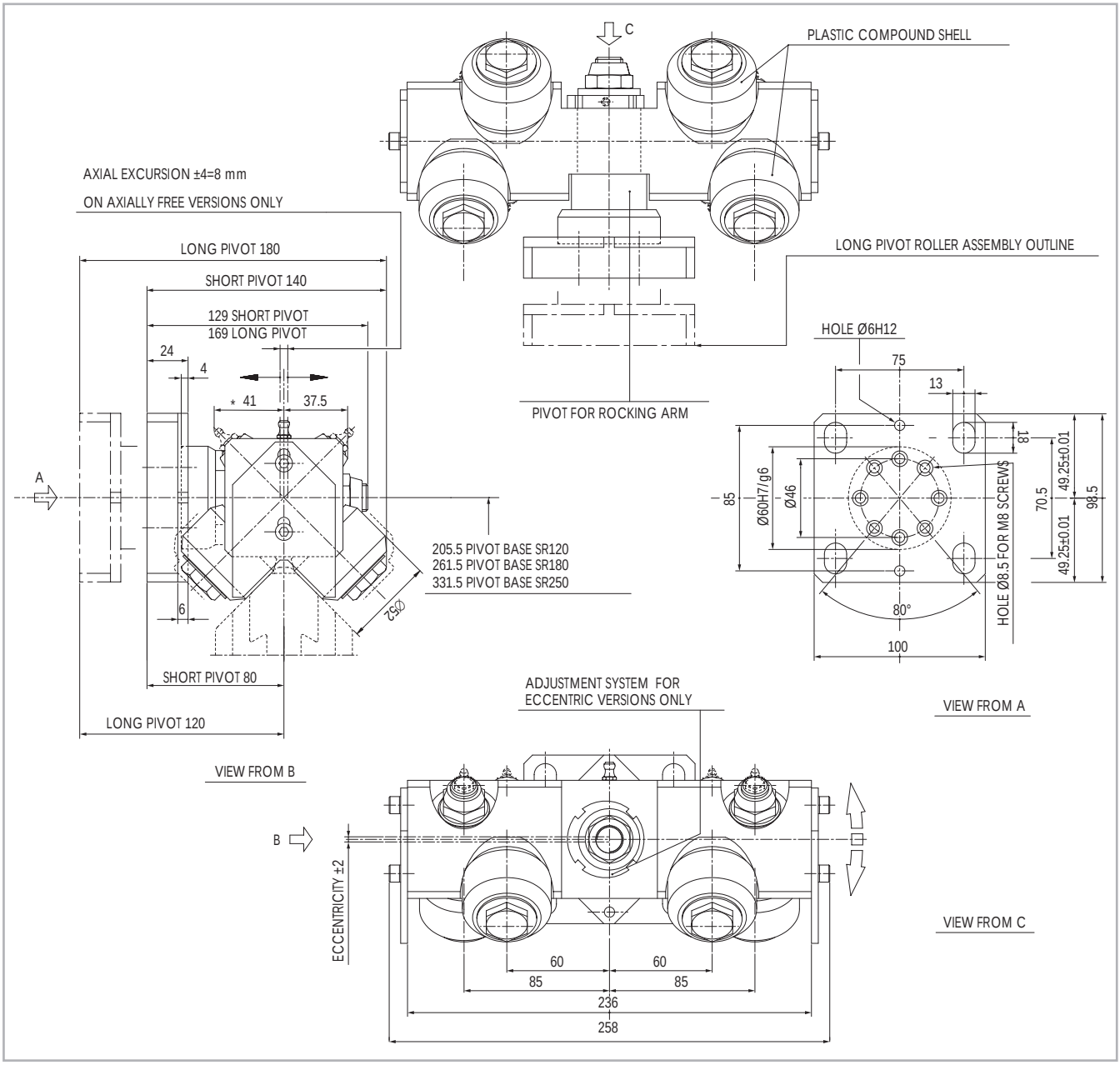

* Lubrication nipple mounted for periodic lubrication versions only

Fig. 119

Notes:

The axially free version of the assemblies are normally mounted on trolleys running on parallel rails. Coupled with axially constrained assemblies provide a flexible structure able to withstand minor misallignements between runways.

Assemblies without baseplate have the same code followed by "SP" (ad es. 55.1361/SP).

Roller assemblies reference			Axially constrained	Axially free	Rollers code
Short pivot	PERIODICAL LUBRICATION	ECC.	55.1361	55.3361	ROL-C052C-CL-BP
		CONC.	55.1364	55.3364	
	LIFETIME LUBRICATION	ECC.	55.1354	55.1358	ROL-C052C-CL-BV
		CONC.	55.1355	55.1359	
Long pivot	PERIODICAL LUBRICATION	ECC.	55.1363	55.3363	ROL-C052C-CL-BP
		CONC.	55.1365	55.3365	
	LIFETIME LUBRICATION	ECC.	55.1350	55.3350	ROL-C052C-CL-BV
		CONC.	55.1351	55.3351	

Tab. 11

Rollers assembly, one fixed, one self adjusting

Fixed 6 concentric rollers assembly

55.1135

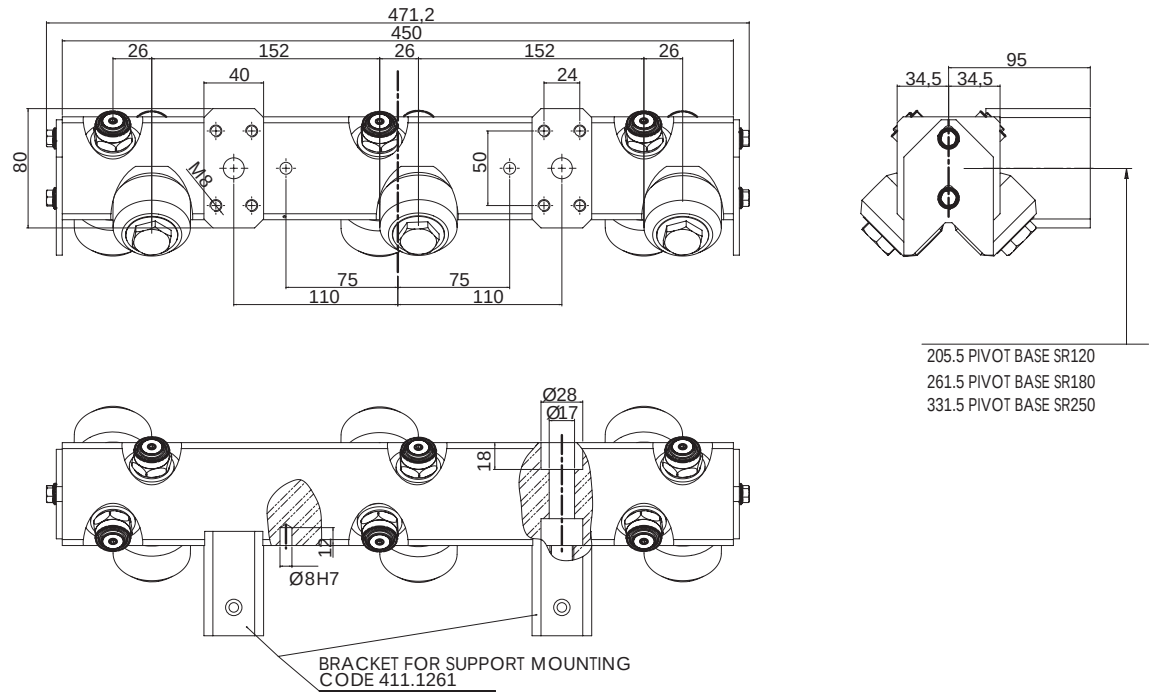

Fig. 120

Fixed 5 roller assembly, with 2 eccentric rollers for auto backlash retrival

55.1136

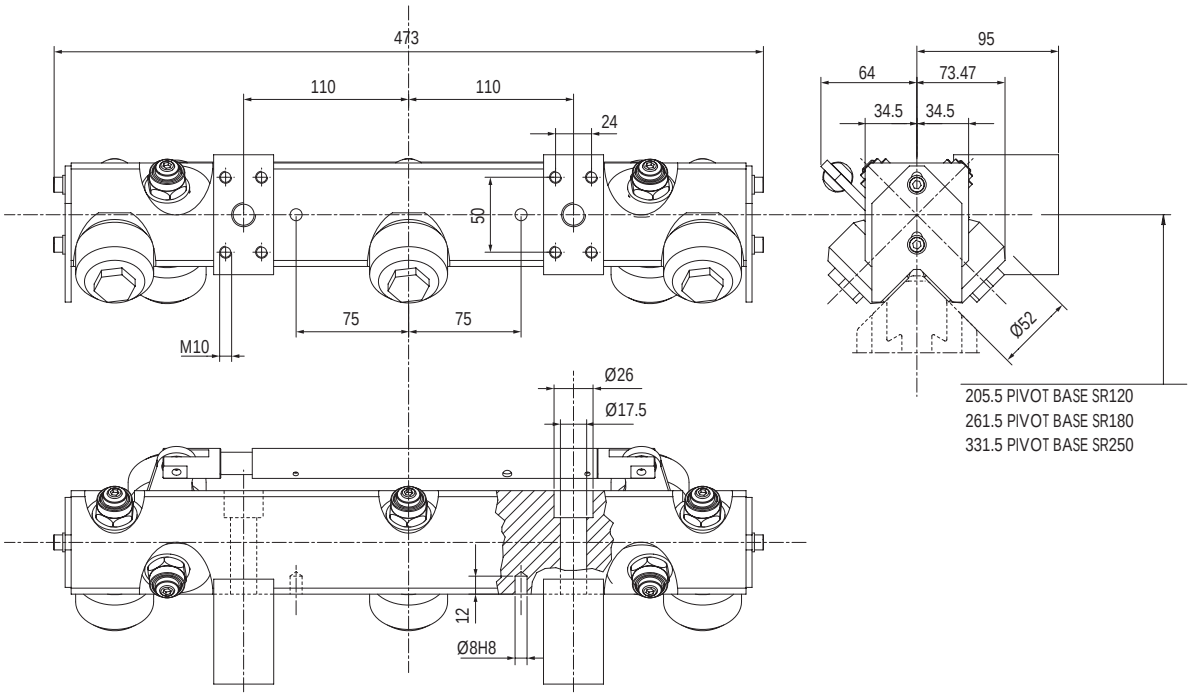

Fig. 121

Floating roller assembly with 6 rollers - short/long pivot

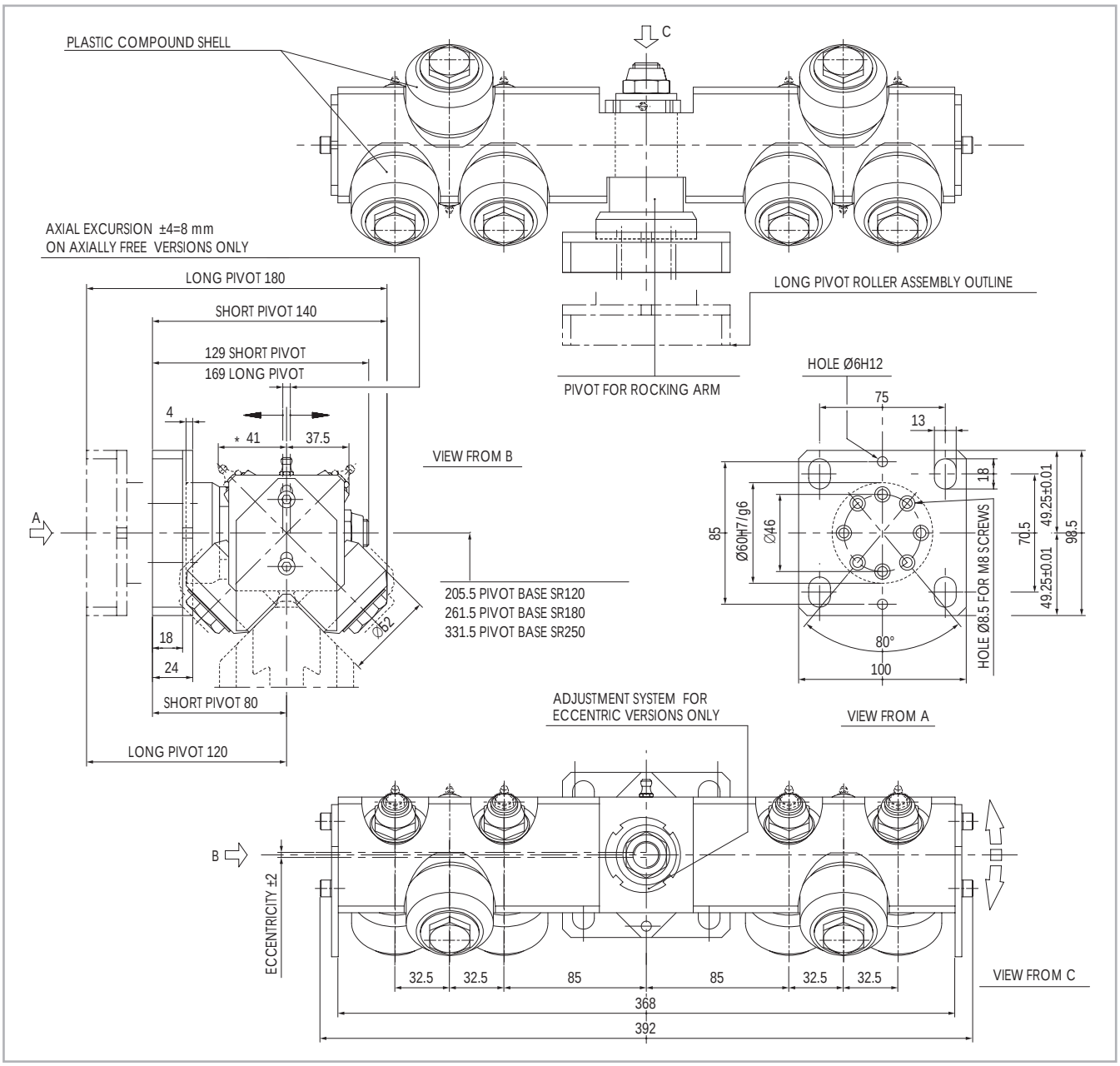

* Lubrication nipple mounted for periodic lubrication versions only

Fig. 122

Notes:

The axially free version of the assemblies are normally mounted on trolleys running on parallel rails. Coupled with axially constrained assemblies provide a flexible structure able to withstand minor misallignements between runways.

Assemblies without baseplate have the same code followed by "SP" (i.e. 55.1366/SP).

Roller assemblies reference			Axially constrained	Axially free	Rollers code
Short pivot	PERIODICAL LUBRICATION	ECC.	55.1423	55.3423	ROL-C052CCL-BP
		CONC.	55.1424	55.3424	
	LIFETIME LUBRICATION	ECC.	55.1425	55.3425	ROL-C052CCL-BV
		CONC.	55.1426	55.3426	
Long pivot	PERIODICAL LUBRICATION	ECC.	55.1419	55.3419	ROL-C052CCL-BP
		CONC.	55.1420	55.3420	
	LIFETIME LUBRICATION	ECC.	55.1421	55.3421	ROL-C052CCL-BV
		CONC.	55.1422	55.3422	

Tab. 12

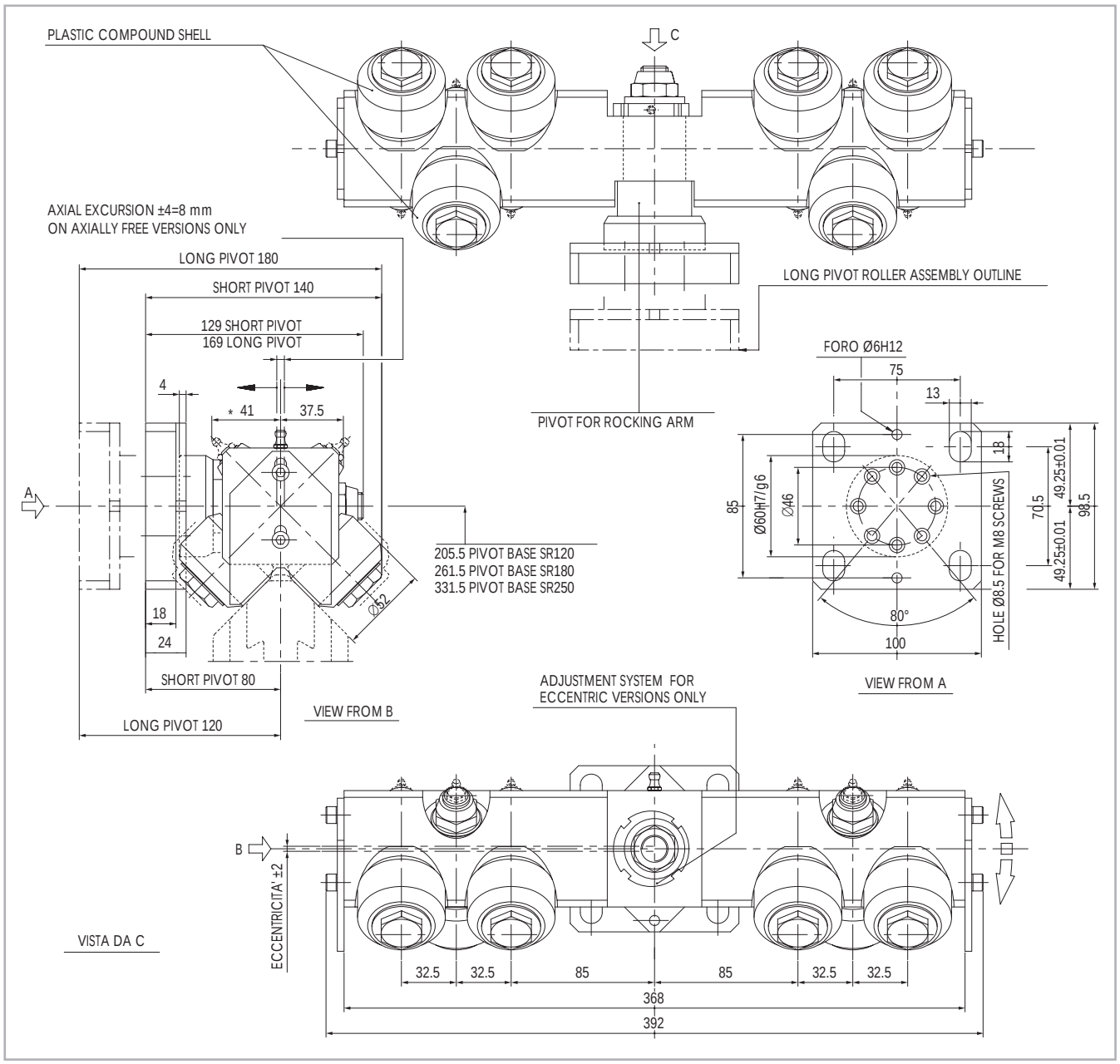

* Lubrication nipple mounted for periodic lubrication versions only

Fig. 123

Notes:

The axially free version of the assemblies are normally mounted on trolleys running on parallel rails. Coupled with axially constrained assemblies provide a flexible structure able to withstand minor misallignements between runways.

Assemblies without baseplate have the same code followed by "SP" (i.e. 55.1366/SP)

Roller assemblies reference			Axially constrained	Axially free	Rollers code
Short pivot	PERIODICAL LUBRICATION	ECC.	55.1366	55.3366	ROL-C052CCL-BP
		CONC.	55.1370	55.3370	
	LIFETIME LUBRICATION	ECC.	55.1367	55.3367	ROL-C052CCL-BV
		CONC.	55.1371	55.3371	
Long pivot	PERIODICAL LUBRICATION	ECC.	55.1368	55.3368	ROL-C052CCL-BP
		CONC.	55.1372	55.3372	
	LIFETIME LUBRICATION	ECC.	55.1369	55.3369	ROL-C052CCL-BV
		CONC.	55.1373	55.3373	

Tab. 13

Floating roller assembly with 8 rollers - short/long pivot

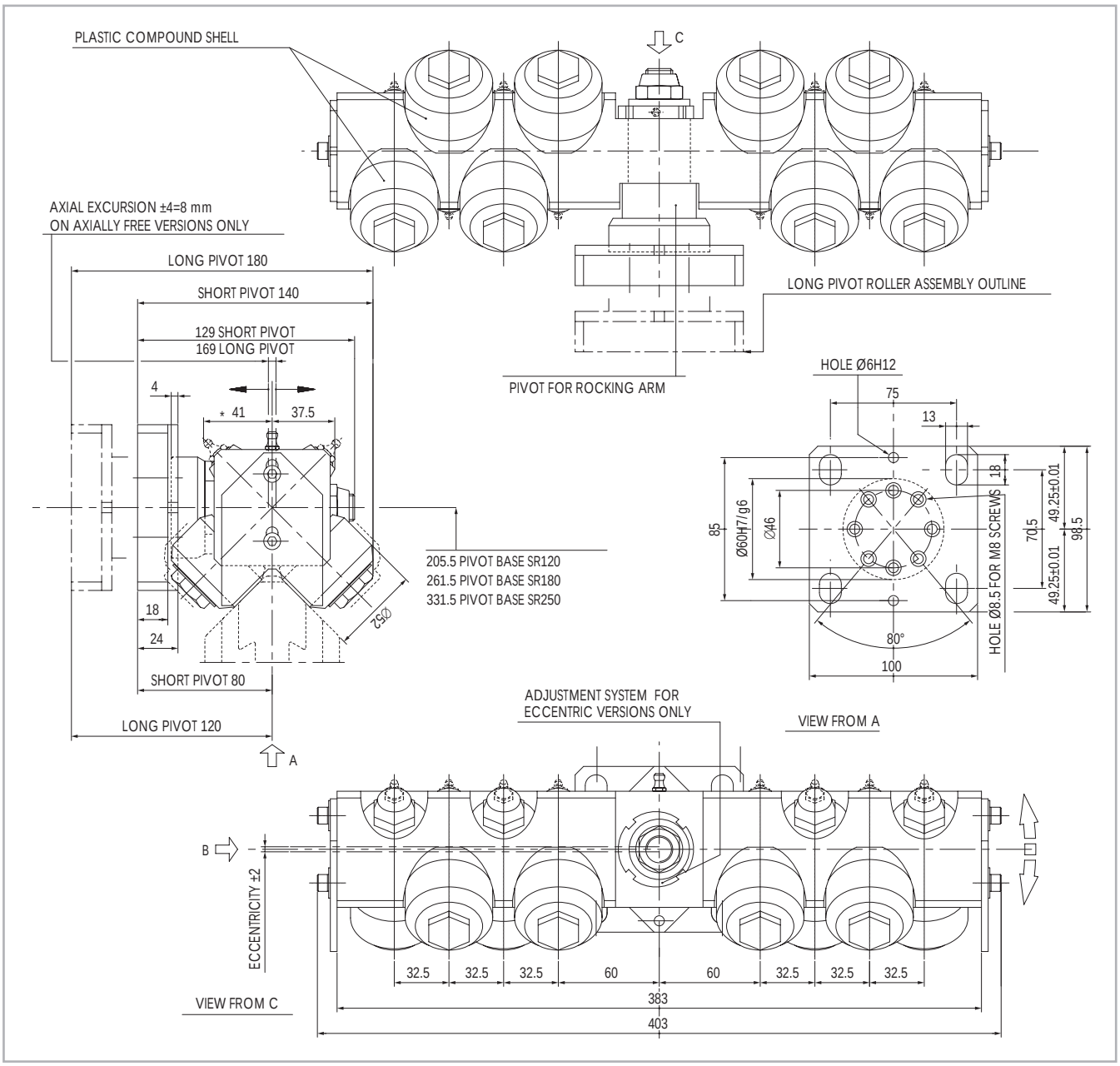

* Lubrication nipple mounted for periodic lubrication versions only

Fig. 124

Notes:

The axially free version of the assemblies are normally mounted on trolleys running on parallel rails. Coupled with axially constrained assemblies provide a flexible structure able to withstand minor misallignements between runways.

Assemblies without baseplate have the same code followed by "SP" (i.e. 55.1366/SP).

Roller assemblies reference			Axially constrained	Axially free	Rollers code
Short pivot	PERIODICAL LUBRICATION	ECC.	55.1143	55.3143	ROL-C052CCL-BV
		CONC.	55.1144	55.3144	
	LIFETIME LUBRICATION	ECC.	55.1145	55.3145	ROL-C052CCL-BV
		CONC.	55.1146	55.3146	
Long pivot	PERIODICAL LUBRICATION	ECC.	55.1147	55.3147	ROL-C052CCL-BP
		CONC.	55.1148	55.3148	
	LIFETIME LUBRICATION	ECC.	55.1149	55.3149	ROL-C052CCL-BV
		CONC.	55.1150	55.3150	

Tab. 14

Assembling diagram for rigid mounted rack

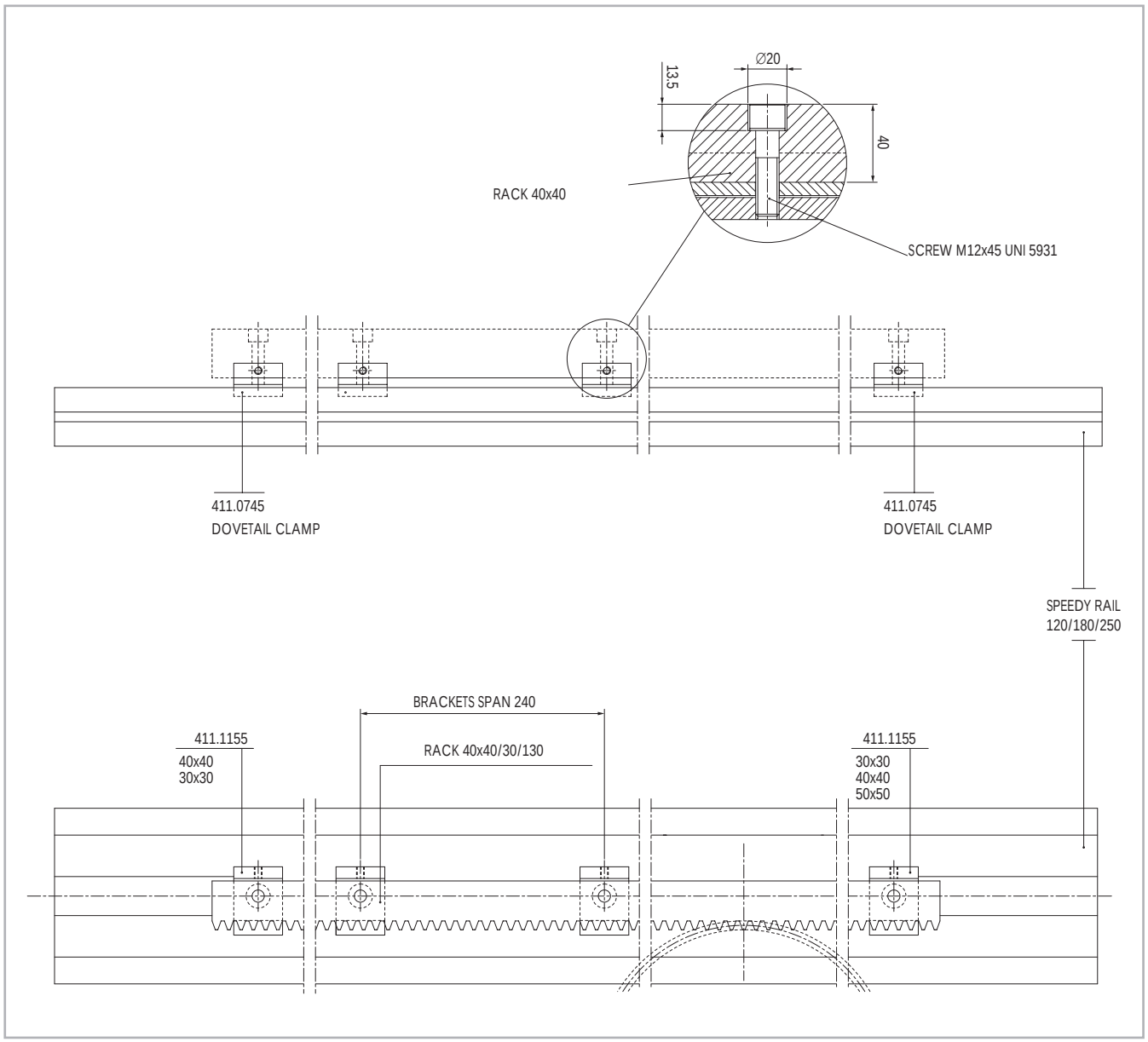

Fig. 125

Standard racks

Straight toothed hardened rack

Cod.	C	D	d	E	F	H	L	N	P	Mod.
411.1489	10	11	7	19,41	7	20	998,82	5	240	2
411.1491	10	11	7	42,07	7	20	2004,14	9	240	2
411.1499	17	14	9	19,41	9	30	998.82	5	240	3
411.1501	17	14	9	38,92	9	30	1997,84	9	240	3
411.1509	20,5	17	11	22,55	11	40	1005,10	5	240	4
411.1511	20.5	17	11	45,21	11	40	2010,42	9	240	4

Tab. 15

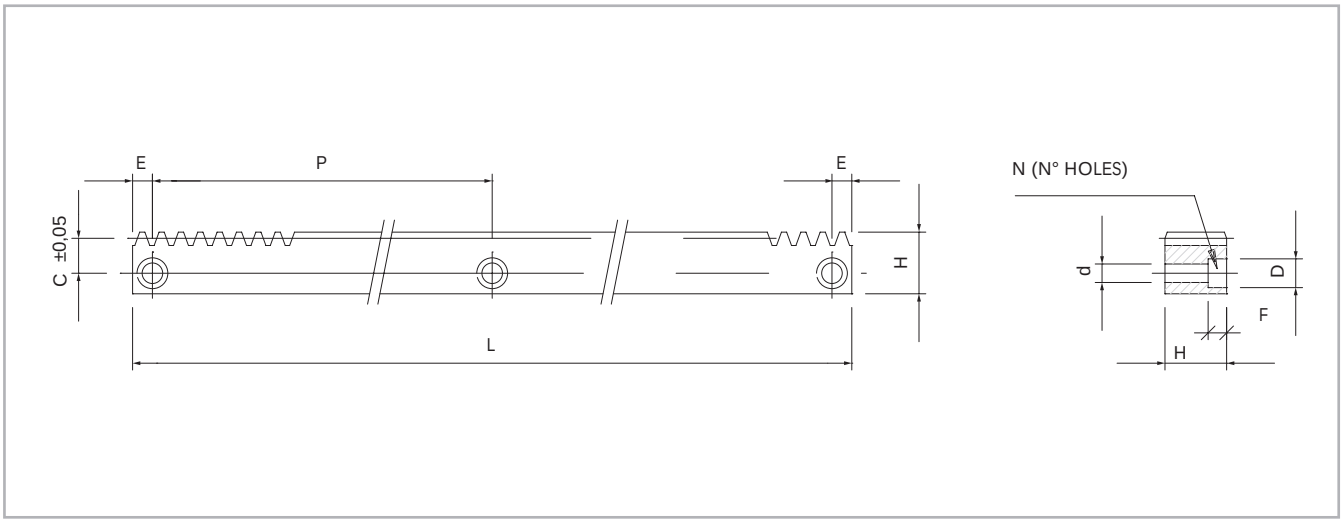

Fig. 126

Indexing rack mounting components

Rack	Mounting plates	Dovetails	Inserts
m2	SR-16, SR-22, SR-54, SR-62	SR-15, SR-22, SR-29	SR-53
m3	SR-30, SR-54, SR-62	SR-29	SR-53
m4	SR-30, SR-54, SR-62	SR-29	SR-53

Tab. 16

Standard scrapers

Scraper for floating and full-block assemblies

411.0685

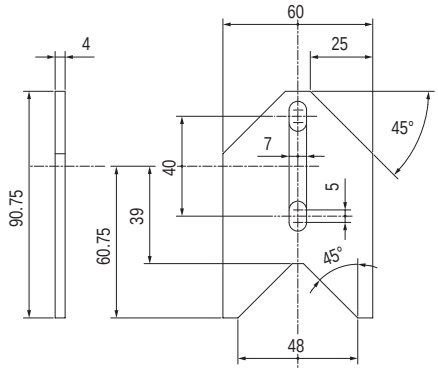

Fig. 127

Scraper for compact

411.0686

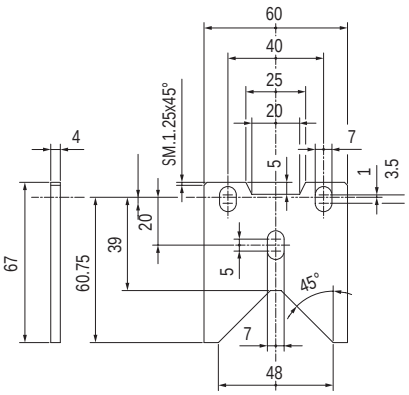

Fig. 128

Sliding brush for speedy rail and steel rail.
Brushes are kept against tracks by springs.

55.1000

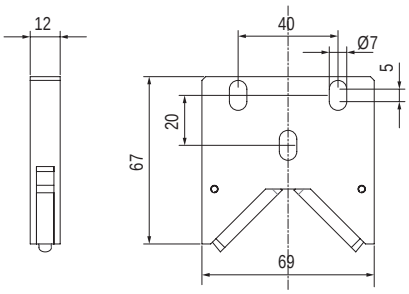

Fig. 129

Scraper for light floating rollers assemblies

55.1794.05

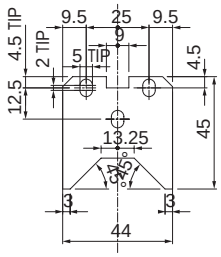

Fig. 130

Scraper for blindo beam roller assemblies

55047202

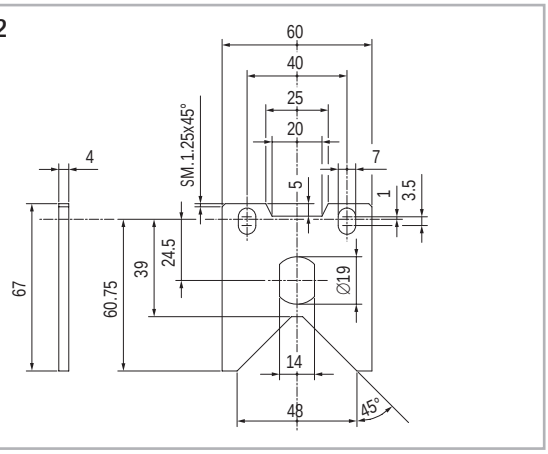

Fig. 131

Note:

All roller assemblies are equipped with the relate scrapers.

Speedy Rail 180

Wide body multi groove speedy rail guide and specifications

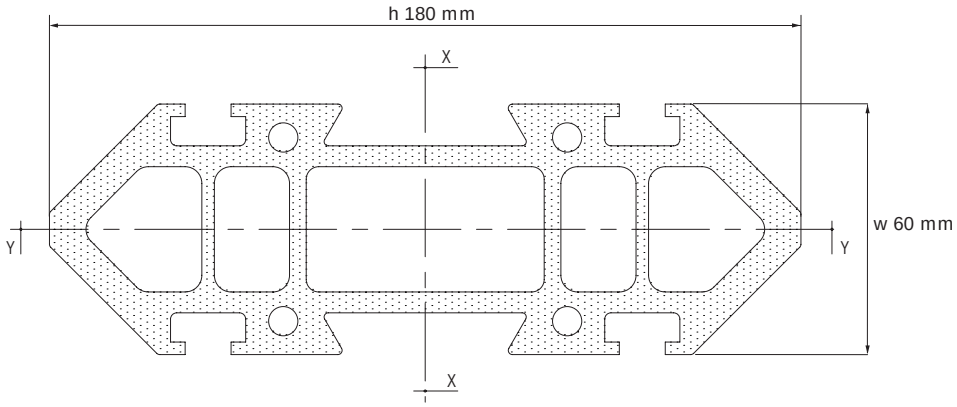

Fig. 132

Surface quadratic moment: X-X axis = 10.291.100 mm4 / Y-Y axis = 1.278.700 mm4.

Max. manufacturing tolerances = ±0.30 mm across opposite rolling surfaces.

Max. angular distorsion = ±20'/m.

Linear mass = 10.2 Kg/m.

Max. linear distorsion = ±0.7 mm/m.

Standard lengths: 3000-3500-4000-4500-5000-5500-6000-6500-7000-7500 mm.

External surface: deep hard anodizing

Roller assemblies and components

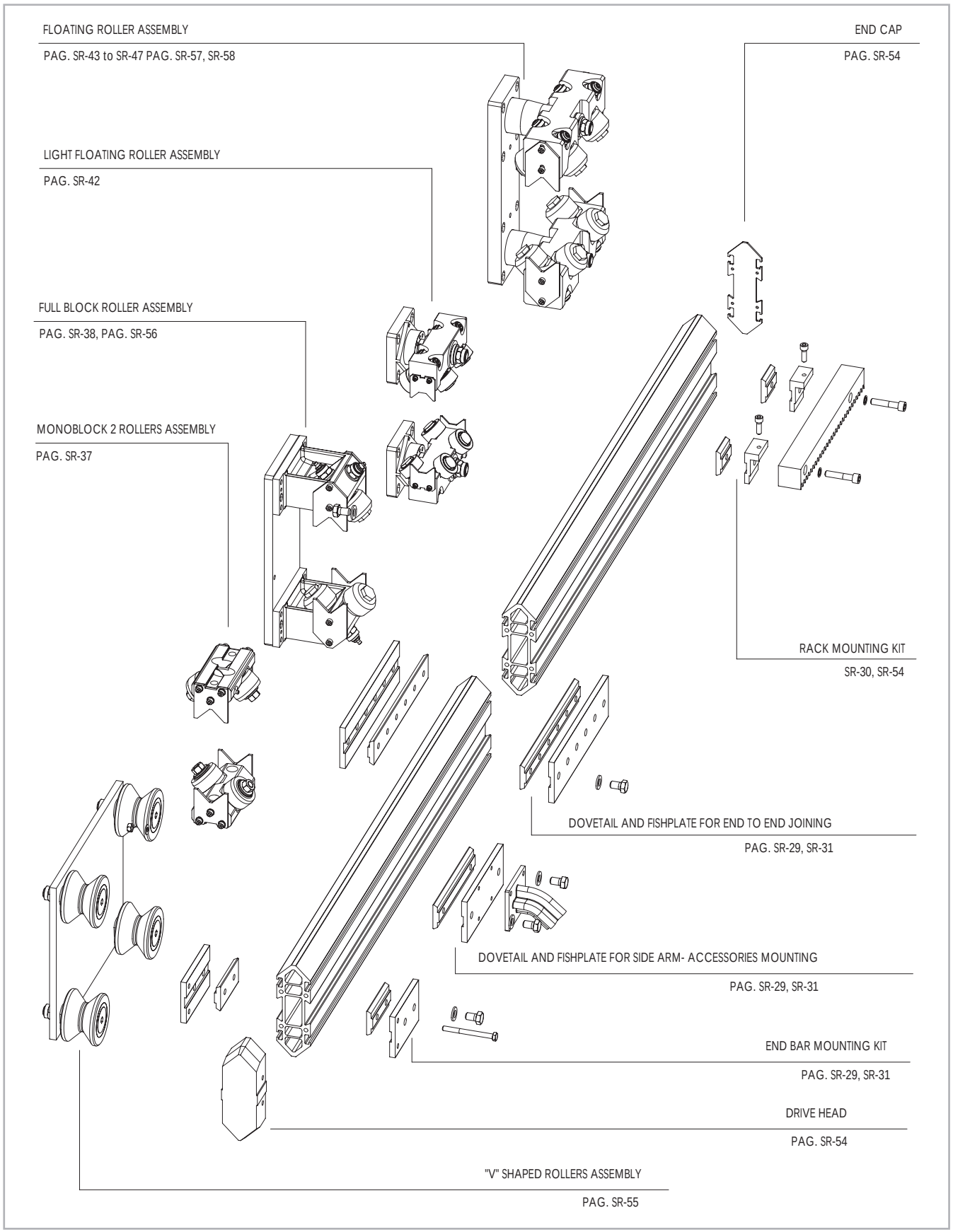

Fig. 133

Wide body multi groove speedy rail guide and specifications

Speedy Rail 180 with plain ends: SR180-T

Speedy Rail 180 with drilled ends: SR180-F

SR180-T
SR180-F

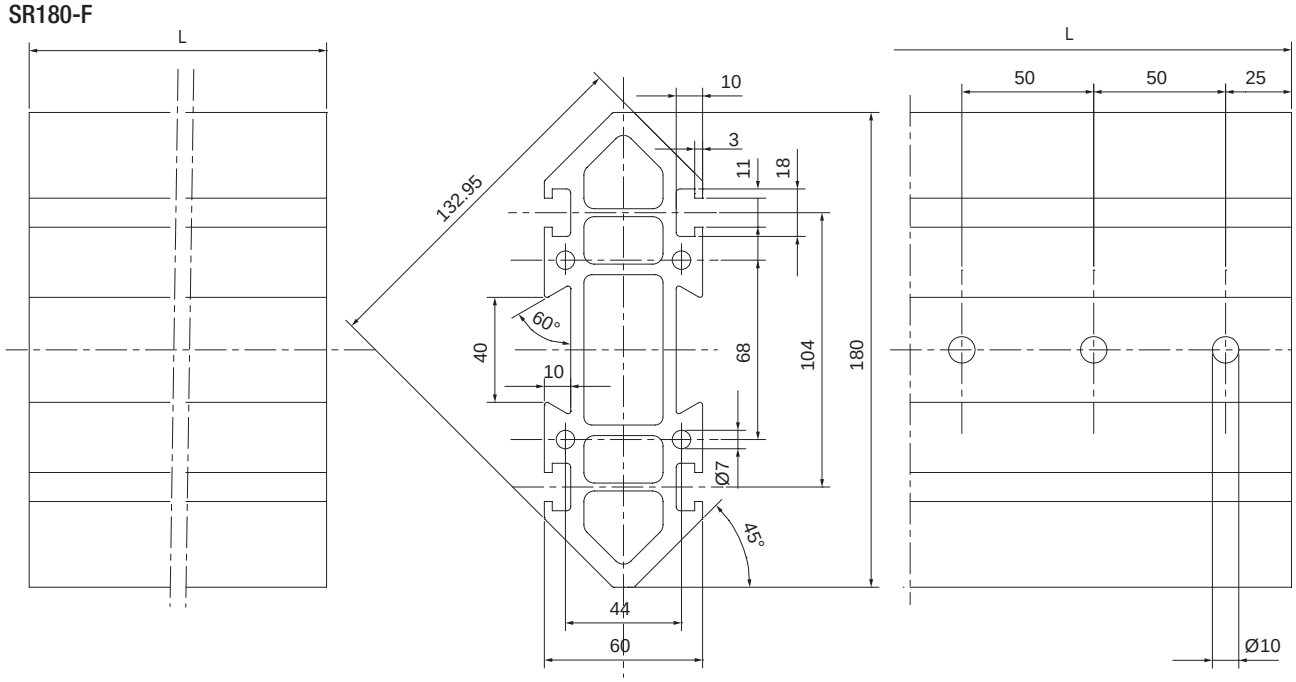

Fig. 134

Note:

Drillings on the bar end are required as a safety measure whith end-to-end joining in moving rails.

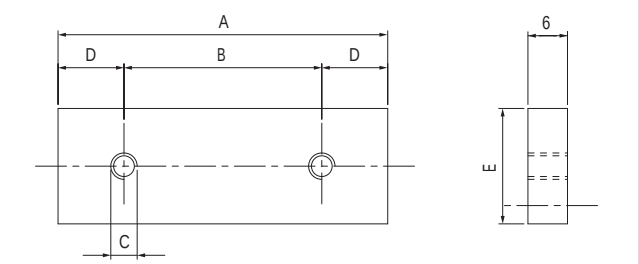

Fig. 135

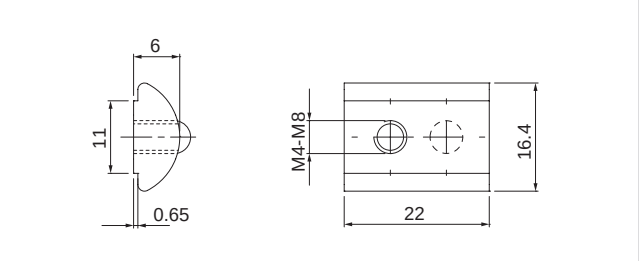

Fig. 136

Wide body multi groove speedy rail guide (SR180) uses the same dovetails, plates, fishplates and joining components of speedy rail standard (SR120 section) see page SR-29, SR-30, SR-31.

Insert

A	B	C	D	E	Material	N° Holes	Cod.
496	60	M4	8	16	Burnished steel	9	411.2534
496	60	M5	8	16		9	411.2533
496	80	M6	8	16		9	411.3633

Tab. 17

Insert

A	B	C	D	E	Material	N° Holes	Cod.
-	-	M4	-	-	Zinc plated steel	1	411.1349
-	-	M5	-	-		1	411.1351
-	-	M6	-	-		1	411.1352
-	-	M8	-	-		1	411.1353

Tab. 18

Components for wide body multi groove Speedy Rail guide

Drive head

411.0696

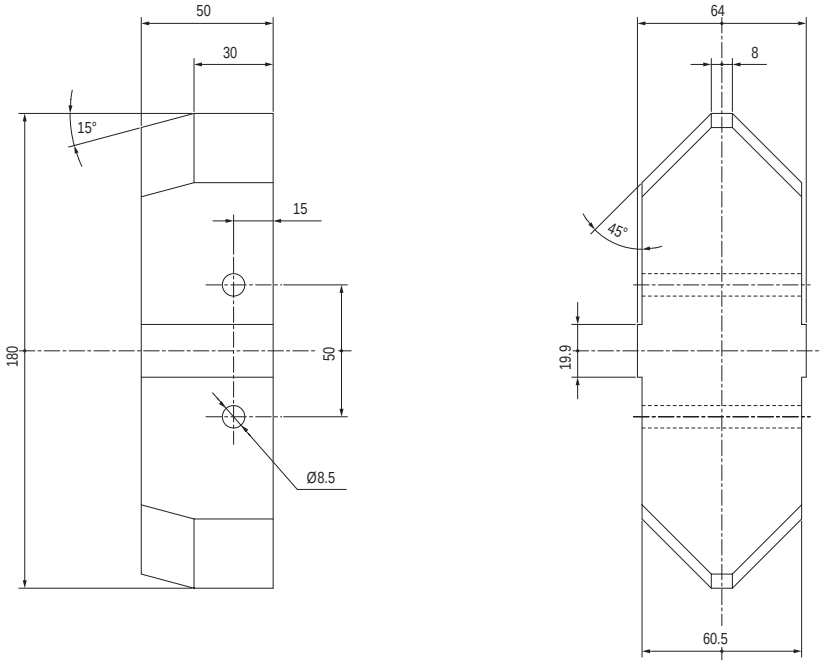

Fig. 137

Bolt for drive head

411.0744

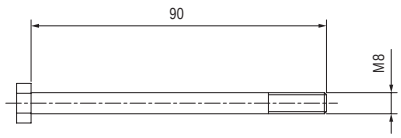

Fig. 138

Aluminium alloy end cap

411.1964

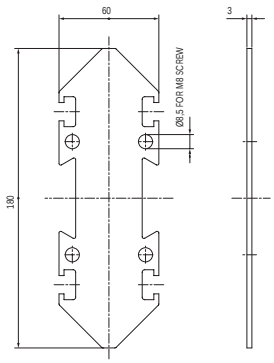

Fig. 139

Fishplate for mod.2 Rack mounting on SR180, SR250 T grooves

411.1179

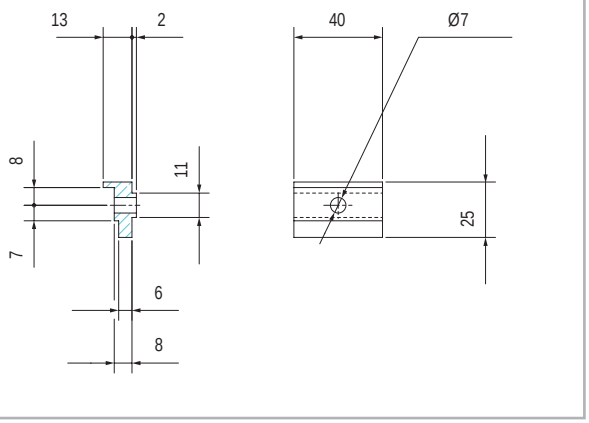

Fig. 140

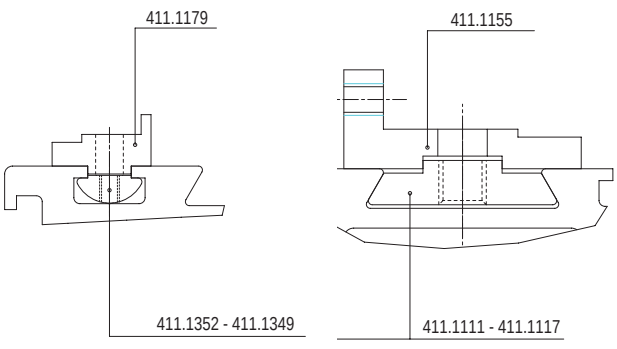

Fig. 141

For rack mounting plate mod.2 Use insert 411.1352

Roller assembly with "V" shaped rollers

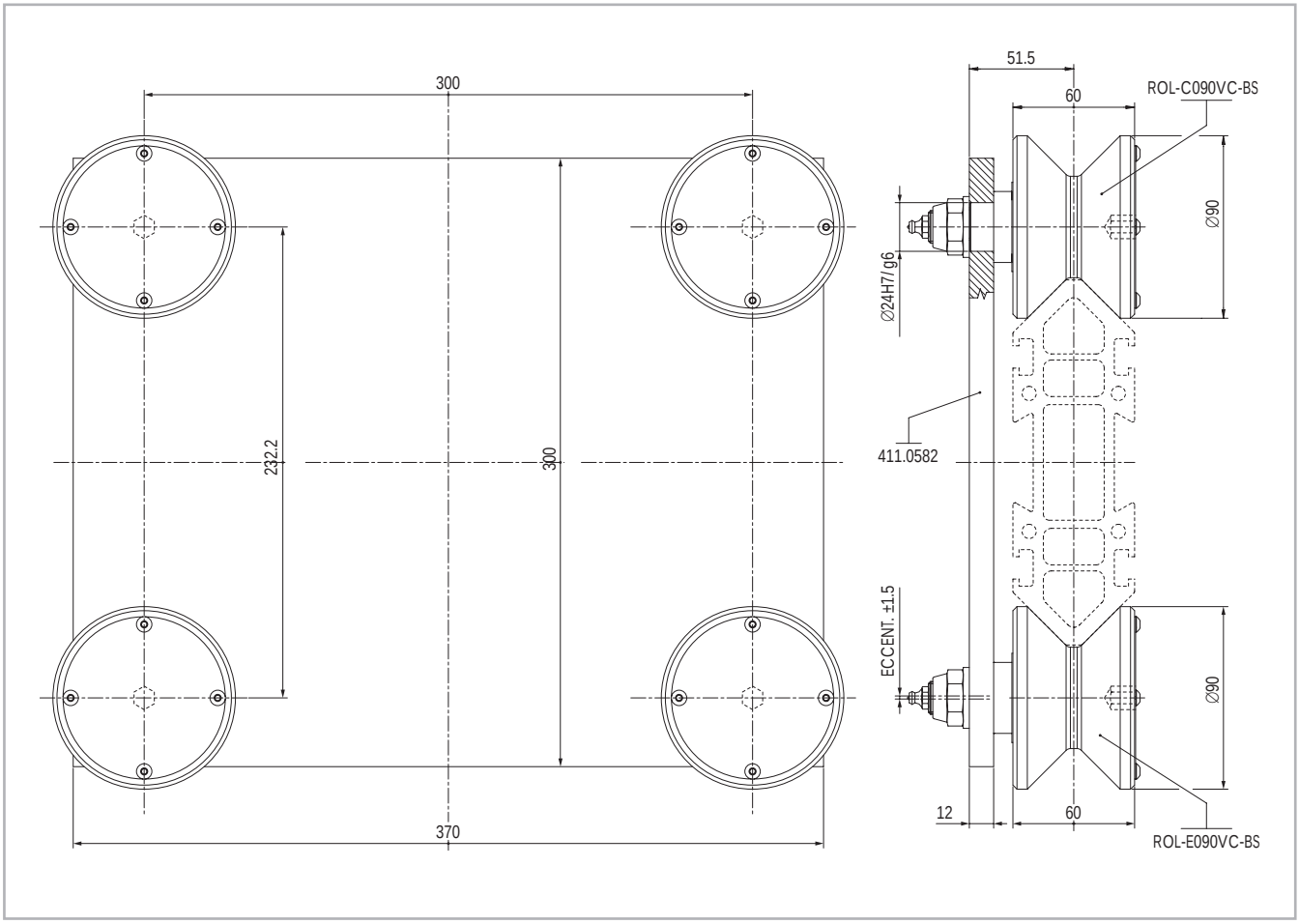

Fig. 142

55.1180
Heavy duty roller assembly with 4 rollers, two ROL-C090VC-BS and two ROLE090VC-BS.

Roller assembly with 4 rollers

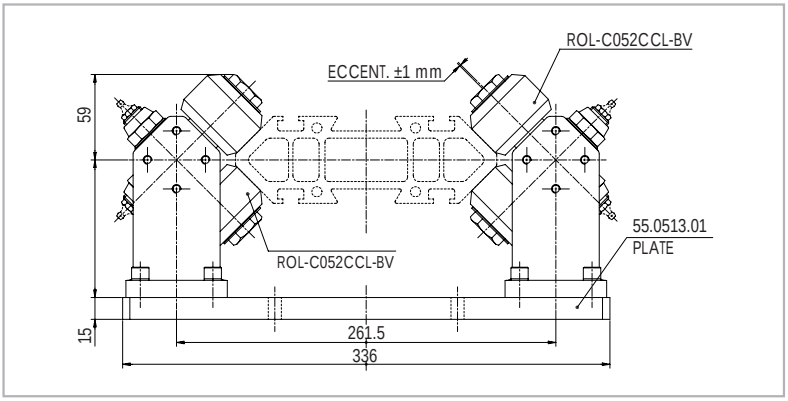

Fig. 143

55.0713
Roller assembly with backing plate 336x150x15 rollers with lifetime lubrication

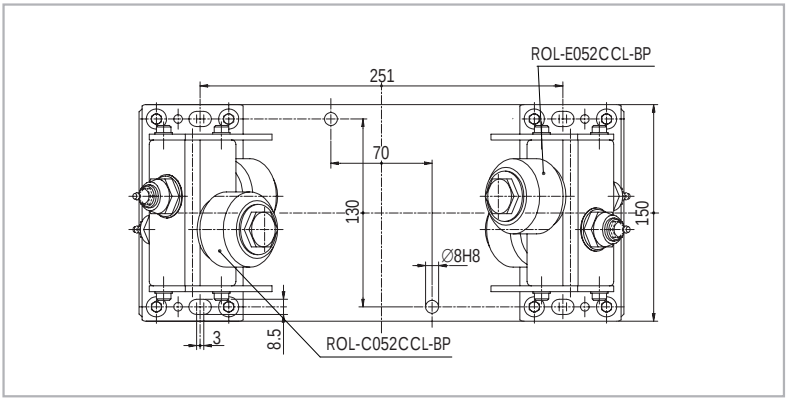

Fig. 144

55.0513
Roller assembly with backing plate 336x150x15 rollers with periodical lubrication

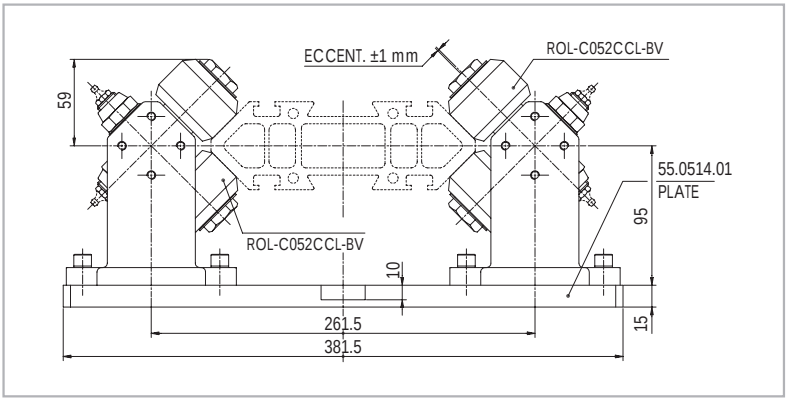

Fig. 145

55.0740
Roller assembly with backing plate 381.5x80x15 rollers with lifetime lubrication

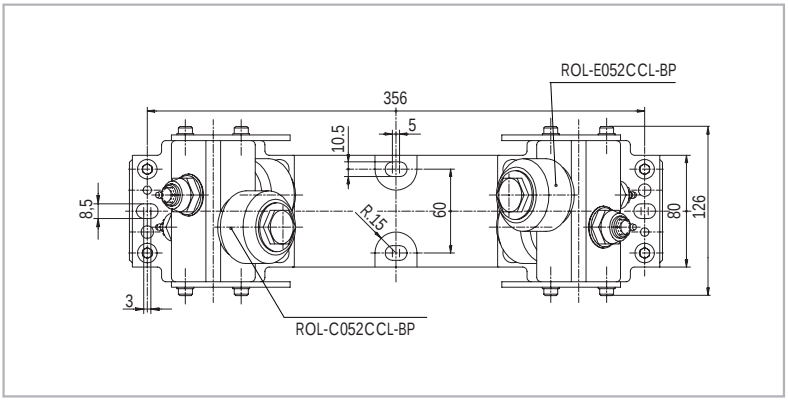

Fig. 146

55.0514
Roller assembly with backing plate 381.5x80x15 rollers with periodical lubrication

8 Rollers floating assembly - complete pairing

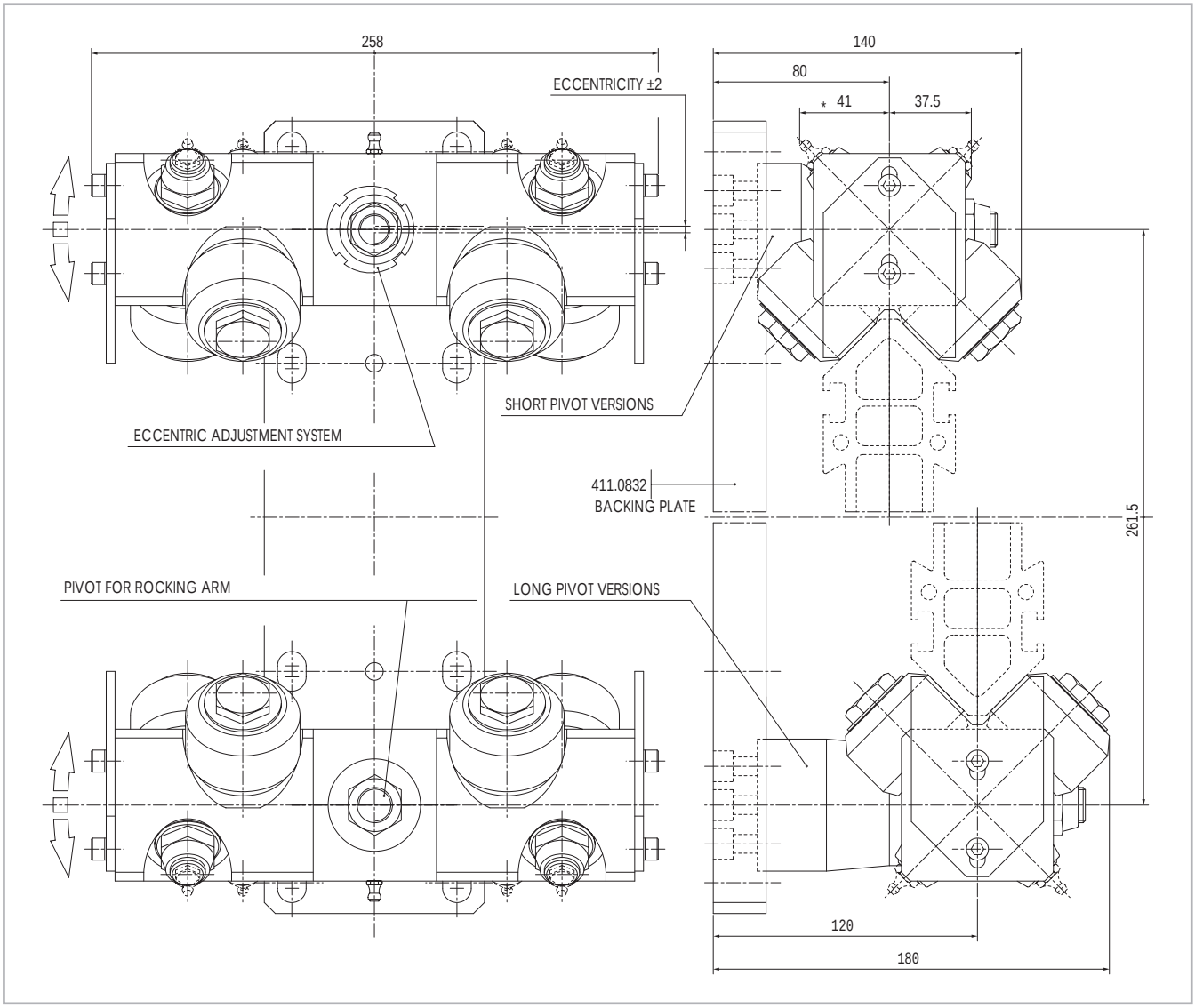

* Lubricator nipple mounted for periodic lubrication versions only

Fig. 147

Notes:

The complete pairing kit comes with one eccentric and one concentric roller assembly mounted on a backing plate. The concentric roller assembly should take the heavier load. For trolley on 2 parallel guides use on one guide axially free roller assemblies (± 4mm).

Pairing kits are available with two roller assemblies having the same number of rollers. For different combinations (i.e. upper assembly with 6 rollers and lower assembly with 4 rollers, two eccentric rollers assemblies) please order the assemblies separately, without baseplate and add the backing plate shown in this page. However we suggest to verify always with our technical department prior to ordering.

Pivot type	Lubrication type	Axially constrained	Axially free
Short pivot	Periodical	55.1380	55.3380
	Lifetime	55.1381	55.3381
Long pivot	Periodical	55.1382	55.3382
	Lifetime	55.1383	55.3383

Tab. 19

Backing plate for floating roller assemblies

Backing plate - Material: hard anodized aluminium alloy

411.0832

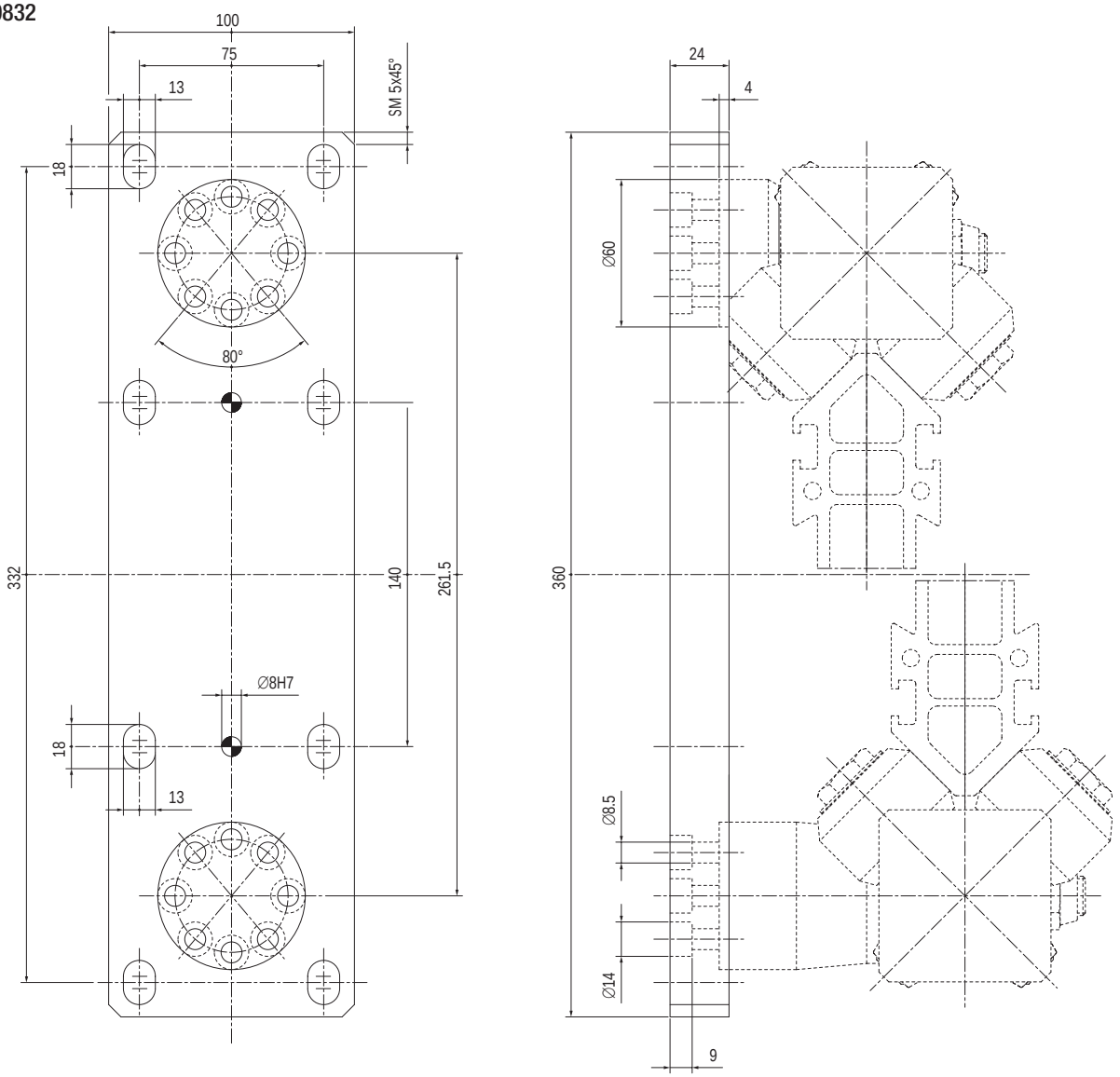

Fig. 148

Speedy Rail 250

Super wide body multi groove Speedy Rail guide and specifications

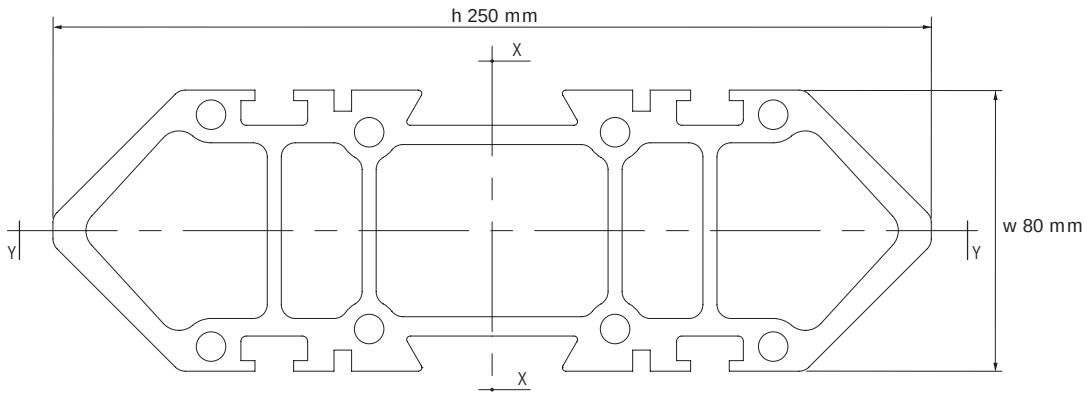

Fig. 149

Surface quadratic moment X-X axis = 27.345.460 mm4 / Y-Y axis = 4.120.150 mm4.

Max. manufacturing tolerances = ±0.65 mm across opposite rolling surfaces.

Max. angular distorsion = ±30'/m.

Linear mass = 15.20 Kg/m.

Max. linear distorsion = ±0.5 mm/m.

Standard lengths: 3000-3500-4000-4500-5000-5500-6000-6500-7000-7500 mm.

External surface: deep hard anodizing

Roller assemblies and components

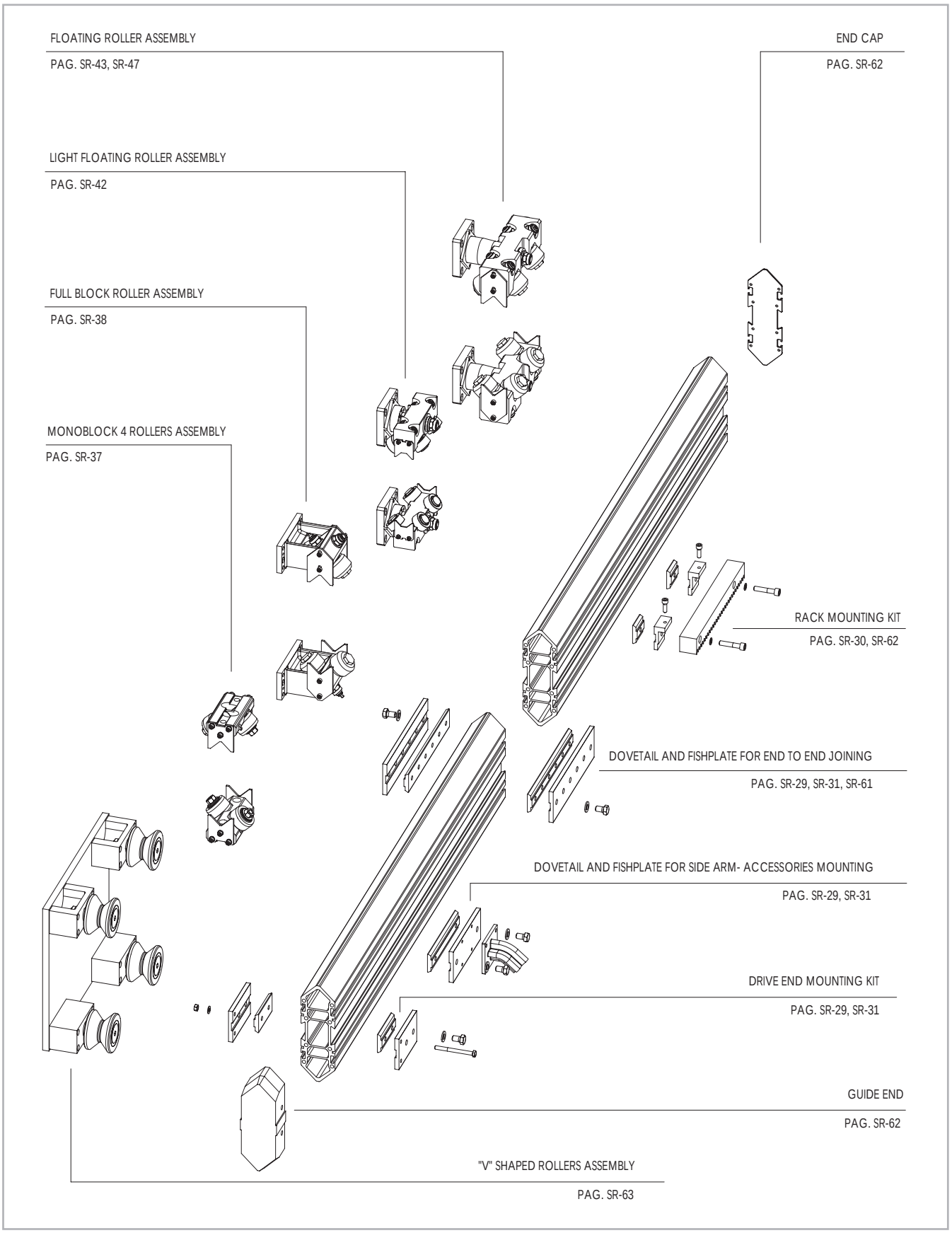

Fig. 150

Superwide body multi groove Speedy Rail guide and specifications

Speedy Rail 250 with plain ends: SR250-T
Speedy Rail 250 with drilled ends: SR250-F

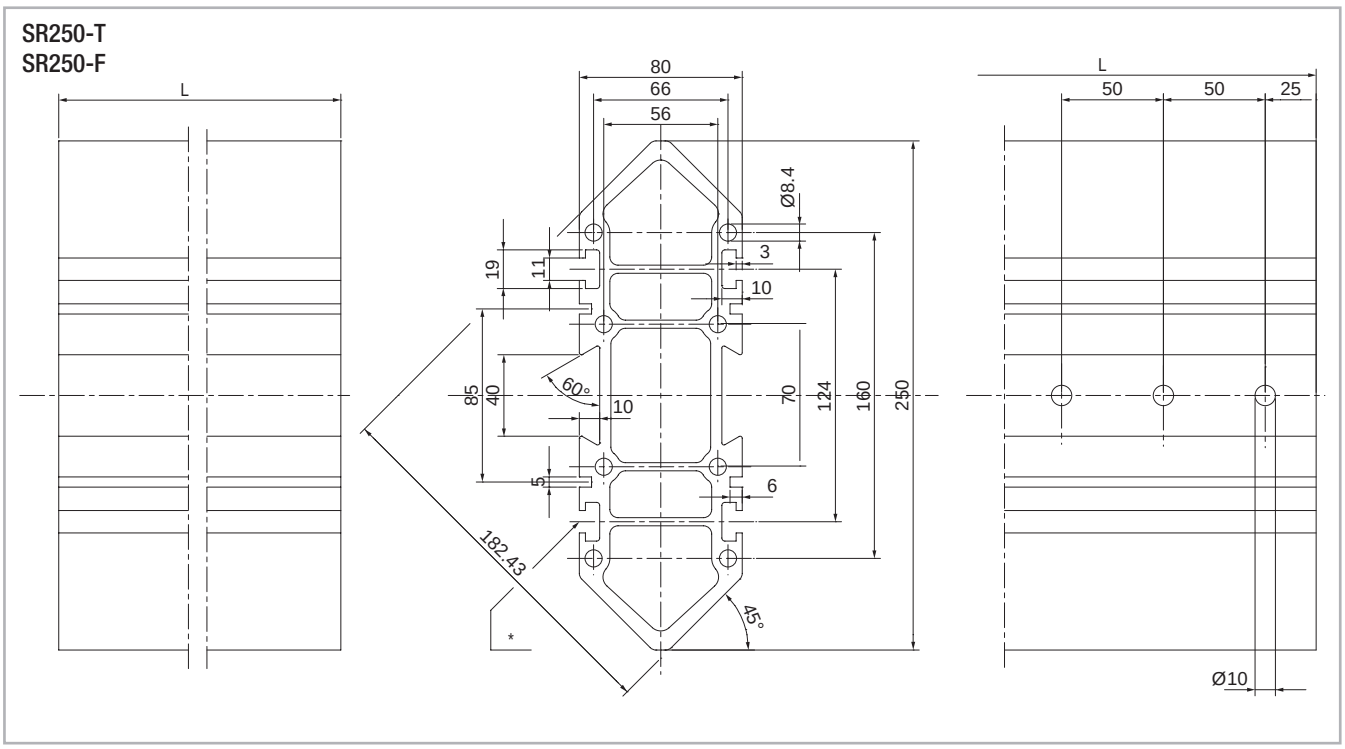

Fig. 151

Note:

Drillings on the bar end are required as a safety measure whith end-to-end joining in moving rails.

Super wide body multi groove speedy rail guide (SR250) uses the same dovetails, plates, fishplates and joining components of speedy rail standard (sr 120m section) see pages SR-29, SR-30, SR-31. Special plates, 411.0960, are also available for end-to-end joining in heavy duty applications.

* Particularly for side grooves the same inserts for SR180 (pag.SR-53) are used.

Steel fishplates for end to end joining

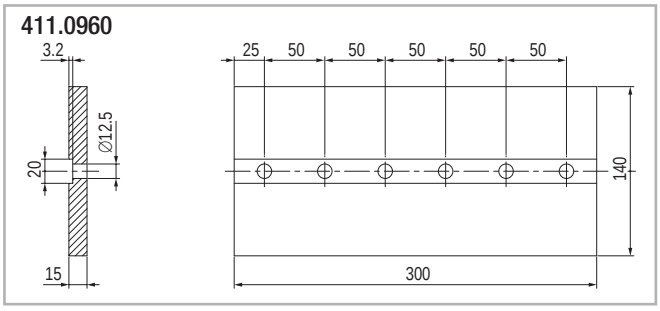

Fig. 152

Components for super wide body Speedy Rail guide

Aluminium alloy end cap

411.1963

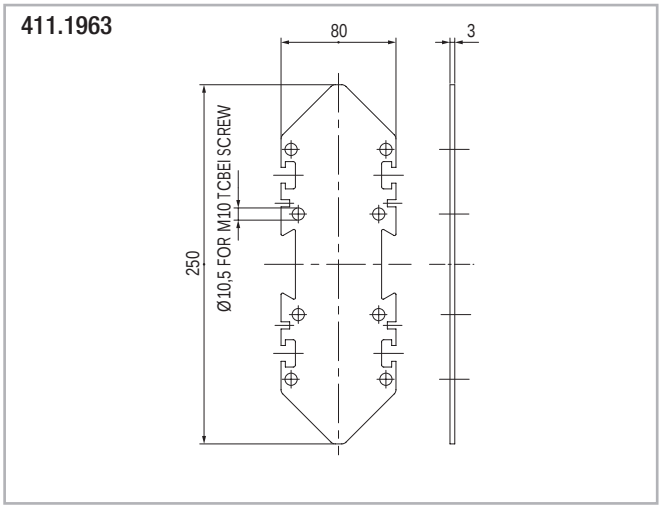

Fig. 153

Elastomer drive head

411.1015

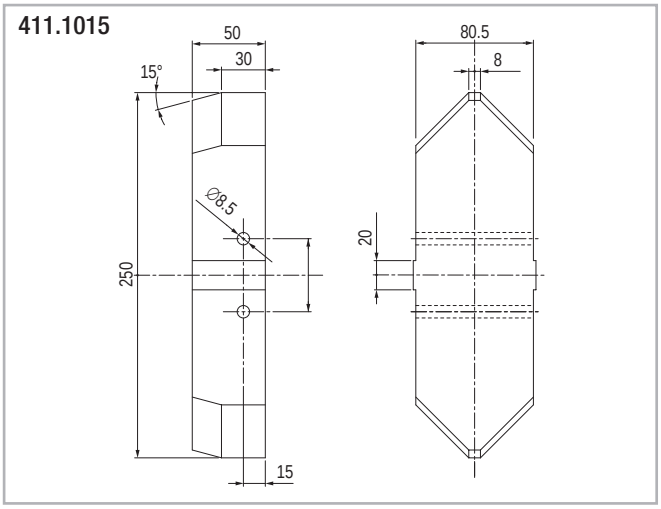

Fig. 154

Fishplate for m2 Rack mounting on, SR180, SR250 T grooves

411.1179

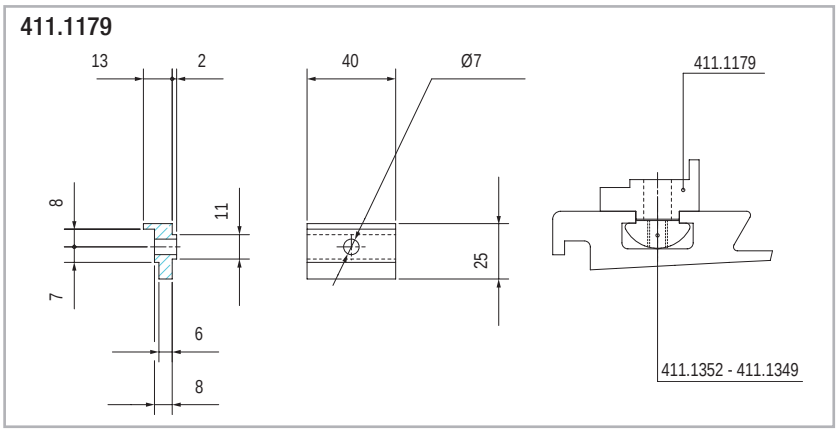

m2 straight toothed Fig. 155

For rack mounting plate m2 use insert 411.1352

Fishplate for m3 and m2 rack mounting on dovetail grooves

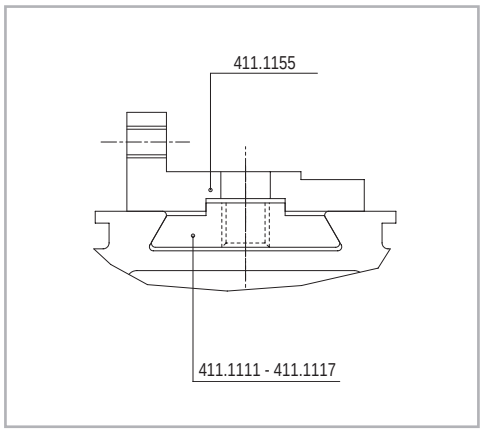

m3 and m4 Fig. 156

Roller assembly with "V" shaped rollers

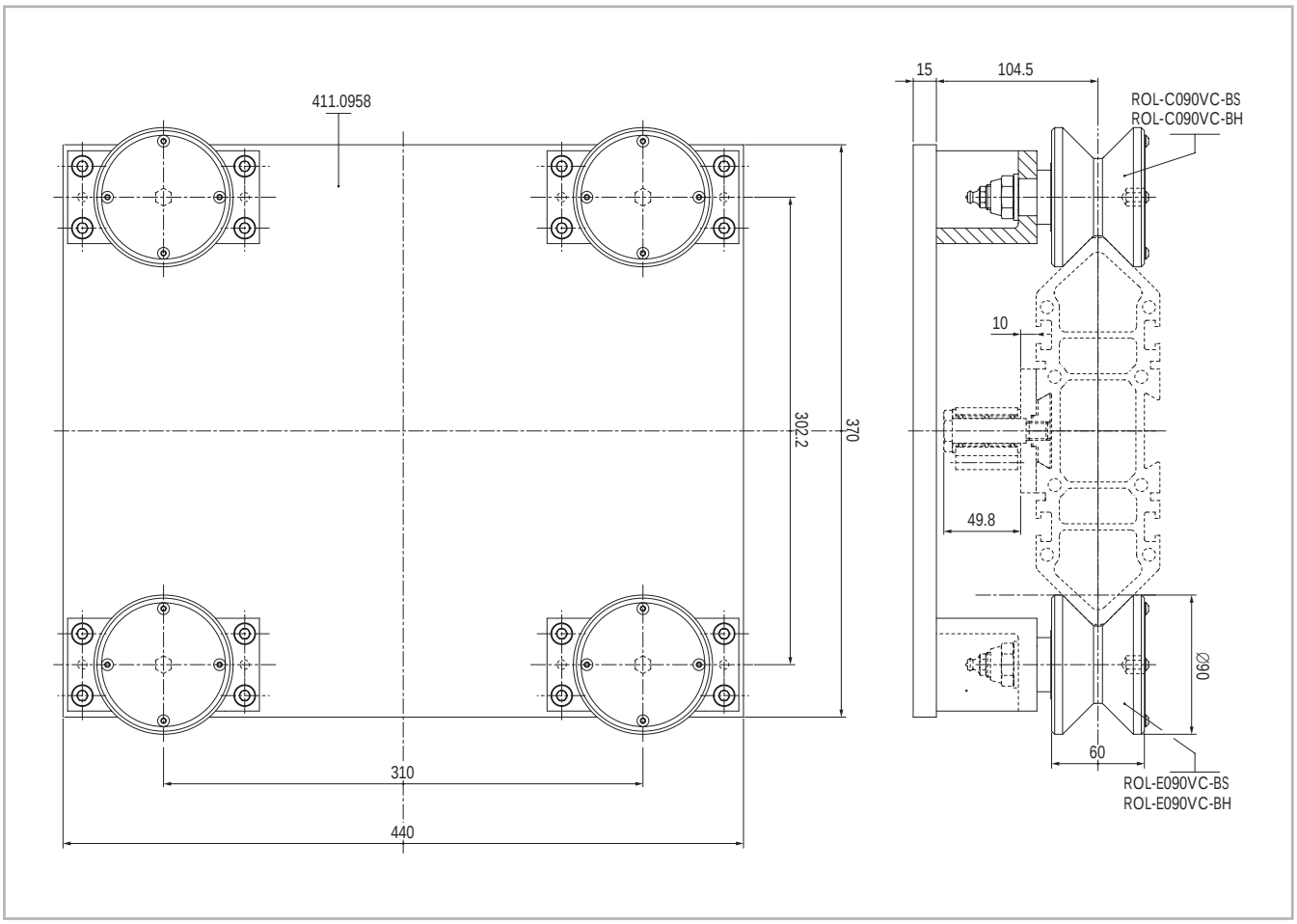

Fig. 157

55.0808
Roller assembly with 4 rollers, two ROL-C090VC-BS and two ROL-E090VC-BS

Technical detail

Mechanical and technological components specifications

Guides	Accessories	Material	Tensile strength
Speedy Rail SR 35 Speedy Rail SR C 48 Speedy Rail Mini SR 60 Speedy Rail Middle SR 90 Speedy Rail Standard SR 120 Speedy Rail Wide Body multiple grooves SR 180 Speedy Rail Super Wide Body Multiple Grooves SR 250	Dovetails Fishplates	Aluminum Aloy	Tensile strength: R = 245 N/mm^2 Yield stress: S = 195 N/mm^2 Elongation: 10% ÷ 13% Modulus of elasticity: E=70000 N/mm^2 G=26000 N/mm^2 Mass density: 2,7 kg/dm^3 Coefficient of expansion: K=23x10-6 mm/mm°C

Tab. 20

Components	Material	Tensile strength
Base plates Rocking arms Compact rollers assembly body	Aluminum Alloy	Tensile strength: R = 275 N/mm^2 Yield stress: S = 200 N/mm^2 Elongation: 10% ÷ 13% Modulus of elasticity: E=70000 N/mm^2 G=26000 N/mm^2 Mass density: 2,7 kg/dm^3
Monoblock roller assembly case Full-block roller assembly case		Tensile strength: R = 225 N/mm^2 Yield stress: S = 142 N/mm^2 Elongation: 3% ÷ 5% Modulus of elasticity: E=70000 N/mm^2 G=26000 N/mm^2 Mass density: 2,7 kg/dm^3

Tab. 21

Treatments on all light alloy components

Heat treatment	Age hardening
Surface treatment	Surface hardening: Low temperature deep anodizing to give a surface hardness of 600 ÷ 700 HV Surface layer depth: 50÷60 micron (0.050÷0.060 mm) for rails, 25÷35 micron (0.025÷0.035 mm) for supports bodies and plates. Chemical composition of surface layer: $Al_2 O_3$ Fusion temperature of surface layer: 2100° C Surface layer electric resistance at 20°C: $4x10^{15}$ Ohm/cm/cm^2 Dielectric constant: approx. 7.5 Puncture voltage of surface layer: 1500 V

Tab. 22

Rollers

Speedy Rail system

Rollers are manufactured with a steel shaft, high quality ball-needle bearings, rubber seals labyrinth.

The external surface of the roller is machined with a slightly convex profile, finished with a sintered plastic compound having the following properties:

Tensile strength:	85 N/mm^2
Rockwell hardness:	120 R
Melting point:	+ 220 °C
Max. continuous working temperature:	+80°C
Min. continuous working temperature:	- 20°C

Chemical resistance: excellent to mineral and organic oils; good to basic solutions; fairly good to acid solutions.

We always recommend a preliminary test for the rollers in the actual working environment.

Roller assemblies

Roller assemblies with four (4) rollers have the two inner rollers mounted on a plain, concentric sleeve while the outer ones have an eccentric sleeve. This setup allows the proper adjustments to compensate dimensional tolerances on the rail. Two roller assemblies have one roller with an eccentric sleeve and the other with a concentric setup.

Floating roller assemblies: all the rollers on this type of support have a concentric sleeve.

The adjustments are made possible by the pivot settings (hub), which comes either with an eccentric or concentric setup.

Custom configuration for roller assemblies are available upon request.

Rollers adjustments

Adjusting the rollers on a single section rail requires the rollers in a position that allows them to touch the running surface with no play - slightly pre-loaded- A different and more accurate setting is required when the runway is assembled with multiple sections.
The rollers setting must leave 0.15 ÷ 0.20 mm backslack (play) from the rail –Use a feeler gauge for best results- The setting requirement is determined by the dimensional tolerances on the rail sections.

Torque settings

Bolt purpose torque:

M6	(fixing scrapers)	10 Nm
M8	(fixing assemblies)	25 Nm
M10	(fixing assemblies)	45 Nm
M12	(dovetails & fishplates)	55 Nm
M16	(fixing rollers)	75 Nm

Drillings of the end bars:
this are made in order to create a security connection for two or more moving rails that have an end to end joining, through the shaft of the special screws that are used for fixing the fishplate and the dovetails. This additional connection is not a guarantee for the precision but has got the aim to avoid injuries in the case that the moving rails unhook.

Scrapers

Are manufactured from a sintered compound, self lubricating, having a low friction coefficient. All the roller assemblies come with the scrapers. The purpose of this item is to keep foreign bodies out of the rollers.
Scrapers shall never be set to slide on the rail.
They are equipped with mounting and adjustment holes so that a 0.2 mm minimum clearance can be applied.
For application environments with an excessive pollution or dust use the mobile brush assembly.

Drive head

For Speedy Rail profiles. Machined from a hard polymer rubber molding - Shore A hardness 90÷95 - Normally mounted on the bar ends when the system has a rail that moves in and out the roller assemblies. This rubber end piece allows the rail to be easily guided into the roller assemblies.

Lubrication

There is no need to lubricate our Speedy Rail profiles. It provides continuous lubrication and keeps the rail clean.
Rollers: standard rollers with regular maintenance/greasing schedule have its own grease nipple. Please use grade 3 grease for working temperature of 10°C÷60°C.
Grade 2 grease is required when the working temperature drop below 10°C. Lubricate every 5-6 months.
For the "lifetime" lubrication version, the rollers are supplied with a high tech grease.
The grease nipples are removed from the assemblies since this configuration does not require any periodic lubrication.

Life testing

Speedy rail and system with plastic shell rollers

The max applicable load, stated in the description of each roller of the Speedy Rail systems, is determined depending on the characteristics of the plastic compound shell. The cylindrical rollers of Speedy Rail system can be used with translation speed up to 15 metres/second and with accelerations and decelerations up to 10 metres/sec2. For Speedy Rail and Speedy Rail C 48 systems with "V" shaped and for Speddy Rail 35 plastic compound rollers, the max translation speed is of 8 metres/second while the max accelerations and decelerations are of 8 metres/sec2. For higher dynamics please contact our technical department. For all roller types the working temperature limits are -20°C and +80°C.
The rollers with plastic compound shell do not damage themselves and do not damage the rails where the invert direction, even in presence of high accelerations and decelerations. Speedy Rail C 48 and Speddy Rail 35 systems has good performance and excellent life even in presence of dust. With stresses on the rollers within the max values stated on the catalogue, the Speedy Rail C 48 and Speddy Rail 35 systems enable a life time of more than 80.000 km. The life can be lower due to excessive presence of dust or pollutants.

Summary table Speedy Rail guides

Profile type and code N°	Simple profiles mechanical and specifications	Surface quadratic moment I (X) mm4	Surface quadratic moment I (Y) mm4	Section modulus W (X) mm3:	Section modulus W (Y) mm3:	Section mm2	Distance d mm: (Roller contact axis)	Linear mass t kg/mt
SR 35 SIMP - T SIMP - F	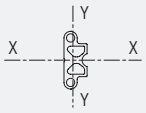	17.779	3.665	1016	118	203	/	0.60
SR C 48 CR48 - D CR48 - T CR48 - F	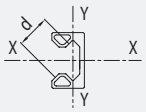	152.026	36.823	6334	2045	526	28.26	1.42
SR Mini (60) SR060 - T SR060 - F	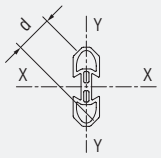	138.600	18.000	4.620	1.800	470	29	1,27
SR Middle (90) SR090 - T SR090 - F	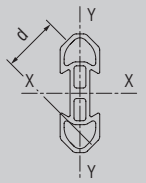	630.000	76.500	14.250	5.170	965	39,6	2,6
SR Standard (120) SR120 - T SR120 - F	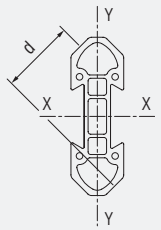	2.138.988	259.785	35.650	12.989	1.645	56,1	4,4
SR Wide Body (180) SR180 - T SR180 - F	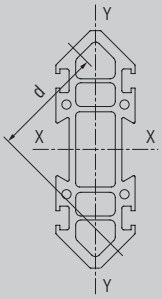	10.291.100	1.278.700	114.345	42.620	3.730	95,7	10,2
SR Super Wide body (Speedy Rail 250) SR250 - T SR250 - F	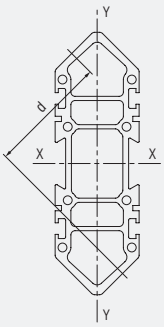	27.345.460	4.120.150	218.760	103.000	5.609	113.95	15.2

Tab. 23

Loads on a 4 'V' rollers trolley

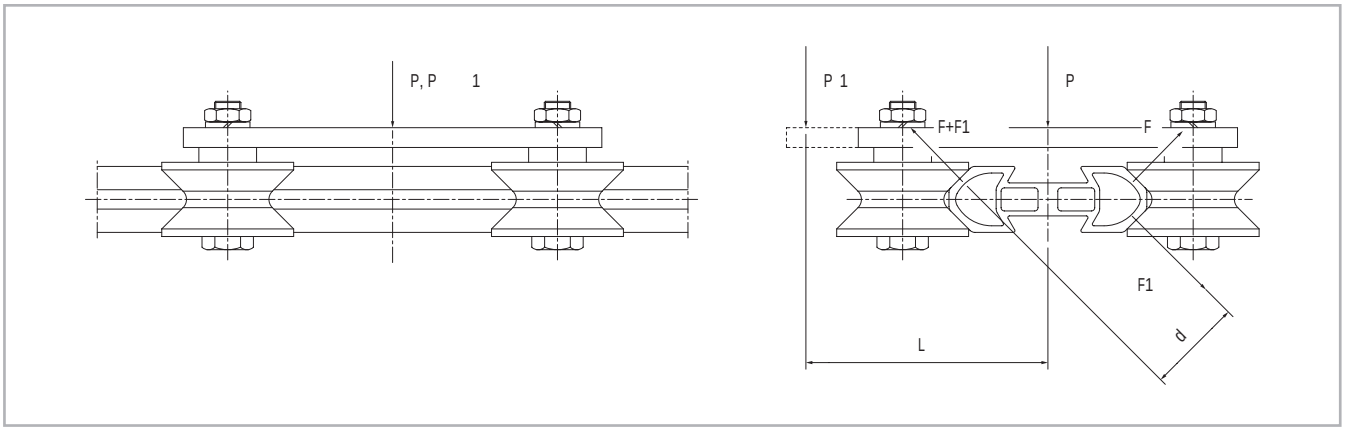

Fig. 158

Rollers load with force 'P' applied on the rail axle

$F = P \cdot \left(\frac{1}{2 \cdot \sqrt{2}}\right)$ (N)	$F_r = F_a = F \cdot \left(\frac{1}{\sqrt{2}}\right)$ (N)	P, P_1 = Applied forces (N) F_r = Radial load (N) F_a = Axial load (N)

Fig. 159

Rollers load with 'P_1' force applied at 'L' distance (mm) from rail centerline

$F = P_1 \cdot \left(\frac{1}{2 \cdot \sqrt{2}}\right)$ (N)	$F_1 = \frac{P_1 \cdot L}{2 \cdot d}$ (N)	$F_r = F_a = \frac{F+F_1}{\sqrt{2}}$ (N)	P, P_1 = Applied forces (N) F_r = Radial load (N) F_a = Axial load (N)

Fig. 160

Important: the load on most loaded rollers must be, for each roller type, less or equal to the corresponding rated load on the catalogue.

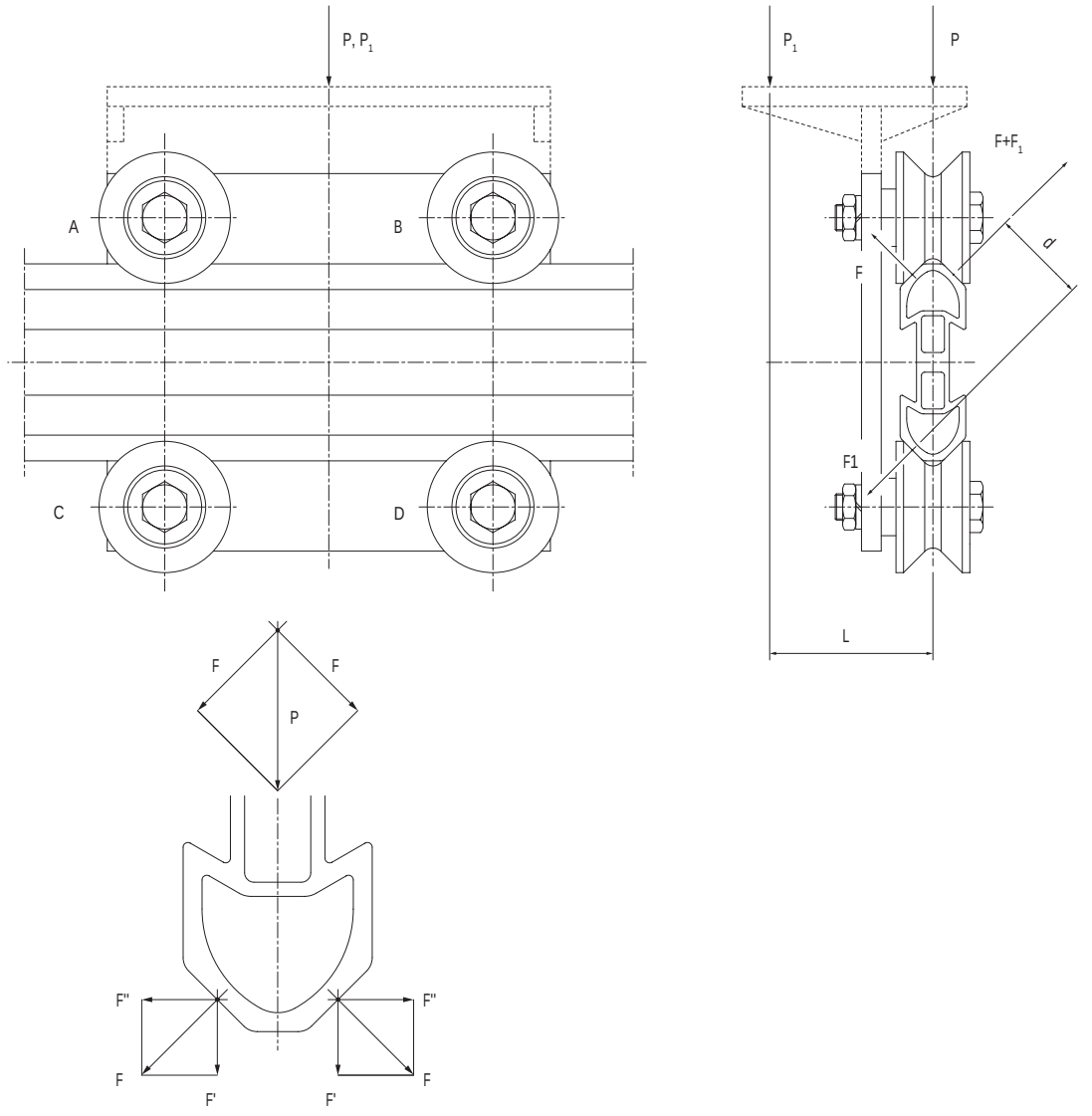

Fig. 161

$$F' = F'' = \frac{F}{\sqrt{2}}$$

A, B Concentric rollers
C, D Eccentric rollers
P, P_1 = Applied forces (N)
F_r = Radial load (N)
F_a = Axial load (N)

Fig. 162

Rollers load with force 'P' applied on the rail axle

$F_r = \frac{P}{2}$ (N)	$F_a = 0$ (N)	A, B Concentric rollers C, D Eccentric rollers P, P_1 = Applied forces (N) F_r = Radial load (N) F_a = Axial load (N)

Fig. 163

Rollers load with 'P_1' force applied at 'L' Distance (mm) from rail centerline

$F = P_1 \cdot \frac{1}{2 \cdot \sqrt{2}}$ (N)	$F_1 = \frac{P_1 \cdot L}{2 \cdot d}$ (N)	$F_r = \sqrt{2}\ F + \frac{F_1}{\sqrt{2}}$ (N)	$F_a = \frac{F_1}{\sqrt{2}}$ (N)	A, B Concentric rollers C, D Eccentric rollers P, P_1 = Applied forces (N) F_r = Radial load (N) F_a = Axial load (N)

Fig. 164

Important: the load on most loaded rollers must be, for each roller type, less or equal to the corresponding rated load on the catalogue.

Trolley on single rail horizontal

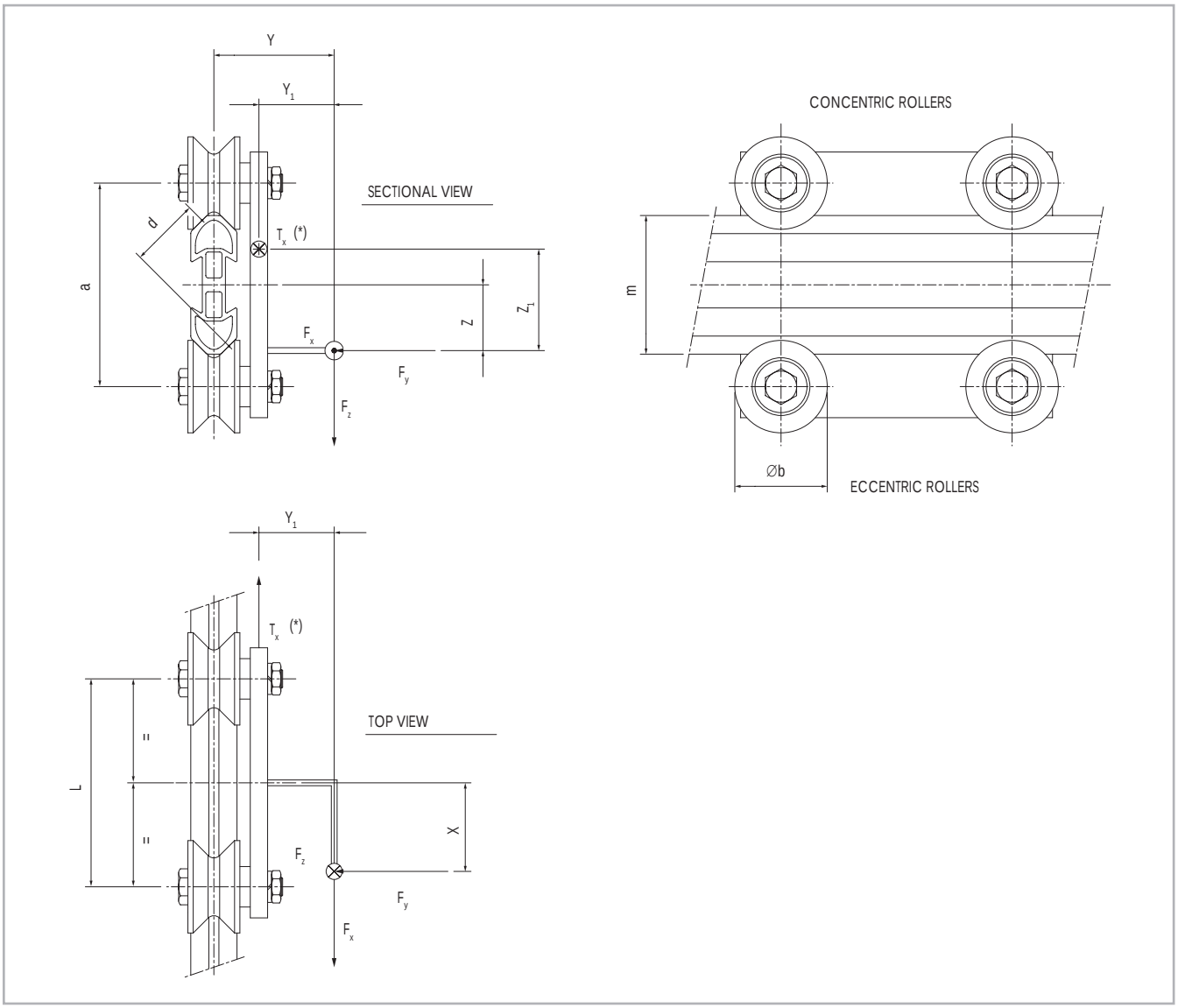

(*) Traction force (chain or belt) $T_x = F_x$

Fig. 165

The rollers with concentric sleeve are mounted where there is the highest load and the ones with eccentric sleeve on the opposite end.

All 'F' values must include the dynamic component obtained by:
Inertia force = mass (kg) x acceleration (mt/s^2).

Roller-guide load verification

$$F\ Ass \Rightarrow \frac{F_y}{4} + \frac{F_y \cdot X + F_x \cdot Y_1}{2 \cdot L} + \frac{F_z \cdot Y + F_y \cdot Z}{2 \cdot d \cdot 1.41}$$

$$F\ Rad \Rightarrow \frac{F_z}{2} + \frac{F_y}{4} + \frac{F_z \cdot X - F_x \cdot Z_1}{L} + \frac{F_z \cdot Y + F_y \cdot Z}{2 \cdot d \cdot 1.41}$$

Fig. 166

Important: the load on most loaded rollers must be, for each roller type, less or equal to the corresponding rated load on the catalogue.

Loads on twin 4 'V' rollers trolleys

Trolley on double rail horizontal

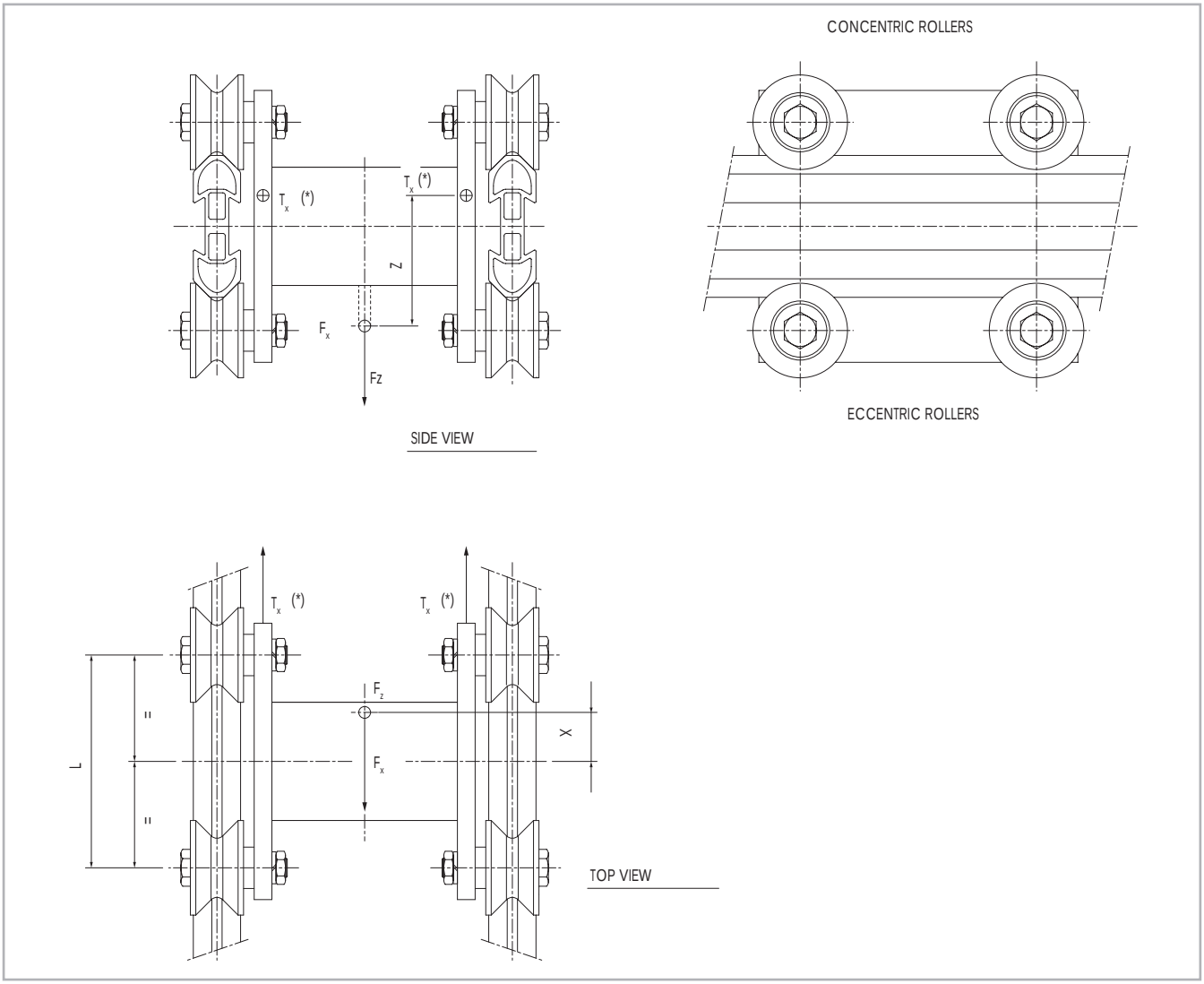

(*) Traction force (chain or belt) $T_x = F_x/2$

Fig. 167

When assembling lines with parallel rail and long strokes it would be wise to use axially-free roller assemblies on one of the rails in order to withstand minor misalignments due either to assembly or maintenance errors.

All 'F' values must include the dynamic component obtained by: Inertia Force = mass (kg) x acceleration (mt/s^2).

Roller-guide load verification

$$F\ Rad\ => \frac{F_z}{4} + \frac{F_x \cdot Z + F_z \cdot X}{2 \cdot L}$$

Fig. 168

Important: the load on most loaded rollers must be, for each roller type, less or equal to the corresponding rated load on the catalogue.

Loads on a 4 'V' rollers vertical trolley

Trolley on single vertical rail

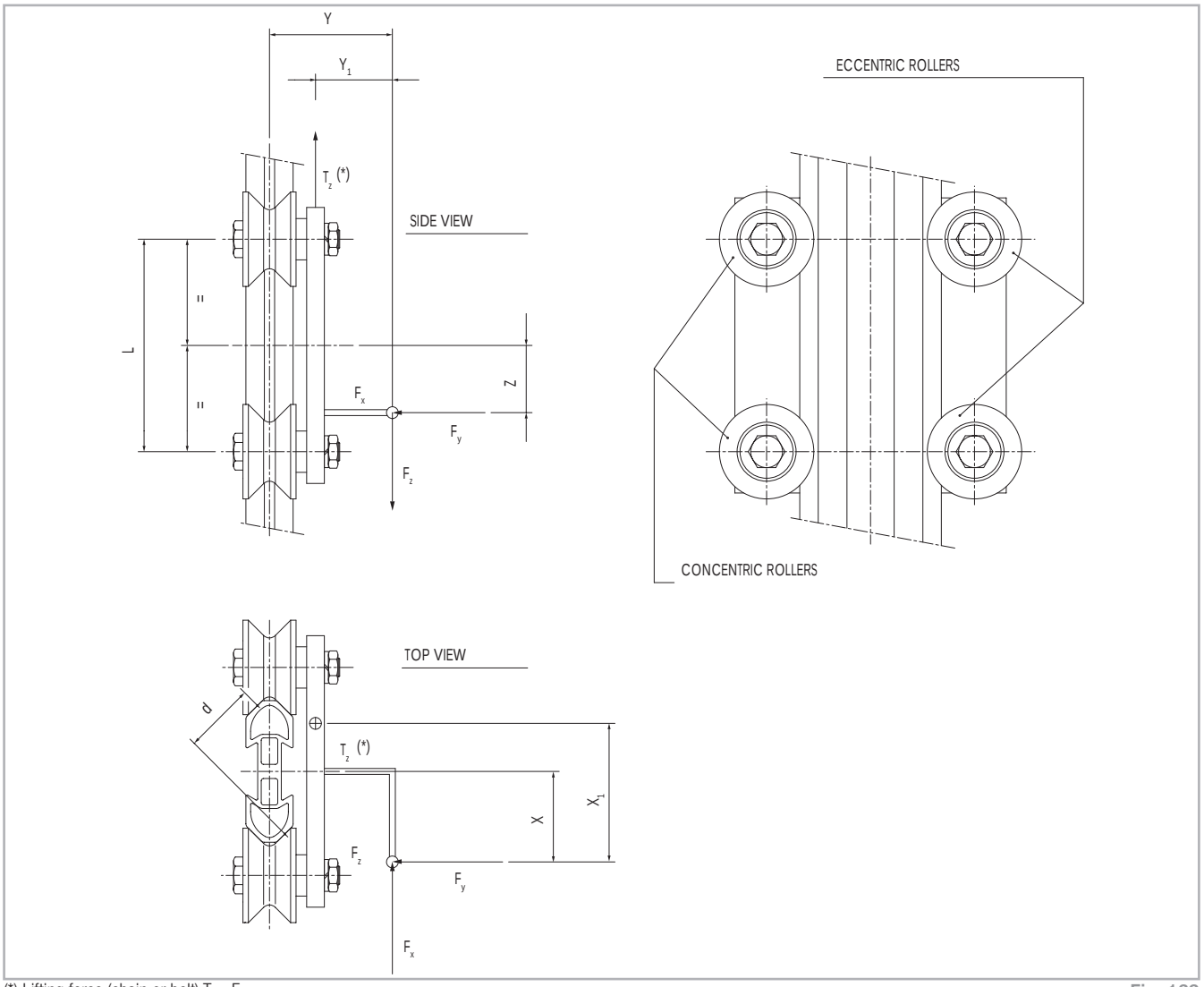

(*) Lifting force (chain or belt) $T_z = F_z$

Fig. 169

The rollers with concentric sleeve are mounted where there is the highest load and the ones with eccentric sleeve on the opposite end.

All 'F' values must include the dynamic component obtained by:
Inertia Force = mass (kg) x acceleration (mt/s^2).

Roller-guide load verification

$$F\ Ass \Rightarrow \frac{F_y}{4} + \frac{F_y \cdot Z + F_z \cdot Y_1}{2 \cdot L} + \frac{F_y \cdot X - F_x \cdot y}{2 \cdot d \cdot 1.41}$$

$$F\ Rad \Rightarrow \frac{F_z \cdot X_1 + F_x \cdot Z}{L} + \frac{F_x \cdot Y - F_y \cdot X}{2 \cdot d \cdot 1.41} + \frac{F_y}{4} + \frac{F_z}{2}$$

Fig. 170

Important: the load on most loaded rollers must be, for each roller type, less or equal to the corresponding rated load on the catalogue.

Cilindrical roller loads

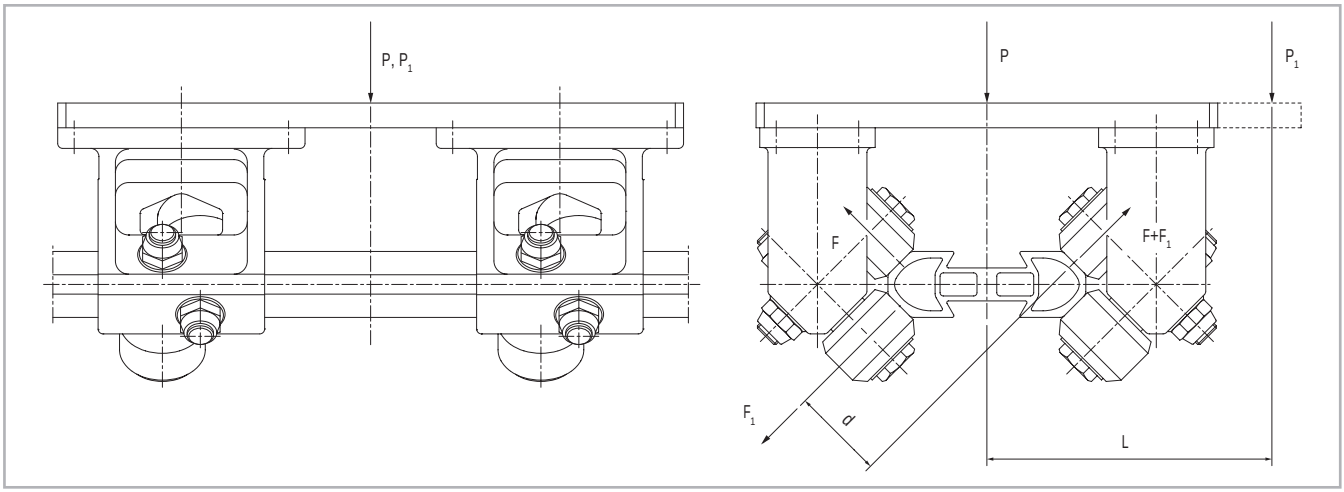

Fig. 171

Rollers load with 'P' force applied on the rail axle

$F = P \cdot (\frac{1}{2 \cdot \sqrt{2}})$ (N)	$F_1 = 0$ (N)	$F_r = F$ (N)	P, P_1 = Applied forces (N) F_r = Radial load (N)

Fig. 172

Rollers load with 'P_1' force applied at 'L' distance (mm) from rail centerline

$F = P_1 \cdot (\frac{1}{2 \cdot \sqrt{2}})$ (N)	$F_1 = \frac{P_1 \cdot L}{2 \cdot d}$ (N)	$F_r = F + F_1$ (N)	P, P_1 = Applied forces (N) F_r = Radial load (N)

Fig. 173

Important: the load on most loaded rollers must be, for each roller type, less or equal to the corresponding rated load on the catalogue.

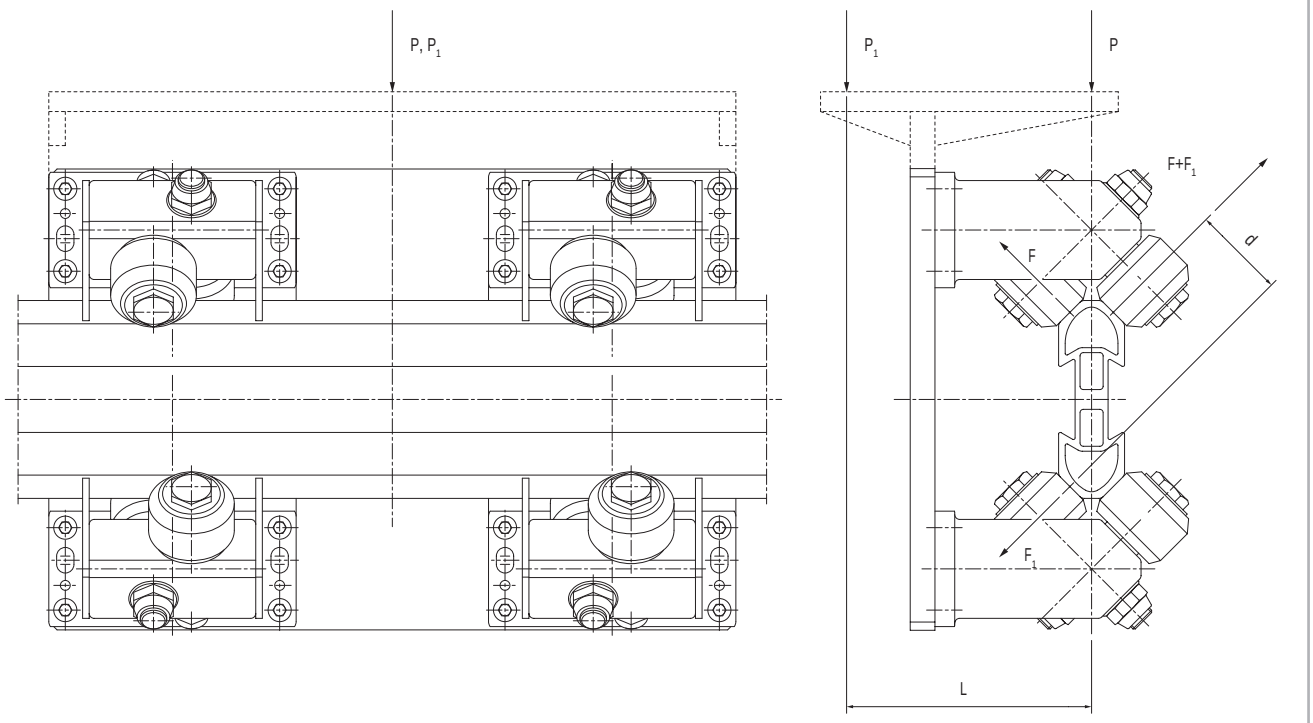

Fig. 174

Rollers load with 'P' force applied on the rail axle

$F = P \cdot (\frac{1}{2 \cdot \sqrt{2}})$ (N)	$F_1 = 0$ (N)	$F_r = F$ (N)	P, P_1 = Applied forces (N) F_r = Radial load (N)

Fig. 175

Rollers load with 'P' force applied at 'L' distance (mm) from rail centerline

$F = P \cdot (\frac{1}{2 \cdot \sqrt{2}})$ (N)	$F_1 = \frac{P \cdot L}{2 \cdot d}$ (N)	$F_r = F + F_1$ (N)	P, P_1 = Applied forces (N) F_r = Radial load (N)

Fig. 176

Important: the load on most loaded rollers must be, for each roller type, less or equal to the corresponding rated load on the catalogue.

Load capacities for C Rollers assemblies

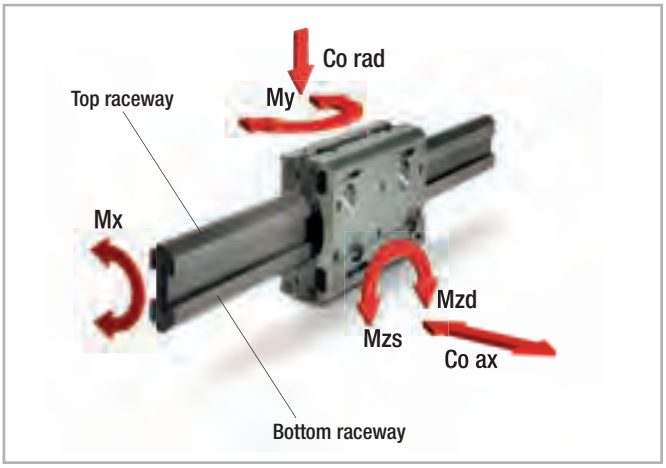

Fig. 177

Code	N° of rollers	Type of roller	Roller configuration*4	C_{orad} [N]	C_{oax} [N]	Mx*1 [Nm]			My*2 [Nm]	M_{zs}*3 [Nm]	M_{zd}*3 [Nm]
						SpeedyRail 120	SpeedyRail 180	SpeedyRail 250			
55.0222-FIL	8	ROL-C052CCC-BV ROL-E052CCC-BV	4+4	3620.4	3620.4	142.1	-	-	289.6	289.6	
55.0222-PAS	8	ROL-C052CCC-BV ROL-E052CCC-BV	4+4	3620.4	3620.4	142.1	-	-	289.6	289.6	
55.0323	4	ROL-C052CCL-BP ROL-E052CCL-BP	2+2	1810.2	1810.2	71.0	-	-	0.0	0.0	
55.0324	4	ROL-C052CCL-BP ROL-E052CCL-BP	2+2	1810.2	1810.2	71.0	-	-	0.0	0.0	
55.0325	2	ROL-C052CCL-BP ROL-E052CCL-BP	1+1	1810.2	905.1	71.0	123.0	185.9	0.0	0.0	
55.0411	4	ROL-C052CCC-BP ROL-E052CCC-BP	2+2	1810.2	1810.2	71.0	-	-	0.0	0.0	
55.0433	2	ROL-C052CCL-BP ROL-E052CCL-BP	1+1	1810.2	905.1	71.0	123.0	185.9	0.0	0.0	
55.0472-FIL	4	ROL-C052CCC-BP ROL-E052CCC-BP	2+2	1810.2	1810.2	71.0	-	-	0.0	0.0	
55.0472-PAS	4	ROL-C052CCC-BP ROL-E052CCC-BP	2+2	1810.2	1810.2	71.0	-	-	0.0	0.0	
55.0513	4	ROL-C052CCL-BP ROL-E052CCL-BP	2+2	1810.2	1810.2	-	123.0	-	0.0	0.0	
55.0514	4	ROL-C052CCL-BP ROL-E052CCL-BP	2+2	1810.2	1810.2	-	123.0	-	0.0	0.0	
55.0604	2	ROL-C052CCC-BP ROL-E052CCC-BP	1+1	1810.2	905.1	71.0	123.0	185.9	0.0	0.0	
55.0711	4	ROL-C052CCC-BV ROL-E052CCC-BV	2+2	1810.2	1810.2	71.0	-	-	0.0	0.0	
55.0713	4	ROL-C052CCL-BV ROL-E052CCL-BV	2+2	1810.2	1810.2	-	123.0	-	0.0	0.0	
55.0723	4	ROL-C052CCL-BV ROL-E052CCL-BV	2+2	1810.2	1810.2	71.0	-	-	0.0	0.0	
55.0724	4	ROL-C052CCL-BV ROL-E052CCL-BV	2+2	1810.2	1810.2	71.0	-	-	0.0	0.0	
55.0725	2	ROL-C052CCL-BV ROL-E052CCL-BV	1+1	1810.2	905.1	71.0	123.0	185.9	0.0	0.0	
55.0733	2	ROL-C052CCL-BV ROL-E052CCL-BV	1+1	1810.2	905.1	71.0	123.0	185.9	0.0	0.0	
55.0740	4	ROL-C052CCL-BV ROL-E052CCL-BV	2+2	1810.2	1810.2	-	123.0	-	0.0	0.0	

Tab. 24

*1 For sliders with rollers only on one raceway, the Mx moment refers to two sliders mounted on both opposite raceways of the rail.
*2 The My moment can only be applied with two sliders mounted on both opposite raceways of the rail.
Therefore, for sliders with rollers only on one raceway, the values in the table refer to two sliders.
*3 For sliders with rollers only on one raceway, the Mz moment refers to two sliders mounted on both opposite raceways of the rail.
*4 For sliders with rollers only on one raceway, the codes show the roller type on each side of the assembly.
For sliders with rollers on on both raceways of the rail, the codes show the roller type on the top raceway and the bottom raceway.

Code	N° of rollers	Type of roller	Roller configuration*4	C_{orad} [N]	C_{oax} [N]	Mx*1 [Nm]			My*2 [Nm]	M_{zs}*3 [Nm]	M_{zd}*3 [Nm]
						SpeedyRail 120	SpeedyRail 180	SpeedyRail 250			
55.0772-FIL	4	ROL-C052CCC-BV ROL-E052CCC-BV	2+2	1810.2	1810.2	71.0	-	-	0.0	0.0	
55.0772-PAS	4	ROL-C052CCC-BV ROL-E052CCC-BV	2+2	1810.2	1810.2	71.0	-	-	0.0	0.0	
55.0794	2	ROL-C052CCC-BV ROL-E052CCC-BV	1+1	1810.2	905.1	71.0	123.0	185.9	0.0	0.0	
55.0930	6	ROL-C052CCL-BP ROL-E052CCL-BP	3+3	5430.6	2715.3	213.1	369.0	557.7	597.4	644.4	
55.1135	5	ROL-C052CCL-BP ROL-E052CCL-BP	3+2	3620.4	1810.2	213.1	369.0	557.7	642.6	642.6	
55.1136	5	ROL-C052CCL-BV ROL-E052CCL-BV	3+2	3620.4	1810.2	213.1	369.0	557.7	642.6	642.6	
55.1143	8	ROL-C052CCL-BP ROL-E052CCL-BP	4+4	7240.8	3620.4	284.2	492.0	743.6	0.0	0.0	
55.1144	8	ROL-C052CCL-BP ROL-E052CCL-BP	4+4	7240.8	3620.4	284.2	492.0	743.6	0.0	0.0	
55.1145	8	ROL-C052CCL-BV ROL-E052CCL-BV	4+4	7240.8	3620.4	284.2	492.0	743.6	0.0	0.0	
55.1146	8	ROL-C052CCL-BV ROL-E052CCL-BV	4+4	7240.8	3620.4	284.2	492.0	743.6	0.0	0.0	
55.1147	8	ROL-C052CCL-BP ROL-E052CCL-BP	4+4	7240.8	3620.4	284.2	492.0	743.6	0.0	0.0	
55.1148	8	ROL-C052CCL-BP ROL-E052CCL-BP	4+4	7240.8	3620.4	284.2	492.0	743.6	0.0	0.0	
55.1149	8	ROL-C052CCL-BV ROL-E052CCL-BV	4+4	7240.8	3620.4	284.2	492.0	743.6	0.0	0.0	
55.1150	8	ROL-C052CCL-BV ROL-E052CCL-BV	4+4	7240.8	3620.4	284.2	492.0	743.6	0.0	0.0	
55.1350	4	ROL-C052CCL-BV ROL-E052CCL-BV	2+2	3620.4	1810.2	142.1	246.0	371.8	0.0	0.0	
55.1351	4	ROL-C052CCL-BV ROL-E052CCL-BV	2+2	3620.4	1810.2	142.1	246.0	371.8	0.0	0.0	
55.1354	4	ROL-C052CCL-BV ROL-E052CCL-BV	2+2	3620.4	1810.2	142.1	246.0	371.8	0.0	0.0	
55.1355	4	ROL-C052CCL-BV ROL-E052CCL-BV	2+2	3620.4	1810.2	142.1	246.0	371.8	0.0	0.0	
55.1358	4	ROL-C052CCL-BV ROL-E052CCL-BV	2+2	3620.4	0.0	0.0	0.0	0.0	0.0	0.0	
55.1359	4	ROL-C052CCL-BV ROL-E052CCL-BV	2+2	3620.4	0.0	0.0	0.0	0.0	0.0	0.0	
55.1361	4	ROL-C052CCL-BP ROL-E052CCL-BP	2+2	3620.4	1810.2	142.1	246.0	371.8	0.0	0.0	
55.1363	4	ROL-C052CCL-BP ROL-E052CCL-BP	2+2	3620.4	1810.2	142.1	246.0	371.8	0.0	0.0	
55.1364	4	ROL-C052CCL-BP ROL-E052CCL-BP	2+2	3620.4	1810.2	142.1	246.0	371.8	0.0	0.0	
55.1365	4	ROL-C052CCL-BP ROL-E052CCL-BP	2+2	3620.4	1810.2	142.1	246.0	371.8	0.0	0.0	
55.1366	6	ROL-C052CCL-BP ROL-E052CCL-BP	4+2	3620.4	1810.2	142.1	246.0	371.8	0.0	0.0	
55.1367	6	ROL-C052CCL-BV ROL-E052CCL-BV	4+2	3620.4	1810.2	284.2	492.0	743.6	0.0	0.0	
55.1368	6	ROL-C052CCL-BP ROL-E052CCL-BP	4+2	3620.4	1810.2	284.2	492.0	743.6	0.0	0.0	
55.1369	6	ROL-C052CCL-BV ROL-E052CCL-BV	4+2	3620.4	1810.2	284.2	492.0	743.6	0.0	0.0	
55.1370	6	ROL-C052CCL-BP ROL-E052CCL-BP	4+2	3620.4	1810.2	284.2	492.0	743.6	0.0	0.0	

*1 For sliders with rollers only on one raceway, the Mx moment refers to two sliders mounted on both opposite raceways of the rail.
*2 The My moment can only be applied with two sliders mounted on both opposite raceways of the rail.
Therefore, for sliders with rollers only on one raceway, the values in the table refer to two sliders.
*3 For sliders with rollers only on one raceway, the Mz moment refers to two sliders mounted on both opposite raceways of the rail.
*4 For sliders with rollers only on one raceway, the codes show the roller type on each side of the assembly.
For sliders with rollers on on both raceways of the rail, the codes show the roller type on the top raceway and the bottom raceway.

Tab. 25

Code	N° of rollers	Type of roller	Roller configuration*4	C_{orad} [N]	C_{oax} [N]	Mx*1 [Nm]			My*2 [Nm]	M_{zs}*3 [Nm]	M_{zd}*3 [Nm]
						SpeedyRail 120	SpeedyRail 180	SpeedyRail 250			
55.1371	6	ROL-C052CCL-BV ROL-E052CCL-BV	4+2	3620.4	1810.2	284.2	492.0	743.6	0.0	0.0	
55.1372	6	ROL-C052CCL-BP ROL-E052CCL-BP	4+2	3620.4	1810.2	284.2	492.0	743.6	0.0	0.0	
55.1373	6	ROL-C052CCL-BV ROL-E052CCL-BV	4+2	3620.4	1810.2	284.2	492.0	743.6	0.0	0.0	
55.1380	8	ROL-C052CCL-BP ROL-E052CCL-BP	4+4	3620.4	3620.4	-	246.0	-	0.0	0.0	
55.1381	8	ROL-C052CCL-BV ROL-E052CCL-BV	4+4	3620.4	3620.4	-	246.0	-	0.0	0.0	
55.1382	8	ROL-C052CCL-BP ROL-E052CCL-BP	4+4	3620.4	3620.4	-	246.0	-	0.0	0.0	
55.1383	8	ROL-C052CCL-BV ROL-E052CCL-BV	4+4	3620.4	3620.4	-	246.0	-	0.0	0.0	
55.1419	6	ROL-C052CCL-BP ROL-E052CCL-BP	4+2	3620.4	1810.2	284.2	492.0	743.6	0.0	0.0	
55.1420	6	ROL-C052CCL-BP ROL-E052CCL-BP	4+2	3620.4	1810.2	284.2	492.0	743.6	0.0	0.0	
55.1421	6	ROL-C052CCL-BV ROL-E052CCL-BV	4+2	3620.4	1810.2	284.2	492.0	743.6	0.0	0.0	
55.1422	6	ROL-C052CCL-BV ROL-E052CCL-BV	4+2	3620.4	1810.2	284.2	492.0	743.6	0.0	0.0	
55.1423	6	ROL-C052CCL-BP ROL-E052CCL-BP	4+2	3620.4	1810.2	284.2	492.0	743.6	0.0	0.0	
55.1424	6	ROL-C052CCL-BP ROL-E052CCL-BP	4+2	3620.4	1810.2	284.2	492.0	743.6	0.0	0.0	
55.1425	6	ROL-C052CCL-BV ROL-E052CCL-BV	4+2	3620.4	1810.2	284.2	492.0	743.6	0.0	0.0	
55.1426	6	ROL-C052CCL-BV ROL-E052CCL-BV	4+2	3620.4	1810.2	284.2	492.0	743.6	0.0	0.0	
55.1550	2	ROL-C040CC-BP	1+1	1244.5	622.3	48.8	84.6	127.8	0.0	0.0	
55.1555	4	ROL-C040CC-BV	2+2	2489.0	1244.5	97.7	169.1	255.6	0.0	0.0	
55.1556	4	ROL-C040CC-BV	2+2	2489.0	1244.5	97.7	169.1	255.6	0.0	0.0	
55.1565	4	ROL-C040CC-BP	2+2	2489.0	1244.5	97.7	169.1	255.6	0.0	0.0	
55.1566	4	ROL-C040CC-BP	2+2	2489.0	1244.5	97.7	169.1	255.6	0.0	0.0	
55.1570	2	ROL-C040CC-BV	1+1	1244.5	622.3	48.8	84.6	127.8	0.0	0.0	
55.3143	8	ROL-C052CCL-BP ROL-E052CCL-BP	4+4	7240.8	0.0	0.0	0.0	0.0	0.0	0.0	
55.3144	8	ROL-C052CCL-BP ROL-E052CCL-BP	4+4	7240.8	0.0	0.0	0.0	0.0	0.0	0.0	
55.3145	8	ROL-C052CCL-BV ROL-E052CCL-BV	4+4	7240.8	0.0	0.0	0.0	0.0	0.0	0.0	
55.3146	8	ROL-C052CCL-BV ROL-E052CCL-BV	4+4	7240.8	0.0	0.0	0.0	0.0	0.0	0.0	
55.3147	8	ROL-C052CCL-BP ROL-E052CCL-BP	4+4	7240.8	0.0	0.0	0.0	0.0	0.0	0.0	
55.3148	8	ROL-C052CCL-BP ROL-E052CCL-BP	4+4	7240.8	0.0	0.0	0.0	0.0	0.0	0.0	
55.3149	8	ROL-C052CCL-BV ROL-E052CCL-BV	4+4	7240.8	0.0	0.0	0.0	0.0	0.0	0.0	
55.3150	8	ROL-C052CCL-BV ROL-E052CCL-BV	4+4	7240.8	0.0	0.0	0.0	0.0	0.0	0.0	

*1 For sliders with rollers only on one raceway, the Mx moment refers to two sliders mounted on both opposite raceways of the rail.
*2 The My moment can only be applied with two sliders mounted on both opposite raceways of the rail.
Therefore, for sliders with rollers only on one raceway, the values in the table refer to two sliders.
*3 For sliders with rollers only on one raceway, the Mz moment refers to two sliders mounted on both opposite raceways of the rail.
*4 For sliders with rollers only on one raceway, the codes show the roller type on each side of the assembly.
For sliders with rollers on on both raceways of the rail, the codes show the roller type on the top raceway and the bottom raceway.

Tab. 26

Code	N° of rollers	Type of roller	Roller configuration*4	C_{orad} [N]	C_{oax} [N]	Mx*1 [Nm]			My*2 [Nm]	M_{zs}*3 [Nm]	M_{zd}*3 [Nm]
						SpeedyRail 120	SpeedyRail 180	SpeedyRail 250			
55.3350	4	ROL-C052CCL-BV ROL-E052CCL-BV	2+2	3620.4	0.0	0.0	0.0	0.0	0.0	0.0	
55.3351	4	ROL-C052CCL-BV ROL-E052CCL-BV	2+2	3620.4	0.0	0.0	0.0	0.0	0.0	0.0	
55.3361	4	ROL-C052CCL-BP ROL-E052CCL-BP	2+2	3620.4	0.0	0.0	0.0	0.0	0.0	0.0	
55.3363	4	ROL-C052CCL-BP ROL-E052CCL-BP	2+2	3620.4	0.0	0.0	0.0	0.0	0.0	0.0	
55.3364	4	ROL-C052CCL-BP ROL-E052CCL-BP	2+2	3620.4	0.0	0.0	0.0	0.0	0.0	0.0	
55.3365	4	ROL-C052CCL-BP ROL-E052CCL-BP	2+2	3620.4	0.0	0.0	0.0	0.0	0.0	0.0	
55.3366	6	ROL-C052CCL-BP ROL-E052CCL-BP	4+2	3620.4	0.0	0.0	0.0	0.0	0.0	0.0	
55.3367	6	ROL-C052CCL-BV ROL-E052CCL-BV	4+2	3620.4	0.0	0.0	0.0	0.0	0.0	0.0	
55.3368	6	ROL-C052CCL-BP ROL-E052CCL-BP	4+2	3620.4	0.0	0.0	0.0	0.0	0.0	0.0	
55.3369	6	ROL-C052CCL-BV ROL-E052CCL-BV	4+2	3620.4	0.0	0.0	0.0	0.0	0.0	0.0	
55.3370	6	ROL-C052CCL-BP ROL-E052CCL-BP	4+2	3620.4	0.0	0.0	0.0	0.0	0.0	0.0	
55.3371	6	ROL-C052CCL-BV ROL-E052CCL-BV	4+2	3620.4	0.0	0.0	0.0	0.0	0.0	0.0	
55.3372	6	ROL-C052CCL-BP ROL-E052CCL-BP	4+2	3620.4	0.0	0.0	0.0	0.0	0.0	0.0	
55.3373	6	ROL-C052CCL-BV ROL-E052CCL-BV	4+2	3620.4	0.0	0.0	0.0	0.0	0.0	0.0	
55.3380	8	ROL-C052CCL-BP ROL-E052CCL-BP	4+4	3620.4	0.0	-	0.0	-	0.0	0.0	
55.3381	8	ROL-C052CCL-BV ROL-E052CCL-BV	4+4	3620.4	0.0	-	0.0	-	0.0	0.0	
55.3382	8	ROL-C052CCL-BP ROL-E052CCL-BP	4+4	3620.4	0.0	-	0.0	-	0.0	0.0	
55.3383	8	ROL-C052CCL-BV ROL-E052CCL-BV	4+4	3620.4	0.0	-	0.0	-	0.0	0.0	
55.3419	6	ROL-C052CCL-BP ROL-E052CCL-BP	4+2	3620.4	0.0	0.0	0.0	0.0	0.0	0.0	
55.3420	6	ROL-C052CCL-BP ROL-E052CCL-BP	4+2	3620.4	0.0	0.0	0.0	0.0	0.0	0.0	
55.3421	6	ROL-C052CCL-BV ROL-E052CCL-BV	4+2	3620.4	0.0	0.0	0.0	0.0	0.0	0.0	
55.3422	6	ROL-C052CCL-BV ROL-E052CCL-BV	4+2	3620.4	0.0	0.0	0.0	0.0	0.0	0.0	
55.3423	6	ROL-C052CCL-BP ROL-E052CCL-BP	4+2	3620.4	0.0	0.0	0.0	0.0	0.0	0.0	
55.3424	6	ROL-C052CCL-BP ROL-E052CCL-BP	4+2	3620.4	0.0	0.0	0.0	0.0	0.0	0.0	
55.3425	6	ROL-C052CCL-BV ROL-E052CCL-BV	4+2	3620.4	0.0	0.0	0.0	0.0	0.0	0.0	
55.3426	6	ROL-C052CCL-BV ROL-E052CCL-BV	4+2	3620.4	0.0	0.0	0.0	0.0	0.0	0.0	
55.3553	4	ROL-C040CC-BV	2+2	2489.0	0.0	0.0	0.0	0.0	0.0	0.0	
55.3554	4	ROL-C040CC-BV	2+2	2489.0	0.0	0.0	0.0	0.0	0.0	0.0	
55.3563	4	ROL-C040CC-BP	2+2	2489.0	0.0	0.0	0.0	0.0	0.0	0.0	
55.3564	4	ROL-C040CC-BP	2+2	2489.0	0.0	0.0	0.0	0.0	0.0	0.0	

*1 For sliders with rollers only on one raceway, the Mx moment refers to two sliders mounted on both opposite raceways of the rail.
*2 The My moment can only be applied with two sliders mounted on both opposite raceways of the rail.
Therefore, for sliders with rollers only on one raceway, the values in the table refer to two sliders.
*3 For sliders with rollers only on one raceway, the Mz moment refers to two sliders mounted on both opposite raceways of the rail.
*4 For sliders with rollers only on one raceway, the codes show the roller type on each side of the assembly.
For sliders with rollers on on both raceways of the rail, the codes show the roller type on the top raceway and the bottom raceway.

Tab. 27

Load capacities for V Rollers assemblies

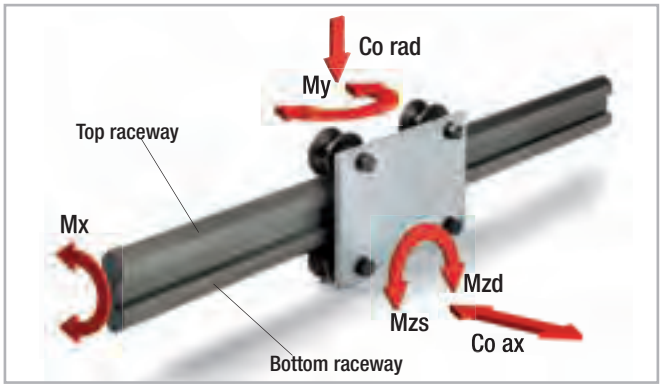

Fig. 178

Code	N° of rollers	Type of roller	Roller configuration*4	C_{orad} [N]	C_{oax} [N]	Mx*1 [Nm]	My*2 [Nm]	M_{zs} *3 [Nm]	M_{zd} *3 [Nm]	Rail type
55.0372	3	ROL-C032VC-B ROL-E032VC-B	2+1	540	220	4.9	10.0	13.5		Speedy Rail 60
55.0375	4	ROL-C032VC-B ROL-E032VC-B	2+2	540	400	9.8	20.0	27.0		Speedy Rail 60
55.0557	4	ROL-C080VC-B ROL-E080VC-B	2+2	1400	800	34.7	100.0	175.0		Speedy Rail 120
55.0558	4	ROL-C080VC-BR ROL-E080VC-BR	2+2	2000	1600	69.4	200.0	250.0		Speedy Rail 120
55.0605	3	ROL-C050VC-B ROL-E050VC-B	2+1	800	220	4.3	12.0	24.0		Speedy Rail 60
55.0606	4	ROL-C050VC-B ROL-E050VC-B	2+2	800	400	8.7	24.0	48.0		Speedy Rail 60
55.0636	4	ROL-C080VC-BVA ROL-E080VC-BVA	2+2	2000	0	0.0	0.0	250.0		Speedy Rail 120
55.0665	3	ROL-C062VC-B ROL-E062VC-B	2+1	900	330	10.6	24.0	36.0		Speedy Rail 90
55.0666	4	ROL-C062VC-B ROL-E062VC-B	2+2	900	600	21.2	48.0	72.0		Speedy Rail 90
55.0759	3	ROL-C062VC-BH ROL-E062VC-BR	2+1	1400	616	19.8	44.8	56.0		Speedy Rail 90
55.0760	4	ROL-C062VC-BH ROL-E062VC-BR	2+2	1400	1120	39.5	89.6	112.0		Speedy Rail 90
55.0808	4	ROL-C090VC-BS ROL-E090VC-BS	2+2	2300	2600	261.4	403.0	356.5		Speedy Rail 250
55.0831	4	ROL-C062VC-BA ROL-E062VC-BA	2+2	1400	0	0.0	0.0	112.0		Speedy Rail 90
55.1060	3	ROL-C031WC-X ROL-E031WC-B	2+1	540	220	3.4	7.0	9.5		Speedy Rail C 48
55.1062 *4	1	ROL-C031WC-X	1	270	100	0.0	0.0	0.0		Speedy Rail C 48
55.1064	4	ROL-C031WC-X ROL-E031WC-B	2+2	643	220	3.4	10.5	18.9	9.5	Speedy Rail C 48
55.1065	1	ROL-E031VC-BA	1	270	0	0.0	0.0	0.0		Speedy Rail C 48
55.1066	1	ROL-C031VC-XA	1	270	0	0.0	0.0	0.0		Speedy Rail C 48
55.1067 *4	1	ROL-E031WC-B	1	270	100	0.0	0.0	0.0		Speedy Rail C 48
55.1069	4	ROL-C031WC-X ROL-E031WC-B	2+2	540	400	6.8	10.5	18.9		Speedy Rail C 48
55.1180	4	ROL-C090VC-BS ROL-E090VC-BS	2+2	2300	2600	170.5	390.0	345.0		Speedy Rail 180

Tab. 28

*1 For sliders with rollers only on one raceway, the Mx moment refers to two sliders mounted on both opposite raceways of the rail.
*2 The My moment can only be applied with two sliders mounted on both opposite raceways of the rail.
Therefore, for sliders with rollers only on one raceway, the values in the table refer to two sliders.
*3 For sliders with rollers only on one raceway, the Mz moment refers to two sliders mounted on both opposite raceways of the rail.
*4 Being a single bearing configuration axial load applies if more than one slider is assembled in the rail to avoid bearing movement.

User suggestions

When and how to use speedy rail:

When a linear transfer system requires one or more of the following features:

- Lightweight
- Quiet
- Resistant to dust and chemical agents
- Easy to assemble
- Interchangeable

How:

The **Speedy Rail®** beam moves within fixed roller assemblies.
The lightness of the beam offers power and energy cost-savings, increasing the acceleration and speed. Side arm and/or manipulators can be fitted on the moving beam.

The **Speedy Rail®** beam is static and the roller assemblies, connected to a frame, are moving. Either with a static or moving beam, the movement can be realized through several means such as rack-pivot coupling, belts, chain, pneumatic or hydraulic cylinder. For preassembled modular units will you please refer to the catalogue of Rollon modules and portals.

Calculations data:

Important calculation factors to consider:
1) Maximum beam deflection under the load action
2) Maximum roller stress

1) Elastic deflection

Usually in a transfer system the deformations derived from elastic deflection are not a disturbing element.

2) Roller stress

Considering a roller assembly with two cylindric plastic compound rollers, the maximum load on the highest stressed roller should not exceed 128 daN. With the following formula it's possible to calculate the load on the most stressed roller.

$$F = \frac{P.a}{d} + \frac{P}{\sqrt{2}}$$

If the value is more than 128 daN, it will be necessary to provide either more supports or only one self-aligning roller assembly with 8 - 10 or 12 rollers, so than the "F" value, divided by the number of rollers on the specified point of application will be equal or less than 128 daN.
Compared to steel beams and roller assemblies, the **Speedy Rail®** surface treatment and plastic compound shells on the rollers allows the utilization of Rollon components in high speed and high accelerations systems. These benefits remove typical damages due to wear normally present in metal to metal sliding situations. When building a system with one single segment of **Speedy Rail®** section, it is possible to slightly pre-load the rollers.

Do not pre-load rollers on a system with a rail composed of 2 or more segments.

Power required to drive a trolley or bar

The following calculations are true in a system without overloads generated either by misalignement or an incorrect assembly. The following sliding friction factors are approximate with excess.

Terminology and dimensional units

M [kg]	moving mass
n_r	number of moving rollers
$C_r = 100$ Nmm	internal max resisting torque for each roller
a [m/s^2]	moving mass acceleration
g [m/s^2]	gravity acceleration
$f_{cc} = 0.05$	drive resisting coefficient of plastic compound rollers
$f_{vc} = 0.065$	drive resisting coefficient of 'V' shaped plastic compound rollers
F [N]	drive resisting force
V [m/s]	max traverse speed
N [W]	power
d [mm]	average roller diameter

Calculations

traverse

resisting force	$F = Ma + Mgf + \frac{2 n_r C_r}{d}$	max power	$N = F\ V$

Fig. 179

vertical lift

resisting force	$F = Ma + Mg(1+f) + \frac{2 n_r C_r}{d}$	max power	$N = F\ V$

Fig. 180

Thermal expansion of profiles, simple and compound

All profiles specifications are located on pages SR-64.

Terminology and dimensional units

$K_1 = 23x10^{-6}$ 1/°C	light alloy linear thermal expansion coefficient
D_t [°C]	temperature variation in comparison with the assembling
A_1 [mm2]	light alloy profile section
L [mm]	rail length
D_1 [mm]	rail length variation

Calculations

light alloy rails

$$D_1 = K_1 \times D_t \times L$$

Applications

Rails for sliding doors

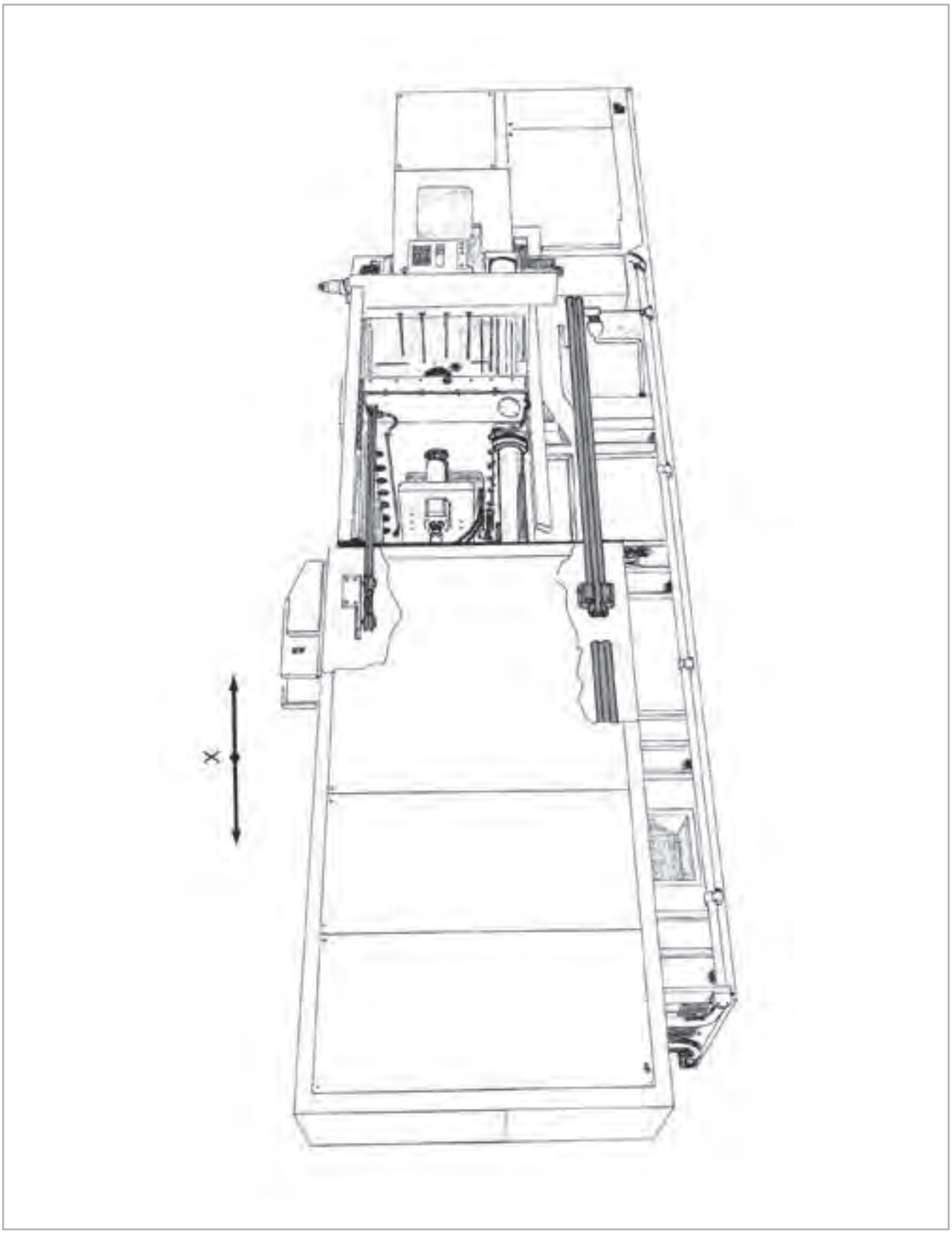

Glass sheet manipulator

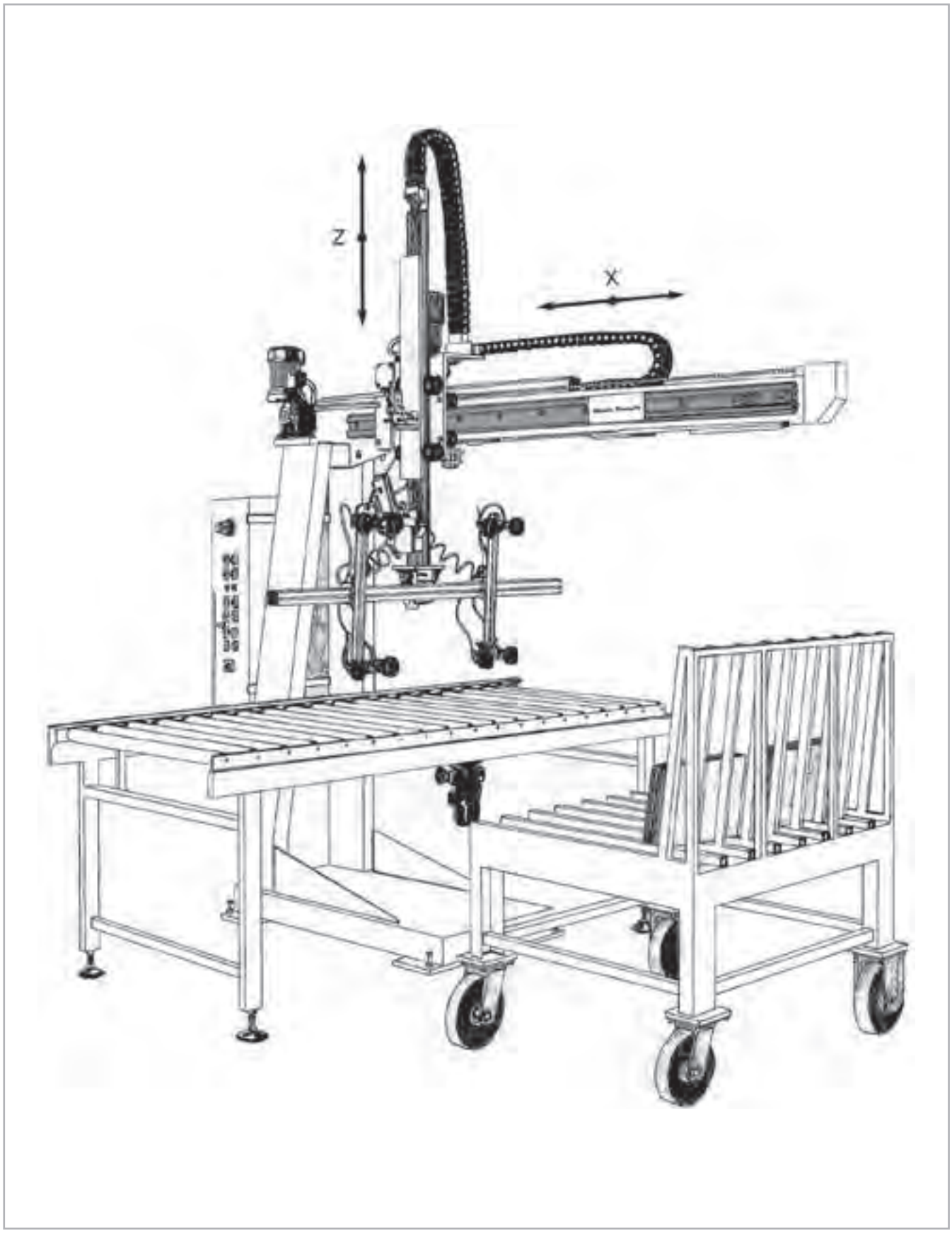

Automatic press feeder

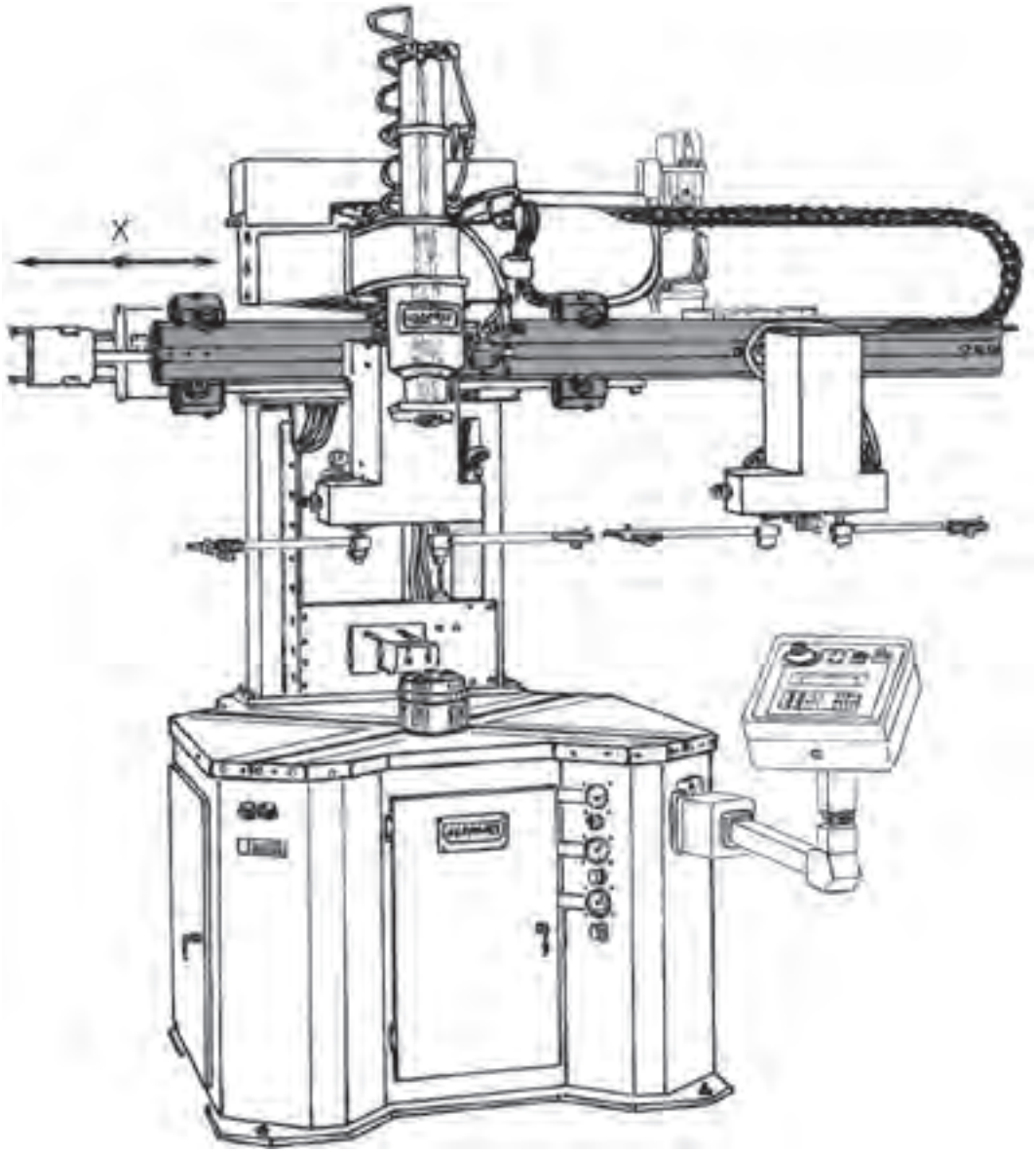

Automated oven feeder - tile production

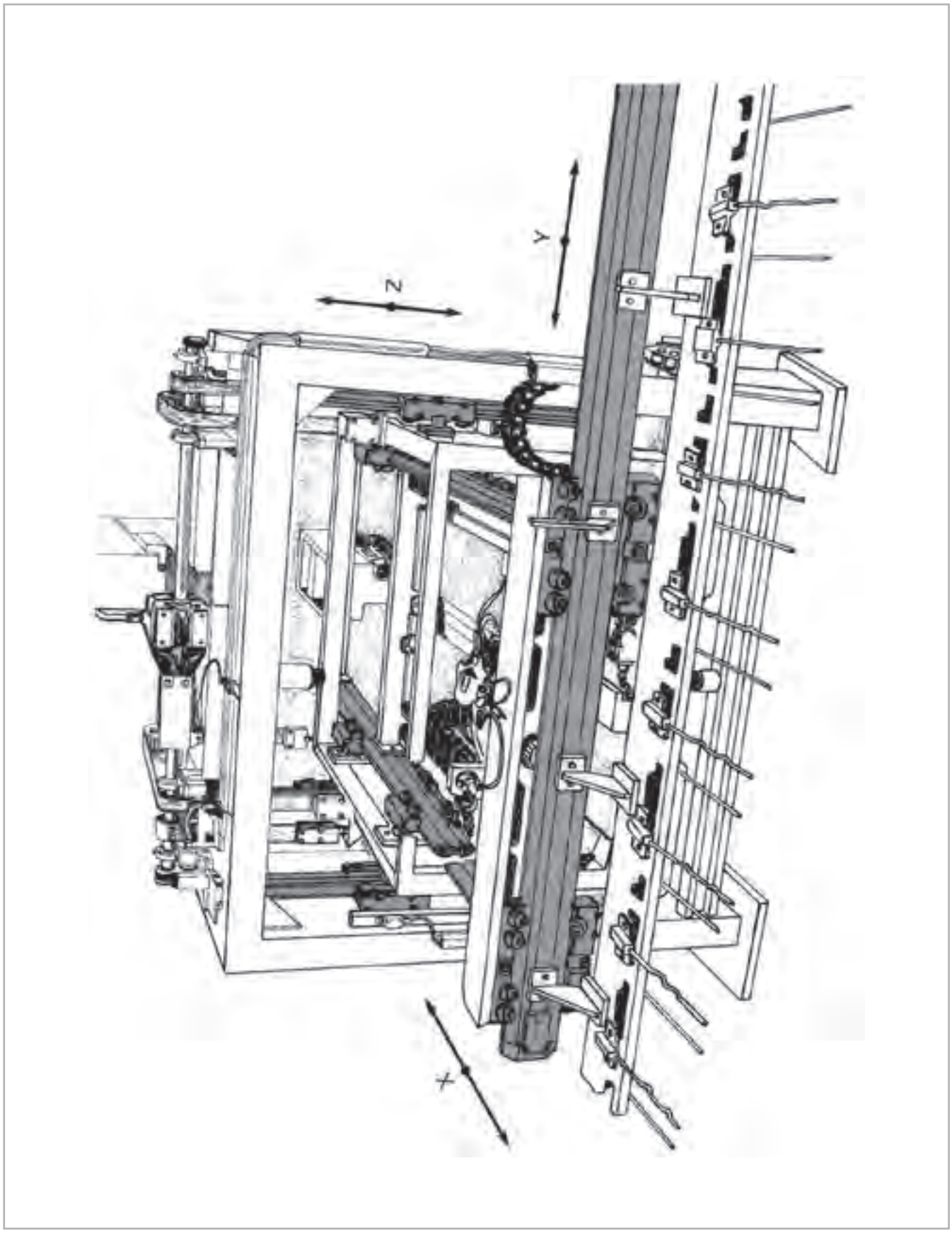

Speedy Rail SR180 and plastic compound cylindric rollers in enviroment with strong presence of impurities

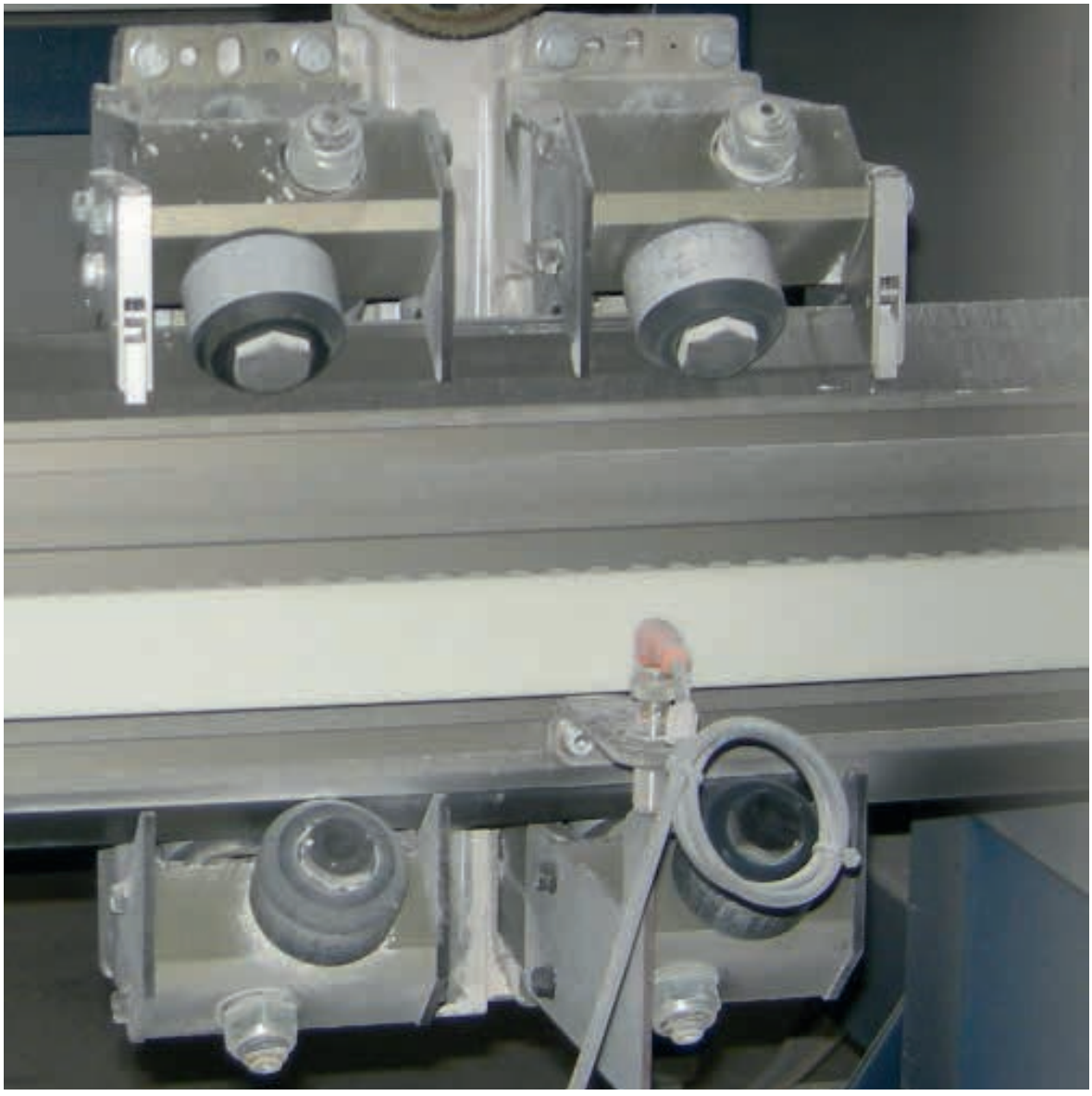

Ordering key

Code	Pag	Description	Profile
Light alloy guides			
SIMP-T	SR-6	Speedy Rail 35 guide	\\
SIMP-F	SR-6	Speedy Rail 35 guide with drilled ends	\\
CR48-T	SR-8	Speedy Rail C48 guide	\\
CR48-F/CR48-D	SR-8	Speedy Rail C 48 guide drilled	\\
SR060 - T	SR-14	'Mini Speedy Rail' SR60 guide	\\
SR060 - F	SR-14	'Mini Speedy Rail' SR60 guide with drilled ends	\\
SR090 - T	SR-21	'Middle Speedy Rail' SR90 guide	\\
SR090 - F	SR-21	Middle Speedy Rail with drilled ends	\\
SR120 - T	SR-27	"Standard Speedy Rail" SR120 guide	\\
SR120 - F	SR-27	"Standard Speedy Rail" SR120 with drilled ends	\\
SR180 - T	SR-53	Speedy Rail 'Wide Body' SR180 guide	\\
SR180 - F	SR-53	Speedy Rail 'Wide Body' SR180 guide with drilled ends	\\
SR250 - T	SR-61	Speedy Rail 'Super Wide Body' SR250 guide	\\
SR250 - F	SR-61	Speedy Rail 'Super Wide Body' SR250 guide with drilled ends	\\
Roller			
ROL-C062VC-BA	SR-23	Concentric roller axially free	SR90
ROL-E062VC-BA	SR-23	Eccentric roller axially free	SR90
ROL-C032VC-B	SR-16	Light concentric 'V'-Shaped roller	SR60
ROL-E032VC-B	SR-16	Light eccentric 'V'-Shaped roller	SR60
ROL-C090VC-BH	SR-33	Heavy duty concentric 'V' roller	SR120/SR180/SR250
ROL-E090VC-BH	SR-33	Heavy duty eccentric 'V' roller	SR120/SR180/SR250
ROL-C062VC-BH	SR-23	Concentric roller heavy duty	SR90
ROL-E062VC-BR	SR-23	Ecccentric roller heavy duty	SR90
ROL-C080VC-BR	SR-32	High stiffness concentric roller	SR120
ROL-E080VC-BR	SR-32	High stiffness eccentric roller	SR120
ROL-C050VC-B	SR-17	Plastic compound concentric roller	SR60
ROL-E050VC-B	SR-17	Plastic compound eccentric roller	SR60
ROL-C080VC-BVA	SR-32	Concentric roller - axially free	SR120
ROL-E080VC-BVA	SR-32	Eccentric roller - axially free	SR120
ROL-C080VC-B	SR-32	Concentric roller	SR120
ROL-E080VC-B	SR-32	Eccentric roller	SR120
ROL-C062VC-B	SR-23	Concentric 'V'-shaped roller	SR90
ROL-E062VC-B	SR-23	Eccentric 'V'-shaped roller	SR90
ROL-C090VC-BAH	SR-33	Heavy duty concentric 'V' roller - axially free	SR120/SR180/SR250
ROL-E090VC-BAH	SR-33	Heavy duty eccentric 'V' roller - axially free	SR120/SR180/SR250

Code	Pag	Description	Profile
ROL-E031WC-B	SR-10	Axially constrained eccentric roller	SRC48
ROL-C031WC-X	SR-10	Axially constrained concentric roller	SRC48
ROL-C031VC-XA	SR-10	Axially free concentric roller	SRC48
ROL-E031VC-BA	SR-10	Axially free eccentric roller	SRC48
ROL-C030CC-B	SR-7	Concentric contrast roller	SR35
ROL-E030CC-B	SR-7	Eccentric contrast roller	SR35
ROL-C034VC-B	SR-6	Concentric roller	SR35
ROL-E034VC-B	SR-6	Eccentric roller	SR35
ROL-C090VC-BS	SR-33	Protected concentric 'V' roller for heavy duties	SR120/SR180/SR250
ROL-E090VC-BS	SR-33	Protected eccentric 'V' roller for heavy duties	SR120/SR180/SR250
ROL-E052CCC-BP	SR-35	Eccentric roller	SR120
ROL-C052CCC-BP	SR-35	Concentric roller	SR120
ROL-E052CCC-BV	SR-35	Eccentric roller	SR120
ROL-C052CCC-BV	SR-35	Concentric roller	SR120
ROL-C052CCL-BV	SR-35	Concentric roller	SR120/SR180/SR250
ROL-E052CCL-BV	SR-35	Eccentric roller	SR120/SR180/SR250
ROL-C052CCL-BP	SR-35	Concentric roller	SR120/SR180/SR250
ROL-E052CCL-BP	SR-35	Eccentric roller	SR120/SR180/SR250
ROL-C040CC-BP	SR-35	Concentric roller radial load - Periodical lubrication	SR120/SR180/SR250
ROL-C040CC-BV	SR-35	Concentric roller radial load - Lifetime lubrication	SR120/SR180/SR250

Roller assemblies			
55.0222	SR-41	8 Rollers blindo beam roller assembly	SR120
55.0323	SR-39	Roller assembly with backing plate 280x150	SR120
55.0324	SR-39	Roller assembly with backing plate 235.5X80	SR120
55.0325	SR-38	Light alloy body roller assembly with side holes	SR120/SR180/SR250
55.0372	SR-16	Roller assembly with 3 rollers	SR60
55.0375	SR-17	Roller assembly with 4 rollers	SR60
55.0411	SR-40	Narrow base blindo beam roller assembly	SR120
55.0433	SR-38	Light alloy body roller assembly with side mounting holes	SR120/SR180/SR250
55.0472	SR-40	Wide base blindo beam roller assembly	SR120
55.0513	SR-56	Roller assembly with backing plate 336x150	SR180
55.0514	SR-56	Roller assembly with backing plate 381.5x80	SR180
55.0557	SR-34	Light weight roller assembly with 4 rollers	SR120
55.0558	SR-34	Roller assembly with 4 high stiffness rollers	SR120
55.0604	SR-37	Compact roller assembly	SR120/SR180/SR250
55.0605	SR-17	Roller assembly with 3 rollers	SR60
55.0606	SR-18	Roller assembly with 4 rollers	SR60
55.0665	SR-24	Roller assembly with 3 rollers	SR90
55.0666	SR-24	Roller assembly with 4 rollers	SR90
55.0711	SR-40	Wide base roller assembly	SR120
55.0713	SR-56	Roller assembly with backing plate 336x150	SR180

Code	Pag	Description	Profile
55.0723	SR-39	Roller assembly with backing plate 280x150	SR120
55.0724	SR-39	Roller assembly with backing plate 235.5X80	SR120
55.0725	SR-38	Light alloy body roller assembly with mounting holes on short sides	SR120/SR180/SR250
55.0733	SR-38	Light alloy body roller assembly with mounting holes on long sides	SR120/SR180/SR250
55.0740	SR-56	Roller assembly with backing plate 381.5x80	SR180
55.0772	SR-40	Wide base blindo beam roller assembly	SR120
55.0794	SR-37	Compact roller assembly	SR120/SR180
55.0808	SR-63	Roller assembly with 4 V-shaped rollers	SR 250
55.1060	SR-11	Roller assembly with two concentric rollers and one eccentric roller	SRC48
55.1062	SR-10	Roller assembly with one concentric and one eccentric roller	SRC48
55.1064	SR-11	Roller assembly with one conc. roller	SRC48
55.1065	SR-10	Roller assembly with 4 rollers, 3 conc. and 1 ecc.	SRC48
55.1066	SR-10	Roller assembly with one ecc. axial free roller	SRC48
55.1067	SR-10	Roller assembly with one conc. axial free roller	SRC48
55.1135	SR-44	Roller assembly with one ecc. roller	SRC48
55.1136	SR-44	Fixed 5 concentric rollers assembly	SR120
55.1143	SR-47	Fixed 5 roller assembly, with 2 eccentric rollers for auto backlash retrival	SR120
55.1144	SR-47	Floating roller assembly with 8 rollers - short pivot ecc. - periodical lubrication	SR120/SR180/SR250
55.1145	SR-47	Floating roller assembly with 8 rollers - short pivot conc. - periodical lubrication	SR120/SR180/SR250
55.1146	SR-47	Floating roller assembly with 8 rollers - short pivot ecc. - lifetime lubrication	SR120/SR180/SR250
55.1147	SR-47	Floating roller assembly with 8 rollers - short pivot conc. - lifetime lubrication	SR120/SR180/SR250
55.1148	SR-47	Floating roller assembly with 8 rollers - long pivot ecc. - periodical lubrication	SR120/SR180/SR250
55.1149	SR-47	Floating roller assembly with 8 rollers - long pivot conc. - periodical lubrication	SR120/SR180/SR250
55.1150	SR-47	Floating roller assembly with 8 rollers - long pivot ecc. - lifetime lubrication	SR120/SR180/SR250
55.1180	SR-55	Floating roller assembly with 8 rollers - long pivot conc. - lifetime lubrication	SR120/SR180/SR250
55.1350	SR-43	Heavy duty roller assembly with 4 rollers	SR180
55.1351	SR-43	Floating roller assembly with 4 rollers - long pivot ecc.	SR120/SR180/SR250
55.1354	SR-43	Floating roller assembly with 4 rollers - long pivot conc.	SR120/SR180/SR250
55.1355	SR-43	Floating roller assembly with 4 rollers - short pivot ecc.	SR120/SR180/SR250
55.1358	SR-43	Floating roller assembly with 4 rollers - short pivot conc.	SR120/SR180/SR250
55.1359	SR-43	Floating roller assembly with 4 rollers - short pivot ecc. with axially free	SR120/SR180/SR250
55.1361	SR-43	Floating roller assembly with 4 rollers - short pivot conc. with axially free	SR120/SR180/SR250
55.1363	SR-43	Floating roller assembly with 4 rollers - short pivot ecc.	SR120/SR180/SR250
55.1364	SR-43	Floating roller assembly with 4 rollers - long pivot ecc.	SR120/SR180/SR250
55.1365	SR-43	Floating roller assembly with 4 rollers - short pivot conc.	SR120/SR180/SR250
55.1366	SR-46	Floating roller assembly with 4 rollers - long pivot conc.	SR120/SR180/SR250
55.1367	SR-46	Floating roller assembly with 6 rollers - short pivot ecc.	SR120/SR180/SR250
55.1368	SR-46	Floating roller assembly with 6 rollers - short pivot ecc.	SR120/SR180/SR250
55.1369	SR-46	Floating roller assembly with 6 rollers - long pivot ecc.	SR120/SR180/SR250
55.1370	SR-46	Floating roller assembly with 6 rollers - long pivot ecc.	SR120/SR180/SR250
55.1371	SR-46	Floating roller assembly with 6 rollers - short pivot conc.	SR120/SR180/SR250
55.1372	SR-48	Floating roller assembly with 6 rollers - long pivot conc.	SR120/SR180/SR250

Code	Pag	Description	Profile
55.1373	SR-46	Floating roller assembly with 6 rollers - long pivot conc.	SR120/SR180/SR250
55.1380	SR-57	Complete pairing floating assembly - short pivot	SR180
55.1381	SR-57	Complete pairing floating assembly - short pivot	SR180
55.1382	SR-57	Complete pairing floating assembly - long pivot	SR180
55.1383	SR-57	Complete pairing floating assembly - long pivot	SR180
55.1419	SR-45	Floating roller assembly with 6 rollers - long pivot ecc.	SR120/SR180/SR250
55.1420	SR-45	Floating roller assembly with 6 rollers - long pivot conc.	SR120/SR180/SR250
55.1421	SR-45	Floating roller assembly with 6 rollers - long pivot ecc.	SR120/SR180/SR250
55.1422	SR-45	Floating roller assembly with 6 rollers - long pivot conc.	SR120/SR180/SR250
55.1423	SR-45	Floating roller assembly with 6 rollers - short pivot ecc.	SR120/SR180/SR250
55.1424	SR-45	Floating roller assembly with 6 rollers - short pivot conc.	SR120/SR180/SR250
55.1425	SR-45	Floating roller assembly with 6 rollers - short pivot ecc.	SR120/SR180/SR250
55.1426	SR-45	Floating roller assembly with 6 rollers - short pivot conc.	SR120/SR180/SR250
55.1550	SR-36	2 Rollers light full-block assembly	SR120/SR180/SR250
55.1555	SR-42	Floating roller assembly with 4 rollers ecc.	SR120/SR180/SR250
55.1556	SR-42	Floating roller assembly with 4 rollers conc.	SR120/SR180/SR250
55.1565	SR-42	Floating roller assembly with 4 rollers ecc.	SR120/SR180/SR250
55.1566	SR-42	Floating roller assembly with 4 rollers conc.	SR120/SR180/SR250
55.1570	SR-36	Light alloy rollers assembly with 2 rollers - Lifetime lubricated.	SR120/SR180/SR250
55.3143	SR-47	Floating roller assembly with 8 rollers - short pivot ecc. - periodical lub. axially free	SR120/SR180/SR250
55.3144	SR-47	Floating roller assembly with 8 rollers - short pivot conc. - periodical lub. axially free	SR120/SR180/SR250
55.3145	SR-47	Floating roller assembly with 8 rollers - short pivot ecc. - lifetime lub. axially free	SR120/SR180/SR250
55.3146	SR-47	Floating roller assembly with 8 rollers - short pivot conc. - lifetime lub. axially free	SR120/SR180/SR250
55.3147	SR-47	Floating roller assembly with 8 rollers - long pivot ecc. - periodical lub. axially free	SR120/SR180/SR250
55.3148	SR-47	Floating roller assembly with 8 rollers - long pivot conc. - periodical lub. axially free	SR120/SR180/SR250
55.3149	SR-47	Floating roller assembly with 8 rollers - long pivot ecc. - lifetime lub. axially free	SR120/SR180/SR250
55.3150	SR-47	Floating roller assembly with 8 rollers - long pivot conc. - lifetime lub. axially free	SR120/SR180/SR250
55.3350	SR-43	Floating roller assembly with 4 rollers - long pivot ecc. with axially free	SR120/SR180/SR250
55.3351	SR-43	Floating roller assembly with 4 rollers - long pivot conc. with axially free	SR120/SR180/SR250
55.3361	SR-43	Floating roller assembly with 4 rollers - short pivot ecc. with axially free	SR120/SR180/SR250
55.3363	SR-43	Floating roller assembly with 4 rollers - long pivot ecc. with axially free	SR120/SR180/SR250
55.3364	SR-43	Floating roller assembly with 4 rollers - short pivot conc. with axially free	SR120/SR180/SR250
55.3365	SR-43	Floating roller assembly with 4 rollers - long pivot conc. with axially free	SR120/SR180/SR250
55.3366	SR-46	Floating roller assembly with 6 rollers - short pivot ecc. with axially free	SR120/SR180/SR250
55.3367	SR-46	Floating roller assembly with 6 rollers - short pivot ecc. with axially free	SR120/SR180/SR250
55.3368	SR-46	Floating roller assembly with 6 rollers - long pivot ecc. with axially free	SR120/SR180/SR250
55.3369	SR-46	Floating roller assembly with 6 rollers - long pivot ecc. with axially free	SR120/SR180/SR250
55.3370	SR-46	Floating roller assembly with 6 rollers - short pivot conc. with axially free	SR120/SR180/SR250
55.3371	SR-46	Floating roller assembly with 6 rollers - short pivot conc. with axially free	SR120/SR180/SR250
55.3372	SR-46	Floating roller assembly with 6 rollers - long pivot conc. with axially free	SR120/SR180/SR250
55.3373	SR-46	Floating roller assembly with 6 rollers - long pivot conc. with axially free	SR120/SR180/SR250
55.3419	SR-45	Floating roller assembly with 6 rollers - long pivot ecc. with axially free	SR120/SR180/SR250

Code	Pag	Description	Profile
55.3420	SR-45	Floating roller assembly with 6 rollers - long pivot conc. with axially free	SR120/SR180/SR250
55.3421	SR-45	Floating roller assembly with 6 rollers - long pivot ecc. with axially free	SR120/SR180/SR250
55.3422	SR-45	Floating roller assembly with 6 rollers - long pivot conc. with axially free	SR120/SR180/SR250
55.3423	SR-45	Floating roller assembly with 6 rollers - short pivot ecc. with axially free	SR120/SR180/SR250
55.3424	SR-45	Floating roller assembly with 6 rollers - short pivot conc. with axially free	SR120/SR180/SR250
55.3425	SR-45	Floating roller assembly with 6 rollers - short pivot ecc. with axially free	SR120/SR180/SR250
55.3426	SR-45	Floating roller assembly with 6 rollers - short pivot conc. with axially free	SR120/SR180/SR250
55.3553	SR-42	Floating roller assembly with 4 rollers ecc. with axially free	SR120/SR180/SR250
55.3554	SR-42	Floating roller assembly with 4 rollers conc. with axially free	SR120/SR180/SR250
55.3563	SR-42	Floating roller assembly with 4 rollers ecc. with axially free	SR120/SR180/SR250
55.3564	SR-42	Floating roller assembly with 4 rollers conc. with axially free	SR120/SR180/SR250

Dovetails and inserts			
411.0462	SR-15	Steel dovetail 2 holes M6 L=50 mm	SR60
411.0469	SR-29	Steel dovetail 2 holes M12 L=100 mm	SR120/SR180/SR250
411.0470	SR-29	Steel dovetail 6 holes M12 L=300 mm	SR120/SR180/SR250
411.0472	SR-29	Steel dovetail 2 holes M12 L=200 mm	SR120/SR180/SR250
411.0503	SR-29	Steel dovetail 2 holes M12 L=70 mm	SR120/SR180/SR250
411.0588	SR-29	Steel dovetail 3 holes M12 L=150 mm	SR120/SR180/SR250
411.0675	SR-29	Steel dovetail 2 holes M8 L=50 mm	SR120/SR180/SR250
411.0732	SR-15	Steel dovetail 1 hole M6 L=20 mm	SR60
411.0745	SR-29	Steel dovetail 1 hole M12 L=50 mm	SR120/SR180/SR250
411.0754	SR-15	Steel dovetail 3 holes M6 L=80 mm	SR60
411.0768	SR-15	Steel dovetail 2 holes M6 L=60 mm	SR60
411.0769	SR-15	Steel dovetail 6 holes M6 L=200 mm	SR60
411.0771	SR-15	Steel dovetail 2 holes M6 L=150 mm	SR60
411.0845	SR-29	Steel dovetail quick front insertion 1 hole M12 L=50 mm	SR120/SR180/SR250
411.0855	SR-22	Steel dovetail quick front insertion 1 hole M8 L=29 mm	SR90
411.0888	SR-30	Steel dovetail without step 3 holes M12 L=150 mm	SR120/SR180/SR250
411.0970	SR-29	Steel dovetail 6 holes M12 L=300 mm	SR120/SR180/SR250
411.1025	SR-22	Steel dovetail 1 hole M4 L=50mm	SR90
411.1045	SR-22	Steel dovetail 1 hole M8 L=50 mm	SR90
411.1047	SR-22	Steel dovetail 1 hole M6 L=50 mm	SR90
411.1046	SR-22	Steel dovetail without step 3 holes M8 L=50 mm	SR90
411.1069	SR-22	Steel dovetail 2 holes M8 L=100 mm	SR90
411.1070	SR-22	Steel dovetail 6 holes M8 L=300 mm	SR90
411.1072	SR-22	Steel dovetail 4 holes M8 L=200 mm	SR90
411.1088	SR-22	Steel dovetail 3 holes M8 L=150 mm	SR90
411.1111	SR-29	Steel dovetail 1 hole M8 L=50 mm	SR120/SR180/SR250
411.1112	SR-29	Steel dovetail 2 holes M8 L=100 mm	SR120/SR180/SR250
411.1113	SR-29	Steel dovetail 3 holes M8 L=150 mm	SR120/SR180/SR250
411.1117	SR-29	Steel dovetail 1 hole M10 L=50 mm	SR120/SR180/SR250

Code	Pag	Description	Profile
411.1119	SR-29	Steel dovetail 2 holes M10 L=100 mm	SR120/SR180/SR250
411.1120	SR-29	Steel dovetail 3 holes M10 L=150 mm	SR120/SR180/SR250
411.1174	SR-30	Steel dovetail quick front insertion without step 1 hole M8 L=50 mm	SR120/SR180/SR250
411.1178	SR-29	Steel dovetail quick front insertion 1 hole M10 L=50 mm	SR120/SR180/SR250
411.1185	SR-30	Steel dovetail without step 1 hole M12 L=50 mm	SR120/SR180/SR250
411.1186	SR-30	Steel dovetail without step 1 hole M10 L=50 mm	SR120/SR180/SR250
411.1349	SR-53	Zinc plated steel insert 1 hole M4 L=16 mm, with spring loaded ball	SR180/SR250
411.1351	SR-53	Zinc plated steel insert 1 hole M5 L=16 mm, with spring loaded ball	SR180/SR250
411.1352	SR-53	Zinc plated steel insert 1 hole M6 L=16 mm, with spring loaded ball	SR180/SR250
411.1353	SR-53	Zinc plated steel insert 1 hole M8 L=16 mm, with spring loaded ball	SR180/SR250
411.1675	SR-30	Steel dovetail without step 2 holes M8 L=50 mm	SR120/SR180/SR250
411.1732	SR-15	Steel dovetail 1 hole M4 L=20 mm	SR60
411.2533	SR-53	9 holes steel insert M5 L=496 mm	SR180/SR250
411.2534	SR-53	9 holes steel insert M4 L=496 mm	SR180/SR250
411.2732	SR-15	Steel dovetail 1 hole M5 L=20 mm	SR60
411.2733	SR-15	Steel dovetail 9 holes M5 L=496 mm	SR60
411.2736	SR-15	Dovetail quick front insertion 1 hole M6	SR60
411.3532	SR-15	Steel dovetail 1 hole M8 L=20 mm	SR60
411.3633	SR-53	9 holes steel insert M6 L=496 mm	SR180/SR250

Fishplates			
411.0567	SR-31	Fishplate for drive head L=130 mm	SR120/SR180/SR250
411.0570	SR-31	Fishplate for side-arm attachment L=200 mm	SR120/SR180/SR250
411.0572	SR-31	Fishplate for end to end joining L=300 mm	SR120/SR180/SR250
411.0573	SR-31	Fishplate for end to end joining L=300 mm countersuk holes	SR120/SR180/SR250
411.0582	SR-55	Fishplate for roller assembly 55.1180	SR180
411.0463	SR-15	Light alloy fishplate	SR60
411.0690	SR-31	Steel fishplate for end to end joining L=300 mm	SR120/SR180/SR250
411.0735	SR-34	Fishplate for roller assemblies 55.0557 / 55.0558	SR120
411.0749	SR-17	Fishplate for roller assemblies 55.0605	SR60
411.0750	SR-18	Fishplate for roller assemblies 55.0606	SR60
411.0767	SR-14	Fishplate for drive head L=80 mm	SR60
411.0770	SR-16	Fishplate for side-arm attachment L=150 mm	SR60
411.0772	SR-15	Fishplate for drive head L=200 mm	SR60
411.0824	SR-24	Fishplate for roller assemblies 55.0665	SR90
411.0825	SR-24	Fishplate for roller assemblies 55.0666	SR90
411.0866	SR-21	Fishplate for drive head L=130 mm	SR90
411.0872	SR-22	Fishplates for end to end joining L=300 mm	SR90
411.0913	SR-16	Fishplate for roller assemblies 55.0372	SR60
411.0914	SR-17	Fishplate for roller assemblies 55.0375	SR60
411.0957	SR-63	Light alloy fishplate for roller assemblies 55.0788, 55.0808	SR250
411.0960	SR-61	Steel fishplates for end to end joining L=300mm	SR250

Code	Pag	Description	Profile
411.1124	SR-22	Fishplate for side-arm attachment L=150 mm	SR90
411.1041	SR-16	Plate for m^2 rack mounting	SR60
411.1155	SR-30	Fishplate for mod.3-4 rack mounting	SR120/SR180/SR250
411.1179	SR-54	Fishplate for mod.2 Rack mounting	SR180/SR250
411.1226	SR-22	Steel plate for m^2 rack mounting m^2	SR90
Racks			
411.1489	SR-49	Rack m2 Q10 L=998,82 straight toothed	\\
411.1491	SR-49	Rack m2 Q10 L=2004,14 straight toothed	\\
411.1499	SR-49	Rack m3 Q10 L=998,82 straight toothed	\\
411.1501	SR-49	Rack m3 Q10 L=1997,84 straight toothed	\\
411.1509	SR-49	Rack m4 Q10 L=1005,10 straight toothed	\\
411.1511	SR-49	Rack m4 Q10 L=2010,42 straight toothed	\\
Components			
411.0476	SR-28	Drive head	SR120
411.0610	SR-21	Bolt for drive head mount TE M6x55	SR90
411.0617	SR-28	Bolt for drive head mount TE M8x70	SR120
411.0685	SR-50	Scraper for floating and full-block assemblies	SR120/SR180/SR250
411.0686	SR-50	Scraper for compact	SR120/SR180/SR250
411.0696	SR-54	Drive head	SR180
411.0739	SR-14	Drive head	SR60
411.0744	SR-54	Bolt for drive head TE M8x90	SR180
411.0775	SR-14	M6 allen round head screw	SR60
411.0776	SR-14	Drive head	SR60
411.0818	SR-15	Bolt for drive head mount TE M5x40	SR60
411.0832	SR-58	Fishplate for drive head	SR180
411.0856	SR-21	Drive head	SR90
411.0858	SR-21	End cap	SR90
411.1015	SR-62	Drive head	SR 250
411.1261	SR-44	5 rollers assembly supports	SR120/SR180/SR250
411.1963	SR-62	End cap	SR 250
411.1964	SR-54	End cap	SR180
411.1740	SR-28	Alluminium alloy end cap	SR120
55047202	SR-50	Scraper for blindo beam roller assemblies	SR120
55.1000	SR-50	Sliding brush for speedy rail and steel rail	SR120SR180/SR250

Notes

Guides suitable for all applications

Railway





Medical

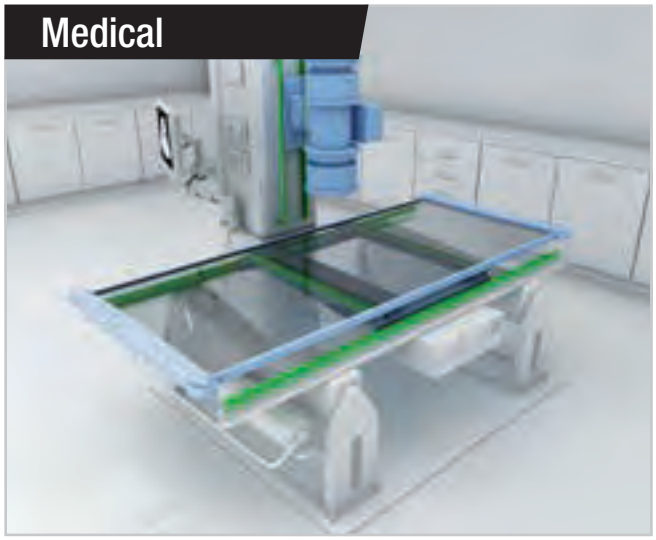

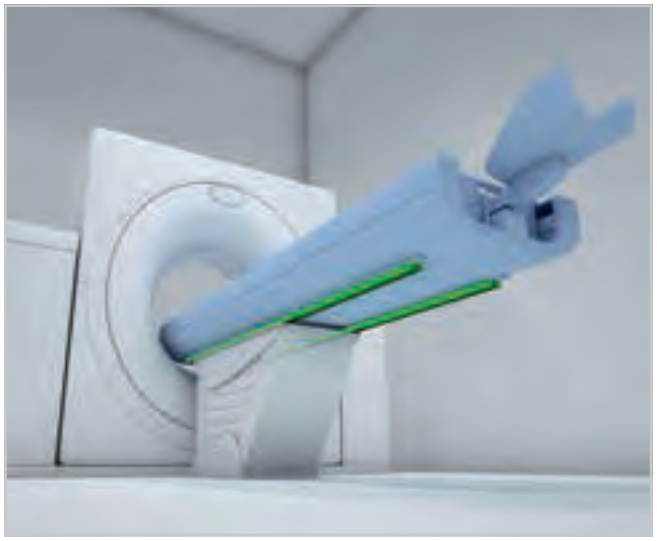

Logistics





Aerospace





Special Vehicles



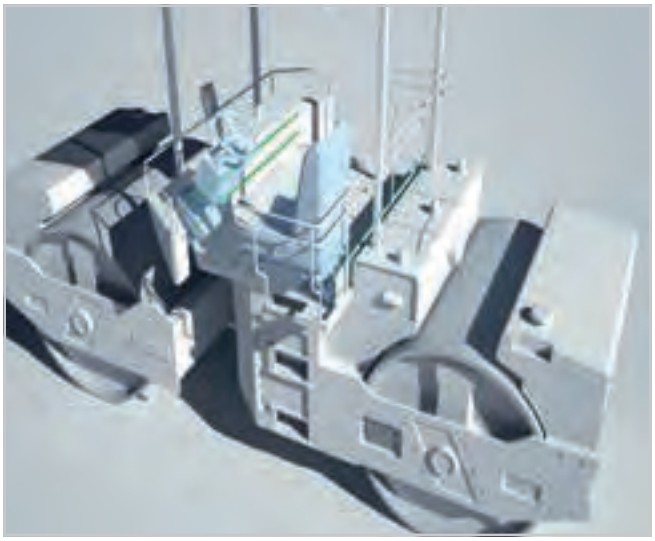

Industrial





ROLLON®
BY TIMKEN



Follow us:

EUROPE

ROLLON S.p.A. - ITALY (Headquarters)

Via Trieste 26
I-20871 Vimercate (MB)
Phone: (+39) 039 62 59 1
www.rollon.it - infocom@rollon.it

ROLLON GmbH - GERMANY

Bonner Strasse 317-319
D-40589 Düsseldorf
Phone: (+49) 211 95 747 0
www.rollon.de - info@rollon.de

ROLLON S.A.R.L. - FRANCE

Les Jardins d'Eole, 2 allée des Séquoias
F-69760 Limonest
Phone: (+33) (0) 4 74 71 93 30
www.rollon.fr - infocom@rollon.fr

ROLLON S.p.A. - RUSSIA (Rep. Office)

117105, Moscow, Varshavskoye
shosse 17, building 1
Phone: +7 (495) 508-10-70
www.rollon.ru - info@rollon.ru

ROLLON Ltd - UK (Rep. Office)

The Works 6 West Street Olney
Buckinghamshire, United Kingdom, MK46 5 HR
Phone: +44 (0) 1234964024
www.rollon.uk.com - info@rollon.uk.com

AMERICA

ROLLON Corporation - USA

101 Bilby Road. Suite B
Hackettstown, NJ 07840
Phone: (+1) 973 300 5492
www.rollon.com - info@rolloncorp.com

ROLLON - SOUTH AMERICA

101 Bilby Road. Suite B
Hackettstown, NJ 07840
Phone: (+1) 973 300 5492
www.rollon.com - info@rolloncorp.com

ASIA

ROLLON Ltd - CHINA

No. 1155 Pang Jin Road,
China, Suzhou, 215200
Phone: +86 0512 6392 1625
www.rollon.cn.com - info@rollon.cn.com

ROLLON India Pvt. Ltd. - INDIA

1st floor, Regus Gem Business Centre, 26/1
Hosur Road, Bommanahalli, Bangalore 560068
Phone: (+91) 80 67027066
www.rollonindia.in - info@rollonindia.in

ROLLON - JAPAN

3F Shiodome Building, 1-2-20 Kaigan, Minato-ku,
Tokyo 105-0022 Japan
Phone +81 3 6721 8487
www.rollon.jp - info@rollon.jp

Consult the other ranges of products



Distributor

All addresses of our global sales partners can also be found at www.rollon.com

The content of this document and its use are subject to the general terms of sale of ROLLON available on the web site www.rollon.com
Changes and errors expected. The text and images may be used only with our permission.