

Aquanet PLUS AC/DC

THE PROFESSIONAL ELECTRIC/HYDRAULIC VALVE LINE



APPLICATIONS

- Agriculture: for all applications
- Landscape: for all applications
- Industry: water supply system

FEATURES & BENEFITS

- Patented hydraulic 3-way control
- Designed to operate with all types of water, including effluentwater (2 mm command orifice)
- pressure & flowrange
- Manual override: CLOSE-AUTO-OPEN
- Built-in pressure regulator with adjustable knob 0.7 – 4.5 bar (optional 1 ½" & 2" Electrical models only)
- Low energy consumption for maximal wire distance
- Flow control handle – standard on all models
- EPDM diaphragm resistant against chemicals used in agriculture

WWW.NETAFIM.COM
E-MAIL: PRODUCTS_SOLUTIONS@NETAFIM.COM

NETAFIM™
GROW MORE WITH LESS



¾" & 1" MODELS

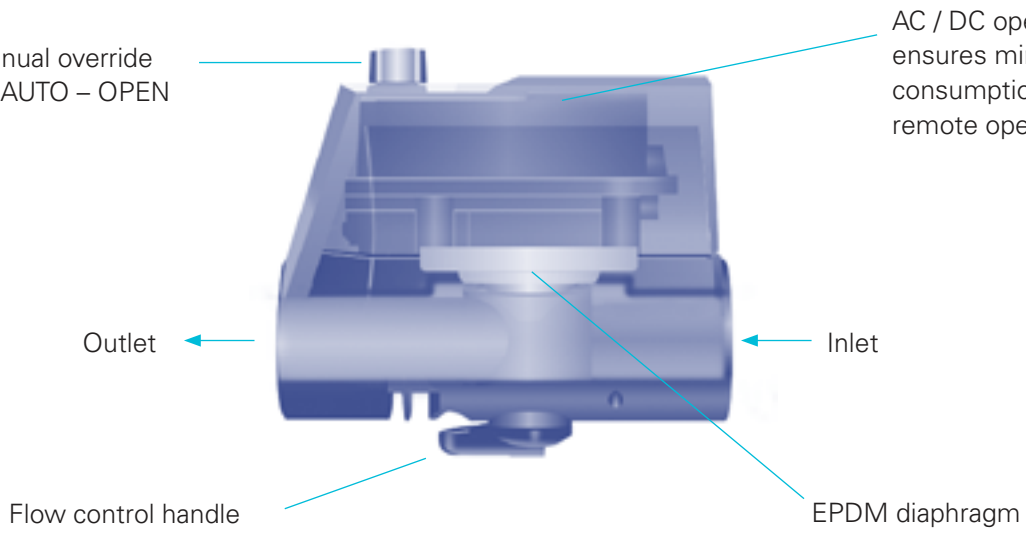

1 ½" & 2" MODELS

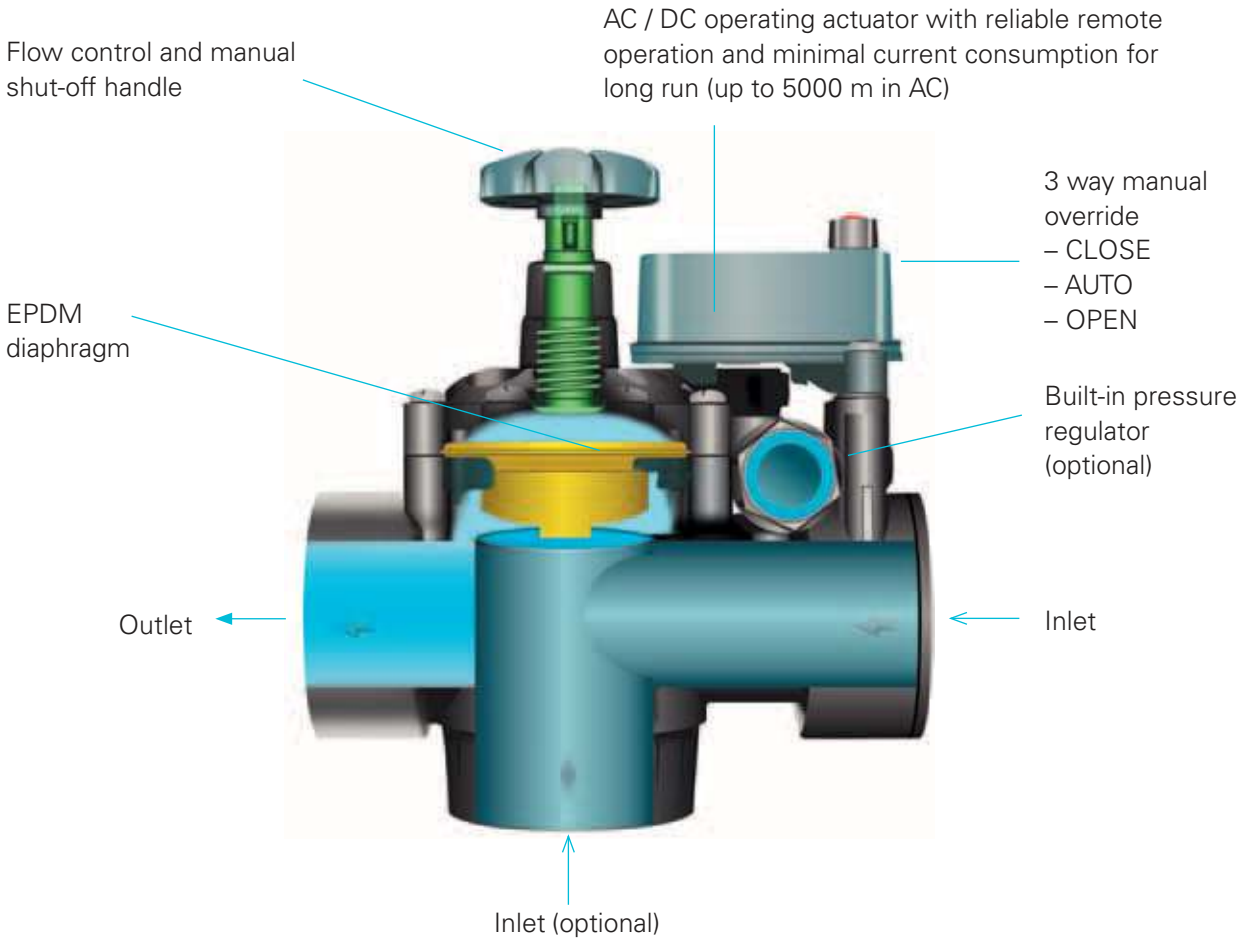

WWW.NETAFIM.COM
E-MAIL: PRODUCTS_SOLUTIONS@NETAFIM.COM

NETAFIM™
GROW MORE WITH LESS



GENERAL SPECIFICATIONS

¾" & 1" GLOBE MODELS	
Flow:	0.025 – 7.0 m3/h
Working pressure:	0.2 -10 bar
Ambient temp. max:	60°C (140°F)
Fluid temp. max:	60°C (140°F)
Plastic parts:	Reinforced nylon
Diaphragms:	EPDM
Leads:	2 x AWG 22 (80 cm)

1½" & 2" GLOBE & ANGLE MODELS	
Flow:	0.1 – 34.0 m3/h
Working pressure:	0.3 -10 bar
Ambient temp. max:	60°C (140°F)
Fluid temp. max:	60°C (140°F)
Plastic parts:	Reinforced nylon
Diaphragms:	EPDM
Leads:	2 x AWG 22 (120 cm)

Pressure Regulating Range: 0.7-4.5 bar (1½" & 2" electric models only)

ELECTRICAL SPECIFICATIONS 24VAC

Voltage:	18-28 VAC
Inrush:	90 mA
Holding:	75 mA

• In AC models, 2-5 seconds delay from command to activation

Max. distance between Aquanet Plus AC and controllers

CABLE GAUGE (AWG)	DIAMETER (MM)	CROSS SECTION (MM2)	MAX. DISTANCE (M)
20	0.8	0.5	1250
18	1.0	0.8	2000
17	1.1	1.0	2500
16	1.3	1.3	3500
15	1.4	1.5	5000

ELECTRICAL CONNECTIONS

¾" & 1" DC Red + Black common
¾" & 1" AC Black/Black
1 ½" & 2" DC Red + Black common
1 ½" & 2" AC Black/Black
(changing DC wire connections will change NC to NO)
It is recommended to isolate wires connections from water to prevent corrosion).
AquanetPlus DC is compatible with most DC latch controllers with two or three wire output. For specific models please contact your Netafim representative.

ELECTRICAL SPECIFICATIONS DC

DISCHARGE CAPACITOR MODE		
Voltage:	12-40 VDC	
Min. pulse width:	80 ms	
Recommended working condition capacitor mode		
Voltage (VDC)	Capacitor (µf)	Min. pulse (ms)
12-18	4700	80
18-28	3300	80
28-40	2200	80

MAX. DISTANCE BETWEEN AQUANET PLUS DC VALVES AND CONTROLLER (13.5 VDC, 80 MS, 4700 µF)

CABLE GAUGE (AWG)	DIAMETER (MM)	CROSS SECTION (MM2)	MAX. DISTANCE (M)
20	0.8	0.5	150
17	1.1	1.0	240
15	1.4	1.5	380

HEAD LOSS (M) FLOW M3/L

MODEL	1	2	3	4	6	8	10	12	14	16	18	20	22	24	26	28	30	32	34
3/4" G	1.00	1.30	2.00	2.50	4.50														
1" G	1.00	1.30	2.00	2.40	4.00														
11/2" G	0.52	0.64	0.77	0.92	1.28	1.70	2.21	2.79	3.46	4.22	5.06	6.00	7.00	8.17	9.41	10.75	12.20	13.77	15.46
11/2" A	0.90	0.93	0.98	1.05	1.23	1.48	1.80	2.18	2.64	3.18	3.79	4.49	5.26	6.12	7.06	8.08	9.20	10.40	11.70
11/2" A-G	0.00	0.10	0.40	0.70	1.30	1.92	2.57	3.25	3.98	4.76	5.61	6.53	7.54	8.64	9.84	11.16	12.60	14.17	15.90
11/2" HYG	0.36	0.36	0.42	0.43	0.72	1.06	1.49	2.04	2.68	3.44	4.30	5.26	6.33	7.50	8.77	10.15	11.63	13.22	14.90
11/2" HYA	–	–	0.00	0.00	0.30	0.57	0.87	1.21	1.60	2.04	2.52	3.05	3.63	4.26	4.94	5.67	6.45	7.28	8.18
2" G	0.63	0.74	0.86	1.00	1.33	1.71	2.16	2.69	3.28	3.96	4.72	5.56	6.50	7.54	8.67	9.91	11.26	12.72	14.30
2" A	1.41	1.30	1.23	1.18	1.15	1.23	1.41	1.68	2.04	2.50	3.03	3.65	4.35	5.12	5.97	6.88	7.85	8.89	9.99
2" A-G	1.40	1.69	1.97	2.25	2.80	3.35	3.92	4.50	5.12	5.77	6.48	7.24	8.00	8.99	9.98	11.09	12.30	13.60	15.06
2" HYG	–	–	–	0.00	0.38	0.83	1.34	1.93	2.60	3.34	4.16	5.07	6.06	7.15	8.33	9.60	10.97	12.45	14.02
2" HYA	–	0.02	0.06	0.12	0.27	0.47	0.73	1.04	1.40	1.81	2.28	2.80	3.36	3.98	4.65	5.37	6.14	6.96	7.84

• G = Globe • A = Angle • A-G = Angle valve globe flow • HYG = Hydraulic globe valve • HYA = Hydraulic angle valve

WWW.NETAFIM.COM
E-MAIL: PRODUCTS_SOLUTIONS@NETAFIM.COM

NETAFIM™
GROW MORE WITH LESS



MEASUREMENTS

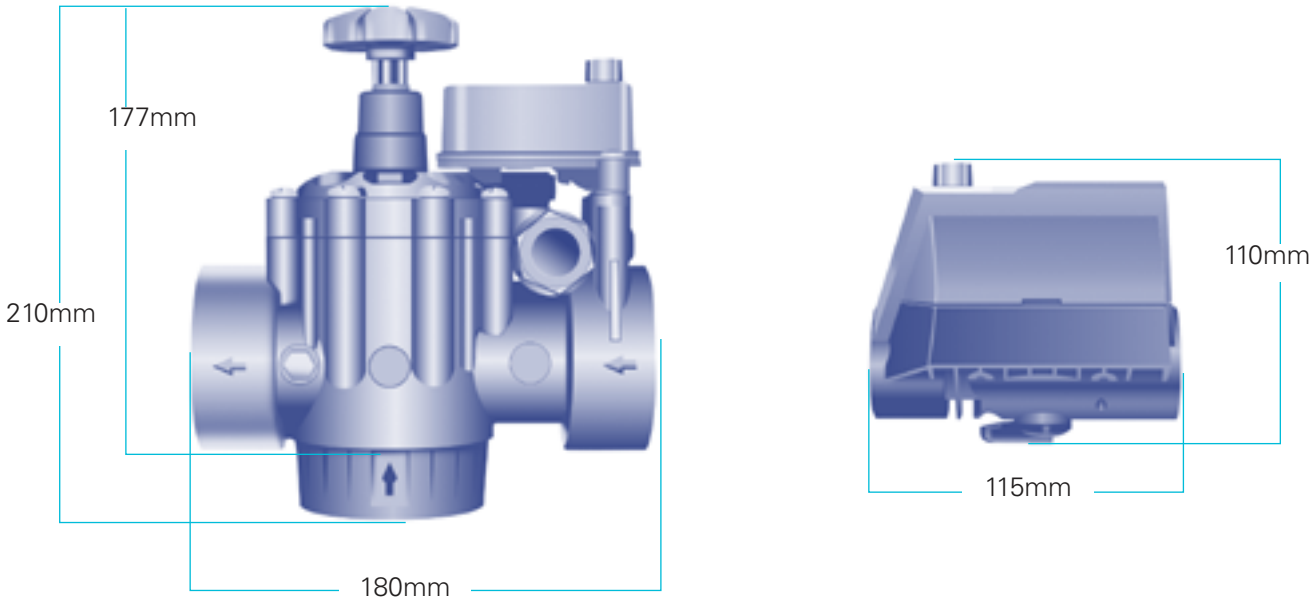

ORDERING GUIDE

MODEL	AC	DC	BCP	NPT	GLOBE	ANGLE	W/ P/R	W/ F/C
¾"	+	+	+	+	+			+
1"	+	+	+	+	+			+
1½"	+	+	+	+	+	+	+	+
1½" hydr.			+	+	+	+		+
2"	+	+	+	+	+	+	+	+
2" hydr.			+	+	+	+		+

Example: AquanetPlus 1'' electric valve, DC, BSP.
Remarks:
* AquanetPlus ¾'' and 1'' models available in globe type only.
** Pressure regulated available in 1½'' and 2'' electric models only.

PACKAGING DATA

MODEL	QUANTITY P/BOX UNITS	BOX DIMENSIONS CM X CM X CM	BOX WEIGTH KG (AVERAGE)
AquanetPlus ¾", 1"	12	47.0 x 26.0 x 12.0	4.45
AquanetPlus 1½" G	1	21.5 x 12.5 x 19	1.18
AquanetPlus 1½" A	1	21.5 x 12.5 x 19	1.29
AquanetPlus 2" G	1	21.5 x 12.5 x 19	1.16
AquanetPlus 2" A	1	21.5 x 12.5 x 19	1.24
Pressure Regulator Kit	1	12.0 x 9.0 x 7.0	0.11

06-1110-DRP-PS-077-EN

WWW.NETAFIM.COM
E-MAIL: PRODUCTS_SOLUTIONS@NETAFIM.COM

NETAFIM™
GROW MORE WITH LESS