First Edition: 2012-11-13
Revised Edition: 2019-03-04

Tip dresser (CDEL)

User Manual（FANUC motor brief version）

Please read this manual before using KYOKUTOH's
High Auto Tip Dresser (CDEL)

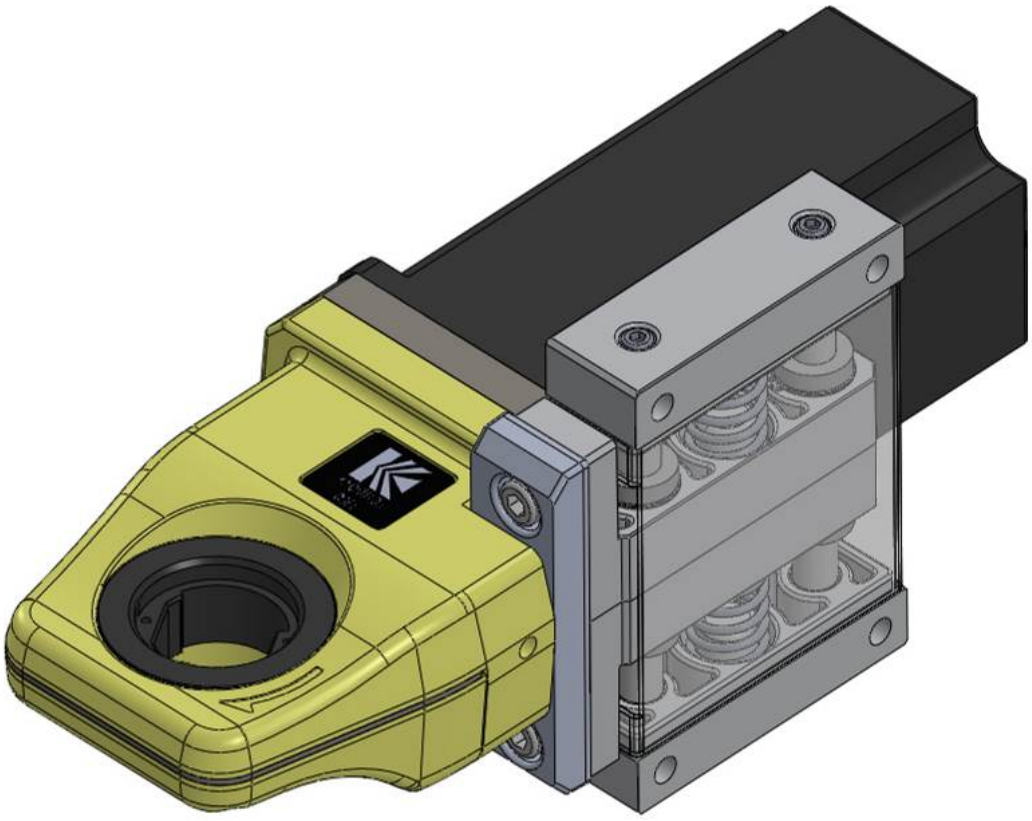

KYOKUTOH CO.,LTD

Cautions When Setting Up

Our miniaturized servo dresser CDEL is not designed to be set up-side down.
Please set in a proper way to avoid damage to the product.

<OK>

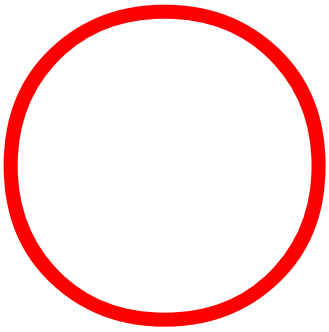

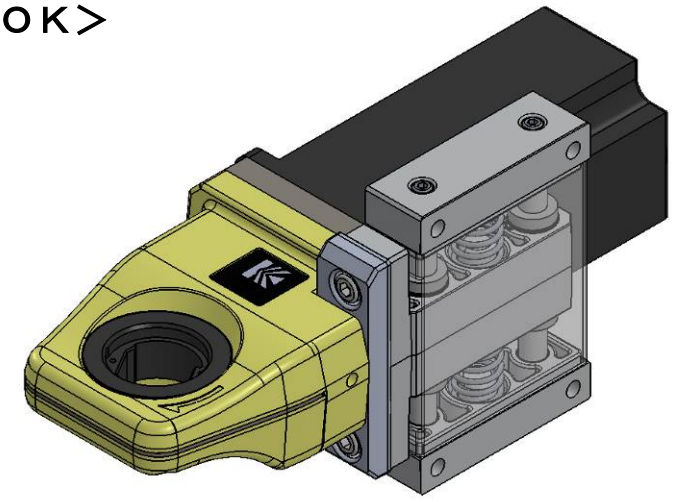

<OK>

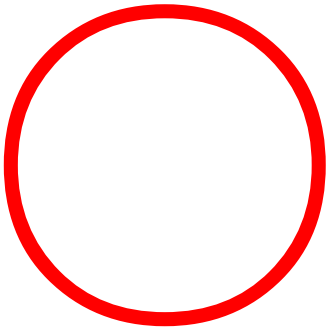

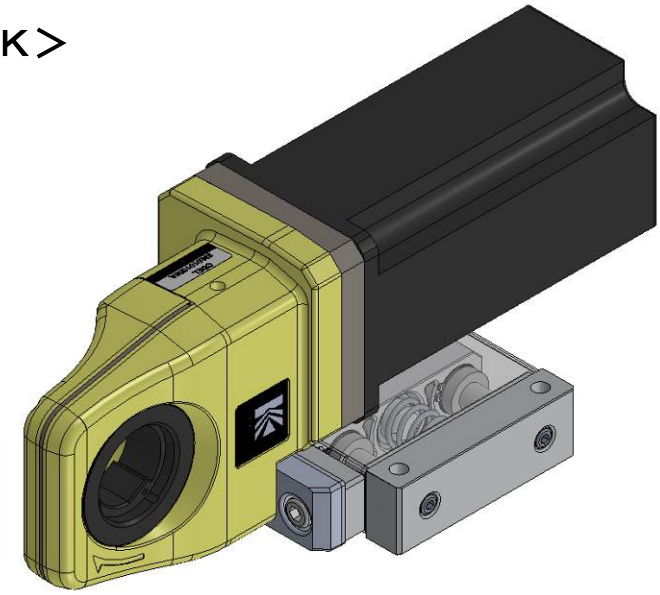

<NG>



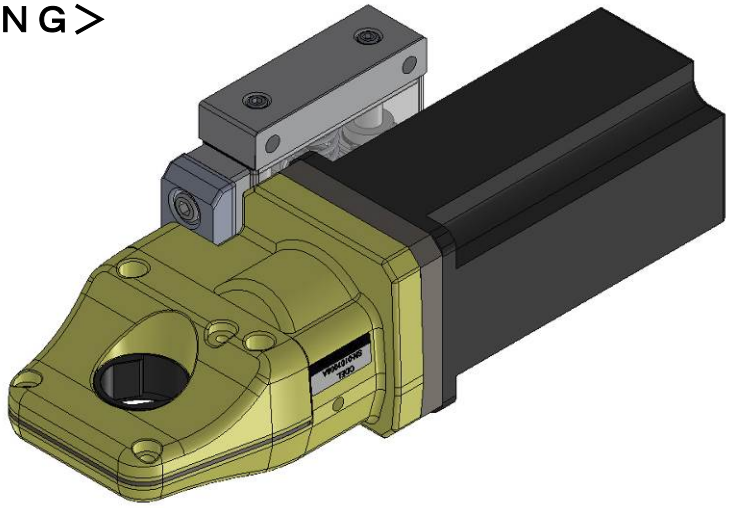

ATTENTION TO SAFETY

※ Please be sure to read this ATTENTION TI SAFETY before using CDEL.

This product is intended only for the dressing of specified electrodes. This product is not to be in any manner other than that which is specified within. We will not be held responsible for damage or injury caused as a result of misuse of this product.

SYMBOLES

※This following symbols “Caution” and “Notice”, are used indicate possible hazards and to prevent their occurrence.

⚠ Caution	Be careful to follow directions as specified, as an error could lead to possible injure or death.
⚠ Notice	Be careful to follow directions as specified, as an error could lead to malfunction and serious damage.

The following symbols are explained below.

	This symbol indicates operation that should not be done.
	This symbol indicates operation that should be done.

※After reading, please the manual to the place where you can check the manual.

⚠ Caution

Abolutely never diassemble or reconfiguew this machine or its parts. ○ **This could result in operation malfunction (short), electrical shock or ignition.**	Do noto insert a finger or hand into gear opening ehils in operation. ○ **This will result in serious injury.**
Avoid as much contact with water as possible. ○ **This could result in operation malfunction (short), electrical shock or ignition.**	Remove the spatter, which covers the tip dresser periodically. ○ **Spatter build-up can cause operation malfunction or ignition resulting in injury.**
Be sure to swich off the power supply, when removing or repairing wiring. ○ **Will cause electrical shock.**	Do noto use acidic or chlorine detergents for maintenance purposes. ○ **Poisonous gas may be generated from the detergent, causing a possible health risk.**
Remove any oil that may occumlate on the tip dresser. ○**Spatter could cause ignition and possible injury.**	

⚠ Notice

Firmly fix tip dresser to stand. ○ **If the Tip Dresser is not fixed tightly in operation, poor dressing and other problems could occur**	Be sure that the motor is not locked up. ○ **This could result in overheating and possible ignition.**
Do not use any autter or holder other than that which is intended and specified. ○ **Use of an unspecified cutter or holder, could result in damage.**	Do not install near the themal generation source of the welding machine. ○ **This could cause trouble and accidents.**
Do not install between a welding machine and transformer. ○ **Strong magnetic forces and heat can be dangerous and possibly cause malfunctions or ignition.**	

INDEX

Servo Dresser Capabilities ——— 1

Servo motor assemble ——— 2

Timing Chart ——— 3

Drawing ——— 4

Parts List ——— 5

How to Change the Cutter ——— 7

Cautions and Confirmation before the Operation ——— 9

Abnormality and How to Repair ——— 11

Consumption Parts List ——— 13

Contacts ——— 14

Servo Motor Capabilities

	Reduction Geer Rate	１：１０
Recommended	Recommended Revolution	２５００ｒｐｍ （Output revolution ２５０ｒｐｍ）
	Rated torque	２．４N・m ～ ３．１N・m
	Max torque	～ ７N・m
Servo motor’s specification	Shaft diameter of Motor	φ１４
	Shaft length from flange	３０mm
	Valid shaft length	Over ２５mm
	Flange diameter	φ８０
	External dimension of motor	Less than □９０mm

Caution：<u>Please set servo’s torque less than ７ N・m</u>
Please note that strong torque could break the gear.

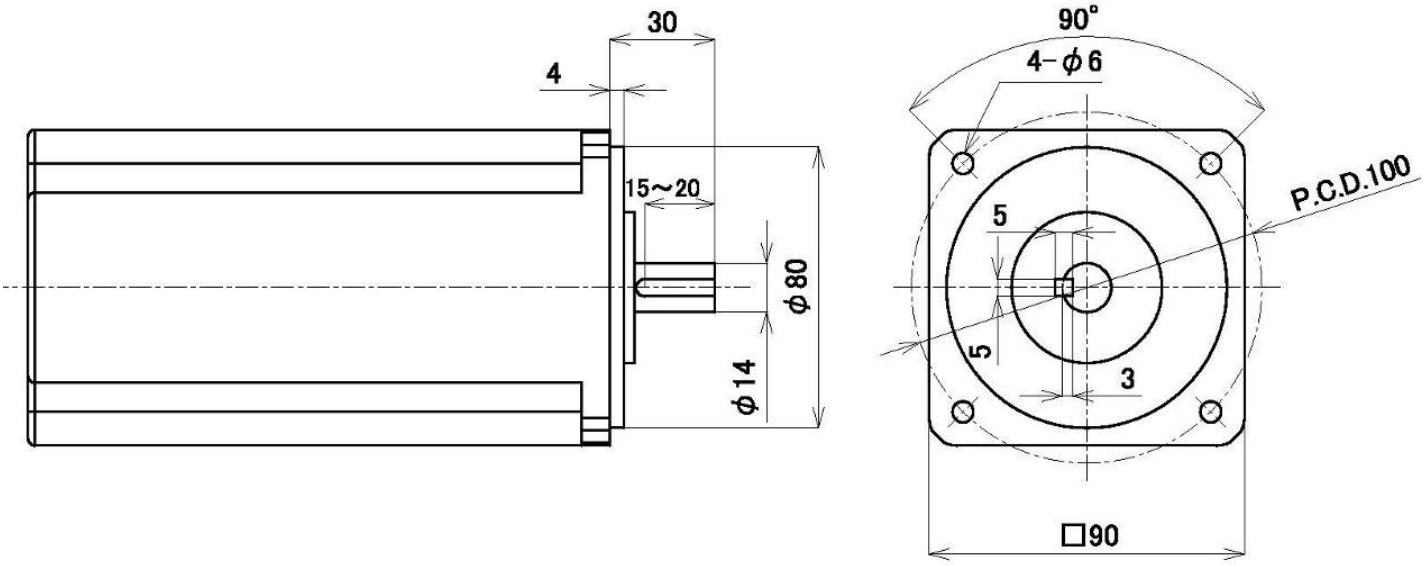

Recommended pressure is 150kgf・2sec/ Output rotation speed 250rpm
(Motor revolution: 2,500rpm)

・Above dress time is rough indication. Please set dressing condition flexibly based on dressed tip result after dressing.

Installation for servo

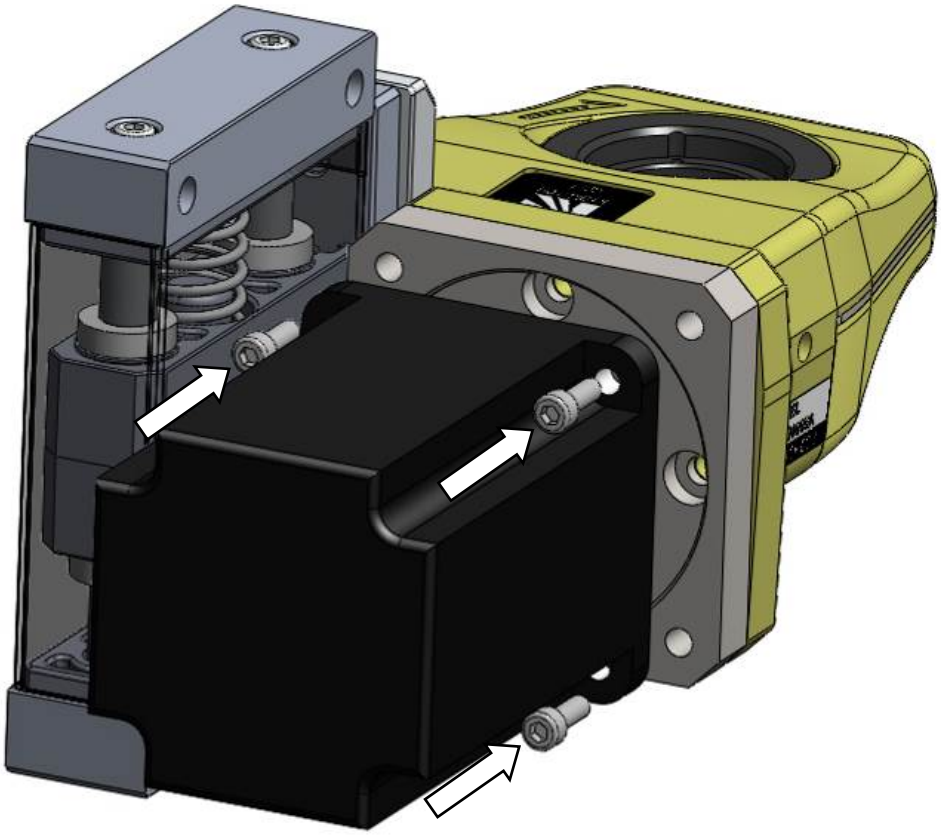

* Please mount the servo motor with 4 pcs of M6 bolts after inserting the servo motor in the motor flange.

Timing Chart

KTW type Cutter (Only clockwise rotation)

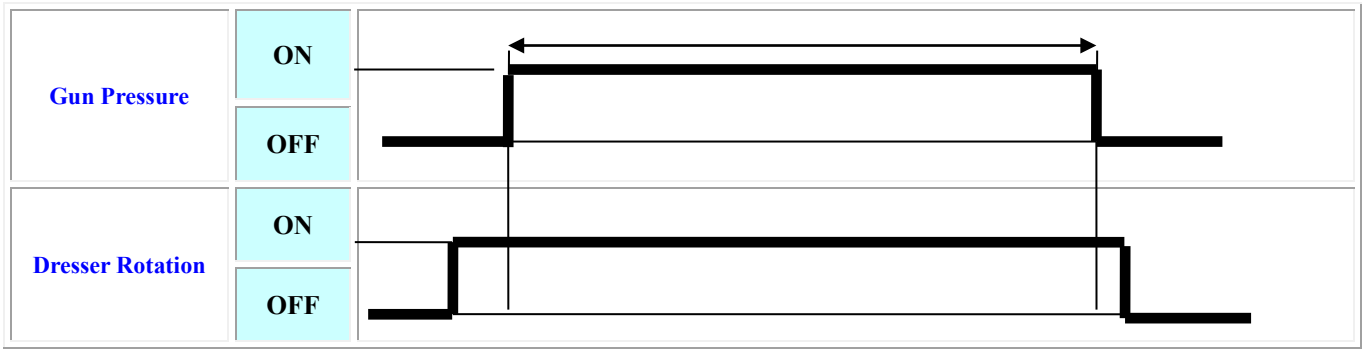

① Start motor to clockwise before Gun press.

② Set the dressing time according to your tip condition. Approximately **MAX 1sec.**

"ATTENSION"

It might cause a chip clogging if a dressing time is more than 1 sec. If dressing time is required more than 1 sec, it is recommended to be dressed multiple times to avoid chip clogging.

For example: If need 2 sec dressing time → 1 sec x 2 times dressing

③ Confirm rotate direction (clockwise).

④ To finish dressing, release the gun pressure while dresser is revolving.

Before operating, make sure that the forms of cutter and tip are fitting.

When dressing is finished and small scrapes are left on the cap tips, both upper and lower tips should be touched with the cutter of revolving dresser before returning to original position.

Drawing

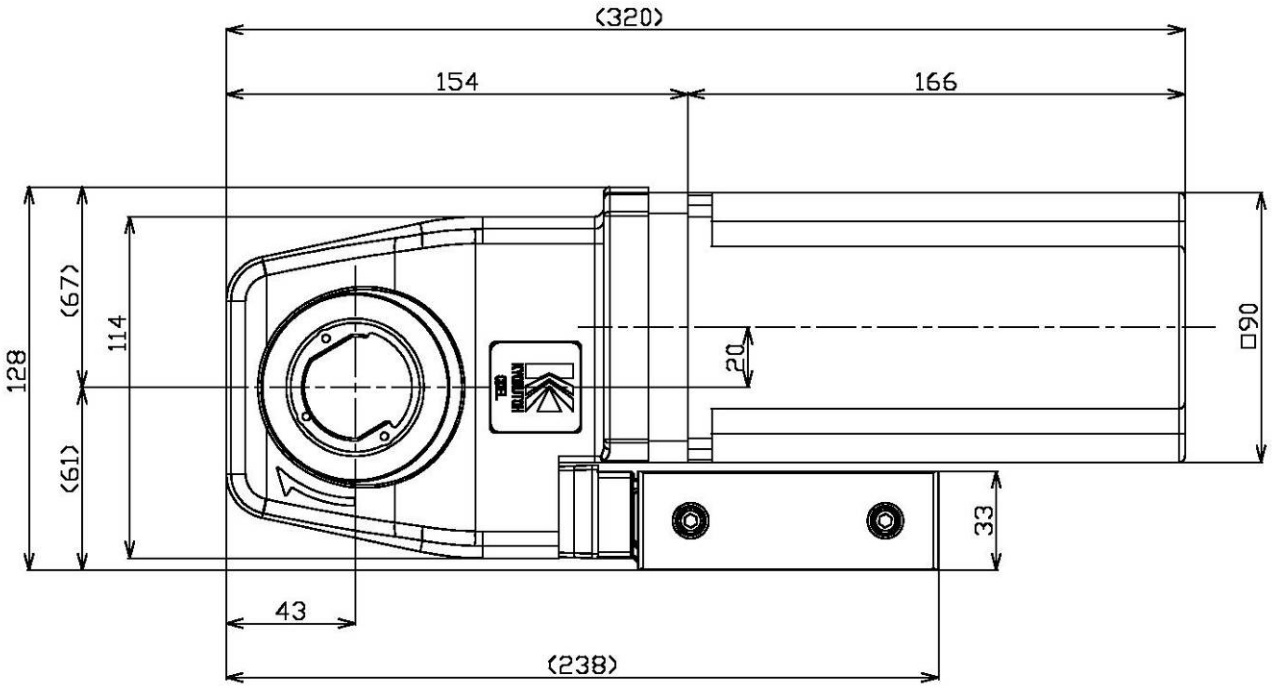
(320)
154
166
128
(67)
114
(61)
20
□90
33
43
(238)

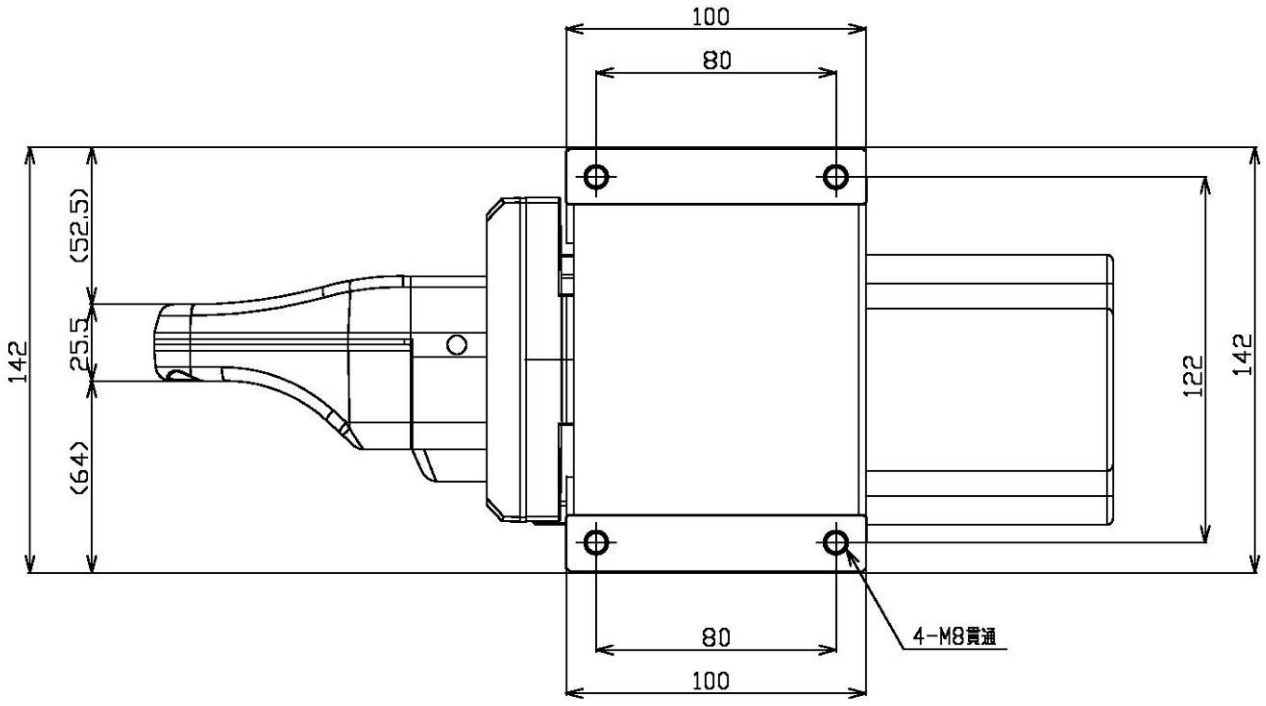
100
80
142
(52.5)
25.5
(64)
122
142
80
100
4-M8貫通

Parts List

No	部 品 名	型 式	個数
1	Dresser	CDEL	1
2	Output Gear	CDEX-R75-01-05B	1
3	Boll Bearing	NTN 6811LLB	1
4	Input Gear	CDEX-R750-01-10B-14	1
5	Boll Bearing	NTN 7205	1
6	Floating Unit	ELFLU-15-02	1
7	Servo Motor (FANUC)	—	1

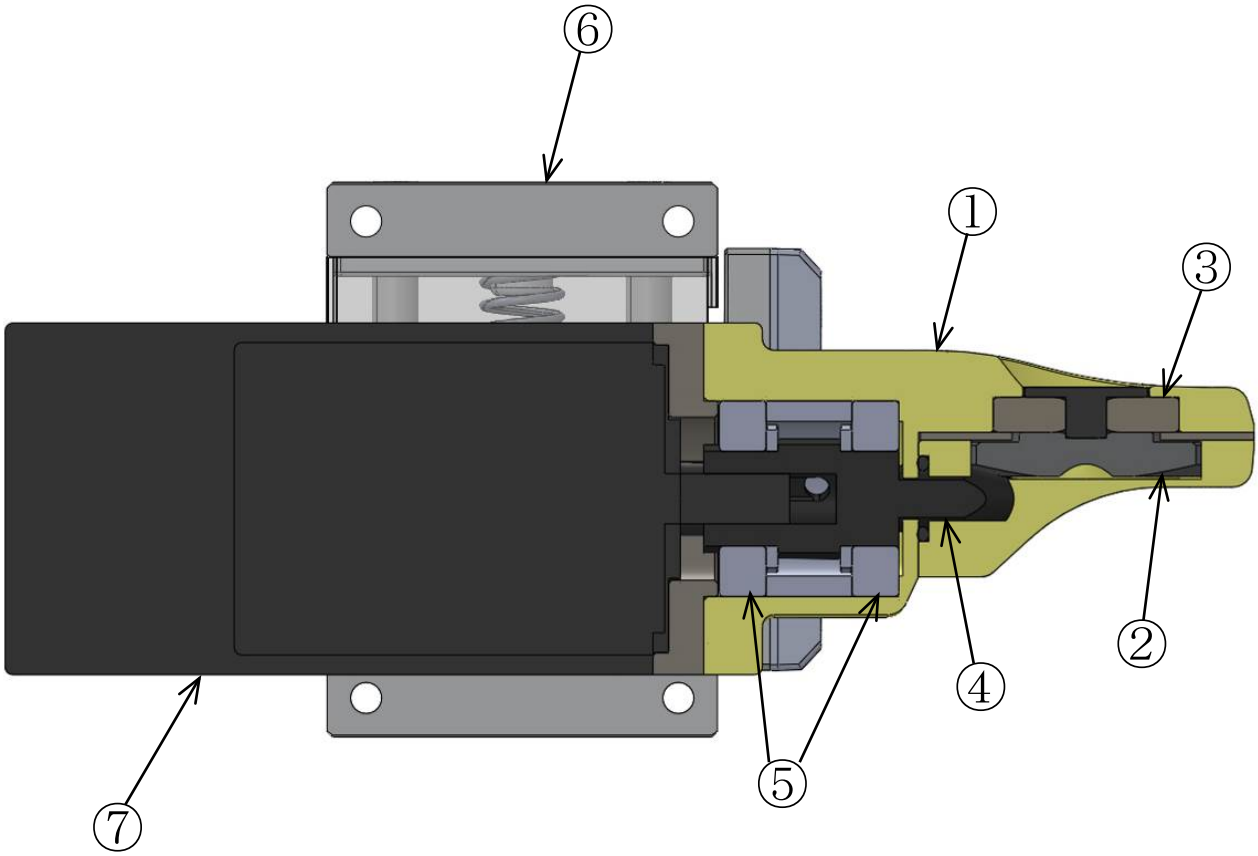

Parts List Floating Unit ＥＬＦＬＵ－１５－０２

No	Name	Type	Qty
1	Floating Block	FLU-15-01-002	1
2	Floating Plate	FLU-15-01-003	2
3	Special Slide shaft	FLU-15-01-005	2
4	Slide Cover	FLU-15-01-006	1
5	Samini Spring	11-2253	2
6	C Ring	STW-21	4
7	Slide Bearing	Y-12LUU	2
8	SUS Cap Bolt	M5×20	4
9	SUS Cap Bolt	M8×15	2
10	Dowel Pin	φ5 h 7-30L	2

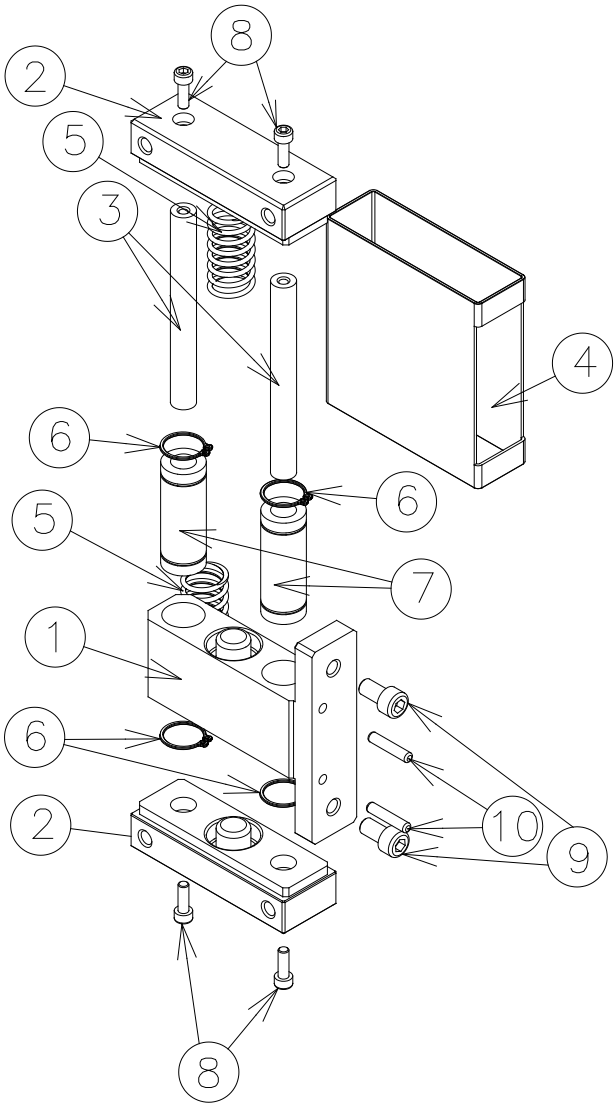

How to Change the Cutter

1 Remove M3 screws from the cutter holder.

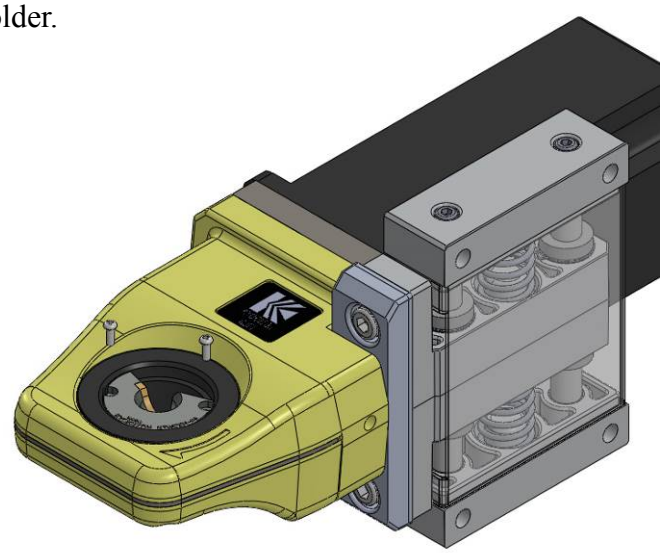

2 Remove the cutter holder from the dresser.

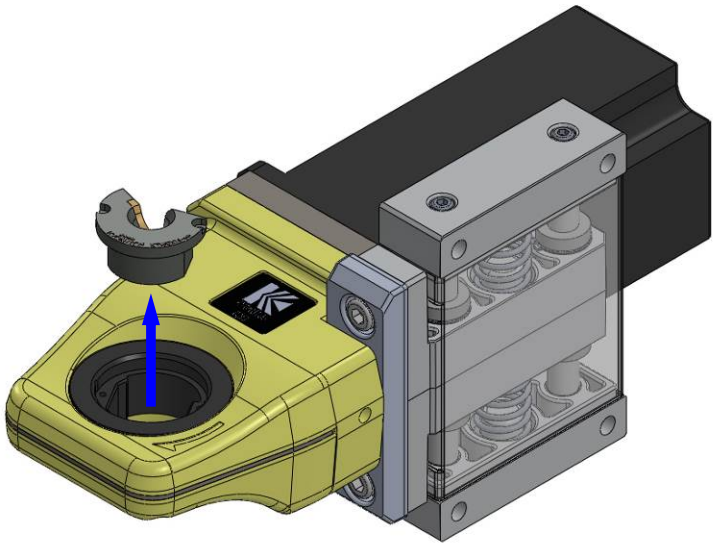

3 To remove the cutter from the cutter holder, loosen the M3 torque screw.

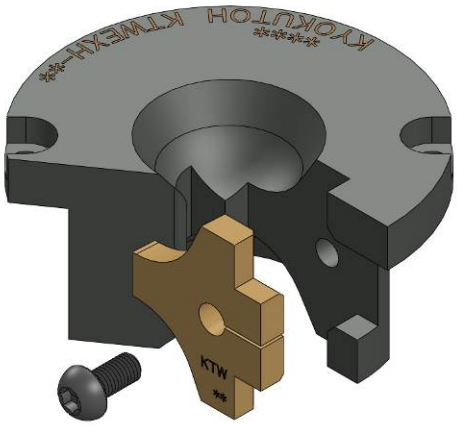

4 Replace a new cutter

Confirm cutter is replaced in the proper direction.

Please install the angle narrows on the side where touches the holder. (Inscription faced up) (Recommended torque for M3 screw is to 10-12kgf.cm).

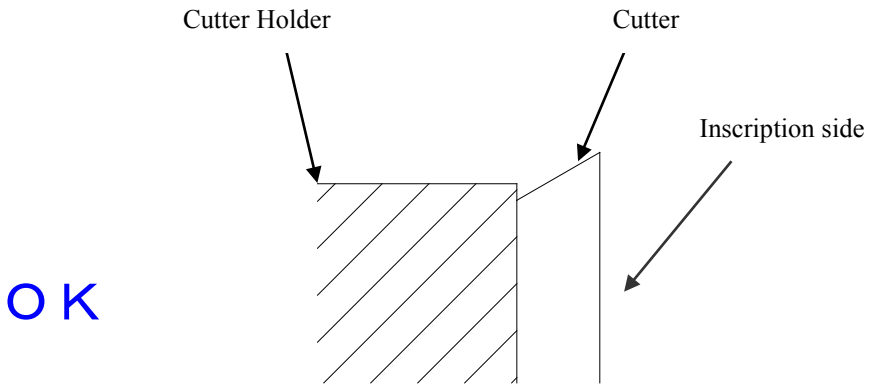

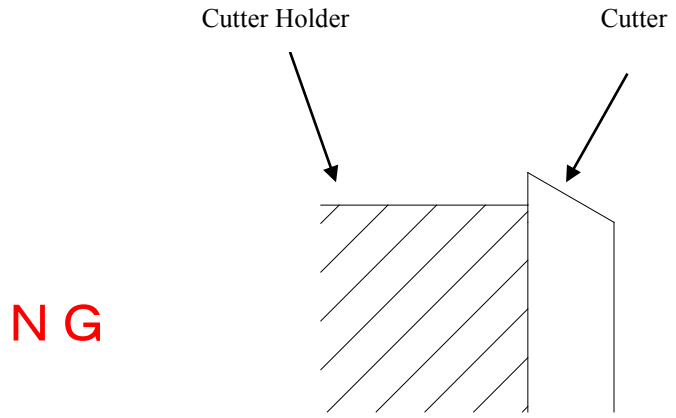

5 To install the cutter holder to the dresser, please do the reverse order from 1 to 2.

Cautions and Confirmation before the Operation

1. Confirm the specification again. (Voltage, option, etc)
2. Make sure of the conformity between the forms of cutter and cap tips.
3. Install the dresser in the place where the operator can not touch it directly during the operation.
4. Make sure dresser and stand bolts are tightened firmly. Also, confirm stand is fixed securely to the floor.
5. When connecting wires to the dresser, operation procedures must be followed with the electric construction standard and also make sure that it is protected from cooling water and spatter.
6. Make sure that the torque setting is proper.
7. Make sure dresser is installed in a location with no spatter and cooling water directly.
8. Confirm the forms of the cutter and cap tip once again before robot teaching.
   Confirm that cutter and holder are securely fastened.
9. Confirm the rotation direction of the KTW cutter is clockwise.
10. Make sure there is neither interference to the dresser except for the cap tips, nor any allophone when robot teaching.
11. When the gun is pressurized, make sure that the electric current is not applied and pressure is within the setting range.
12. Be sure that the shank an cutter are stable and not shaking during dressing. Confirm the quality of the dressed tip.

◆The causes of the failure in dressing.

① The gun is not released while the dresser is revolving. (Scrapes are left on the cap tips)
② The pressure is too high or too low.
③ The forms of the cap tip and the cutter are not fitting.
④ The dressing time is too short .
⑤ The teaching point differ from the dressing one.
⑥ The shape of used cap tips differs from new ones too much.

◆ If the cap tips can't get dressed properly with any other reason, please contact us.

"ATTENSION" for dress teaching

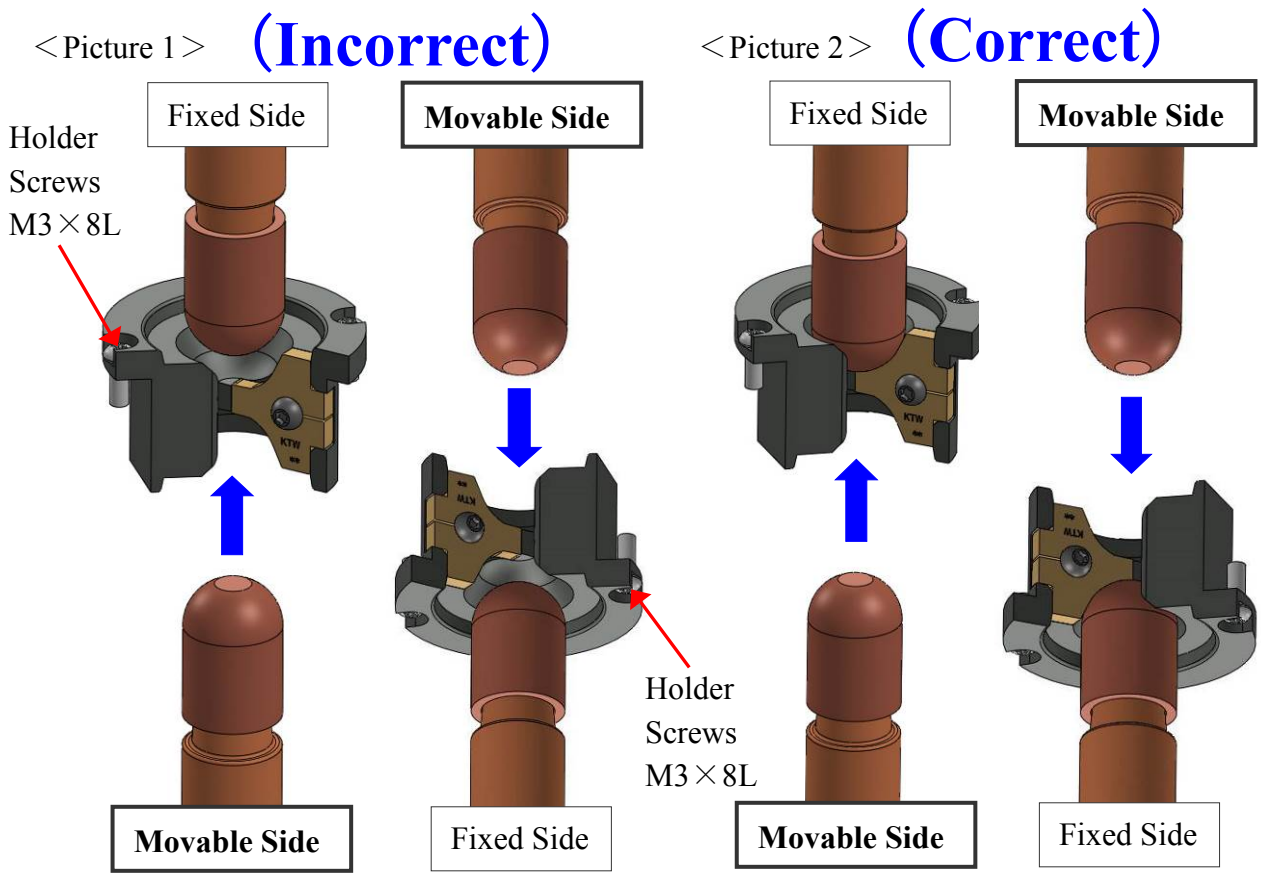

※Please don't make room between a cap on a fixed side and a cutter blade as picture 1 shows. It would cause screw heads broken off and a holder fallen off once the holder is pushed up or pushed down from the bottom side of the holder. Please have a cap touch on a cutter blade as a picture 2 shows for a proper dress teaching.

Abnormality and How to Repair

Abnormal Condition	Cause and Countermeasure
Dresser does not rotate.	* Servo motor is not rotating → Check the power source. * The gun pressure is higher than specified by our company. → Set gun pressure under 1960N(200kgf). * The shapes of the cutter and the cap tip are not fitting, and cling each other. → Check the cutter shape and replace it if necessary.
The motor is running but the cutter does not rotate.	* Gear in the gear box is broken. → Need repair to replace the gear.
The diameter of the dressed cap tip is different from the setting.	* Dressing time is too short. → Set the dressing time to the tip that has been crushed most. * The cutting capability of the cutter has deteriorated or the cutter has been damaged. → Replace the cutter and check the gun pressure. * Dressing point is not proper. → Re-do teaching. * The cutter is not suitable for the cap tip. → Check the cutter shape and replace it if necessary. * Gear in the gear box is broken. → Need repair to replace the gear. * The screw which fastens the cutter to the holder is loosen. → Tighten the screw.
Abnormal sound during dressing.	* Dressing point is not proper. → Re-do teaching. * The cutter has been damaged. → Replace the cutter and check the gun pressure.

Abnormal Condition	Cause and Countermeasure
Dresser leaves burr on the cap tip.	* The control method is not proper. → Release the gun while dresser is revolving, and then stop the dresser. * The shapes of the cutter and the cap tips are not fitting. → Check the cutter shape and replace it, if necessary. * The cutter has been damaged. → Replace the cutter and check the gun pressure. * The screw which fastens the cutter to the holder is loosen. → Tighten the screw.
The tip diameter is not at the center or the designated location.	* The cap tip has got too short. → Replace the cap tip to new one. * Dressing position is not proper. → Re-do teaching.
The point of the cap tip is an oval, not a circle	* The bolts that fasten the motor and the gear box are loosen. → Tighten the bolts. * The bolts that fasten the dresser to the stand are loosen. → Tighten the bolts
Dressing does not complete in the set time	* Dressing time is too short. → Set the dressing time to the cap tip that has been crushed most. * The cutting capability of the cutter has deteriorated or the cutter has been damaged. → Replace the cutter and check the gun pressure. * The cap tip is soften after welding, the point of the cap tip gets widened. → Increase the dressing pressure gradually according to the time of dressing a cap tip when it is with gun voltage valve.
<Remarks> ◆ Please be sure the switch is off when you are checking or replacing parts or the cutter. ◆ When the dresser is out of order, please contact us immediately. Do not take the dresser apart. It would not be able to repair if you disassemble it.	

Consumption Parts List

Outsourced Product	* Output Gear Bearing for KTW Type: **NTN 6811LLB** Replacement Qty: 1 pcs * Input Gear Bearing for KTW Type: **NTN 7205** Replacement Qty: 2pcs Replacement cycle ※ 2 years
	* Input Gear for KTWEXH holder Type: **CDEX-R75-01-10B-14** Replacement Qty: 1 pcs Replacement cycle ※ 2 years
	* Output Gear KTWEXH holder Type: **CDEX-R750-01-05B** (With Ring stopper **CDEX-R750-01-04B**) Replacement Qty: 1pcs Replacement cycle ※ 2 years
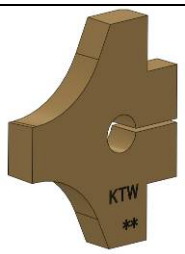	* Cutter Type: **KTW－＊＊** Replacement Qty: 1 pcs ※ Replacement cycle 10,000 sec
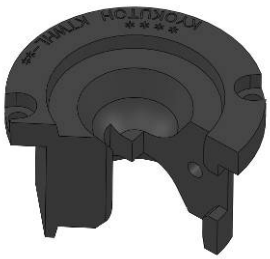	* Cutter Holder Type **KTWHL－＊＊** Replacement Qty: 1 pcs ※ Replacement cycle 30,000 sec

Contacts

Please contact us if there is any problem with our product.



KYOKUTOH CO,. LTD
181-1, Nakayashiki, Orido-cho, Nisshin, Aichi 470-0115 Japan
TEL: +81-561-72-8811 FAX: +81-561-72-8821
E-Mail: sales@kyokutoh.com
http://www.kyokutoh.com
KANTO SALES OFFICE
TEL +81-49-277-4324 FAX: +81-49-277-4325
HIROSHIMA SALES OFFICE
TEL +81-82-569-6227 FAX: +81-82-569-6228



CHANGER & DRESSER CORPORATION
1527 ITC Way, Anniston, AL 36207 U.S.A
TEL +1-256-832-4392 FAX +1-256-832-4393
http://www.changer-dresser.com



KYOKUTOH CHINA
73 Huagang Street, Xiuquan Town, Huadu District,
GuangZhou City, GuangDong Province, China.
TEL +86-20-86980880 FAX +86-20-86980890
http://www.kyokutoh.com.cn



KYOKUTOH THAILAND
339/2 Soi Phattanakarn 69, Phattanakarn Road, Prawet, Bangkok 10250 THAILAND
TEL: +66-272-162-82 FAX: +66-272-162-84
http://www.kyokutoh.co.th



KYOKUTOH KOREA
117, Tawon TAKRA II Industry Center, Dongsan-ro 76,
Danwon-gu, Ansan-si, Gyeonggi-do, Korea 15434
TEL +82-31-414-8730 FAX +82-31-414-8731



KYOKUTOH EUROPE
Radlkoferstr. 2 81373 Muenchen, Germany
TEL +49-89-7411-85313 FAX +49-89-7411-85315
