POWERTECH® 4.5L/6.8L PowerTech Plus™ 6.8L Diesel Engines Base Engine

DCT

TECHNICAL MANUAL
PowerTech Plus™ 4.5L & 6.8L Diesel Engines— Base Engine

CTM104 30JUN05 (ENGLISH)

For complete service information also see:

POWERTECH™ **Diesel Engines—Mechanical Fuel Systems CTM207**
POWERTECH™ **Diesel Engines—Level 4 Electronic Fuel Systems with Bosch VP44 Pump CTM170**
POWERTECH™ **Diesel Engines—Level 12 Electronic Fuel Systems with Stanadyne DE10 Pump CTM331**
POWERTECH™**Diesel Engines—Level 1 Electronic Fuel Systems with Delphi/Lucas DP201 Pump CTM284**
POWERTECH™ **Diesel Engines—Level 11 Electronic Fuel Systems with Denso HPCR CTM220**
POWERTECH™ **Diesel Engines and PowerTech Plus™—Level 14 Electronic Fuel Systems with Denso HPCR. CTM320**
Alternators and Starter Motors. CTM77
OEM Engine Accessories . . . . . CTM67 (English Only)

John Deere Power Systems

LITHO IN U.S.A.

Doosan purchased Bobcat Company from Ingersoll-Rand Company in 2007. Any reference to Ingersoll-Rand Company or use of trademarks, service marks, logos, or other proprietary identifying marks belonging to Ingersoll-Rand Company in this manual is historical or nominative in nature, and is not meant to suggest a current affiliation between Ingersoll-Rand Company and Doosan Company or the products of either.

CTM104

Revised (09-12)

Introduction

Forward

This manual is written for an experienced technician. Essential tools required in performing certain service work are identified in this manual and are recommended for use.

This manual (CTM104) covers only the base engine. It is one of seven volumes on 4.5L and 6.8L engines. The following six companion manuals cover fuel system and electronics repair, operation and diagnostics:

- CTM207—Mechanical Fuel Systems
- CTM170—Level 4 Electronic Fuel Systems with Bosch VP44 Pump
- CTM331—Level 12 Electronic Fuel Systems with Stanadyne DE10 Pump
- CTM284—Level 1 Electronic Fuel Systems with Delphi/Lucas DP201 Pump
- CTM220—Level 11 Electronic Fuel Systems with Denso High Pressure Common Rail
- CTM320—Level 14 Electronic Fuel Systems with Denso High Pressure Common Rail

Other manuals will be added in the future to provide additional information on electronic fuel systems as needed.

Live with safety: Read the safety messages in the introduction of this manual and the cautions presented throughout the text of the manual.

This is the safety-alert symbol. When you see this symbol on the machine or in this manual, be alert to the potential for personal injury.

Use this component technical manual in conjunction with the machine technical manual. An application listing in Section 01, Group 001 identifies product-model/component type-model relationship. See the machine technical manual for information on component removal and installation, and gaining access to the components.

Information is organized in sections and groups for the various components requiring service instruction. Section 05 summarizes all applicable essential tools, service equipment and tools, other materials needed to do the job, and service parts kits. Section 06 summarizes all specifications, wear tolerances, and torque values.

Before beginning repair on an engine, clean the engine and mount on a repair stand. (See Section 02, Group 010.)

This manual contains SI Metric units of measure followed immediately by the U.S. customary units of measure. Most hardware on these engines is metric sized.

Some components of this engine may be serviced without removing the engine from the machine. Refer to the specific machine technical manual for information on components that can be serviced without removing the engine from the machine and for engine removal and installation procedures.

Read each block of material completely before performing service to check for differences in procedures or specifications. Follow only the procedures that apply to the engine model number you are working on. If only one procedure is given, that procedure applies to all the engines in the manual.

CALIFORNIA PROPOSITION 65 WARNING
Diesel engine exhaust and some of its constituents are known to the State of California to cause cancer, birth defects and other reproductive harm.

DPSG,OUO1004,2767 –19–15MAY02–1/1

John Deere Dealers

The changes listed below make your CTM obsolete. Repair, operation and diagnostics on 4.5L and 6.8L diesel engines is now covered in seven manuals. **Discard CTM104 dated 01Apr05 and replace with this new manual. Also refer to the following manuals:**

- CTM104—4.5L and 6.8L Diesel Engines—Base Engine
- CTM207—4.5L and 6.8L Diesel Engines—Mechanical Fuel Systems
- CTM170—4.5L and 6.8L Diesel Engines—Level 4 Electronic Fuel Systems with Bosch VP44 Pump
- CTM331—4.5L and 6.8L Diesel Engines—Level 12 Electronic Fuel Systems with Stanadyne DE10 Pump
- CTM284—4.5L and 6.8L Diesel Engines—Level 1 Electronic Fuel Systems with Delphi/Lucas DP201 Pump
- CTM220—4.5L and 6.8L Diesel Engines—Level 11 Electronic Fuel Systems with Denso High Pressure Common Rail
- CTM320—4.5L and 6.8L Diesel Engines—Level 14 Electronic Fuel Systems with Denso High Pressure Common Rail

Also, copy this page listing changes and route through your Service Department.

SECTION 01—GROUP 001 (Engine Identification)

- Updated engine application charts.

SECTION 01—GROUP 002 (Fuels, Lubricants and Coolants)

- Revised diesel engine oil guidelines.
- Revised engine coolant guidelines.

SECTION 02—GROUP 010 (Engine Rebuild)

- Revised engine disassembly/assembly procedure.

SECTION 02—GROUP 060 (Lubrication System)

- Added illustrations.

SECTION 02—GROUP 070 (Cooling System)

- Updated illustrations.

SECTION 02—GROUP 080 (Air Intake and Exhaust System)

- Added variable geometry turbocharger actuator linkage procedures.

SECTION 02—GROUP 090 (Fuel System)

NOTE: Repair procedures for fuel systems have been moved to Section 02, Group 090 in six other technical manuals: CTM207—Mechanical Fuel Systems, CTM170—Level 4 Electronic Fuel Systems with Bosch VP44 Pump, CTM331—Level 12 Electronic Fuel Systems with Stanadyne DE10 Pump, CTM284—Level 1 Electronic Fuel Systems with Delphi/Lucas DP201 Pump, CTM220—Level 11 Electronic Fuel Systems with Denso High Pressure Common Rail and CTM320—Level 14 Electronic Fuel Systems with Denso High Pressure Common Rail.

SECTION 02—GROUP 100 (Starting and Charging Systems)

- Starting and charging systems are covered in this section/group.

SECTION 03—GROUP 120 (Base Engine Operation)

- Added EGR system operation.

SECTION 04—GROUP 150 (Observable Diagnostics and Tests)

NOTE: Fuel system testing and diagnostics has been moved to Section 04, Group 150 in five other technical manuals: CTM207—Mechanical Fuel Systems, CTM170—Level 4 Electronic Fuel Systems with Bosch VP44 Pump, CTM331—Level 12 Electronic Fuel Systems with Stanadyne DE10 Pump, CTM284—Level 1 Electronic Fuel Systems with Delphi/Lucas DP201 Pump, CTM220—Level 11 Electronic Fuel Systems with Denso High Pressure Common Rail and CTM320—Level 14 Electronic Fuel Systems with Denso High Pressure Common Rail.

SECTION 5 (Tools and Other Materials)

- All essential tools, service tools, dealer fabricated tools and other materials listed throughout this manual are consolidated in this section for ease of reference.

SECTION 6 (Specifications)

- All repair, test and diagnostic specifications listed throughout this manual are consolidated in this section for ease of reference.

OUO1080,000023A –19–12JUN02–2/2

POWERTECH® 4.5L Engine—Tier 1/Stage I

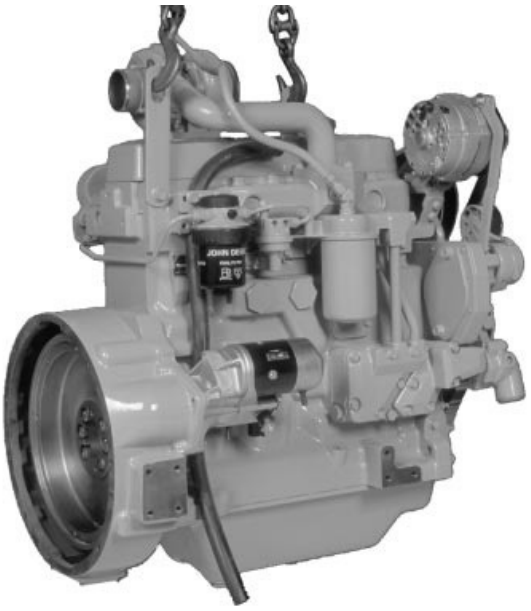

RG7636 –UN–23NOV97

3/4 Right Rear View

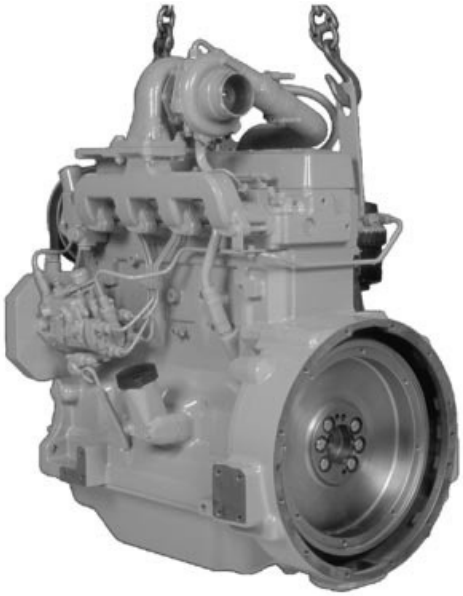

RG7638 –UN–23NOV97

3/4 Left Rear View

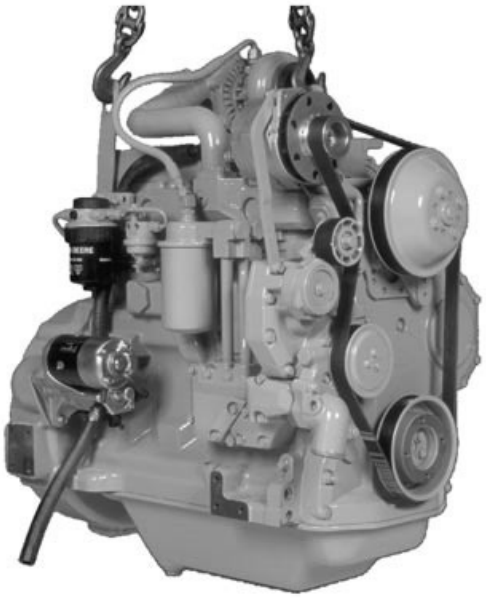

RG7639 –UN–23NOV97

3/4 Right Front View

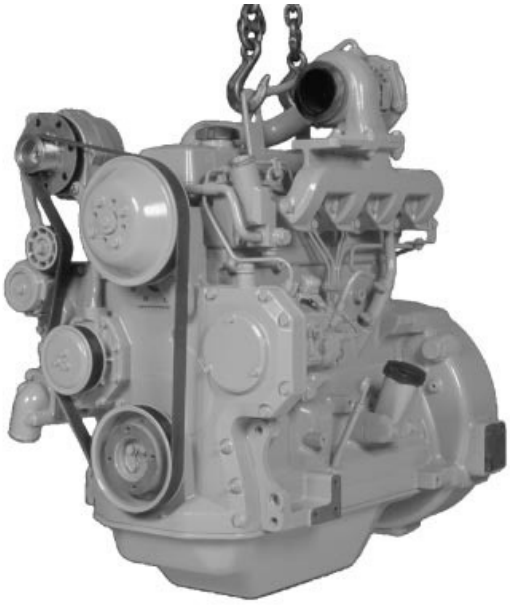

RG7637 –UN–23NOV97

3/4 Left Front View

***POWERTECH** is a registered trademark of Deere & Company*

DPSG,OUO1004,129 –19–15MAY02–1/1

POWERTECH® 4.5L Engine—Tier 2/Stage II

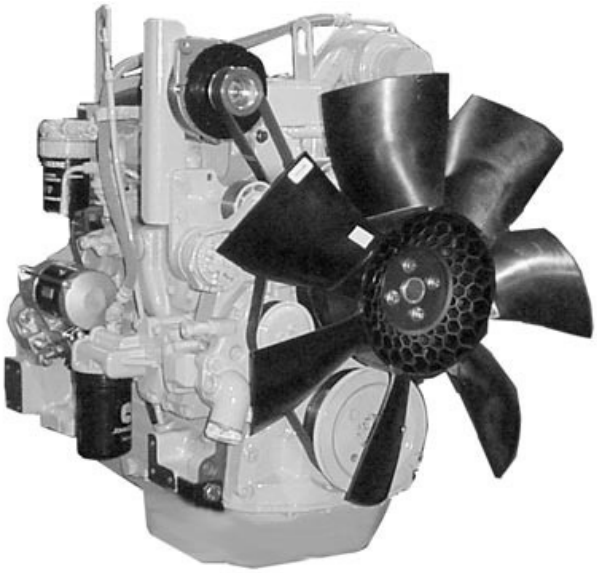

RG11932 –UN–06NOV01

3/4 Right Front View—Two-Valve Head Engine

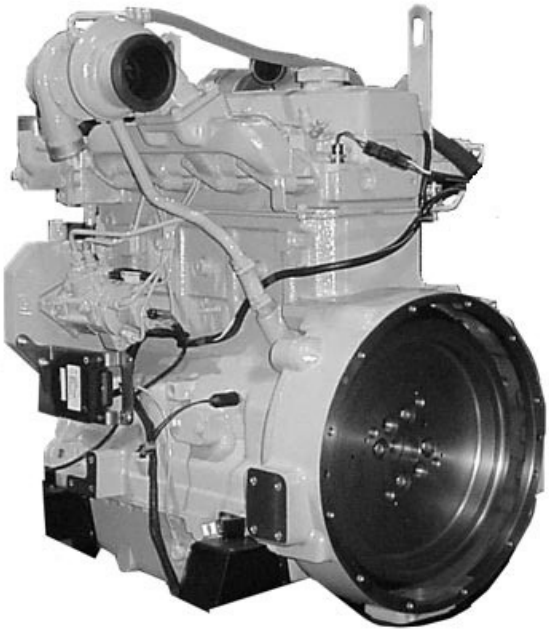

RG11931 –UN–06NOV01

3/4 Left Rear View—Two-Valve Head Engine

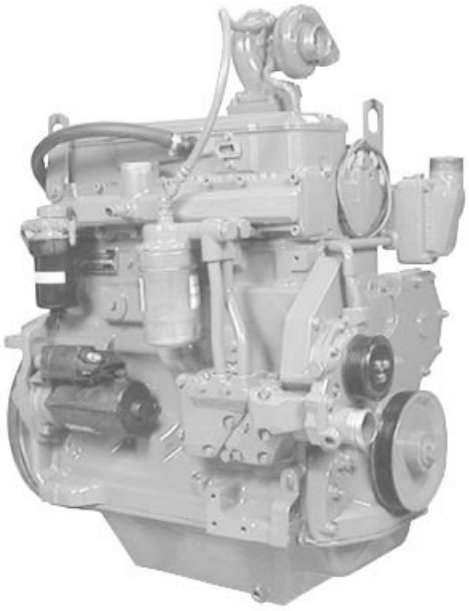

RG13617A –UN–18MAY04

3/4 Right Front View—Four-Valve Head Engine



RG13618A –UN–18MAY04

3/4 Left Rear View—Four-Valve Head Engine

***POWERTECH** is a registered trademark of Deere & Company*

OUO1080,0000238 –19–03JUN04–1/1

POWERTECH® 6.8L Engine—Tier 1/Stage I

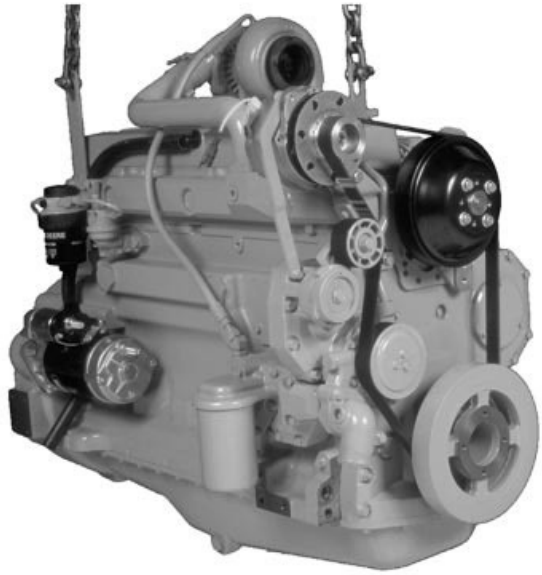

RG7641 –UN–23NOV97

3/4 Right Front View

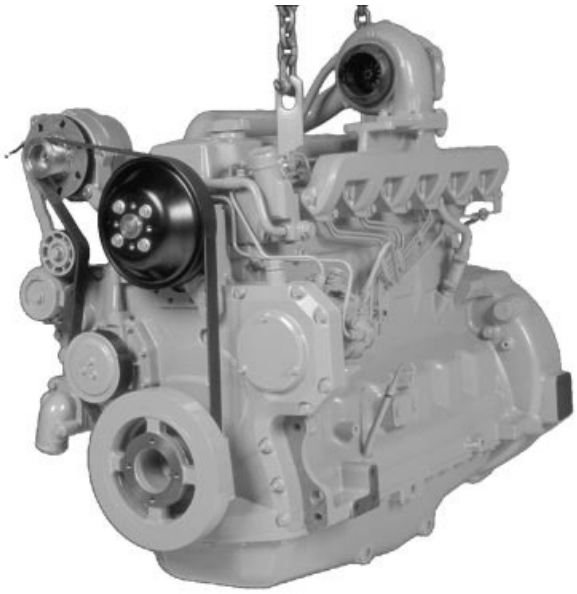

RG7640 –UN–23NOV97

3/4 Left Front View

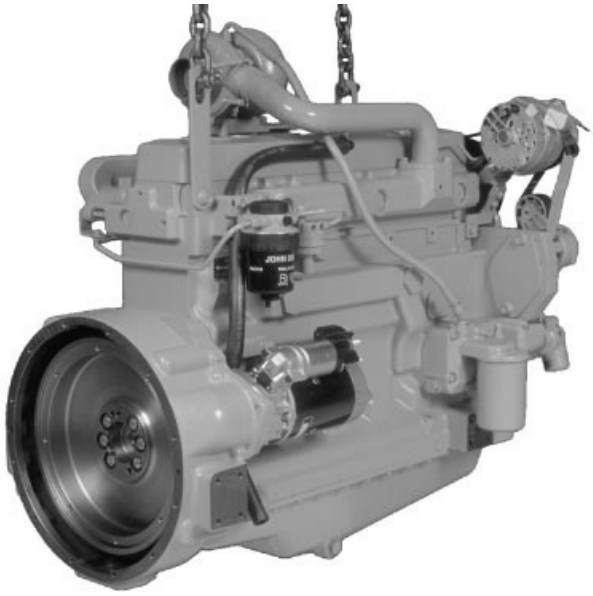

RG7643 –UN–23NOV97

3/4 Right Rear View

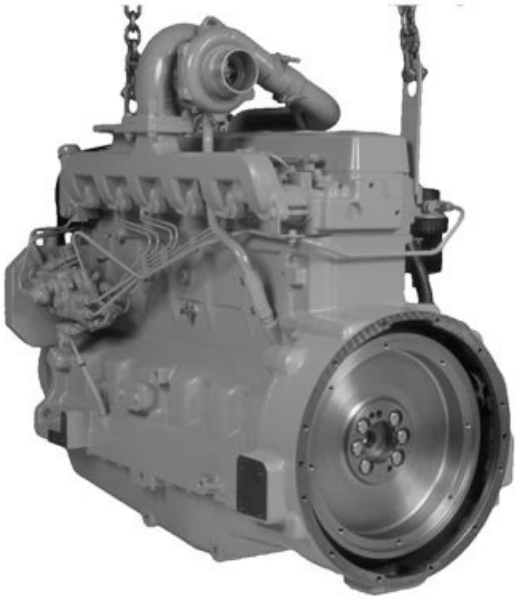

RG7642 –UN–23NOV97

3/4 Left Rear View

***POWERTECH** is a registered trademark of Deere & Company*

DPSG,OUO1004,130 –19–15MAY02–1/1

POWERTECH® 6.8L Engine—Tier 2/Stage II

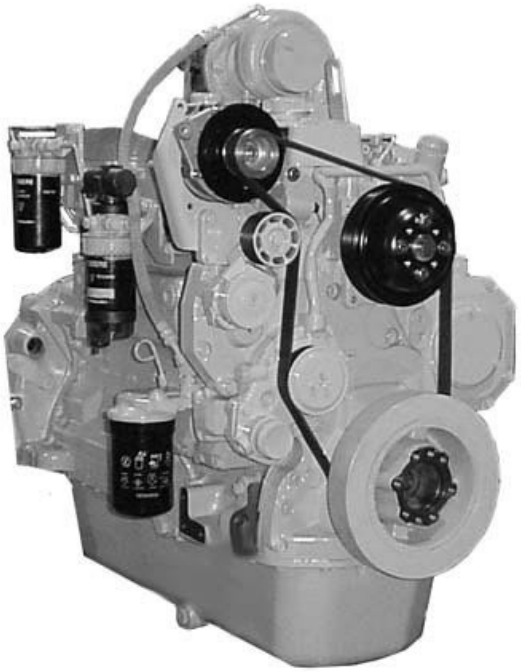

RG11934 –UN–24OCT01

3/4 Right Front View—Two-Valve Head Engine



RG11933 –UN–24OCT01

3/4 Left Rear View—Two-Valve Head Engine

***POWERTECH** is a registered trademark of Deere & Company*

OUO1080,0000239 –19–06JUN02–1/1

POWERTECH® 6.8L Engine With Electronic Fuel System—Tier 2/Stage II



RG12199 –UN–24MAY02

6068HF475 Four-Valve Engine (Level 11 Electronic Fuel System with Denso High Pressure Common Rail)

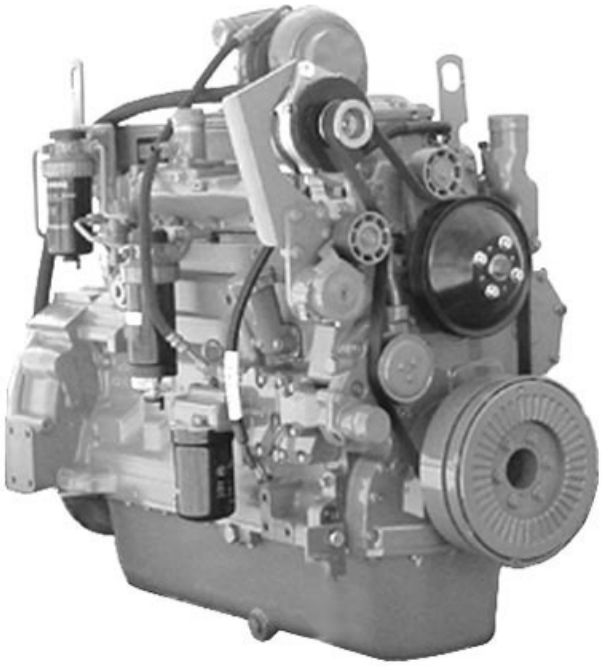

RG12200 –UN–24MAY02

6068HF475 Four-Valve Engine

POWERTECH *is a registered trademark of Deere & Company*

OUO1083,00005FC –19–17DEC03–1/1

POWERTECH® 6.8L Engine With Electronic Fuel System—Tier 3/Stage IIIA

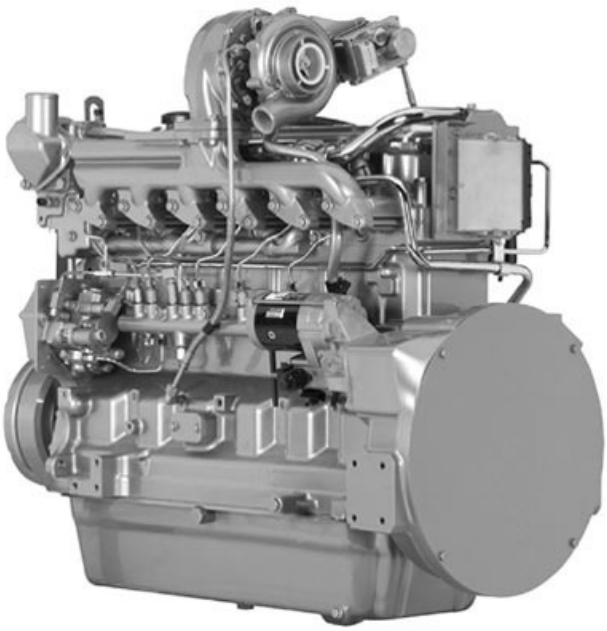

RG13547 –UN–11NOV04

6068HF485 Engine Shown (Electronic Fuel System With Denso High Pressure Common Rail)



RG13546 –UN–11NOV04

6068HF485 Shown

***POWERTECH** is a registered trademark of Deere & Company*

OUO1083,00005FC –19–17DEC03–1/1

Contents

SECTION 01—General Information
- Group 000—Safety
- Group 001—Engine Identification and Application Charts
- Group 002—Fuels, Lubricants and Coolants

SECTION 02—Repair and Adjustments
- Group 010—Engine Rebuild
- Group 020—Cylinder Head and Valves (Two-Valve Head Engines)
- Group 021—Cylinder Head and Valves (Four-Valve Head Engines)
- Group 030—Cylinder Block, Liners, Pistons and Rods
- Group 040—Crankshaft, Main Bearings and Flywheel
- Group 050—Camshaft, Balancer Shafts and Timing Gear Train
- Group 060—Lubrication System
- Group 070—Cooling System
- Group 080—Air Intake and Exhaust System
- Group 090—Fuel System
- Group 100—Starting and Charging Systems

SECTION 03—Theory of Operation
- Group 120—Base Engine Operation

SECTION 04—Diagnostics
- Group 150—Observable Diagnostics and Tests

SECTION 05—Tools and Other Materials
- Group 170—Repair Tools and Other Materials
- Group 180—Diagnostic Service Tools
- Group 190—Dealer Fabricated Service Tools

SECTION 06—Specifications
- Group 200—Repair and General OEM Specifications
- Group 210—Diagnostic Specifications

All information, illustrations and specifications in this manual are based on the latest information available at the time of publication. The right is reserved to make changes at any time without notice.

COPYRIGHT © 2005
DEERE & COMPANY
Moline, Illinois
All rights reserved
A John Deere ILLUSTRUCTION® Manual
Previous Editions
Copyright © 1996, 1998, 2000, 2002, 2004

Section 01
General Information

Contents

Page

Group 000—Safety 01-000-1

Group 001—Engine Identification and Application Charts
Engine Model Designation. 01-001-1
Engine Serial Number Plate Information 01-001-2
OEM Engine Option Code Label 01-001-3
Information Relative to Emissions Regulations 01-001-4
Engine Application Charts 01-001-5

Group 002—Fuels, Lubricants and Coolants
Diesel Fuel - Non-Certified, Tier I and Tier 2/Stage II Engines 01-002-1
Diesel Fuel - Tier 3/Stage IIIA Engines 01-002-2
Bio-Diesel Fuel 01-002-3
Lubricity of Diesel Fuel 01-002-4
Dieselscan Fuel Analysis. 01-002-4
Diesel Engine Break-In Oil 01-002-5
Diesel Engine Oil—Non-Certified and Tier 1 Certified Engines 01-002-6
Diesel Engine Oil—Tier 2/Stage II Certified Engines 01-002-7
Diesel Engine Oil —Tier 3/Stage IIIA Certified Engines 01-002-8
OILSCAN®, OILSCAN Plus®, COOLSCAN™ and COOLSCAN PLUS™ . . .01-002-9
Oil Filters. 01-002-9
Grease 01-002-10
Diesel Engine Coolant. 01-002-11
Additional Information About Diesel Engine Coolants and Supplemental Coolant Additives 01-002-13
Testing Diesel Engine Coolant 01-002-14
Supplemental Coolant Additives 01-002-15
Operating in Warm Temperature Climates . .01-002-15
Flush and Service Cooling System 01-002-16
Disposing of Coolant 01-002-17

Handle Fluids Safely—Avoid Fires

When you work around fuel, do not smoke or work near heaters or other fire hazards.

Store flammable fluids away from fire hazards. Do not incinerate or puncture pressurized containers.

Make sure machine is clean of trash, grease, and debris.

Do not store oily rags; they can ignite and burn spontaneously.



TS227 –UN–23AUG88

DX,FLAME –19–29SEP98–1/1

Handle Starting Fluid Safely

CAUTION: On later engines equipped with glow plugs, DO NOT USE ETHER STARTING FLUID. Use of starting fluids could cause explosion and possibility of personal injury.

Starting fluid is highly flammable.

Keep all sparks and flame away when using it. Keep starting fluid away from batteries and cables.

To prevent accidental discharge when storing the pressurized can, keep the cap on the container, and store in a cool, protected location.

Do not incinerate or puncture a starting fluid container.



TS1356 –UN–18MAR92

DX,FIRE3 –19–17DEC03–1/1

01
000
2

Service Cooling System Safely

Explosive release of fluids from pressurized cooling system can cause serious burns.

Shut off engine. Only remove filler cap when cool enough to touch with bare hands. Slowly loosen cap to first stop to relieve pressure before removing completely.



TS281 –UN–23AUG88

DX,RCAP –19–04JUN90–1/1

Install Fan Guards

Rotating cooling system fans can cause serious injury.

Keep fan guards in place at all times during engine operation. Wear close fitting clothes. Stop engine and be sure fan is stopped before making adjustments or connections, or cleaning near the front of the engine.



Rotating Fan

TS677 –UN–21SEP89

OUO1083,00005FE –19–17DEC03–1/1

Avoid Hot Parts

Avoid skin contact with exhaust manifolds, turbochargers and mufflers. Keep flammable materials clear of the turbocharger.

External dry exhaust parts become very hot during operation. Turbochargers may reach temperatures as high as 500°C (932°F) under full load, and naturally aspired exhaust manifolds may reach 600°C (1112°F) under full load. This may ignite paper, cloth or wooden materials. Parts on engines that have been at full load and reduced to no load idle will maintain approximately 150°C (302°F).

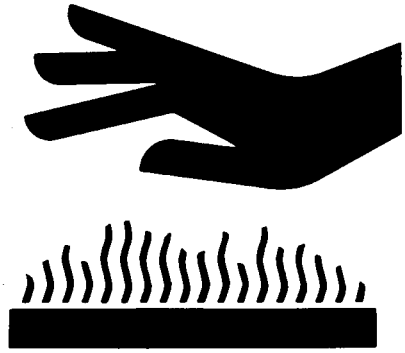

Hot Surface

TS271 –UN–23AUG88

OUO1083,00005FF –19–17DEC03–1/1

Prevent Battery Explosions

Keep sparks, lighted matches, and open flame away from the top of battery. Battery gas can explode.

Never check battery charge by placing a metal object across the posts. Use a volt meter or hydrometer.

Do not charge a frozen battery; it may explode. Warm battery to 16°C (60°F).



TS204 –UN–23AUG88

DX,SPARKS –19–03MAR93–1/1

Prepare for Emergencies

Be prepared if a fire starts.

Keep a first aid kit and fire extinguisher handy.

Keep emergency numbers for doctors, ambulance service, hospital, and fire department near your telephone.

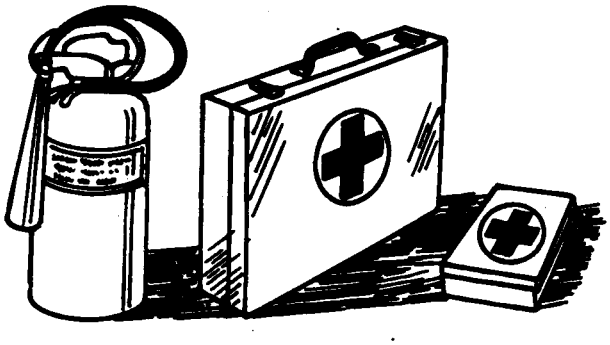

TS291 –UN–23AUG88

DX,FIRE2 –19–03MAR93–1/1

01
000
4

Handling Batteries Safely



TS204 –UN–23AUG88

CAUTION: Battery gas can explode. Keep sparks and flames away from batteries. Use a flashlight to check battery electrolyte level.

Never check battery charge by placing a metal object across the posts. Use a voltmeter or hydrometer.

Always remove grounded (-) battery clamp first and replace it last.

CAUTION: Sulfuric acid in battery electrolyte is poisonous. It is strong enough to burn skin, eat holes in clothing, and cause blindness if splashed into eyes.

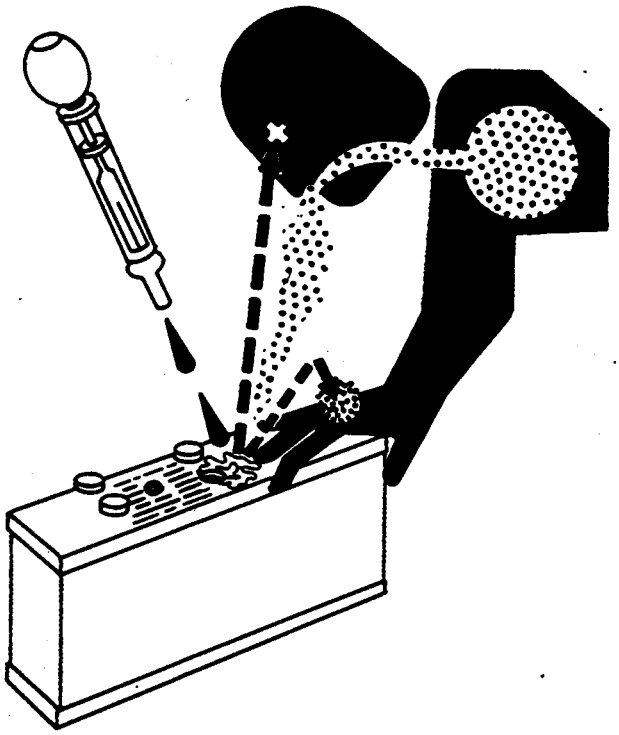

TS203 –UN–23AUG88

Avoid the hazard by:

1. **Filling batteries in a well-ventilated area.**
2. **Wearing eye protection and rubber gloves.**
3. **Avoiding breathing fumes when electrolyte is added.**
4. **Avoiding spilling or dripping electrolyte.**
5. **Use proper jump start procedure.**

If you spill acid on yourself:

1. **Flush your skin with water.**
2. **Apply baking soda or lime to help neutralize the acid.**
3. **Flush your eyes with water for 15—30 minutes. Get medical attention immediately.**

If acid is swallowed:

1. **Do not induce vomiting.**
2. **Drink large amounts of water or milk, but do not exceed 2 L (2 quarts).**
3. **Get medical attention immediately.**

WARNING: Battery posts, terminals, and related accessories contain lead and lead compounds, chemicals known to the State of California to cause cancer and reproductive harm. **Wash hands after handling.**

DPSG,OUO1004,2758 –19–11MAY00–1/1

Avoid High-Pressure Fluids

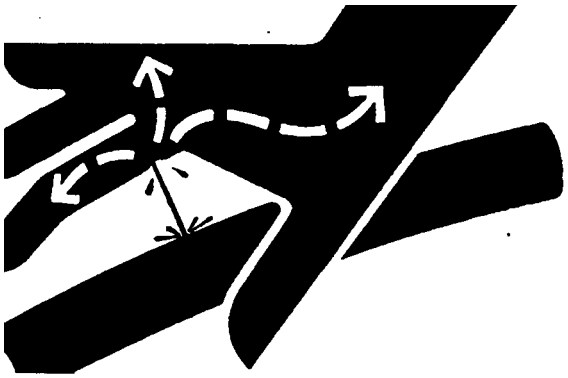

X9811 –UN–23AUG88

Escaping fluid under pressure can penetrate the skin causing serious injury.

Avoid the hazard by relieving pressure before disconnecting hydraulic or other lines. Tighten all connections before applying pressure.

Search for leaks with a piece of cardboard. Protect hands and body from high pressure fluids.

If an accident occurs, see a doctor immediately. Any fluid injected into the skin must be surgically removed within a few hours or gangrene may result. Doctors unfamiliar with this type of injury should reference a knowledgeable medical source. Such information is available from Deere & Company Medical Department in Moline, Illinois, U.S.A.

DX,FLUID –19–03MAR93–1/1

Wear Protective Clothing

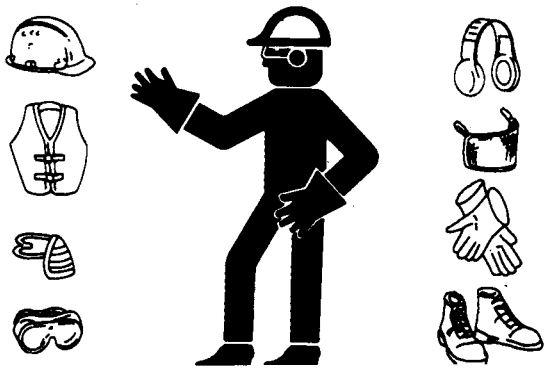

TS206 –UN–23AUG88

Wear close fitting clothing and safety equipment appropriate to the job.

Prolonged exposure to loud noise can cause impairment or loss of hearing.

Wear a suitable hearing protective device such as earmuffs or earplugs to protect against objectionable or uncomfortable loud noises.

Operating equipment safely requires the full attention of the operator. Do not wear radio or music headphones while operating machine.

DX,WEAR –19–10SEP90–1/1

01
000
6

Service Machines Safely

Tie long hair behind your head. Do not wear a necktie, scarf, loose clothing, or necklace when you work near machine tools or moving parts. If these items were to get caught, severe injury could result.

Remove rings and other jewelry to prevent electrical shorts and entanglement in moving parts.

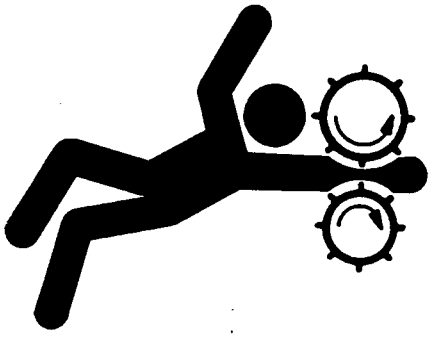

TS228 –UN–23AUG88

DX,LOOSE –19–04JUN90–1/1

Work In Ventilated Area

Engine exhaust fumes can cause sickness or death. If it is necessary to run an engine in an enclosed area, remove the exhaust fumes from the area with an exhaust pipe extension.

If you do not have an exhaust pipe extension, open the doors and get outside air into the area

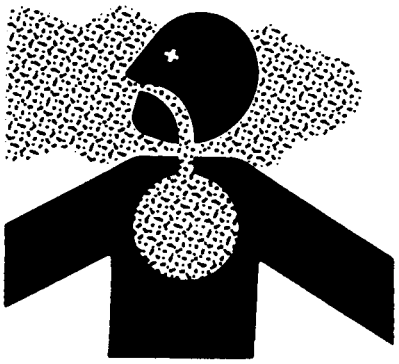

TS220 –UN–23AUG88

DX,AIR –19–17FEB99–1/1

Work in Clean Area

Before starting a job:

- Clean work area and machine.
- Make sure you have all necessary tools to do your job.
- Have the right parts on hand.
- Read all instructions thoroughly; do not attempt shortcuts.

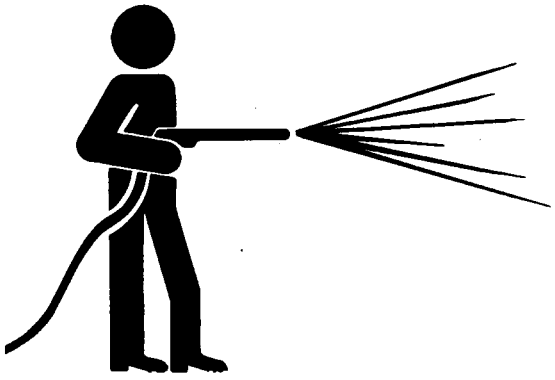

T6642EJ –UN–18OCT88

DX,CLEAN –19–04JUN90–1/1

Remove Paint Before Welding or Heating

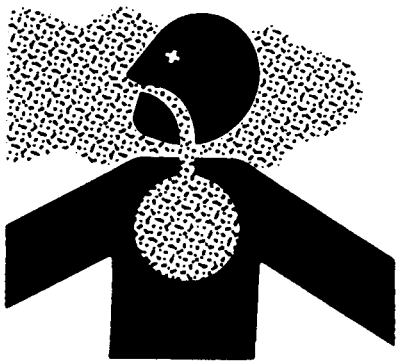

TS220 –UN–23AUG88

Avoid potentially toxic fumes and dust.

Hazardous fumes can be generated when paint is heated by welding, soldering, or using a torch.

Remove paint before heating:

- Remove paint a minimum of 100 mm (4 in.) from area to be affected by heating. If paint cannot be removed, wear an approved respirator before heating or welding.
- If you sand or grind paint, avoid breathing the dust. Wear an approved respirator.
- If you use solvent or paint stripper, remove stripper with soap and water before welding. Remove solvent or paint stripper containers and other flammable material from area. Allow fumes to disperse at least 15 minutes before welding or heating.

Do not use a chlorinated solvent in areas where welding will take place.

Do all work in an area that is well ventilated to carry toxic fumes and dust away.

Dispose of paint and solvent properly.

DX,PAINT –19–24JUL02–1/1

Avoid Heating Near Pressurized Fluid Lines

Flammable spray can be generated by heating near pressurized fluid lines, resulting in severe burns to yourself and bystanders. Do not heat by welding, soldering, or using a torch near pressurized fluid lines or other flammable materials. Pressurized lines can be accidentally cut when heat goes beyond the immediate flame area.



TS953 –UN–15MAY90

DX,TORCH –19–03MAR93–1/1

01
000
8

Illuminate Work Area Safely

Illuminate your work area adequately but safely. Use a portable safety light for working inside or under the machine. Make sure the bulb is enclosed by a wire cage. The hot filament of an accidentally broken bulb can ignite spilled fuel or oil.



TS223 –UN–23AUG88

DX,LIGHT –19–04JUN90–1/1

Use Proper Lifting Equipment

Lifting heavy components incorrectly can cause severe injury or machine damage.

Follow recommended procedure for removal and installation of components in the manual.

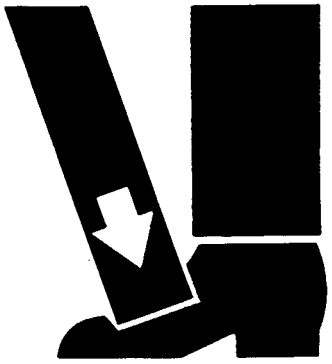

TS226 –UN–23AUG88

DX,LIFT –19–04JUN90–1/1

Construct Dealer-Made Tools Safely

Faulty or broken tools can result in serious injury. When constructing tools, use proper, quality materials and good workmanship.

Do not weld tools unless you have the proper equipment and experience to perform the job.

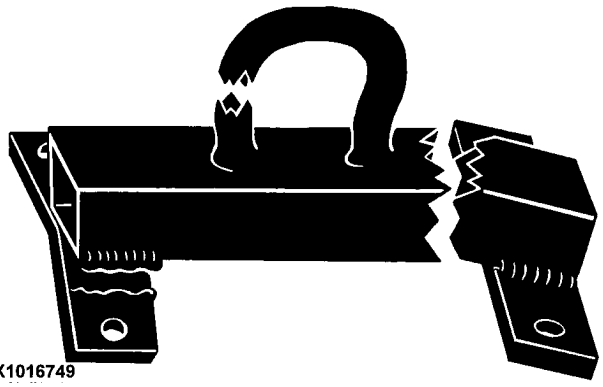

LX1016749 –UN–01JUL97

Construct Dealer-Made Tools Safely

DPSG,OUO1004,899 –19–19MAY99–1/1

Practice Safe Maintenance

Understand service procedure before doing work. Keep area clean and dry.

Never lubricate, service, or adjust machine while it is moving. Keep hands, feet , and clothing from power-driven parts. Disengage all power and operate controls to relieve pressure. Lower equipment to the ground. Stop the engine. Remove the key. Allow machine to cool.

Securely support any machine elements that must be raised for service work.

Keep all parts in good condition and properly installed. Fix damage immediately. Replace worn or broken parts. Remove any buildup of grease, oil, or debris.

On self-propelled equipment, disconnect battery ground cable (-) before making adjustments on electrical systems or welding on machine.

On towed implements, disconnect wiring harnesses from tractor before servicing electrical system components or welding on machine.



TS218 –UN–23AUG88

DX,SERV –19–17FEB99–1/1

Use Proper Tools

Use tools appropriate to the work. Makeshift tools and procedures can create safety hazards.

Use power tools only to loosen threaded parts and fasteners.

For loosening and tightening hardware, use the correct size tools. DO NOT use U.S. measurement tools on metric fasteners. Avoid bodily injury caused by slipping wrenches.

Use only service parts meeting John Deere specifications.



TS779 –UN–08NOV89

DX,REPAIR –19–17FEB99–1/1

01
000
10

Dispose of Waste Properly

Improperly disposing of waste can threaten the environment and ecology. Potentially harmful waste used with John Deere equipment include such items as oil, fuel, coolant, brake fluid, filters, and batteries.

Use leakproof containers when draining fluids. Do not use food or beverage containers that may mislead someone into drinking from them.

Do not pour waste onto the ground, down a drain, or into any water source.

Air conditioning refrigerants escaping into the air can damage the Earth's atmosphere. Government regulations may require a certified air conditioning service center to recover and recycle used air conditioning refrigerants.

Inquire on the proper way to recycle or dispose of waste from your local environmental or recycling center, or from your John Deere dealer.

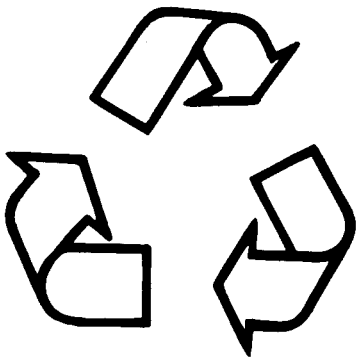

TS1133 –UN–26NOV90

DX,DRAIN –19–03MAR93–1/1

Live With Safety

Before returning machine to customer, make sure machine is functioning properly, especially the safety systems. Install all guards and shields.



TS231 –19–07OCT88

DX,LIVE –19–25SEP92–1/1

Engine Model Designation

John Deere Engine Model—4045 and 6068 Engines

John Deere engine model designation includes number of cylinders, displacement in liters, aspiration, user code, and application code. For example:

4045TF275 Engine	
4	Number of cylinders
4.5	Liter displacement
T	Aspiration code or emission tier level (see following)
F	User code (see below)
275	***POWERTECH***® application code
Aspiration Code (Earlier Engines)	
D	Naturally aspirated
T	Turbocharged, no aftercooling
A	Turbocharged and air-to-coolant aftercooled
H	Turbocharged and air-to-air aftercooled
S	Turbocharged and air-to-sea water aftercooled
Emission Tier Level (Later Engines)	
B	Non-certified engines
C, E or F	Tier 1/Stage I emission certified engine
G, J or K	Tier 2/Stage II emission certified engine
L, M, N or P	Tier 3/Stage IIIA emission certified engine
User Code	
AP	Industries John Deere Mexico S.A de C.V. (Saltillo/Monterrey, Mexico)
AT	Agritalia srl (Vittoria, Sicily, Italy)
BE	Bell Equipment Co. (Richards Bay, South Africa)
CQ	John Deere Brazil (Horizontina, Brazil)
DW	John Deere Davenport Works (Davenport, Iowa)
E	John Deere Ottumwa Works (Ottumwa, Iowa)
F	OEM (Outside Equipment Manufacturers)
FF	Deere-Hitachi (Kernersville, North Carolina)
FG	Goldoni S.P.A. (Modena, Italy)
FM	Marine Engines
H	John Deere Harvester Works (East Moline, Illinois)
KV	John Deere Commercial Worksite Products (Knoxville, Tennessee/Dubuque, Iowa)
L	John Deere Werke Mannheim (Germany)
LA	John Deere Werke Mannheim (Germany) (Engines with Bosch VP44 Injection Pump)
LV	John Deere Commercial Products (Augusta, Georgia)
N	John Deere Des Moines Works (Des Moines, Iowa)
P	Industrias John Deere Mexico S.A. de C.V. (Saltillo/Monterrey, Mexico)
PY	Larson & Toubro Ltd. (Pune, India)
RW	John Deere Waterloo Tractor Works (Waterloo, Iowa)
T	John Deere Dubuque Works (Dubuque, Iowa)
T8	Cameco Industries (Thibodaux, Louisiana)
TJ	John Deere Forestry (Timberjack) (Sweden/Finland/Canada)
YC	John Deere Jialian Harvester Co. Limited (China)
Z	John Deere WERKE Zweibrucken (Germany)
Application Code	
001, etc.	See Engine Application Charts, later in this Group

POWERTECH *is a registered trademark of Deere & Company*

01
001
2

Engine Serial Number Plate Information

IMPORTANT: The engine serial number plate (A) can be easily destroyed. Before "hot tank" cleaning the block, remove the plate.

NOTE: Four-valve head engines have "16V" or "24V" printed on a plate located on the rocker arm cover. The 4045HF475 model has "16V" to denote 16 valves total while 6068HF475 has "24V" to denote 24 valves total.

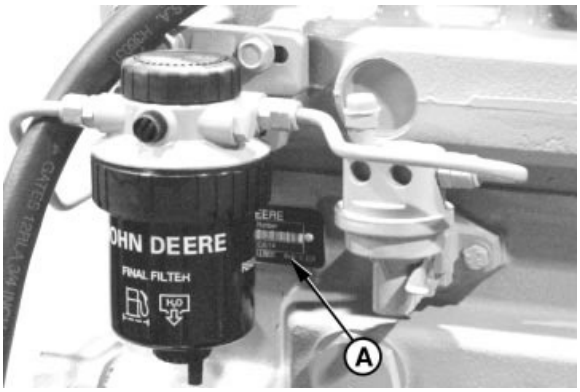

RG7778 –UN–11NOV97

Engine Serial Number (B)

Each engine has a 13-digit John Deere engine serial number identifying the producing factory, engine model designation, and a 6-digit sequential number. The following is an example:

T04045T000000

T0	Factory producing engine
4045T	Engine model designation
000000	Sequential serial number
Factory Code (Engine Manufacturer)	
T0	Dubuque, Iowa
CD	Saran, France
PE	Torreon, Mexico
J0	Rosario, Argentina
Engine Model Designation	
4045T	Definition explained previously. (See ENGINE MODEL DESIGNATION earlier in this group.
Sequential Number	
000000	6-digit sequential serial number. On later engines, this sequence number is preceded by a letter listed in the Emission Tier Level earlier in this group.

Engine Application Data (C)

The second line of information on the serial number plate identifies the engine/machine or OEM relationship. See ENGINE APPLICATION CHARTS later in this group.

A—Engine Serial Number Plate
B—Engine Serial Number
C—Engine Application Data
D—Coefficient of Absorption (Early Saran Engines)

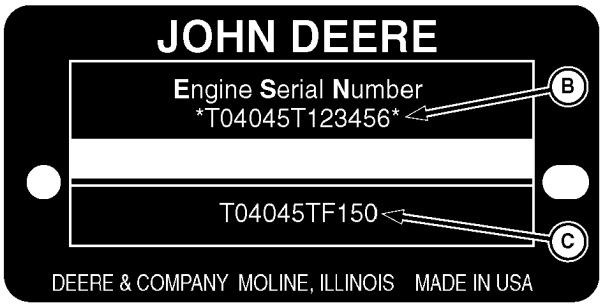

RG9060 –UN–16MAR98

Dubuque Engine Serial Number Plate

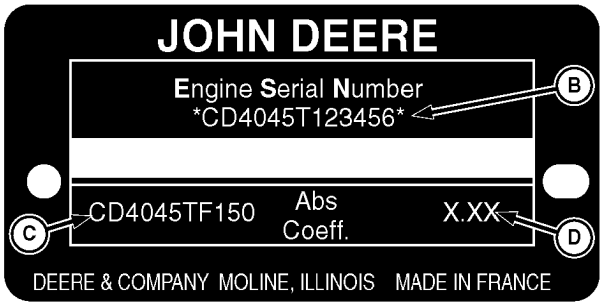

RG9061 –UN–16MAR98

Saran Engine Serial Number Plate

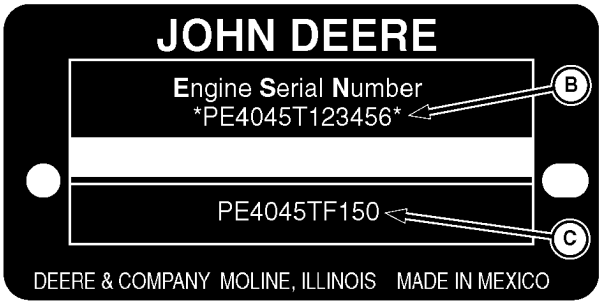

RG9062 –UN–16MAR98

Torreon Engine Serial Number Plate

Continued on next page

Coefficient of Absorption (D) — (Early Saran-Built Engines - Later Engines, Internal Factory Identification)

The second line of information on Saran serial number plate also contains the coefficient of absorption value for smoke emissions.

RG19661,0000005 –19–15JUN05–2/2

OEM Engine Option Code Label

An option code label is secured to the top of the valve cover and identifies the factory installed options on each OEM engine to ensure correct parts acquisition.

Always provide option code information and engine base code when ordering repair parts. A listing of option codes is given in Parts Catalogs and Operator's Manuals.

NOTE: Before "hot tank" cleaning, ensure that option codes are recorded elsewhere.

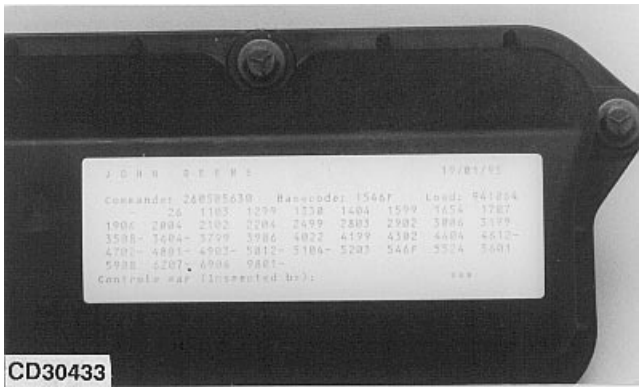

CD30433 –UN–10MAY95

DPSG,OUO1004,482 –19–07NOV98–1/1

01
001
4

Information Relative to Emissions Regulations

Depending on the final destination, engines can meet the emissions regulations according to the US Environmental Protection Agency (EPA), California Air Resources Board (CARB) and for Europe, the Directive 97/68/EC relating the measures against the emissions of particles and gaseous pollutant from internal combustion engines. Such engines are called “CERTIFIED” and receive an emission label on the engine.

The regulations prohibit tampering with the emission-related components listed below which would render that component inoperative or to make any adjustment on the engine beyond published specifications. It is also illegal to install a part or component where the principle effect of that component is to bypass, defeat, or render inoperative any engine component or device which would affect the engine’s conformance to the emission regulations. **To summarize, it is illegal to do anything except return the engine to its original published specifications.**

List of emission-related components:

- Fuel injection system
- Intake manifold
- Turbocharger
- EGR cooler
- EGR valve
- Charge air cooling system
- Piston

OUO1080,0000035 –19–29AUG01–1/1

Engine Application Charts

JOHN DEERE AGRICULTURAL EQUIPMENT	
Machine Model	**Engine Model**
Bell Equipment, South Africa	
884 Cane Loader	CD4045TBE50 (Tier 1)
904 Haul Tractor	CD4045TBE51 (Tier 1)
1266 Haul Tractor	CD6068TBE50 (Tier 1)
1866 Haul Tractor	CD6068TBE51 (Tier 2)
2256 Haul Tractor	CD6068HBE50 (Tier 1)
Des Moines, Iowa	
4700 Sprayer (138 kW)	T06068TN050, PE6068TN050, T06068TN053, PE6068TN053
4700 Sprayer (149 kW)	PE6068TN052
4710 Sprayer	PE6068TN052
4720 Sprayer	PE6068HN051 (Tier 2)
6700 Sprayer	T04045TN050, PE4045TN050
7455 Cotton Stripper	T06068TN051, PE6068TN051
7460 Cotton Stripper	PE6068TN054
9935 Cotton Picker	T06068TN051, PE6068TN051
East Moline, Illinois	
9400 Combine	T06068HH050
9410 Combine	T06068HH051
9450 Combine	T06068HH052, PE6068HH052
9550 Combine (Low Power)	PE6068HH054 (4-Valve) (Tier 2)
9550/9550SH Combine (High Power)	PE6068HH055 (4-Valve) (Tier 2)
9560 Combine (Low Power)	PE6068HH054 (4-Valve) (Tier 2)
9560 Combine (High Power)	PE6068HH055 (4-Valve) (Tier 2)
9965 Peanut Combine	PE6068HH057
Horizontina, Brazil	
1165 Combine	J06068TCQ11
1170 Combine	CD6068TCQ50
1175 Combine	J06068TCQ12
1450 Combine	J06068TCQ04
1450 CWS/WTS Combine	CD6068HCQ60, JO6068TCG04(Tier 2)
1550 CWS/WTS Combine	CD6068HCQ61, JO6068ACQ04(Tier 2)
3518 Combine	J06068TYC51
9650 Combine	J06068HCQ01
5403/5605 Tractor	J04045DCQ01
5705 Tractor	J04045TCQ02
6405 Tractor	J04045TCQ01
6415 Tractor	J04045TCQ03

Continued on next page

JOHN DEERE AGRICULTURAL EQUIPMENT	
Machine Model	**Engine Model**
6605 Tractor	J06068TCQ02
6615 Tractor	J06068TCQ15
7505 Tractor	J06068TCQ03
7515 Tractor	J06068TCQ14
Jiamusi, China	
1075 Combine	CD6068TYC50, J06068TYC50
3518 Combine	CD6068TYC51, CD6068HYC50, J06068TYC51
Zweibrucken, Germany	
2254 Combine	CD6068HZ050
3200/3400 Telehandler	CD4045TZ250
3215/3415 Telehandler (European Version)	CD4045HZ275, CD4045TZ270
3215/3415 Telehandler (North American Version)	CD4045HZ275, CD4045TZ270
3220/3420 Telehandler (European Version)	CD4045HZ275
3220/3420 Telehandler (North American Version)	CD4045HZ275
3800 Telehandler, Articulated	CD4045HZ050, 4045HZ060
9540/9540 Hillmaster Combine	CD6068HZ060 CD6068HZ480 (4-Valve) (Tier 2)
9560/9560HM Combine	CD6068HZ470 (4-Valve) (Tier 2) CD6068HZ481 (4-Valve) (Tier 2)
Ottumwa, Iowa	
4890 Windrower	T04045TE050, PE4045TE050
4895 Windrower	T04045TE051, PE4045TE051
4990 Windrower	T06068TE050, PE6068TE050
4995 Windrower	PE6068TE051
Waterloo, Iowa	
7210 (SYNCROPLUS™) Tractor	T06068TRW53
7210 (POWRQUAD™) Tractor	T06068TRW50, PE6068TRW50
7220 Tractor	CD6068TRW01, PE6068TRW01, PE6068HRW59
7220 IVT Tractor	PE6068HRW61
7320 Tractor	CD6068HRW01, PE6068HRW01, PE6068HRW59
7320 IVT Tractor	PE6068HRW61
7410 (SYNCROPLUS™) Tractor	T06068TRW54, PE6068HRW54
7410 (POWRQUAD™) Tractor	T06068TRW51, PE6068TRW51
7420 Tractor	CD6068HRW01, PE6068HRW01
7510 (POWRQUAD™) Tractor	T06068TRW70, PE6068TRW70
7520 Tractor	CD6068HRW01, PE6068HRW01
7610 Tractor (105 kW)	T06068TRW52, PE6068TRW52
7610 Tractor (110 kW)	T06068TRW72, PE6068TRW72

SYNCROPLUS is a trademark of Deere & Company
POWRQUAD is a trademark of Deere & Company

Continued on next page

JOHN DEERE AGRICULTURAL EQUIPMENT	
Machine Model	**Engine Model**
7720 Tractor (Auxilliary Drive)	PE6068HRW54 (4-Valve) (Tier 2)
7810 Tractor (Export-Brazil)	PE6068TRW73
7815 Tractor (Export-Brazil)	PE6068HRW63
7820 Tractor (Non-Auxilliary Drive)	PE6068HRW54 (4-Valve) (Tier 2)
Mannheim, Germany (European Market)	
3210 Tractor	CD4045DRT50
3310 Tractor	CD4045DRT51
3410 Tractor	CD4045TRT50
5620 Tractor	CD4045DL270
5720 Tractor	CD4045TL273
5820 Tractor	CD4045TL274
6010 Tractor	CD4045DL050
6020 Tractor	CD4045DL070
6020SE Tractor	CD4045TL270 (Tier 2)
6110 Tractor (Direct Fan Drive)	CD4045TL058
6110 Tractor (Viscous Fan Drive)	CD4045TL050
6120 Tractor	CD4045TL070
6120 Tractor (Premium)	CD4045TL271
6120SE Tractor	CD4045TL271
6205 Tractor	CD4045TL064
6210 Tractor (Direct Fan Drive)	CD4045TL059
6210 Tractor (Viscous Fan Drive)	CD4045TL051
6215 Tractor (Classic)	CD4045TL072
6215 Tractor (Classic)	CD4045TL071
6215 Tractor (Classic)	CD4045TL272 (Tier 2)
6220 Tractor	CD4045TL071
6220 Tractor (Premium)	CD4045TL272 (Tier 2)
6220SE Tractor	CD4045TL272
6310 Tractor (Direct Fan Drive)	CD4045TL060
6310 Tractor (Viscous Fan Drive)	CD4045TL052
6310 Tractor (ECU Level 4)	CD4045TLA50
6320 Tractor	CD4045HL072
6320 IVT Tractor	CD4045HLA70
6320 Tractor (Premium)	CD4045HL472
6320SE Tractor	CD4045TL073, CD4045HL270 (Tier 2)
6410 Tractor (Direct Fan Drive)	CD4045TL061
6410 Tractor (Viscous Fan Drive)	CD4045TL053
6410 Tractor (ECU Level 4)	CD4045TLA51
6420 Tractor	CD4045HL070

Continued on next page

JOHN DEERE AGRICULTURAL EQUIPMENT	
Machine Model	**Engine Model**
6420 IVT Tractor	CD4045HLA72
6420 Tractor (Premium)	CD4045HL473 (Tier 2)
6420S Tractor	CD4045HLA73 (Tier 2)
6420SE Tractor	CD4045HL271 (Tier 2)
6505 Tractor	CD6068DL051
6510 Tractor	CD6068DL050
6515 Tractor (Classic) (77 kW)	CD6068DL071
6515 Tractor (Classic) (85 kW)	CD6068DL070
6515 Tractor (Classic)	CD6068HL270 (Tier 2)
6520 Tractor	CD6068DL070
6520SE Tractor	CD6068TL073
6520 Tractor (Premium)	CD6068HL470 (4-Valve) (Tier 2), CD6068HL475 (4-Valve) (Tier 2)
6610 Tractor	CD6068TL050
6610 Tractor (ECU Level 4)	CD6068TLA50
6620 Tractor	CD6068HLA70
6620 Tractor (Premium)	CD6068HL471
6620SE2 Tractor	CD6068HL272
6810 Tractor	CD6068TL051
6810 Tractor (ECU Level 4)	CD6068TLA51
6820 Tractor	CD6068HLA71
6820 Tractor (Premium)	CD6068HL472 (4-Valve) (Tier 2)
6910 Tractor (99 kW)	CD6068TL052
6910 Tractor (107 kW)	CD6068TL054
6910 Tractor (107 kW) (ECU Level 4)	CD6068TLA52
6910S Tractor (ECU Level 4)	CD6068TLA53
6920 Tractor	CD6068HLA72
6920 Tractor (Premium)	CD6068HL473 (4-Valve) (Tier 2)
6920S Tractor	CD6068HLA73, CD6068HL474 (4-Valve) (Tier 2)
Mannheim, Germany (North American Market)	
6110/6110L Tractor	CD4045TL063
6120 Tractor	CD4045TL070
6120/6120L Tractor	CD4045TL271 (Tier 2)
6210/6210L Tractor	CD4045TL054
6215 Tractor (Advantage)	CD4045TL071 (Tier 1), CD4045TL272 (Tier 2)
6220 Tractor	CD4045TL071
6220 Tractor	CD4045TL272 (Tier 2)
6310/6310L/6310S Tractor	CD4045TL055
6320 Tractor	CD4045TL074, CD4045HL073
6320 IVT Tractor	CD4045HLA71, CD4045HL472

Continued on next page

JOHN DEERE AGRICULTURAL EQUIPMENT	
Machine Model	**Engine Model**
6320 IVT Tractor	CD4045HL476 (Tier 2)
6320/6320L/S Tractor	CD4045HL470, CD4045HL472, CD4045HL270 (Tier 2)
6403, 6405 Tractor (Advantage)	CD4045TL062
6410/6410L/6410S Tractor	CD4045TL056
6415 Tractor (Advantage)	CD4045TL075, CD4045HL272 (Tier 2)
6420 Tractor	CD4045HL070
6420 IVT Tractor	CD4045HLA72
6420/6420L/S Tractor	CD4045HL271 (Tier 2)
6420 IVT Tractor	CD4045HL473 (Tier 2)
6510L/6510S Tractor	CD4045TL057
6520 Tractor	CD4045HL071
6520L/S Tractor	CD4045HL273 (Tier 2)
6603 Tractor (Advantage)	CD6068TL053
6605 Tractor (Advantage)	CD6068TL053
6615 Tractor (Advantage)	CD6068TL071
6615 Tractor (Advantage)	CD6068HL271 (Tier 2)
6715 Tractor (Advantage)	CD6068TL072
6715 Tractor (Advantage)	CD6068HL273 (Tier 2)
Saltillo/Monterrey, Mexico	
5415 Tractor	PE4045DP052
5615 Tractor	PE4045DP053
5615 Tractor (Export-Turkey)	PE4045DLV51 (Tier 1), PE4045DP054 (Tier 1)
5715 Tractor	PE4045TP059
5715 Tractor (Export-Turkey)	PE4045TLV51 (Tier 1), PE4045TP062 (Tier 1)
6103 Tractor	PE4045TP055
6203 Tractor	PE4045TP056
6400 Tractor	PE4045TP054
6403 Tractor	PE4045TP057 (Non-Certified) PE4045TP063 (Non-Certified)
6403 Tractor (Export-U.S.A.)	PE4045TP060 (Tier 1) PE4045TP064 (Tier 1)
6415 Tractor	PE4045TP061 (Tier 2)
6603 Tractor	PE6068TP053 (Non-Certified) PE6068TP061 (Non-Certified)
6603 Tractor (Export-U.S.A.)	PE6068TP054 (Tier 1) PE6068TP062 (Tier 2)
7220 Tractor	PE6068TP055
7320 Tractor	PE6068TP056 (Tier 2)
7405 Tractor (Advantage)	CD6068TP051, PE6068TP051
7410 Tractor	CD6068TP052

Continued on next page

JOHN DEERE AGRICULTURAL EQUIPMENT	
Machine Model	**Engine Model**
7420 Tractor	PE6068TP057 (Tier 2)
7500 Tractor	PE6068TP052
7520 Tractor	PE6068TP058 (Tier 2)
Tekirdag, Turkey	
5615 Tractor	CD4045DTK20, PE4045DP054 (Tier 1)
5715 Tractor	PE4045TP062
Thibodaux, Louisiana (Cameco Industries) (Deere)	
S30 Harvester	PE6068DT850
SP1800 Cane Loader	PE6068DT850
SP1850 Cane Loader	PE4045TF150, PE4045TT852
SP2252 Cane Loader	PE6068TT850
SP3000 Cane Loader	PE6068DT850
100 Loader/ Harvester (Kanaf)	PE6068TT850
110 Cane Tractor	PE4045TT851
215 4WD Tractor	PE6068DT850
220 Tractor	PE6068TT851
220 4WD Tractor/Pineapple Harvester/Sprayer	PE6068TT850, PE6068DT850
404 Vegetable Sprayer	T04045TT850, T04045TT801, PE4045TT850

JOHN DEERE COMMERCIAL AND CONSUMER EQUIPMENT	
Augusta, Georgia	
5410 Tractor	CD4045DLV50, PE4045DLV50
5410 Tractor (No Engine Air Heater Option)	PE4045DLV51
5420/5420N Tractor	PE4045DLV50
5420/5420N Tractor (No Engine Air Heater Option)	PE4045DLV51
5425 Tractor	PE4045TLV53
5510/5510N Tractor	CD4045TLV50, PE4045TLV50
5510/5510N Tractor (No Engine Air Heater Option)	PE4045TLV51
5510 Tractor (LUK Clutch Option)	PE4045TLV52
5520/5520N Tractor	PE4045TLV50
5520/5520N Tractor (No Engine Air Heater Option)	PE4045TLV51
5520 Tractor	PE4045TLV52
5525 Tractor	PE4045TLV54
Agritalia srl (Vittoria, Sicily, Italy)	
5410 Tractor	CD4045TAT50
5415 Tractor	CD4045DAT70
5510 Tractor	CD4045TAT50
5515 Tractor	CD4045TAT70
5615 Tractor	CD4045TAT71

Continued on next page

JOHN DEERE CONSTRUCTION AND FORESTRY EQUIPMENT	
Machine Model	**Engine Model**
Backhoe, Loader	
B140 Backhoe Loader	PE4045DT060 (Tier 2)
B140 AC Backhoe Loader	PE4045TT094 (Tier 2)
B150 Backhoe Loader	PE4045TT094 (Tier 2)
B150 EH Backhoe Loader	PE4045TT094 (Tier 2)
B160 Backhoe Loader	PE4045TT095 (Tier 2)
B160 EH Backhoe Loader	PE4045TT095 (Tier 2)
B180 Backhoe Loader	PE6068TT061, PE6068TT096 (Tier 2)
B180 EH Backhoe Loader	PE6068TT061, PE6068TT096 (Tier 2)
310E Backhoe Loader	T04045DT055, T04045TT056
310E Backhoe Loader (Alt Comp)	T04045TT056
310SE Backhoe Loader	T04045TT050
315SE Backhoe Loader	T04045TT060
310G Backhoe Loader (S.N. —910005)	T04045DT056, PE4045DT056
310G Backhoe Loader (S.N.—910006)	T04045DT058, PE4045TT058 (Tier 2)
310G Backhoe Loader (Alt Comp) (S.N. —910007)	T04045TT080, PE4045TT080 (Tier 1)
310G Backhoe Loader (Alt Comp) (S.N. 910057—)	PE4045TT088 (Tier 2)
310SG Backhoe Loader (Alt Comp) (S.N. 909514—)	T04045TT080
310SG Backhoe Loader (S.N. —910004)	T04045TT081, PE4045TT081 (Tier 1)
310SG Backhoe Loader (S.N. 910056—)	PE4045TT089 (Tier 2)
315SG Backhoe Loader (S.N. —909995)	T04045TT081, PE4045TT081
315SG Backhoe Loader (S.N. 910069—)	PE4045TT089 (Tier 2)
410E Backhoe Loader	T04045TT053
410G Backhoe Loader	T04045TT082, PE4045TT082, PE4045TT093 (Tier 2)
710D Backhoe Loader (S.N. —834729)	T06068TT050, PE6068TT050
710D Backhoe Loader (S.N. 834730—)	T06068TT055, PE6068TT055
710G Backhoe Loader	T06068TT057, PE6068TT057
Crawler Dozer, Crawler Loader	
DX75 Crawler Dozer (Japan)	T04045DT006, T04045DT052
DX75 HST Crawler Dozer (Japan)	T04045TT070, PE4045TT070
450G Crawler Dozer (Direct Drive) (S.N. 840528—840890)	T04045DT004, T04045TT005 (Non Certified)
450G Crawler Dozer (Direct Drive) (S.N.841246—879425)	T04045TT061, PE4045TT061 (Tier 1)
450G Crawler Dozer (Torque Converter) (S.N. 840529—)	T04045TT013 (Non Certified)
450G Crawler Dozer (Torque Converter)	T04045TT067, PE4045TT067
450H, 450HLT Crawler Dozer	T04045DT053
450H Crawler Dozer (Nat. Asp.)	T04045DT057, PE4045DT057 (Tier 2)
450H LGP Crawler Dozer	T04045TT058, PE4045TT058
450H LGP Crawler Dozer	T04045TT085, PE4045TT085, PE4045TT090 (Tier 2)

Continued on next page

JOHN DEERE CONSTRUCTION AND FORESTRY EQUIPMENT	
Machine Model	**Engine Model**
450H Crawler Dozer (Alt Comp)	T04045TT057, PE4045TT057
450H Crawler Dozer (Alt Comp)	T04045TT084, PE4045TT084, PE4045TT090 (Tier 2)
455G Crawler Loader (Direct Drive)	T04045TT061, PE4045TT061 (Tier 1)
455G (Torque Converter) Crawler Loader	T04045TT067, PE4045TT067
550G Crawler Dozer	T04045TT006, T04045TT014, T04045TT062
550G Crawler Dozer (Torque Converter)	T04045TT062, T04045TT068
550H Crawler Dozer (S.N. —909830)	T04045TT064, PE4045TT064
550H Crawler Dozer (S.N. 910019—)	PE4045TT086, PE4045TT090 (Tier 2)
550H Forest Fire Plow (S.N.898487—909788)	T04045TT083, PE4045TT083
550H LGP Crawler Dozer (S.N. —909667)	T04045TT065, PE4045TT065
550H LGP Crawler Dozer (S.N. 910017—)	PE4045TT087, PE4045TT090 (Tier 2)
555G Crawler Loader (Direct Drive) (S.N. 840461—)	T04045TT063, PE4045TT063
555G Crawler Loader (Torque Converter)	T04045TT069, PE4045TT069
650G Crawler Dozer (Direct Drive)	T04045TT007, T04045TT063, PE4045TT063
650G Crawler Dozer (Torque Converter)	T04045TT015, T04045TT063, PE4045TT063, T04045TT069, PE4045TT069
650H Crawler Dozer	T04045TT066, PE4045TT066
650H Crawler Dozer	PE4045HT050 (Tier 2)
650H Forest Fire Plow—71 kw (95 hp)	PE4045HT051 (Tier 2)
650H Forest Fire Plow—85 kW (114 hp)	T04045TT091, PE4045TT091
700H Crawler Dozer	T06068TT056, PE6068TT056
700H Crawler Dozer	PE6068TT060 (Tier 2)
750C Crawler Dozer (S.N.—831315)	T06068TT007
750C Crawler Dozer (S.N. 831316—)	T06068TT052, PE6068TT052
Excavator	
690D Excavator	T06068TT051, PE6068TT051
690E LC Excavator (S.N. 559603—)	T06068TDW56
110 Excavator	T04045TT054, PE4045TP052
110C Excavator	PE4045TP058
110CFX Excavator	PE4045TP058
HYEX Military Excavator	PE4045TT050
120 Excavator	T04045TT052, PE4045TP051
120C Excavator	PE4045HP050 (Tier 2)
160C LC Excavator	PE4045HP051 (Tier 2)
160LC Excavator	T04045TT055, PE4045TP053
200LC Excavator	T06068TT051, PE6068TT051
200C LC Excavator	PE6068HT053, PE6068HT059 (Tier 2)
230LC, 230LR Excavator	T06068HT051, PE6068HT051
230C LC Excavator	PE6068HT054 (Tier 2)

Continued on next page

JOHN DEERE CONSTRUCTION AND FORESTRY EQUIPMENT	
Machine Model	**Engine Model**
270C LC Excavator	PE6068HT055 (Tier 2)
270LC Excavator	T06068HT052, PE6068HT052
790E LC Excavator	T06068TT005
CFX270C LC Excavator	PE6068HT055 (Tier 2)
CFX270LC Excavator	T06068HT052, PE6068HT052
Feller Buncher	
643G Feller Buncher	T06068TT053, PE6068TT053
643H Feller Buncher	PE6068TT058
643J Feller Buncher	PE6068HTJ55 (4-Valve) (Tier2)
653E Feller Buncher	T06068TT053, PE6068TT053
653G Feller Buncher—120 kW (160 hp)	T06068TT053, PE6068TT053, PE6068TT059
653G Feller Buncher—140 kW (188 hp)	PE6068HT057
843G Feller Buncher	T06068HT050, PE6068HT050
843H Feller Buncher	PE6068HT056
Forklift	
485E, 486E, 488E Forklift	T04045DT050, PE4045DT050
Forwarder	
810 Forwarder	CD4045HTJ75
1010D Forwarder	CD4045HTJ76
1110D Forwarder	CD6068HTJ75
1410D Forwarder	CD6068HTJ77
Grader	
670C, 670C Series II Grader	T06068HDW53, PE6068HDW53
670CH, 672CH Grader	T06068HDW55, PE6068HDW55
670CH Series II, 672CH Series II Grader (S.N. —589368)	T06068HDW58, PE6068HDW58
670CH Series II, 672CH Series II Grader (S.N. 589369—)	PE6068HDW61 (Tier 2)
Harvester, Wheeled	
770D Wheel Harvester	CD4045HTJ77
1070D Wheel Harvester	CD6068HTJ76
Landscape Loader	
210LE Landscape Loader	T04045DT050, PE4045DT050, PE4045DT059 (Tier 2), PE4045TT092 (Tier 2)
Log Loader, Knuckleboom	
330, 330B, 430, 430B Knuckleboom Log Loader	PE6068TTJ50
335B, 335C, 435B, 435C, 437C Knuckleboom Log Loader	PE6068TTJ51
Loggers	
2054 Logger	PE6068HT053, PE6068TT053, PE6068HT059 PE6068HT065 (Tier 2)
2554 Logger	PE6068HT054, PE6068HT064 (Tier 2)

Continued on next page

JOHN DEERE CONSTRUCTION AND FORESTRY EQUIPMENT	
Machine Model	**Engine Model**
4WD Loader	
LX80 Loader	T04045HDW51
LX100 Loader (Hitachi Construction Machine)	T06068TDW53, PE6068TDW53
LX100-3 Loader (Hitachi Construction Machine)	T06068TDW50, PE6068TDW50
LX120 Loader (Hitachi Construction Machine)	T06068HDW52, T06068HDW70, PE6068HDW70
324H Loader	CD4045DF153
344H Loader	T04045TF152, PE4045TF152
344H Loader	T04045TF273, CD4045TF273 (Tier 2)
TC44H Tool Carrier	T04045TDW50, PE4045TDW50
444H Loader	T04045TDW50, T04045HDW50, PE4045TDW50
444J Loader	PE4045HDW52
TC54H Tool Carrier	T06068TDW50, PE6068TDW50
544H Loader	T06068TDW50, PE6068TDW50
544J Loader	PE6068HDW56 (Tier 2)
TC62H Tool Carrier	T06068HDW50, PE6068HDW50
624G Loader	T06068TDW010
624H Loader	T06068HDW50, PE6068HDW50
624J Loader	PE6068HDW57 (Tier 2)
1204C Loader (Bell Equipment)	CD4045TBE52 (Tier 2)
1706C Loader (Bell Equipment)	CD6068TBE53 (Tier 1)
1806C Loader	CD6068TBE52 (Tier 2)
Skid Steer Loader	
JD7 Skid Steer Loader	PE4045DKV50, PE4045DKV51
270 Skid Steer Loader (Auxiliary Drive)	PE4045DKV50
270 Skid Steer Loader (Non-Auxiliary Drive)	PE4045DKV51
280 Skid Steer Loader	PE4045TKV50
Skidder	
360D Skidder (Timberjack)	T06068TDW54, PE6068TDW54
360D Skidder (Timberjack) (S.N. 589337—)	PE6068TDW58 (Tier 2)
460D Skidder (Direct Drive) (Timberjack)	T06068TDW55, PE6068TDW55
460D Skidder (Direct Drive) (Timberjack) (S.N. 589337—)	PE6068HDW60 (Tier 2)
460D Skidder (Torque Converter) (Timberjack) (S.N. —586336)	T06068TDW57, PE6068TDW57
460D Skidder (Torque Converter) (Timberjack) (S.N. 589337—)	PE6068HDW59 (Tier 2)
460D Skidder (Torque Converter) (Timberjack) (Europe)	PE6068HDW63 (Tier 2)
540G, 548G Skidder (S.N. 558205—565684)	T06068TDW51
540G-II, 548G-II Skidder (S.N. 565685—576602)	T06068TDW54, PE6068TDW54
540G-III, 548G-III Skidder (S.N. 576603—586336)	T06068TDW54, PE6068TDW54
540G-III, 548G-III Skidder (S.N. 586337—)	PE6068HDW58 (Tier 2)
640G, 648G Skidder (S.N. 558205—565684)	T06068TDW52

Continued on next page

JOHN DEERE CONSTRUCTION AND FORESTRY EQUIPMENT	
Machine Model	**Engine Model**
640G-II, 648G-II Skidder (S.N. 565685—576602)	T06068TDW55, PE6068TDW55
640G-III, 648G-III Skidder (Direct Drive) (S.N. 576603—586336)	T06068TDW55, PE6068TDW55
640G-III, 648G-III Skidder (Direct Drive) (S.N. 589337—)	PE6068HDW60 (Tier 2)
640G-III, 648G-III Skidder (Torque Converter) (S.N. —586336)	T06068TDW57, PE6068TDW57
640G-III, 648G-III Skidder (Torque Converter) (S.N. 586337—)	PE6068HDW59 (Tier 2)
640G-III, 648G-III Skidder (Torque Converter) (Europe)	PE6068HDW63 (Tier 2)

Continued on next page

RG19661,0000008 –19–15JUN05–11/15

JOHN DEERE OEM (OUTSIDE EQUIPMENT MANUFACTURERS)

Naturally Aspirated		Turbocharged		Turbocharged, Air-to-Air Aftercooled	
Engine Model	**Emission Certification**	**Engine Model**	**Emission Certification**	**Engine Model**	**Emission Certification**
CD4045DF120	Non-Certified	CD4045TF120	Non-Certified	CD4045HF120	Non-Certified
CD4045DF150	Tier 1 Certified	CD4045TF150	Tier 1 Certified	CD4045HF150	Tier 1 Certified
CD4045DF151	Tier 1 Certified	CD4045TF151	Tier 1 Certified	CD4045HF152	Tier 1 Certified
CD4045DF152	Tier 1 Certified	CD4045TF152	Tier 1 Certified	CD4045HF157	Tier 1 Certified
CD4045DF153	Tier 1 Certified	CD4045TF154	Tier 1 Certified	CD4045HF158	Tier 1 Certified
CD4045DF154	Tier 1 Certified	CD4045TF155	Tier 1 Certified	CD4045HF252	Non-Certified
				CD4045HF254	Tier 1 Certified
CD4045DF157	Tier 1 Certified	CD4045TF157	Tier 1 Certified	CD4045HF275	Tier 2 Certified
CD4045DF158	Tier 1 Certified	CD4045TF158	Tier 1 Certified	CD4045HF475 (4-Valve)	Tier 2 Certified
				CD4045HF485 (4-Valve)	Tier 3 Certified
CD4045DF270	Tier 2 Certified	CD4045TF161	Tier 1 Certified	CD6068HF120	Non-Certified
CD4045DFG70		CD4045TF162	Tier 1 Certified	CD6068HF150	Tier 1 Certified
CD4045DFM50	Non-Certified (Marine)	CD4045TF220	Non-Certified	CD6068HF157	Tier 1 Certified
CD4045DFM70	Tier 2 Certified (Marine)	CD4045TF250	Tier 1 Certified	CD6068HF158	Tier 1 Certified
		CD4045TF251	Tier 1 Certified	CD6068HF250	Tier 1 Certified
CD6068DF150	Tier 1 Certified	CD4045TF252	Tier 1 Certified	CD6068HF252	Tier 1 Certified
J04045DJ31		CD4045TF253	Tier 1 Certified	CD6068HF254	Tier 1 Certified
PE4045DF120	Non-Certified	CD4045TF254	Tier 1 Certified	CD6068HF258	Tier 1 Certified
PE4045DF150	Tier 1 Certified	CD4045TF257	Tier 1 Certified	CD6068HF275	Tier 2 Certified
PE4045DF151	Tier 1 Certified	CD4045TF258	Tier 1 Certified	CD6068HF475 (4-Valve)	Tier 2 Certified
				CD6068HF485 (4-Valve)	Tier 3 Certified
PE4045DF152	Tier 1 Certified	CD4045TF270	Tier 2 Certified	PE4045HF120	Non-Certified
PE4045DF153	Tier 1 Certified	CD4045TF271	Tier 2 Certified	PE4045HF150	Tier 1 Certified
PE4045DF154	Tier 1 Certified	CD4045TF275	Tier 2 Certified	PE4045HF152	Tier 1 Certified
PE4045DF157	Tier 1 Certified	CD4045TFM50	Non-Certified (Marine)	PE4045HF157	Tier 1 Certified
PE4045DF158	Tier 1 Certified	CD4045TFM75	Tier 2 Certified (Marine)	PE4045HF158	Tier 1 Certified
PE4045DF270	Tier 2 Certified	CD4045TFM75	(Marine)	PE4045HF252	Non-Certified
		CD6068SFM50	Non-Certified (Marine)	PE4045HF275	Tier 2 Certified
PE4045DFM50	Non-Certified (Marine)	CD6068TF120	Non-Certified	PE4045HF475 (4-Valve)	Tier 2 Certified

Continued on next page

JOHN DEERE OEM (OUTSIDE EQUIPMENT MANUFACTURERS)					
Naturally Aspirated		**Turbocharged**		**Turbocharged, Air-to-Air Aftercooled**	
		CD6068TF150	Tier 1 Certified	PE6068HF120	Non-Certified
		CD6068TF151	Tier 1 Certified	PE6068HF150	Tier 1 Certified
PE6068DF150	Tier 1 Certified	CD6068TF152	Tier 1 Certified	PE6068HF157	Tier 1 Certified
T04045DF120	Non-Certified	CD6068TF157	Tier 1 Certified	PE6068HF158	Tier 1 Certified
T04045DF150	Tier 1 Certified	CD6068TF158	Tier 1 Certified	PE6068HF250	Tier 1 Certified
T04045DF151	Tier 1 Certified	CD6068TF159	Tier 1 Certified	PE6068HF252	Tier 1 Certified
T04045DF152	Tier 1 Certified	CD6068TF220	Non-Certified	PE6068HF258	Tier 1 Certified
T04045DF153	Tier 1 Certified	CD6068TF250	Tier 1 Certified	PE6068HF275	Tier 2 Certified
T04045DF154	Tier 1 Certified	CD6068TF251	Tier 1 Certified	PE6068HF475 (4-Valve)	Tier 2 Certified
		CD6068TF254	Tier 1 Certified	PE6068HF485 (4-Valve)	Tier 3 Certified
T04045DF157	Tier 1 Certified	CD6068TF257	Tier 1 Certified	T04045HF120	Non-Certified
T04045DF158	Tier 1 Certified	CD6068TF258	Tier 1 Certified	T04045HF150	Tier 1 Certified
T04045DF270	Tier 2 Certified	CD6068TF275	Tier 2 Certified	T04045HF152	Tier 1 Certified
		CD6068TFM50	Non-Certified (Marine)	T04045HF157	Tier 1 Certified
T04045DFM50	Non-Certified (Marine)	CD6068TFM75	Tier 2 Certified (Marine)	T04045HF158	Tier 1 Certified
T06068DF150	Tier 1 Certified	CD6068TFM76	Tier 2 Certified (Marine)	T04045HF252	Non-Certified
		J04045TJ31			
		J06068TJ31			
		J06068TJ32			
		PE4045TF120	Non-Certified	T04045HF275	Tier 2 Certified
		PE4045TF150	Tier 1 Certified	T04045HF475 (4-Valve)	Tier 2 Certified
		PE4045TF151	Tier 1 Certified	T06068HF120	Non-Certified
		PE4045TF152	Tier 1 Certified	T06068HF150	Tier 1 Certified
		PE4045TF154	Tier 1 Certified	T06068HF157	Tier 1 Certified
		PE4045TF155	Tier 1 Certified	T06068HF158	Tier 1 Certified
		PE4045TF157	Tier 1 Certified	T06068HF250	Tier 1 Certified
		PE4045TF158	Tier 1 Certified	T06068HF252	Tier 1 Certified
		PE4045TF161	Tier 1 Certified	T06068HF258	Tier 1 Certified
		PE4045TF162	Tier 1 Certified	T06068HF275	Tier 2 Certified
		PE4045TF220	Non-Certified	T06068HF475 (4-Valve)	Tier 2 Certified
		PE4045TF250	Tier 1 Certified		
		PE4045TF251	Tier 1 Certified		
		PE4045TF252	Non-Certified		
		PE4045TF253	Tier 1 Certified		
		PE4045TF257	Tier 1 Certified		
		PE4045TF258	Tier 1 Certified		

Continued on next page

JOHN DEERE OEM (OUTSIDE EQUIPMENT MANUFACTURERS)

Naturally Aspirated		Turbocharged		Turbocharged, Air-to-Air Aftercooled	
		PE4045TF270	Tier 2 Certified		
		PE4045TF271	Tier 2 Certified		
		PE4045TF275	Tier 2 Certified		
		PE4045TFM50	Non-Certified (Marine)		
		PE4045TFM75	Non-Certified (Marine)		
		PE6068SFM50	Non-Certified (Marine)		
		PE6068TF120	Non-Certified		
		PE6068TF150	Tier 1 Certified		
		PE6068TF151	Tier 1 Certified		
		PE6068TF152	Tier 1 Certified		
		PE6068TF157	Tier 1 Certified		
		PE6068TF158	Tier 1 Certified		
		PE6068TF159	Tier 1 Certified		
		PE6068TF220	Non-Certified		
		PE6068TF250	Tier 1 Certified		
		PE6068TF251	Tier 1 Certified		
		PE6068TF252	Non-Certified		
		PE6068TF257	Tier 1 Certified		
		PE6068TF258	Tier 1 Certified		
		PE6068TF275	Tier 2 Certified		
		PE6068TFM50	Non-Certified (Marine)		
		T04045TF120	Non-Certified		
		T04045TF150	Tier 1 Certified		
		T04045TF151	Tier 1 Certified		
		T04045TF152	Tier 1 Certified		
		T04045TF154	Tier 1 Certified		
		T04045TF155	Tier 1 Certified		
		T04045TF157	Tier 1 Certified		
		T04045TF158	Tier 1 Certified		
		T04045TF161	Tier 1 Certified		
		T04045TF162	Tier 1 Certified		
		T04045TF220	Non-Certified		
		T04045TF250	Tier 1 Certified		
		T04045TF251	Tier 1 Certified		
		T04045TF252	Non-Certified		
		T04045TF253	Tier 1 Certified		
		T04045TF257	Tier 1 Certified		
		T04045TF258	Tier 1 Certified		
		T04045TF270	Tier 2 Certified		
		T04045TF271	Tier 2 Certified		

Continued on next page

JOHN DEERE OEM (OUTSIDE EQUIPMENT MANUFACTURERS)					
Naturally Aspirated		**Turbocharged**		**Turbocharged, Air-to-Air Aftercooled**	
		T04045TF275	Tier 2 Certified		
		T04045TFM50	Non-Certified (Marine)		
		T06068SFM50	Non-Certified (Marine)		
		T06068TF120	Non-Certified		
		T06068TF150	Tier 1 Certified		
		T06068TF151	Tier 1 Certified		
		T06068TF152	Tier 1 Certified		
		T06068TF157	Tier 1 Certified		
		T06068TF158	Tier 1 Certified		
		T06068TF159	Tier 1 Certified		
		T06068TF220	Non-Certified		
		T06068TF250	Tier 1 Certified		
		T06068TF251	Tier 1 Certified		
		T06068TF257	Tier 1 Certified		
		T06068TF258	Tier 1 Certified		
		T06068TF275	Tier 2 Certified		
		T06068TFM50	Non-Certified (Marine)		

RG19661,0000008 –19–15JUN05–15/15

Diesel Fuel - Non-Certified, Tier I and Tier 2/Stage II Engines

Consult your local fuel distributor for properties of the diesel fuel available in your area.

In general, diesel fuels are blended to satisfy the low temperature requirements of the geographical area in which they are marketed.

Diesel fuels specified to EN 590 or ASTM D975 are recommended.

In all cases, the fuel shall meet the following properties:

Cetane number of 40 minimum. Cetane number greater than 50 is preferred, especially for temperatures below -20°C (-4°F) or elevations above 1500 m (5000 ft).

Cold Filter Plugging Point (CFPP) below the expected low temperature OR **Cloud Point** at least 5°C (9°F) below the expected low temperature.

Fuel lubricity should pass a minimum of 3100 gram load level as measured by the BOCLE scuffing test.

Sulfur content:

- Sulfur content should not exceed 0.5%. Sulfur content less than 0.05% is preferred.
- If diesel fuel with sulfur content greater than 0.5% sulfur content is used, reduce the service interval for engine oil and filter by 50%.
- DO NOT use diesel fuel with sulfur content greater than 1.0%.

Bio-diesel fuels may be used ONLY if the fuel properties meet DIN 51606 or equivalent specification.

DO NOT mix used engine oil or any other type of lubricant with diesel fuel.

RG19661,0000018 –19–27JUN05–1/1

01
002
2

Diesel Fuel - Tier 3/Stage IIIA Engines

Consult your local fuel distributor for properties of the diesel fuel available in your area.

In general, diesel fuels are blended to satisfy the low temperature requirements of the geographical area in which they are marketed.

Diesel fuels specified to EN 590 or ASTM D975 are recommended.

Required fuel properties

In all cases, the fuel shall meet the following properties:

Cetane number of 45 minimum. Cetane number greater than 50 is preferred, especially for temperatures below -20°C (-4°F) or elevations above 1500 m (5000 ft).

Cold Filter Plugging Point (CFPP) below the expected low temperature OR **Cloud Point** at least 5°C (9°F) below the expected low temperature.

Fuel lubricity should pass a minimum level of 3100 grams as measured by ASTM D6078 or maximum scar diameter of 0.45 mm as measured by ASTM D6079 or ISO 12156-1.

Sulfur content:

- Diesel fuel quality and fuel sulfur content must comply with all existing emissions regulations for the area in which the engine operates.
- Sulfur content less than 1000 ppm (0.10%) is strongly recommended.
- If diesel fuel with sulfur content greater than 1000 ppm (0.10%) is used, crankcase oil service intervals may be affected. (See recommendation for Diesel Engine Oil and Filter Service Intervals)
- Diesel fuel sulfur content greater than 5000 ppm (0.50%) is **NOT** recommended.
- **DO NOT** use diesel fuel with sulfur content greater than 10,000 ppm (1.00%).

IMPORTANT: Do not mix used diesel engine oil or any other type of lubricating oil with diesel fuel.

IMPORTANT: Improper fuel additive usage may cause damage on fuel injection equipment of diesel engines.

RG19661,0000017 –19–27JUN05–1/1

Bio-Diesel Fuel

Consult your local fuel distributor for properties of the bio-diesel fuel available in your area.

Bio-diesel fuels may be used ONLY if the bio-diesel fuel properties meet the latest edition of ASTM D6751, EN 14214, or equivalent specification.

It has been found that bio-diesel fuels may improve lubricity in concentrations up to a 5% blend (also known as B5) in petroleum diesel fuel.

When using a blend of bio-diesel fuel, the engine oil level must be checked daily when the air temperature is –10°C (14°F) or lower. If oil becomes diluted with fuel, shorten oil change intervals accordingly.

IMPORTANT: Raw pressed vegetable oils are NOT acceptable for use as fuel in any concentration in John Deere engines.

These oils do not burn completely, and will cause engine failure by leaving deposits on injectors and in the combustion chamber.

A major environmental benefit of bio-diesel fuel is its ability to biodegrade. This makes proper storage and handling of bio-diesel fuel especially important. Areas of concern include:

- Quality of new fuel
- Water content of the fuel
- Problems due to aging of the fuel

Potential problems resulting from deficiencies in the above areas when using bio-diesel fuel in concentrations above 5% may lead to the following symptoms:

- Power loss and deterioration of performance
- Fuel leakage
- Corrosion of fuel injection equipment
- Coked and/or blocked injector nozzles, resulting in engine misfire
- Filter plugging
- Lacquering and/or seizure of internal components
- Sludge and sediments
- Reduced service life of engine components

Consult your fuel supplier for additives to improve storage and performance of bio-diesel fuels.

DX,FUEL7 –19–05JAN04–1/1

01
002
4

Lubricity of Diesel Fuel

Diesel fuel must have adequate lubricity to ensure proper operation and durability of fuel injection system components.

ASTM D975 and EN 590 specifications do not require fuels to pass a fuel lubricity test.

Sulfur content of diesel fuel for highway use is less than 0.05% (500 ppm) in the United States and Canada, and less than 0.035% (350 ppm) in the European Union.

Experience shows that some low sulfur diesel fuels may have inadequate lubricity and their use may reduce performance in fuel injection systems due to inadequate lubrication of injection pump components. The lower concentration of aromatic compounds in these fuels also adversely affects injection pump seals and may result in leaks.

Use of low lubricity diesel fuels may also cause accelerated wear, injection nozzle erosion or corrosion, engine speed instability, hard starting, low power, and engine smoke.

Fuel lubricity should pass a minimum load level of 3100 grams as measured by ASTM D6078 or maximum scar diameter of 0.45 mm as measured by ASTM D6079 or ISO 12156-1.

If fuel of low or unknown lubricity is used, add John Deere PREMIUM DIESEL FUEL CONDITIONER (or equivalent) at the specified concentration.

DX,FUEL5 –19–19DEC03–1/1

Dieselscan Fuel Analysis

DIESELSCAN™ is a John Deere fuel sampling program to help you monitor the quality of your fuel source. It verifies fuel type, cleanliness, water content, suitability for cold weather operation, and if fuel is within ASTM specifications. Check with your John Deere dealer for availability of DIESELSCAN kits.

DIESELSCAN is a trademark of Deere & Company

DX,FUEL6 –19–06DEC00–1/1

Diesel Engine Break-In Oil

New engines are filled at the factory with John Deere ENGINE BREAK-IN OIL. During the break-in period, add John Deere ENGINE BREAK-IN OIL as needed to maintain the specified oil level.

Change the oil and filter after the first 100 hours of operation of a new or rebuilt engine.

After engine overhaul, fill the engine with John Deere ENGINE BREAK-IN OIL.

If John Deere ENGINE BREAK-IN OIL is not available, use a diesel engine oil meeting one of the following during the first 100 hours of operation:

- API Service Classification CE
- API Service Classification CD
- API Service Classification CC
- ACEA Oil Sequence E2
- ACEA Oil Sequence E1

After the break-in period, use John Deere PLUS-50™ or other diesel engine oil as recommended in this manual.

IMPORTANT: Do not use PLUS-50 oil or engine oils meeting any of the following during the first 100 hours of operaton of a new or rebuilt eninge:

API CI-4	**API CF**
API CH-4	**ACEA E5**
API CG-4	**ACEA E4**
API CF-4	**ACEA E3**
API CF-2	

These oils will not allow the engine to break-in properly.

PLUS-50 is a trademark of Deere & Company.

DX,ENOIL4 –19–03NOV03–1/1

01
002
6

Diesel Engine Oil—Non-Certified and Tier 1 Certified Engines

Use oil viscosity based on the expected air temperature range during the period between oil changes.

John Deere PLUS-50™ oil is preferred

Oils meeting one of the following specifications are also recommended:

- ACEA Oil Sequence E5
- ACEA Oil Sequence E4

Extended service intervals may apply when John Deere PLUS-50, ACEA E5, or ACEA E4 engine oils are used. Consult your John Deere dealer for more information.

Other oils may be used if they meet one or more of the following:

- John Deere TORQ-GARD SUPREME™
- API Service Category CI-4
- API Service Category CH-4
- API Service Category CG-4
- API Service Category CF-4
- ACEA Oil Sequence E3
- ACEA Oil Sequence E2

If oils meeting API CG-4, API CF-4, or ACEA E2 are used, reduce the service interval by 50%.

Multi-viscosity diesel engine oils are preferred.

If diesel fuel with sulfur content greater than 0.5% (5000 ppm) is used, reduce the service interval by 50%.

DO NOT use diesel fuel with sulfur content greater than 1.0% (10 000 ppm).

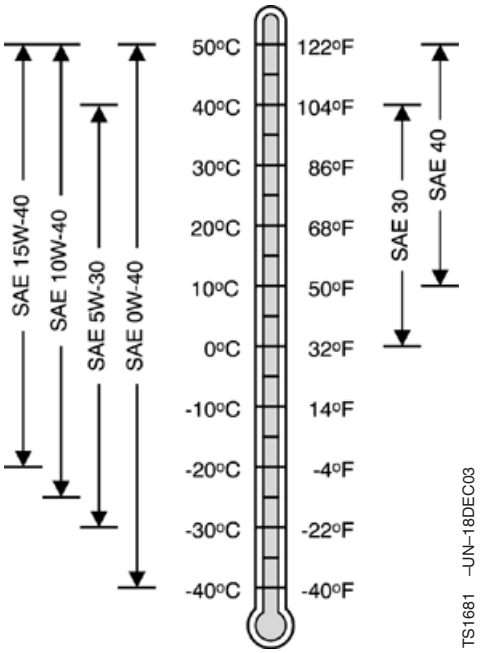

PLUS-50 is a trademark of Deere & Company
TORQ-GARD SUPREME is a trademark of Deere & Company

OUO1082,0000236 –19–03JUN04–1/1

Diesel Engine Oil—Tier 2/Stage II Certified Engines

Use oil viscosity based on the expected air temperature range during the period between oil changes.

John Deere PLUS-50™ oil is preferred.

Oils meeting one of the following specifications are also recommended

- ACEA Oil Sequence E5
- ACEA Oil Sequence E4

Extended service intervals may apply when John Deere PLUS-50, ACEA E5, or ACEA E4 engine oils are used. Consult your John Deere dealer for more information.

Other oils may be used if they meet one or more of the following:

- John Deere TORQ-GARD SUPREME™
- API Service Category CI-4
- API Service Category CH-4
- ACEA Oil Sequence E3

Multi-viscosity diesel engine oils are preferred.

Diesel fuel quality and fuel sulfur content must comply with all existing emissions regulations for the area in which the engine operates.

If diesel fuel with sulfur content greater than 0.05% (500 ppm) is used, reduce the service interval by 100 hours.

If diesel fuel with sulfur content greater than 0.5% (5000 ppm) is used, reduce the service interval by 50%.

DO NOT use diesel fuel with sulfur content greater than 1.0% (10 000 ppm).

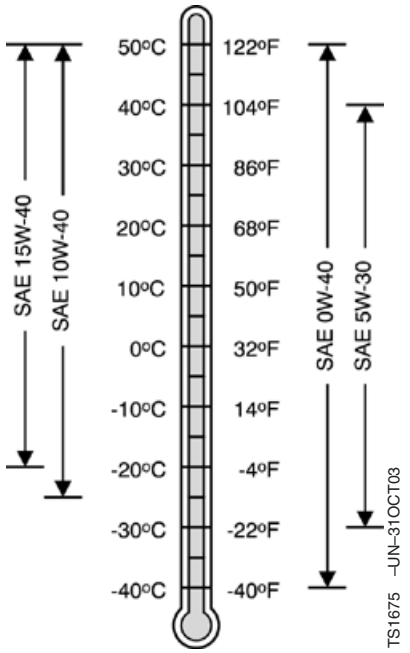

PLUS-50 is a trademark of Deere & Company
TORQ-GARD SUPREME is a trademark of Deere & Company

RG19661,0000014 –19–22JUN05–1/1

01
002
8

Diesel Engine Oil —Tier 3/Stage IIIA Certified Engines

Use oil viscosity based on the expected air temperature range during the period between oil changes.

John Deere PLUS-50™ oil is preferred.

Oils meeting one of the following specifications are also recommended

- ACEA Oil Sequence E6
- ACEA Oil Sequence E7

Extended service intervals may apply when John Deere PLUS-50, ACEA E6, or ACEA E7 engine oils are used. Consult table in following block for more information.

Other oils may be used if they meet one or more of the following:

- John Deere TORQ-GARD SUPREME™
- API Service Category CI-4 PLUS or CI-4
- ACEA Oil Sequence E4 or E5

Multi-viscosity diesel engine oils are preferred.

Diesel fuel quality and fuel sulfur content must comply with all existing emissions regulations for the area in which the engine operates.

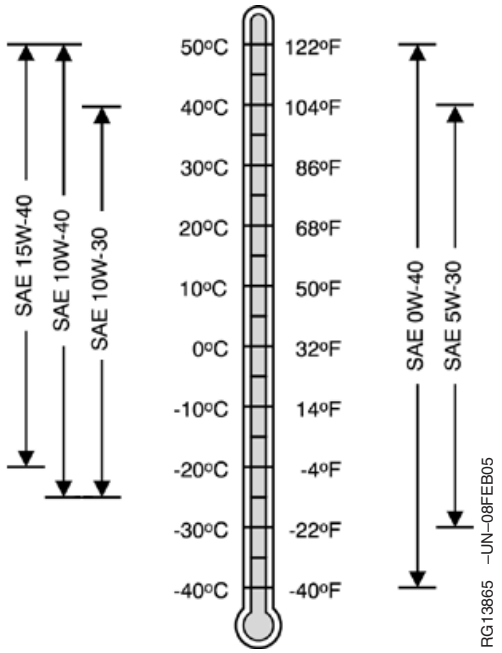

Oil Viscosities for Various Air Temperatures

PLUS-50 is a trademark of Deere & Company
TORQ-GARD SUPREME is a trademark of Deere & Company

RG19661,0000013 –19–22JUN05–1/1

OILSCAN®, OILSCAN Plus®, COOLSCAN™ and COOLSCAN PLUS™



T104220 –UN–03OCT96

OILSCAN®, OILSCAN Plus®, COOLSCAN™ and COOLSCAN PLUS®are John Deere sampling fluid programs to help you monitor machine maintenance and system condition. The objective of a fluid sampling program is to ensure machine availability when you need it and to reduce repair costs by identifying potential problems before they become critical.

Oil and coolant samples should be taken from each system prior to its recommended change interval.

Check with your John Deere dealer on a maintenance program for your specific application. Your dealer has the sampling products and expertise to assist you in lowering your overall operating costs through fluid sampling.

OILSCAN is a registered trademark of Deere & Company.
OILSCAN Plus is a registered trademark of Deere & Company.
COOLSCAN is a trademark of Deere & Company.
COOLSCAN PLUS is a trademark of Deere & Company

RG,01,DT7040 –19–05JAN00–1/1

Oil Filters

Filtration of oils is critical to proper operation and lubrication.

Always change filters regularly as specified in this manual.

Use filters meeting John Deere performance specifications.

DX,FILT –19–18MAR96–1/1

01
002
10

Grease

Use grease based on NLGI consistency numbers and the expected air temperature range during the service interval.

John Deere SD POLYUREA GREASE is preferred.

The following greases are also recommended

- John Deere HD LITHIUM COMPLEX GREASE
- John Deere HD WATER RESISTANT GREASE
- John Deere GREASE-GARD™

Other greases may be used if they meet the following:

NLGI Performance Classification GC-LB

IMPORTANT: Some types of grease thickeners are not compatible with others. Consult your grease supplier before mixing different types of grease

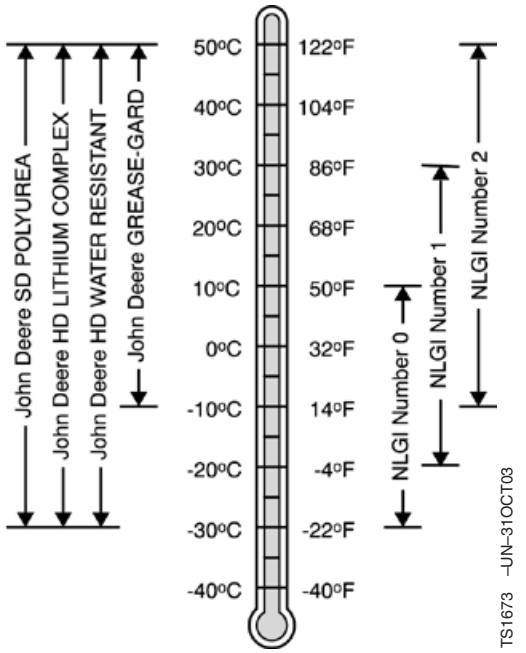

GREASE-GARD is a trademark of Deere & Company

DX,GREA1 –19–07NOV03–1/1

Diesel Engine Coolant

The engine cooling system is filled to provide year-round protection against corrosion and cylinder liner pitting, and winter freeze protection to -37°C (-34°F). If protection at lower temperatures is required, consult your John Deere dealer for recommendations.

John Deere COOL-GARD™ Prediluted Coolant is preferred for service.

John Deere COOL-GARD Prediluted Coolant is available in either a concentration of 50% ethylene glycol or a 55% propylene glycol.

Additional recommended coolants

The following engine coolant is also recommended:

- John Deere COOL-GARD Coolant Concentrate in a 40% to 60% mixture of concentrate with quality water.

John Deere COOL-GARD coolants do not require use of supplemental coolant additives, except for periodic replenishment of additives during the drain interval.

Other fully formulated coolants

Other fully formulated low silicate ethylene or propylene glycol base coolants for heavy-duty engines may be used if they meet one of the following specifications:

- ASTM D6210 prediluted (50%) coolant
- ASTM D6210 coolant concentrate in a 40% to 60% mixture of concentrate with quality water

Coolants meeting ASTM D6210 do not require use of supplemental coolant additives, except for periodic replenishment of additives during the drain interval.

Coolants requiring supplemental coolant additives

Other low silicate ethylene glycol base coolants for heavy-duty engines may also be used if they meet one of the following specifications:

- ASTM D4985 ethylene glycol base prediluted (50%) coolant
- ASTM D4985 ethylene glycol base coolant concentrate in a 40% to 60% mixture of concentrate with quality water

Coolants meeting ASTM D4985 require an initial charge of supplemental coolant additives, formulated for protection of heavy duty diesel engines against corrosion and cylinder liner erosion and pitting. They also require periodic replenishment of additives during the drain interval.

Other coolants

If a coolant known to meet the requirements of coolant specifications shown in this manual is not available, use either:

- ethylene glycol or propylene glycol base prediluted (40% to 60%) coolant
- ethylene glycol or propylene glycol base coolant concentrate in a 40% to 60% mixture of concentrate with quality water

The coolant concentrate or prediluted coolant shall be of a quality that provides cavitation protection to cast iron and aluminum parts in the cooling system.

Water quality

Water quality is important to the performance of the cooling system. Distilled, deionized, or demineralized water is recommended for mixing with ethylene glycol and propylene glycol base engine coolant concentrate.

COOL-GARD is a trademark of Deere & Company

Continued on next page

01
002
12

IMPORTANT: Do not use cooling system sealing additives or antifreeze that contains sealing additives.

IMPORTANT: Do not mix ethylene glycol and propylene glycol base coolants.

DX,COOL3 –19–19DEC03–2/2

Additional Information About Diesel Engine Coolants and Supplemental Coolant Additives

Engine coolants are a combination of three chemical components: ethylene glycol or propylene glycol antifreeze, inhibiting coolant additives, and quality water.

Coolant specifications

Some products, including John Deere COOL-GARD™ Prediluted Coolant, are fully formulated coolants that contain all three components in their correct concentrations. Do not add an initial charge of supplemental coolant additives to these fully formulated products.

Coolants meeting ASTM D6210 do not require an initial charge of supplemental coolant additives.

Some coolant concentrates, including John Deere COOL-GARD Coolant Concentrate, contain both glycol antifreeze and inhibiting coolant additives. Mix these products with quality water, but do not add an initial charge of supplemental coolant additives.

Coolants meeting ASTM D4985 require an initial charge of supplemental coolant additives.

Replenish coolant additives

The concentration of coolant additives is gradually depleted during engine operation. Periodic replenishment of inhibitors is required, even when John Deere COOL-GARD or another fully formulated coolant is used. Follow the recommendations in this manual for the use of supplemental coolant additives.

Why use supplemental coolant additives?

Operating without proper coolant additives will result in increased corrosion, cylinder liner erosion and pitting, and other damage to the engine and cooling system. A simple mixture of ethylene glycol or propylene glycol and water will not give adequate protection.

Use of supplemental coolant additives reduces corrosion, erosion, and pitting. These chemicals reduce the number of vapor bubbles in the coolant and help form a protective film on cylinder liner surfaces. This film acts as a barrier against the harmful effects of collapsing vapor bubbles.

Avoid automotive-type coolants

Never use automotive-type coolants (such as those meeting ASTM D3306). These coolants do not contain the correct additives to protect heavy-duty diesel engines. They often contain a high concentration of silicates and may damage the engine or cooling system.

Water quality

Water quality is important to the performance of the cooling system. Distilled, deionized, or demineralized water is recommended for mixing with ethylene glycol and propylene glycol base engine coolant concentrate. All water used in the cooling system should meet the following minimum specifications for quality:

Chlorides	<40 mg/L
Sulfates	<100 mg/L
Total dissolved solids	<340 mg/L
Total hardness	<170 mg/L
pH	5.5 to 9.0

Freeze protection

The relative concentrations of glycol and water in the engine coolant determine its freeze protection limit.

COOL-GARD is a trademark of Deere & Company

Continued on next page

Ethylene Glycol	Freeze Protection Limit
40%	-24°C (-12°F)
50%	-37°C (-34°F)
60%	-52°C (-62°F)
Propylene Glycol	**Freeze Protection Limit**
40%	-21°C (-6°F)
50%	-33°C (-27°F)
60%	-49°C (-56°F)

DO NOT use a coolant-water mixture greater than 60% ethylene glycol or propylene glycol.

DX,COOL7 –19–19DEC03–2/2

Testing Diesel Engine Coolant

Testing Diesel Engine Coolant

Maintaining adequate concentrations of glycol and inhibiting additives in the coolant is critical to protect the engine and cooling system against freezing, corrosion, and cylinder liner erosion and pitting.

Test the coolant solution at intervals of 12 months or less and whenever excessive coolant is lost through leaks or overheating.

Coolant test strips

Coolant test strips are available from your John Deere dealer. These test strips provide a simple, effective method to check the freeze point and additive levels of your engine coolant.

Compare the results to the supplemental coolant additive (SCA) chart to determine the amount of inhibiting additives in your coolant and whether more John Deere COOLANT CONDITIONER should be added.

COOLSCAN™ and COOLSCAN PLUS™

For a more thorough evaluation of your coolant, perform a COOLSCAN or COOLSCAN PLUS analysis, where available. See your John Deere dealer for information.

COOLSCAN is a trademark of Deere & Company
COOLSCAN PLUS is a trademark of Deere & Company

DX,COOL9 –19–19DEC03–1/1

Supplemental Coolant Additives

The concentration of coolant additives is gradually depleted during engine operation. For all recommended coolants, replenish additives between drain intervals by adding a supplemental coolant additive every 12 months or as determined necessary by coolant testing.

John Deere COOLANT CONDITIONER is recommended as a supplemental coolant additive in John Deere engines.

IMPORTANT: Do not add a supplemental coolant additive when the cooling system is drained and refilled with John DeereCOOL-GARD™.

If other coolants are used, consult the coolant supplier and follow the manufacturer's recommendation for use of supplemental coolant additives.

The use of non-recommended supplemental coolant additives may result in additive drop-out and gelation of the coolant.

Add the manufacturer's recommended concentration of supplemental coolant additive. DO NOT add more than the recommended amount.

COOL-GARD is a trademark of Deere & Company

DX,COOL4 –19–07NOV03–1/1

Operating in Warm Temperature Climates

John Deere engines are designed to operate using glycol base engine coolants.

Always use a recommended glycol base engine coolant, even when operating in geographical areas where freeze protection is not required.

IMPORTANT: Water may be used as coolant *in emergency situations only*.

Foaming, hot surface aluminum and iron corrosion, scaling, and cavitation will occur when water is used as the coolant, even when coolant conditioners are added.

Drain cooling system and refill with recommended glycol base engine coolant as soon as possible.

RG,01,DT7034 –19–29OCT97–1/1

01
002
16

Flush and Service Cooling System



TS281 –UN–23AUG88

CAUTION: Explosive release of fluids from pressurized cooling system can cause serious burns. Shut off engine. Only remove filler cap when cool enough to touch with bare hands. Slowly loosen cap to first stop to relieve pressure before removing cap completely.

IMPORTANT: Air must be expelled from cooling system when system is refilled. Follow procedure given in your operator's manual.

Whenever the aluminum timing gear cover or coolant pump are replaced, the cooling system should be completely drained. In addition to opening petcock on radiator, remove lower radiator hose when draining cooling system.

The ethylene glycol base (antifreeze) can become depleted of SCAs, allowing various acids to form that will damage engine components. In addition, heavy metals, such as lead, copper and zinc, accumulate in the ethylene glycol base. The heavy metals come from corrosion that occurs to some degree within a cooling system. When a coolant is saturated to the point where it can no longer hold heavy metals and other dissolved solids, they settle out and act as abrasives on engine parts.

NOTE: Refer to your operator's manual for a specific service interval.

Flush cooling system as described in your operator's manual. Clean cooling system with clean water and a cleaner such as FLEETGUARD® RESTORE™ or RESTORE PLUS™. Follow the instructions provided with the cleaner. Refill cooling system with the appropriate coolant solution. See DIESEL ENGINE COOLANT, earlier in this group.

FLEETGUARD is a registered trademark of the Cummins Engine Company.
RESTORE is a trademark of FLEETGUARD.
RESTORE PLUS is a trademark of FLEETGUARD.

Continued on next page

RG,01,DT7033 –19–29OCT97–1/2

IMPORTANT: NEVER overfill the system. A pressurized system needs space for heat expansion without overflowing at the top of the radiator. Coolant level should be at bottom of radiator filler neck.

Air must be expelled from cooling system when system is refilled. Loosen plug in side of thermostat housing to allow air to escape when filling system. Retighten plug when all the air has been expelled.

After adding new coolant solution, run engine until it reaches operating temperature. This mixes the coolant solution uniformly and circulates it through the entire system. After running engine, check coolant level and entire cooling system for leaks.

Contact your engine servicing dealer, if there are further questions.

RG,01,DT7033 –19–29OCT97–2/2

Disposing of Coolant

Improperly disposing of engine coolant can threaten the environment and ecology.

Use leakproof containers when draining fluids. Do not use food or beverage containers that may mislead someone into drinking from them.

Do not pour waste onto the ground, down a drain, or into any water source.

Inquire on the proper way to recycle or dispose of waste from your local environmental or recycling center, or from your engine servicing dealer.

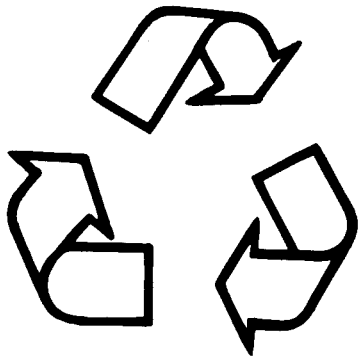

TS1133 –UN–26NOV90

RG,01,DT7032 –19–29OCT97–1/1

Section 02
Repair and Adjustments

Contents

Page

Group 010—Engine Rebuild

Engine Overhaul Guidelines 02-010-1
Engine Repair Stand 02-010-1
Engine Stand Safety Precautions 02-010-2
Install Adapters on Engine Repair Stand 02-010-3
Engine Lifting Procedure 02-010-4
Clean Engine 02-010-5
Disconnect Turbocharger Oil Inlet Line 02-010-6
Mount Engine on Repair Stand 02-010-7
Engine Mounted on Repair Stand 02-010-8
Engine Disassembly Sequence 02-010-8
Sealant Application Guidelines 02-010-12
Engine Assembly Sequence 02-010-13
Engine Break-In Guidelines 02-010-17
Perform Engine Break-In 02-010-18

Group 020—Cylinder Head and Valves (Two-Valve Head Engines)

General Information 02-020-1
Check and Adjust Valve Clearance 02-020-2
Measure Valve Lift 02-020-5
Remove Cylinder Head 02-020-7
Disassemble and Inspect Rocker Arm Shaft Assembly 02-020-14
Assemble Rocker Arm Assembly 02-020-15
Inspect, Measure, and Install Fuel Supply Pump Push Rod (If Applicable) 02-020-15
Inspect, Measure, and Assemble Camshaft Followers 02-020-17
Measure Valve Recess in Cylinder Head . . .02-020-19
Preliminary Cylinder Head and Valve Checks 02-020-20
Remove Valve Assembly 02-020-21
Inspect and Measure Valve Springs 02-020-21
Inspect Valve Rotators 02-020-22
Clean Valves 02-020-22
Inspect and Measure Valves 02-020-23
Grind Valves 02-020-24
Head Gasket Inspection and Repair Sequence 02-020-25
Inspect and Clean Cylinder Head 02-020-27
Check Cylinder Head Flatness 02-020-28
Measure Cylinder Head Thickness 02-020-29
Clean Injection Nozzle Bores 02-020-30
Clean Valve Guides 02-020-30
Measure Valve Guides 02-020-31

Page

Knurl Valve Guides 02-020-32
Clean and Inspect Valve Seats 02-020-32
Grind Valve Seats 02-020-33
Remove Valve Seat Inserts 02-020-35
Measure Valve Seat Bore in Cylinder Head 02-020-38
Install Valve Seat Inserts 02-020-39
Install Valves 02-020-39
Inspect Cylinder Head Cap Screws 02-020-40
Inspect and Clean Exhaust Manifold 02-020-40
Clean and Inspect Top Deck of Cylinder Block 02-020-41
Check Cylinder Liner Standout (Height Above Block) 02-020-42
Install Cylinder Head 02-020-43
Torque-Turn Method for Proper Torque 02-020-46
Install Rocker Arm Assembly 02-020-47
Inspect and Clean Ventilator Outlet Hose . . .02-020-48
Remove, Inspect, and Install Closed Crankcase Ventilation System (If Equipped) 02-020-49
Install Rocker Arm Cover 02-020-50
Complete Final Assembly 02-020-53

Group 021—Cylinder Head and Valves (Four-Valve Head Engines)

General Information 02-021-1
Check and Adjust Valve Clearance 02-021-1
Measure Valve Lift 02-021-5
Do Not Open High-Pressure Fuel System 02-021-6
Remove Cylinder Head 02-021-7
Inspect and Measure Valve Bridges 02-021-16
Disassemble and Inspect Rocker Arm Shaft Assembly 02-021-17
Assemble Rocker Arm Assembly 02-021-18
Inspect, Measure, and Install Fuel Supply Pump Push Rod 02-021-18
Inspect, Measure, and Assemble Camshaft Followers 02-021-20
Measure Valve Recess in Cylinder Head . . .02-021-22
Preliminary Cylinder Head and Valve Checks 02-021-23
Remove Valve Assembly 02-021-24
Inspect and Measure Valve Springs 02-021-25

Continued on next page

Page

Clean Valves 02-021-25
Inspect and Measure Valves 02-021-26
Grind Valves 02-021-27
Head Gasket Inspection and Repair Sequence 02-021-28
Inspect and Clean Cylinder Head 02-021-30
Check Cylinder Head Flatness 02-021-30
Measure Cylinder Head Thickness 02-021-31
Remove Fuel Injector Sleeves 02-021-32
Clean Fuel Injector Bores 02-021-32
Install Fuel Injector Sleeves 02-021-33
Clean Glow Plug Bores 02-021-34
Clean Valve Guides 02-021-34
Measure Valve Guides 02-021-35
Knurl Valve Guides 02-021-36
Clean and Inspect Valve Seats 02-021-36
Grind Valve Seats 02-021-37
Remove Valve Seat Inserts 02-021-37
Measure Valve Seat Bore in Cylinder Head 02-021-41
Install Valve Seat Inserts 02-021-42
Install Valves 02-021-43
Inspect Cylinder Head Cap Screws 02-021-44
Inspect and Clean Exhaust Manifold 02-021-44
Clean and Inspect Top Deck of Cylinder Block 02-021-45
Check Cylinder Liner Standout (Height Above Block) Four-Valve Head 02-021-46
Install Cylinder Head 02-021-47
Torque-Turn Method for Proper Torque 02-021-50
Install Fuel Injectors 02-021-51
Install Carrier Assembly 02-021-52
Install Rocker Arm Assembly 02-021-53
Inspect and Clean Ventilator Outlet Hose . . . 02-021-55
Remove, Inspect, and Install Closed Crankcase Ventilation System (If Equipped) 02-021-56
Install Rocker Arm Cover 02-021-57
Complete Final Assembly 02-021-58

Group 030—Cylinder Block, Liners, Pistons and Rods

Connecting Rods—General Information 02-030-1
Remove Pistons and Connecting Rods 02-030-2
Remove Cylinder Liners 02-030-5
Complete Disassembly of Cylinder Block (If Required) 02-030-7
Preliminary Liner, Piston and Rod Checks . . . 02-030-8
Disassemble Piston and Rod Assembly 02-030-9
Clean Pistons 02-030-10
Visually Inspect Pistons 02-030-11
Clean Cylinder Liners 02-030-12
Visually Inspect Cylinder Liners 02-030-13

Page

Check Piston Ring Groove Wear 02-030-15
Measure Piston Pin Bore 02-030-16
Measure Piston Skirt 02-030-17
Measure Piston Height 02-030-17
Determine Piston-to-Liner Clearance 02-030-18
Deglaze Cylinder Liners 02-030-20
Replace Piston and Liner Sets 02-030-20
Inspect and Measure Connecting Rod Bearings (Rods Removed from Engine) . . . 02-030-21
Inspect and Measure Connecting Rod Bearings (Rod and Crankshaft in Engine) 02-030-22
Inspect Rod and Cap 02-030-23
Inspect Piston Pins and Bushings 02-030-25
Remove Piston Pin Bushing 02-030-26
Clean and Inspect Connecting Rod Pin Bore 02-030-28
Install Piston Pin Bushing in Connecting Rod 02-030-29
Measure Rod Center-to-Center Bores 02-030-31
Inspect and Clean Cylinder Block 02-030-32
Clean Cylinder Liner O-Ring Bore 02-030-35
Measure Cylinder Block Main Bearing Bore 02-030-35
Measure Camshaft Follower Machined Bore in Block 02-030-36
Measure Camshaft Bushing Bores in Block 02-030-36
Measure Balancer Shaft Bushing ID in Block (4-Cylinder Engines) 02-030-38
Measure Cylinder Liners and Block Bores . . . 02-030-39
Measure Liner Flange Counterbore Depth in Block 02-030-40
Measure Liner Flange Thickness 02-030-40
Measure Cylinder Block Top Deck Flatness 02-030-41
Remove, Inspect, and Install Piston Cooling Orifices 02-030-42
Measure Fuel Supply Pump Push Rod Bore and Push Rod OD 02-030-43
Measure and Adjust Cylinder Liner Standout (Height Above Block) 02-030-44
Install Packing on Cylinder Liner and O-Rings in Block 02-030-45
Install Cylinder Liner in Block 02-030-47
Assemble Piston and Connecting Rod 02-030-49
Install Piston Rings 02-030-50
Install Piston and Connecting Rod Assembly 02-030-51
Torque-Turn Connecting Rod Cap Screws 02-030-55

Continued on next page

Page

Check Engine Rotation for Excessive Tightness 02-030-56
Measure Piston Protrusion 02-030-57
Complete Final Assembly 02-030-60

Group 040—Crankshaft, Main Bearings and Flywheel

Crankshaft and Main Bearing Failure Analysis 02-040-1
Inspect Vibration Damper (6.8 L Engines) 02-040-2
Remove Pulley or Vibration Damper and Pulley 02-040-3
Install Pulley or Vibration Damper and Pulley 02-040-6
Replace Front Crankshaft Oil Seal and Wear Sleeve 02-040-9
Check Crankshaft End Play 02-040-19
Inspect Flywheel 02-040-20
Check Flywheel Face Flatness 02-040-21
Check Pilot Bearing Bore Concentricity 02-040-21
Remove Flywheel 02-040-22
Replace Flywheel Ring Gear 02-040-23
Replace Pilot Bearing in Flywheel (If Equipped) 02-040-24
Replace Sleeve in Flywheel (If Equipped) . . . 02-040-25
Install Flywheel 02-040-26
Crankshaft Rear Oil Seal and Wear Sleeve Handling Precautions 02-040-27
Remove Crankshaft Rear Oil Seal and Wear Sleeve 02-040-27
Clean and Inspect Crankshaft Flange 02-040-32
Install Crankshaft Rear Oil Seal and Wear Sleeve 02-040-32
Remove Flywheel Housing 02-040-38
Remove and Install Crankshaft Timing Wheel (Two-Valve Head Engines with VP44 or DE10 Fuel Injection Pumps and All Four-Valve Head Engines) 02-040-39
Remove Crankshaft Main Bearings 02-040-40
Check Main Bearing Oil Clearance 02-040-42
Remove and Install Crankshaft Gear (Crankshaft Installed in Engine) 02-040-43
Remove Crankshaft 02-040-45
Inspect Crankshaft 02-040-46
Measure Crankshaft Journals and Main Bearing ID 02-040-47
Measure Main Thrust Journal Width and Thrust Bearing Width 02-040-48
Crankshaft Grinding Guidelines 02-040-49
Crankshaft Grinding Specifications 02-040-50
Measure Assembled ID of Main Bearing Caps 02-040-51

Page

Install Main and Thrust Bearing Inserts in Block 02-040-52
Install Crankshaft 02-040-54
Install Flywheel Housing 02-040-57
Complete Final Assembly 02-040-60

Group 050—Camshaft, Balancer Shafts and Timing Gear Train

Measure Valve Lift 02-050-1
Remove Timing Gear Cover 02-050-3
Remove and Install Camshaft Bushing with Front Plate Installed 02-050-6
Remove and Install Camshaft Gear-Driven Auxiliary Drive 02-050-10
Measure Camshaft End Play 02-050-11
Measure Balancer Shaft End Play (If Equipped—4-Cylinder Engines) 02-050-11
Measure Idler Gear End Play 02-050-12
Measure Timing Gear Backlash 02-050-13
Remove Camshaft 02-050-14
Visually Inspect Camshaft 02-050-17
Measure Camshaft Thrust Plate Clearance and Thickness 02-050-17
Inspect and Measure Camshaft Bushing ID and Journal OD 02-050-18
Measure Camshaft Lobe Height 02-050-19
Inspect Camshaft Gear 02-050-19
Inspect Camshaft Followers 02-050-20
Inspect, Measure, and Install Fuel Supply Pump Push Rod 02-050-21
Remove Balancer Shafts (If Equipped—4-Cylinder Engines) 02-050-22
Inspect and Measure Balancer Shaft Bushings and Journals 02-050-23
Remove and Install Balancer Shaft Bushings 02-050-24
Inspect Balancer Shaft Gears and Thrust Plates 02-050-25
Remove and Install Balancer Shaft Gears . . . 02-050-26
Remove Cylinder Block Front Plate 02-050-27
Measure Idler Gear Bushing and Shaft 02-050-30
Remove Idler Gear Bushings 02-050-31
Install Idler Gear Bushings 02-050-32
Remove Lower and Upper Idler Shafts 02-050-33
Clean and Inspect Front Plate 02-050-33
Transfer Fuel Injection Pump Timing Mark onto Replacement Front Plate (Two-Valve Head Engine with Mechanical Fuel Injection) 02-050-34
Install Idler Shaft Spring Pins (If Equipped) 02-050-35

Continued on next page

Page

Install Upper Idler Shaft in Front Plate. 02-050-35
Install Lower Idler Shaft in Front Plate. 02-050-36
Install Cylinder Block Front Plate. 02-050-37
Install and Time Balancer Shafts (If Equipped—4-Cylinder Engines) 02-050-38
Install Camshaft 02-050-43
Clean and Inspect Timing Gear Cover 02-050-49
Install Timing Gear Cover 02-050-50
Remove and Install Magnetic Pick-Up Sensor. 02-050-54
Complete Final Assembly 02-050-55

Group 060—Lubrication System
General Lubrication System Information 02-060-1
Remove, Inspect, and Install Oil Filter Base 02-060-1
Remove, Inspect, and Install Oil Cooler 02-060-7
Remove, Inspect, and Install Oil Bypass Valve 02-060-13
Remove and Install Oil Filter Bypass Valve (Extended-Life Filter) 02-060-14
Remove and Install Oil Pressure Regulating Valve 02-060-14
Remove and Install Oil Fill Adapter 02-060-19
Remove and Install Dipstick Tube with Oil Pan Installed 02-060-21
Remove and Install Dipstick Tube with Fitting 02-060-23
Remove, Inspect, and Install Oil Pump Pick-Up Tube Assembly. 02-060-24
Engine Oil Pump Assembly. 02-060-24
Remove Engine Oil Pump. 02-060-25
Inspect and Measure Clearances 02-060-26
Complete Oil Pump Disassembly 02-060-28
Assemble Engine Oil Pump. 02-060-29
Install Engine Oil Pump. 02-060-30
Install Oil Pan 02-060-32

Group 070—Cooling System
Remove Coolant Manifold/Thermostat Cover and Thermostat 02-070-1
Install Coolant Manifold/Thermostat Cover and Thermostat 02-070-2
Remove and Install Coolant Manifold/Thermostat Cover and Thermostat (High Flow Single Thermostat) 02-070-4
Remove and Install Coolant Manifold and Thermostats (Dual Thermostats) 02-070-7
Remove and Install Coolant Manifold, Thermostats and Side Port (Four-Valve Head) 02-070-8

Page

Remove and Install Thermostat Cover and Thermostats (Tier 3) 02-070-9
Test Thermostat(s) 02-070-10
Remove Coolant Pump 02-070-11
Coolant Pump Assembly 02-070-12
Disassemble Coolant Pump 02-070-13
Inspect, Clean, and Measure Coolant Pump Parts 02-070-14
Assemble Coolant Pump. 02-070-15
Install Coolant Pump 02-070-17
Cooling System Deaeration. 02-070-19
Remove and Install Automatic (Spring) Belt Tensioner 02-070-19
Checking Belt Tensioner Spring Tension and Belt Wear. 02-070-21
Manual Belt Tensioner Adjustment Using Belt Tension Gauge 02-070-23
Manual Belt Tensioner Adjustment Using Belt Tension Tool (Alternate Method for Engines without Auxiliary Drive.) 02-070-24
Inspect and Install Fan Assembly 02-070-26
Remove and Inspect Fan Drive Assembly. . .02-070-27
Replace Bearings in Adjustable Fan Drive Assembly. 02-070-28
Replace Bearings in Heavy-Duty, Adjustable Fan Drive Assembly 02-070-31
Install Fan Drive Assembly 02-070-33
Remove and Install Fan Drive Assembly (2254 Combine). 02-070-36
Remove and Install Coolant Heater (If Equipped) 02-070-37
Remove and Install Cold Start Advance Switch (If Equipped). 02-070-38

Group 080—Air Intake and Exhaust System
Extending Turbocharger Life 02-080-1
Remove Turbocharger. 02-080-3
Turbocharger Failure Analysis. 02-080-5
Turbocharger Inspection 02-080-7
Perform Radial Bearing Clearance Test 02-080-14
Adjust Turbocharger Wastegate Actuator (If Equipped) 02-080-16
Remove and Install Variable Geometry Turbocharger Actuator (If Equipped) 02-080-17
Remove and Install Actuator Linkage 02-080-19
Repair Turbocharger 02-080-21
Prelube Turbocharger 02-080-22
Install Turbocharger 02-080-23
Turbocharger Break-In 02-080-27
Recommendations for Turbocharger Use . . .02-080-27

Continued on next page

Page

Remove, Inspect, and Install Exhaust Manifold 02-080-28
Remove and Install Air-to-Air Aftercooler 02-080-29
Remove and Install EGR Exhaust Tube (Tier 3/Stage IIIA) 02-080-30
Remove and Install EGR Coolant Inlet Tube (Tier 3/Stage IIIA) 02-080-31
Remove and Install EGR Cooler (Tier 3/Stage IIIA) 02-080-32
Remove, Inspect, and Install EGR Valve (Tier 3/Stage IIIA) 02-080-33
Remove and Install Air Intake Pipe 02-080-34
Remove, Inspect, and Install Intake Manifold (Four-Valve Head) 02-080-35
Remove, Inspect, and Install Air Inlet and Mixing Sleeve (Tier 3/Stage IIIA) 02-080-36
Remove, Inspect, and Install Intake Manifold (Tier 3/Stage IIIA) 02-080-37
Remove and Install Air Heater (If Equipped) 02-080-38
Remove and Install Starting Aid (If Equipped) 02-080-39

Group 090—Fuel System
Fuel System 02-090-1

Group 100—Starting and Charging Systems
Remove and Install Starter 02-100-1
Remove and Install Alternator 02-100-2

Engine Overhaul Guidelines

Engine life and performance will vary depending on operating conditions and the level of regular engine maintenance. Engines can be brought back to original performance standards through proper overhaul procedures and replacement of parts with genuine John Deere service parts. Overhauling the engine prior to failure can avoid costly repairs and downtime.

Consider installing a John Deere overhaul kit when:

- The engine begins to experience power loss and there are no known engine component failures.
- The engine is hard to start due to low cranking compression.
- The engine begins to smoke and there are no known engine component failures.
- The engine begins to use oil. Refer to Section 04 for acceptable oil consumption.
- The engine has high usage hours and the owner wants to take preventive measures to avoid high-cost repairs and costly downtime.

Overhaul kits may be available for John Deere engines in your area.

DPSG,OUO1032,3410 –19–15JUN00–1/1

Engine Repair Stand

NOTE: Only the 2722 kg (6000 lb) heavy duty engine repair stand (A) No. D05223ST manufactured by Owatonna Tool Co., Owatonna, Minnesota, is referenced in this manual. When any other repair stand is used, consult the manufacturer's instructions for mounting the engine.

Refer to machine technical manual for steps to remove engine from machine.

A—D05223ST Engine Repair Stand

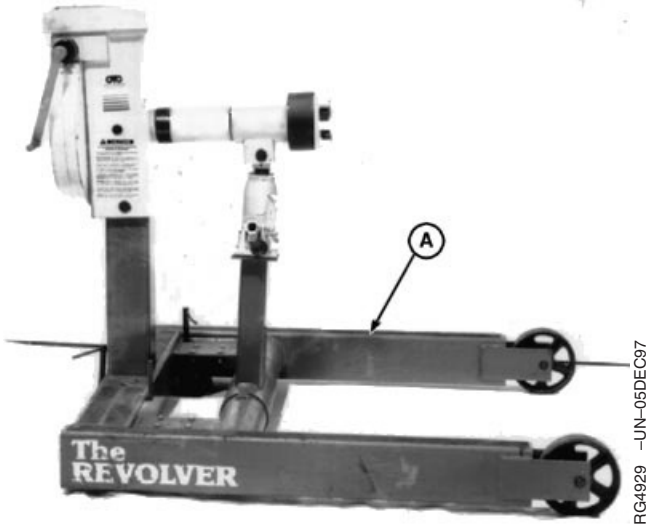

Engine Repair Stand

RG,01,DT7044 –19–01OCT01–1/1

Engine Stand Safety Precautions

The engine repair stand should be used only by qualified service technicians familiar with this equipment.

To maintain shear strength specifications, alloy steel Class 12.9 or SAE Grade 8 or higher cap screws must be used to mount adapters and engine to repair stand. Use LOCTITE® 242 Thread Lock and Sealer (Medium Strength) on cap screws when installing lifting straps on engine. Tighten cap screws to specifications given.

For full thread engagement, be certain that tapped holes in adapters and engine blocks are clean and not damaged. A thread length engagement equal to 1-1/2 screw diameters minimum is required to maintain strength requirements.

To avoid structural or personal injury, do not exceed the maximum capacity rating of 2722 kg (6000 lb). Maximum capacity is determined with the center of the engine located not more than 330 mm (13 in.) from the mounting hub surface of the engine stand.

The center of balance of an engine must be located within 51 mm (2 in.) of the engine stand rotating shaft.

Engine center of balance is generally located a few millimeters above the crankshaft.

To prevent possible personal injury due to engine slippage, recheck to make sure engine is solidly mounted before releasing support from engine lifting device.

Never permit any part of the body to be positioned under a load being lifted or suspended. Accidental slippage may result in personal injury.

The lifting jack is to be used when it is necessary to lift the engine for rotation. When working on the engine, the jack should be at its lowest position to keep the center of gravity and the possibility of tipping low.

To prevent possible personal injury due to sudden engine movement, lower the engine by operating jack release valve slowly. Do not unscrew release valve knob more than two turns from its closed position.

LOCTITE is a registered trademark of Loctite Corp.

RG,RG34710,45 –19–01OCT01–1/1

Install Adapters on Engine Repair Stand

1. Attach the D05226ST Special Adapter (B) to mounting hub (A) of the engine repair stand, using SAE Grade 8 socket head cap screws (D), to the following specifications.

Specification

D05226ST Special Adapter-to-Mounting Hub SAE Grade 8 Socket Head Cap Screws.—Torque ..... 600 N•m (450 lb-ft).

2. Attach the 62835[1] Engine Adapter (C) to the special adapter, using four SAE Grade 8 caps screws (E), to the following specifications.

Specification

62835[1] Engine Adapter-to-Special Adapter SAE Grade 8 Cap Screws.—Torque ..... 135 N•m (100 lb-ft).

A—Mounting Hub
B—D05226ST Special Adapter
C—62835 Engine Adapter
D—Socket Head Cap Screws
E—Cap Screws

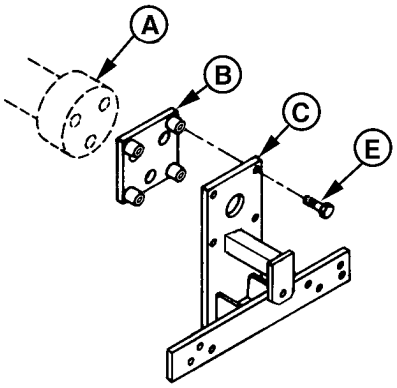

RG7783 –UN–11NOV97

Engine Repair Stand Adapters

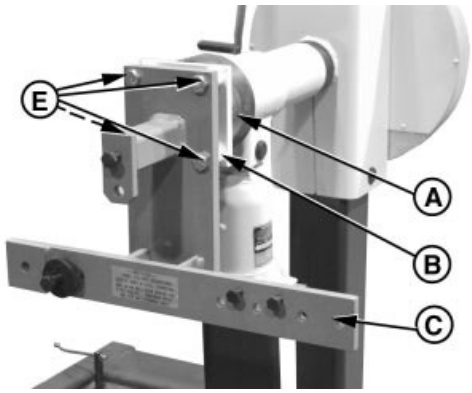

RG7781 –UN–11NOV97

Engine Repair Stand Adapters

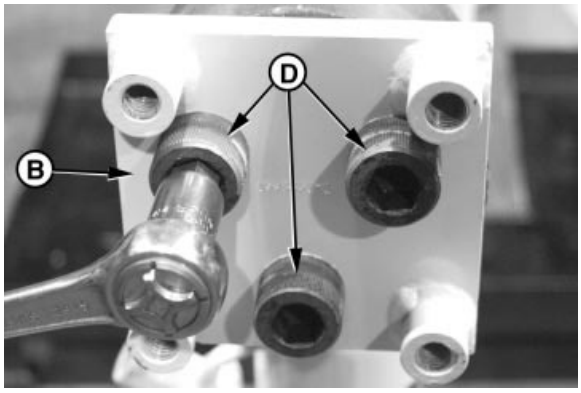

RG7938 –UN–13NOV97

Engine Repair Stand Adapters

[1]Part of JT07268 Engine Repair Stand Adapter Kit

RG,01,DT7049 –19–07NOV03–1/1

Engine Lifting Procedure

02
010
4

CAUTION: The only recommended method for lifting the engine is with JDG23 Engine Lifting Sling and safety approved lifting straps that come with engine. Use extreme caution when lifting and NEVER permit any part of the body to be positioned under an engine being lifted or suspended.

NOTE: If engine lifting straps are misplaced, they should be procured through service parts.

1. Apply TY9370 LOCTITE® 242 Thread Lock and Sealer to lifting strap cap screws. Install lifting straps (B) and tighten cap screws to the following specifications.

	Specification
Engine Lifting Strap Cap Screws—Torque	170 N•m (125 lb-ft)

IMPORTANT: Lift engine with longitudinal loading on lifting sling and lifting brackets only. Angular loading greatly reduces lifting capacity of sling and brackets.

Lift spacing on sling is adjustable. Position each lifting point so that engine hangs level when lifted.

2. Attach the JDG23 Engine Lifting Sling (A) to engine lifting straps (B) and overhead hoist or floor crane.

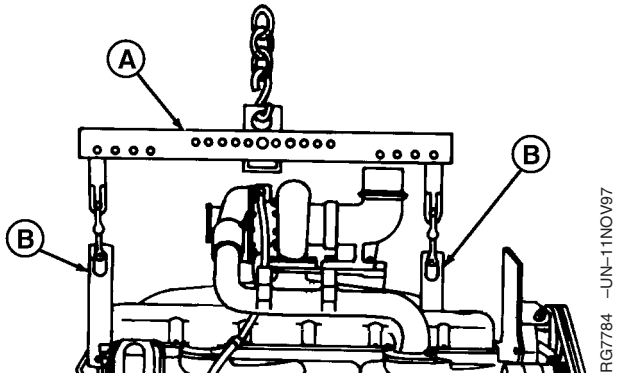

Lifting Engine with Lifting Sling

A—JDG23 Engine Lifting Sling
B—Lifting Straps

LOCTITE is a registered trademark of Loctite Corp.

Continued on next page

RG,03,JW7723 –19–21NOV03–1/2

Lifting straps are designed to lift the engine and small accessories, such as hydraulic pumps and air compressors mounted to the engine auxiliary gear drive, or belt-driven components, such as air conditioning compressors and alternators. If larger components, such as PTOs, transmissions, generators or air compressors, are attached to other locations on the engine, the lifting straps provided with the engine are not intended for this purpose. Technician is responsible for providing adequate lifting devices under these situations. See machine technical manual for additional information on removing engine from machine.

NOTE: Use of an engine lifting sling (as shown) is the ONLY APPROVED method for lifting engine.

3. Carefully lift engine and slowly lower to desired location.

RG,03,JW7723 –19–21NOV03–2/2

Clean Engine

1. Cap or plug all openings (air intake, exhaust, fuel, coolant, etc.).

2. Remove electrical components (electronic control module-ECM, starter, alternator, etc.). Cover electrical components that are not removed (sensors, wiring harness, ECM connectors, etc.) with plastic and tape securely to prevent moisture damage.

IMPORTANT: Never steam clean or pour cold water on an injection pump while it is still warm. To do so may cause seizure of pump parts. Avoid fuel pumps, injectors, bearings, belts and hoses, etc.

3. Thoroughly steam clean engine.

RG,RG34710,49 –19–07NOV03–1/1

Disconnect Turbocharger Oil Inlet Line

1. Drain all engine oil and coolant, if not previously done.

02
010
6

IMPORTANT: When servicing turbocharged engines on a rollover stand, disconnect turbocharger oil inlet line (A) from oil filter housing or turbocharger before rolling engine over. Failure to do so may cause a hydraulic lock upon starting engine. Hydraulic lock may cause possible engine failure.

Hydraulic lock occurs when trapped oil in the oil filter housing drains through the turbocharger, the exhaust and intake manifolds, and then into the cylinder head.

After starting the engine, the trapped oil in the manifold and head is released into the cylinder(s), filling them with oil, causing hydraulic lock and possible engine failure.

2. Disconnect turbocharger oil inlet line at turbocharger or oil filter housing.

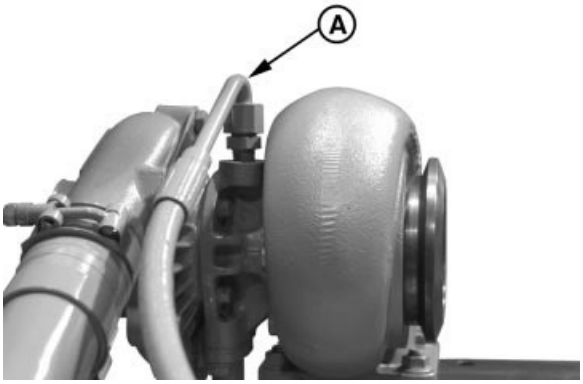

Turbocharger Oil Inlet Line

A—Oil Inlet Line

RG,01,DT7046 –19–29OCT97–1/1

Mount Engine on Repair Stand

CAUTION: NEVER remove the overhead lifting equipment until the engine is securely mounted onto the repair stand and all mounting hardware is tightened to specified torque. Always release the overhead lifting equipment slowly.

On engines equipped with a low-profile turbocharger, remove turbocharger before attaching engine to repair stand.

On engines with a left-hand oil fill tube, remove tube before mounting engine to repair stand.

NOTE: See next procedure for illustration of an engine that has been mounted on repair stand.

Mount the engine to 62835[1] Engine Adapter as described below. A label (H) is affixed to the engine adapter for aid in explaining spacer used for each engine model.

NOTE: No. 221668[1] Spacer (G) is used on the outside of the engine adapter for the 4045 Engines and on the inside (next to engine) on 6068 Engines.

Some later engines may not require the spacer.

4045 Engines

Hole A—(2) No. 214490[1] (M12 x 1.75 x 35 mm)

Hole B—(1) No. 221664[1] (M14 x 2.00 x 35 mm)

Hole C—(1) No. 221665[1] (M14 x 2.00 x 60 mm) with No. 221668[1] Spacer

6068 Engines

Hole D—(2) No. 214490[1] (M12 x 1.75 x 35 mm)

Hole E—(1) No. 221664[1] (M14 x 2.00 x 35 mm)

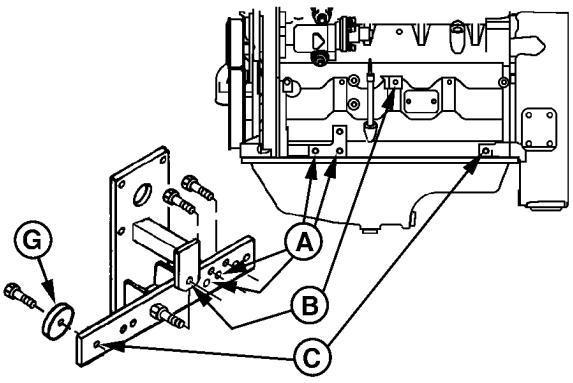

RG9058 –UN–16MAR98

4045 Engine

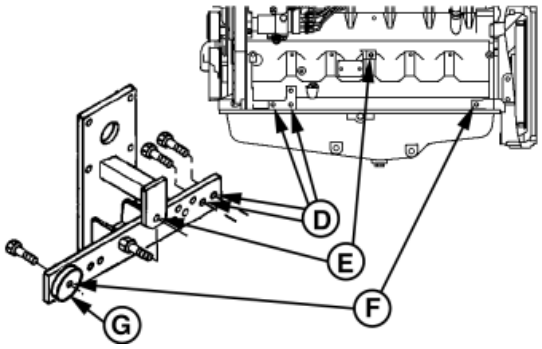

RG7787 –UN–11NOV97

6068 Engine



RG8089 –UN–18NOV97

Engine Mounting Label

G—No. 221668 Spacer
H—Label

[1] *Part of JT07268 Engine Adapter Kit*

Continued on next page

Hole F—(1) No. 221665[1] (M14 x 2.00 x 60 mm) with No. 221668[1] Spacer

NOTE: Four threaded holes in engine mounting adapter are for storing mounting hardware.

02
010
8

Specification	
Engine Repair Stand M12 Cap Screws—Torque	140 N•m (105 lb-ft)
Engine Repair Stand M14 Cap Screws—Torque	225 N•m (165 lb-ft)

[1] Part of JT07268 Engine Adapter Kit

RG,03,JW7724 –19–18MAY00–2/2

Engine Mounted on Repair Stand

A—Engine
B—62835 Engine Adapter
C—D05226ST Special Adapter
D—Engine Repair Stand

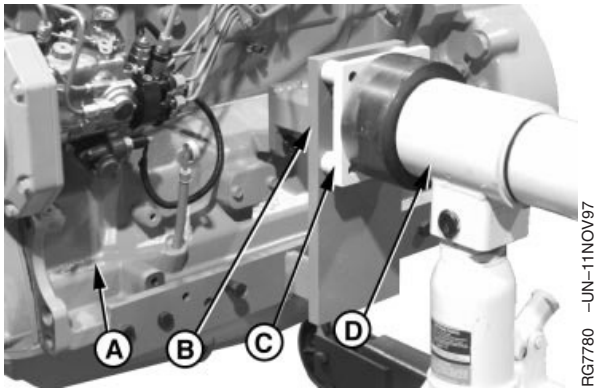

6068 Engine

RG,03,DT7334 –19–11NOV97–1/1

Engine Disassembly Sequence

The following sequence is suggested when complete disassembly for overhaul is required. Refer to the appropriate repair group for removal, inspection and repair of individual engine components.

Continued on next page

RG,04,JW7725 –19–15MAY02–1/4

ENGINE DISASSEMBLY SEQUENCE	
Procedure	**Reference**
Mount engine on a safety approved repair stand.	See MOUNT ENGINE ON REPAIR STAND in this group.
Drain coolant and oil. Perform John Deere OILSCAN Plus® and COOLSCAN® analysis.	See OILSCAN Plus® and COOLSCAN® in Section 01, Group 002.
Remove fan belts, fan, and belt tensioner.	See REMOVE AND INSTALL AUTOMATIC (SPRING) BELT TENSIONER in Group 070.
Remove alternator.	See REMOVE AND INSTALL ALTERNATOR in Group 100.
Remove turbocharger (if equipped). Remove exhaust manifold.	See REMOVE TURBOCHARGER in Group 080. See REMOVE, INSPECT AND INSTALL EXHAUST MANIFOLD in Group 080.
Remove rocker arm cover and vent tube. If option code label is located on rocker arm cover, be careful not to damage label.	See REMOVE CYLINDER HEAD in Group 020 or 021.
On applications where the coolant manifold is not an integral part of cylinder head, remove coolant manifold or thermostat housing.	See COOLING SYSTEM in Group 070.
Remove oil cooler piping and coolant pump.	See REMOVE COOLANT PUMP in Group 070.
Remove dipstick, oil filter, oil cooler, and adapter housing (if equipped).	See REMOVE, INSPECT AND INSTALL OIL COOLER in Group 060.
Remove fuel filter assembly.	See appropriate procedure: • REPLACE FINAL FUEL FILTER/WATER BOWL AND PRE-FILTER/WATER BOWL in Group 090 of CTM331 (Level 12 Electronic Fuel System with Stanadyne DE10 Pump). • REMOVE AND INSTALL FINAL FUEL FILTER/WATER SEPARATOR BASE in Group 090 of CTM170 (Level 4 Electronic Fuel Systems with Bosch VP44 Pump). • REMOVE AND INSTALL FINAL FUEL FILTER/WATER BOWL AND/OR PRE-FILTER/WATER BOWL BASE in Group 090 of CTM331 (Level 12 Electronic Fuel Systems with Stanadyne DE10 Pump). • REMOVE AND INSTALL FINAL FUEL FILTER/WATER BOWL AND/OR PRE-FILTER/WATER BOWL BASE in Group 090 of CTM284 (Level 1 Electronic Fuel System with Delphi DP201 Pump). • REMOVE AND INSTALL PRE-FILTER/WATER BOWL BASE in Group 090 of CTM220 (Level 11 Electronic Fuel Systems with Denso High Pressure Common Rail). • REMOVE AND INSTALL FINAL FUEL FILTER/WATER BOWL BASE in Group 090 of CTM220 (Level 11 Electronic Fuel Systems with Denso High Pressure Common Rail).

OILSCAN is a registered trademark of Deere & Company.
COOLSCAN is a trademark of Deere & Company

Continued on next page

RG,04,JW7725 –19–15MAY02–2/4

ENGINE DISASSEMBLY SEQUENCE	
Procedure	**Reference**
Remove fuel supply pump and fuel lines.	See appropriate procedure: • REMOVE LUCAS AND STANADYNE FUEL SUPPLY PUMP in Group 090 of CTM207 (Mechanical Fuel Systems). • REMOVE DENSO IN-LINE FUEL SUPPLY PUMP in Group 090 of CTM207 (Mechanical Fuel Systems). • REMOVE MOTORPAL FUEL SUPPLY PUMP in Group 090 of CTM207 (Mechanical Fuel Systems). • REMOVE FUEL SUPPLY PUMP in Group 090 of CTM 331 (Level 12 Electronic Fuel Systems with Stanadyne DE10 Pump). • REMOVE MECHANICAL FUEL TRANSFER PUMP in Group 090 of CTM220 (Level 11 Electronic Fuel Systems with Denso High Pressure Common Rail).
Remove injection lines and injection pump.	See appropriate procedure: • REMOVE STANADYNE MODEL DB2 AND DB4 INJECTION PUMP in Group 090 of CTM207 (Mechanical Fuel Systems). • REMOVE LUCAS FUEL INJECTION PUMP in Group 090 of CTM207 (Mechanical Fuel Systems). • REMOVE DENSO FUEL INJECTION PUMP in Group 090 of CTM207 (Mechanical Fuel Systems). • REMOVE MOTORPAL FUEL INJECTION PUMP in Group 090 of CTM207 (Mechanical Fuel Systems). • REMOVE BOSCH VP44 FUEL INJECTION PUMP in Group 090 of CTM170 (Level 4 Electronic Fuel Systems with Bosch VP44 Pump). • REMOVE INJECTION PUMP in Group 090 of CTM331 (Level 12 Electronic Fuel Systems with Stanadyne DE10 Pump). • REMOVE FUEL INJECTION PUMP in Group 090 of CTM284 (Level 1 Electronic Fuel System with Delphi DP201 Pump). • REMOVE AND INSTALL HIGH PRESSURE FUEL PUMP in Group 090 of CTM220 (Level 11 Electronic Fuel Systems with Denso High Pressure Common Rail). • REMOVE AND INSTALL HIGH PRESSURE COMMON RAIL in Group 090 of CTM220 (Level 11 Electronic Fuel Systems with Denso High Pressure Common Rail).
Remove injection nozzles.	See appropriate procedure: • REMOVE FUEL INJECTION NOZZLES in Group 090 of CTM 207 (Mechanical Fuel Systems). • REMOVE FUEL INJECTION NOZZLES in Group 090 of CTM170 (Level 4 Electronic Fuel Systems with Bosch VP44 Pump). • REMOVE FUEL INJECTION NOZZLES in Group 090 of CTM331 (Level 12 Electronic Fuel Systems with Stanadyne DE10 Pump). • REMOVE FUEL INJECTION NOZZLES in Group 090 of CTM284 (Level 1 Electronic Fuel System with Delphi DP201 Pump). • REMOVE ELECTRONIC INJECTORS in Group 090 of CTM220 (Level 11 Electronic Fuel Systems with Denso High Pressure Common Rail).
Remove starter motor.	See REMOVE AND INSTALL STARTER in Group 100.
Remove rocker arm assembly and push rods. Keep rods in order. Check for bent push rods and condition of wear pad contact surfaces on rockers.	See REMOVE CYLINDER HEAD in Group 020 or 021.

Continued on next page

RG,04,JW7725 –19–15MAY02–3/4

ENGINE DISASSEMBLY SEQUENCE	
Procedure	**Reference**
Remove cylinder head. Check piston protrusion.	See REMOVE CYLINDER HEAD in Group 020 or 021. See MEASURE PISTON PROTRUSION in Group 030.
Remove camshaft followers. Keep followers in order.	See INSPECT CAMSHAFT FOLLOWERS in Group 050.
Remove flywheel. Remove flywheel housing.	See REMOVE FLYWHEEL in Group 040. See REMOVE FLYWHEEL HOUSING in Group 040.
Remove oil pan.	Drain oil and remove oil pan.
Remove crankshaft pulley.	See REMOVE PULLEY OR VIBRATION DAMPER AND PULLEY in Group 040.
Remove oil pressure regulating valve assembly and cap (early engines).	See REMOVE AND INSTALL OIL PRESSURE REGULATING VALVE in Group 060.
Remove timing gear cover.	See REMOVE TIMING GEAR COVER in Group 050.
Remove oil pump drive gear, outlet tube, and pump body.	See REMOVE ENGINE OIL PUMP in Group 060.
Remove timing gears and camshaft. Perform wear checks.	See REMOVE CAMSHAFT in Group 050.
Remove balancer shafts, if equipped (4045 engines).	See REMOVE BALANCER SHAFTS in Group 050.
Remove one piece oil pressure regulating valve assembly (later engines).	See REMOVE AND INSTALL OIL PRESSURE REGULATING VALVE in Group 060.
Remove engine front plate.	See REMOVE CYLINDER BLOCK FRONT PLATE in Group 050.
Remove oil bypass valve.	See REMOVE, INSPECT, AND INSTALL OIL BYPASS VALVE in Group 060.
Stamp cylinder number on connecting rod. Perform wear checks with PLASTIGAGE®. Remove pistons and rods.	See INSPECT AND MEASURE CONNECTING ROD BEARINGS in Group 030.
Perform wear checks with PLASTIGAGE®. Remove crankshaft and main bearings.	See REMOVE CRANKSHAFT in Group 040.
Remove cylinder liners and mark each one with cylinder number.	See REMOVE CYLINDER LINERS in Group 030.
Remove piston cooling orifices.	See REMOVE, INSPECT, AND INSTALL PISTON COOLING ORIFICES in Group 030.
Remove balancer shaft bushings, if equipped (4045 engines), and camshaft bushing.	See REMOVE AND INSTALL CAMSHAFT BUSHINGS in Group 050. See REMOVE AND INSTALL BALANCER SHAFT BUSHINGS in Group 050.
Remove cylinder block plugs and serial number plate when block is to be put in a “hot tank”.	See INSPECT AND CLEAN CYLINDER BLOCK in Group 030.
Clean upper and lower liner bores with nylon brush.	See CLEAN CYLINDER LINERS in Group 030.
Measure cylinder block.	(Groups 030, 040 and 050.)

PLASTIGAGE is a registered trademark of the DANA Corp.

RG,04,JW7725 –19–15MAY02–4/4

Sealant Application Guidelines

02
010
12

Listed below are sealants which have been tested and are used by the John Deere factory to control leakage and ensure hardware retention. ALWAYS use the following recommended sealants when assembling your John Deere Engine to ensure quality performance.

LOCTITE® thread sealants are designed to perform to sealing standards with machine oil residue present. If excessive machine oil or poor cleanliness quality exist, clean with solvent. Refer to John Deere Merchandise and Parts Sales Manual for ordering information.

IMPORTANT: LOCTITE® gasket materials are NOT designed to work with oil residue present. Oil residues must be cleaned from surfaces before applying gasket material.

LOCTITE® 242 Thread Lock and Sealer (Medium Strength) (Blue):

TY9370, 6 ml tube/T43512, 50 ml tube

- Plugs and fittings: fuel filter base, fuel transfer pump, oil filter base housing, and cylinder block oil galleries.
- Cap screws: injection pump access cover, electronic tachometer cover, oil filler inlet, flywheel, fuel transfer pump, oil cooler housing-to-cylinder block (open holes only) and timing hole cover.
- Oil pressure sending unit.

LOCTITE® 271 Thread Lock and Sealer (High Strength) (Clear):

TY9371, 6 ml tube/T43513, 50 ml bottle

- Studs: water pump-to-cylinder block, injection pump-to-front plate.
- Oil filter nipple.
- Oil dipstick tube and fitting.

LOCTITE® 277 Rigid Form-In-Place Gasket (High Strength) (Red):

T43514, 50 ml bottle

- Steel cap plugs: cylinder block and cylinder head.
- O-ring adapter for oil pump outlet tube.
- Nipples and elbows which are pressed into place, water pump housing, and oil cooler cover.
- Torque converter access hole plug.

LOCTITE® 515 Flexible Form-In-Place Gasket (General Purpose) (Purple):

PM38655, 50 ml bottle

- Flywheel housing-to-cylinder block.
- Flywheel housing-to-oil pan.
- Front and rear face of cylinder block.
- Front plate/timing gear cover-to-oil pan.

LOCTITE® 592 Pipe Sealant with TEFLON® (White):

TY9374, 6 ml tube/TY9375, 50 ml tube

- Pipe plugs: cylinder block (water manifold), thermostat housing, water pump, flywheel housing (drain).
- Injection pump governor cover fitting (fuel return).
- Temperature sending unit.
- Oil pan (drain hose, drain valve, and elbow drain fitting).
- Connectors: turbo line, turbo drain, and water return-to-cylinder block.
- Adapter fitting and plug for turbo lube on dual oil filter base.
- Air heater.

LOCTITE is a registered trademark of Loctite Corp.
TEFLON is a registered trademark of Du Pont Co.

Continued on next page

LOCTITE® 620 High-Temperature Retaining Compound (Light Green):

TY15941, 50 ml tube

- Fuel injection nozzle sleeve (4-Valve cylinder head)

LOCTITE® 680 Maximum Strength Retaining Compound (Green):

TY15969, 50 ml tube

- Crankshaft wear sleeve.
- Camshaft nose.

HYLOMAR 101 Silicone Sealant (White)

PM710XX280, 85 gm tube

- Coolant pump insert.

RTV Silicone Sealant Form-In-Place Gasket (Blue):[1]

TY16021, 50 ml tube

- Injection pump timing gear cover ONLY when traditional gasket is not available.

PT569 NEVER-SEEZ® Compound:

PT569, 227 g brush/PT506, 453 g spray

- Cap screws: exhaust manifold and turbine housing-to-center housing.

NEVER-SEEZ is a registered trademark of the Emhart Chemical Group.

[1] Use DD15664 LOCTITE 515 Flexible Sealant when servicing an engine within the European Market/Service Area. Follow manufacturer's directions on package when using and storing sealant.

RG,04,JW7726 –19–15MAY02–2/2

02
010
13

Engine Assembly Sequence

The following assembly sequence is suggested when engine has been completely disassembled. Be sure to check run-out specifications, clearance tolerances, torques, etc., as engine is assembled. Refer to the appropriate repair group when assembling engine components.

Continued on next page

RG,04,DT7335 –19–15MAY02–1/5

ENGINE ASSEMBLY SEQUENCE	
Procedure	**Reference**
Install all plugs and serial number plate in cylinder block (if removed).	See INSPECT AND CLEAN CYLINDER BLOCK in Group 030.
Install piston cooling orifices.	See REMOVE, INSPECT, AND INSTALL PISTON COOLING ORIFICES in Group 030.
Install new balancer shaft bushings, if equipped (4045 engines), and a new camshaft bushing.	See REMOVE AND INSTALL CAMSHAFT BUSHINGS WITH FRONT PLATE INSTALLED in Group 050. See REMOVE AND INSTALL BALANCER SHAFT BUSHINGS in Group 050.
Install cylinder liners without O-rings. Measure liner height. Install liners with O-rings.	See INSTALL CYLINDER LINER IN BLOCK in Group 030.
Install main bearings and crankshaft. PLASTIGAGE® bearings.	See INSTALL CRANKSHAFT in Group 040.
Install flywheel housing. Install rear oil seal. Install flywheel.	See INSTALL FLYWHEEL HOUSING in Group 040. See INSTALL CRANKSHAFT REAR OIL SEAL AND WEAR SLEEVE in Group 040. See INSTALL FLYWHEEL in Group 040.
Install pistons and rods. Measure piston protrusion.	See INSTALL PISTON AND CONNECTING ROD ASSEMBLY in Group 030.
Install oil bypass valve.	See REMOVE, INSPECT, AND INSTALL OIL BYPASS VALVE in Group 060.
Install front plate.	See INSTALL CYLINDER BLOCK FRONT PLATE in Group 050.
Install one piece oil pressure regulating valve (later engines).	See REMOVE AND INSTALL OIL PRESSURE REGULATING VALVE in Group 060.
Install balancer shafts, if equipped (4045 engines). Check end play.	See INSTALL AND TIME BALANCER SHAFTS in Group 050.
Install oil outlet tube, O-ring in block, and oil pump.	See INSTALL ENGINE OIL PUMP in Group 060.

PLASTIGAGE is a registered trademark of the DANA Corp.

Continued on next page

RG,04,DT7335 –19–15MAY02–2/5

ENGINE ASSEMBLY SEQUENCE	
Procedure	**Reference**
Install injection lines and injection pump.	See appropriate procedure: • INSTALL STANADYNE MODEL DB2 AND DB4 INJECTION PUMP in Group 090 of CTM207 (Mechanical Fuel Systems). • INSTALL LUCAS FUEL INJECTION PUMP in Group 090 of CTM207 (Mechanical Fuel Systems). • INSTALL DENSO FUEL INJECTION PUMP in Group 090 of CTM207 (Mechanical Fuel Systems). • INSTALL MOTORPAL FUEL INJECTION PUMP in Group 090 of CTM207 (Mechanical Fuel Systems). • INSTALL BOSCH VP44 FUEL INJECTION PUMP in Group 090 of CTM170 (Level 4 Electronic Fuel Systems with Bosch VP44 Pump). • INSTALL INJECTION PUMP in Group 090 of CTM331 (Level 12 Electronic Fuel Systems with Stanadyne DE10 Pump). • INSTALL FUEL INJECTION PUMP in Group 090 of CTM284 (Level 1 Electronic Fuel System with Delphi DP201 Pump). • REMOVE AND INSTALL HIGH PRESSURE FUEL PUMP in Group 090 of CTM220 (Level 11 Electronic Fuel Systems with Denso High Pressure Common Rail). • REMOVE AND INSTALL HIGH PRESSURE COMMON RAIL in Group 090 of CTM220 (Level 11 Electronic Fuel Systems with Denso High Pressure Common Rail). • REMOVE AND INSTALL HIGH PRESSURE COMMON RAIL in Group 090 of CTM320 (Level 14 Electronic Fuel Systems with Denso High Pressure Common Rail).
Install camshaft and timing gears. Time all gears with No. 1 cylinder at TDC compression stroke.	See INSTALL CAMSHAFT in Group 050.
Install timing gear cover. Install new front seal.	See INSTALL TIMING GEAR COVER in Group 050. See REPLACE FRONT CRANKSHAFT OIL SEAL AND WEAR SLEEVE in Group 040.
Install oil pressure regulating valve assembly and cap (early engines).	See REMOVE AND INSTALL OIL PRESSURE REGULATING VALVE in Group 060.
Install oil pan.	See INSTALL OIL PAN in Group 060.
Install camshaft followers in same order as removed.	See INSPECT, MEASURE, AND ASSEMBLE CAMSHAFT FOLLOWERS in Group 020 or 021.
Install cylinder head gasket and cylinder head. Install push rods and rocker arm assembly.	See INSTALL CYLINDER HEAD in Group 020 or 021. See INSTALL ROCKER ARM ASSEMBLY in Group 020 or 021.
Install starter motor.	See REMOVE AND INSTALL STARTER in Group 100.

Continued on next page

RG,04,DT7335 –19–15MAY02–3/5

ENGINE ASSEMBLY SEQUENCE	
Procedure	**Reference**
Install injection nozzles.	See appropriate procedure: • INSTALL FUEL INJECTION NOZZLES in Group 090 of CTM207 (Mechanical Fuel Systems). • INSTALL FUEL INJECTION NOZZLES in Group 090 of CTM170 (Level 4 Electronic Fuel Systems with Bosch VP44 Pump). • INSTALL FUEL INJECTION NOZZLES in Group 090 of CTM331 (Level 12 Electronic Fuel Systems with Stanadyne DE10 Pump). • ASSEMBLE FUEL INJECTION NOZZLES in Group 090 of CTM284 (Level 1 Electronic Fuel System with Delphi DP201 Pump). • INSTALL ELECTRONIC INJECTORS in Group 090 of CTM220 (Level 11 Electronic Fuel Systems with Denso High Pressure Common Rail).
Install fuel filter assembly.	See appropriate procedure: • REMOVE AND INSTALL FINAL FUEL FILTER AND/OR PRIMARY FUEL FILTER/WATER SEPARATOR BASE in Group 090 of CTM207 (Mechanical Fuel Systems). • REMOVE AND INSTALL FINAL FUEL FILTER/WATER SEPARATOR BASE in Group 090 of CTM170 (Level 4 Electronic Fuel Systems with Bosch VP44 Pump). • REMOVE AND INSTALL FINAL FUEL FILTER/WATER BOWL AND/OR PRE-FILTER/WATER BOWL BASE in Group 090 of CTM331 (Level 12 Electronic Fuel Systems with Stanadyne DE10 Pump). • REMOVE AND INSTALL FINAL FUEL FILTER/WATER BOWL AND/OR PRE-FILTER/WATER BOWL BASE in Group 090 of CTM284 (Level 1 Electronic Fuel System with Delphi DP201 Pump). • REMOVE AND INSTALL PRE-FILTER/WATER BOWL BASE in Group 090 of CTM220 (Level 11 Electronic Fuel Systems with Denso High Pressure Common Rail). • REMOVE AND INSTALL FINAL FUEL FILTER/WATER BOWL BASE in Group 090 of CTM220 (Level 11 Electronic Fuel Systems with Denso High Pressure Common Rail).
Install fuel supply pump and fuel lines.	See appropriate procedure: • INSTALL LUCAS AND STANADYNE FUEL SUPPLY PUMP in Group 090 of CTM207 (Mechanical Fuel Systems). • INSTALL DENSO IN-LINE FUEL SUPPLY PUMP in Group 090 of CTM207 (Mechanical Fuel Systems). • INSTALL MOTORPAL FUEL SUPPLY PUMP in Group 090 of CTM207 (Mechanical Fuel Systems). • REMOVE FUEL SUPPLY PUMP in Group 090 of CTM331 (Level 12 Electronic Fuel Systems with Stanadyne DE10 Pump). • REMOVE MECHANICAL FUEL TRANSFER PUMP in Group 090 of CTM220 (Level 11 Electronic Fuel Systems with Denso High Pressure Common Rail).
Install oil cooler, new oil filter, and dipstick.	See REMOVE, INSPECT, AND INSTALL OIL COOLER in Group 060.
Install coolant manifold or thermostat housing and thermostats.	See COOLING SYSTEM in Group 070.

Continued on next page

RG,04,DT7335 –19–15MAY02–4/5

ENGINE ASSEMBLY SEQUENCE	
Procedure	**Reference**
Install exhaust manifold. Install turbocharger. Prelube the turbocharger. Install EGR cooler and coolant lines. Install intake manifold. Install EGR exhaust tube. Install EGR valve.	See REMOVE, INSPECT AND INSTALL EXHAUST MANIFOLD in Group 080. See INSTALL TURBOCHARGER in Group 080. See INSTALL EGR COOLERin Group 080
Install coolant pump and hoses.	See INSTALL COOLANT PUMP in Group 070.
Install crankshaft pulley or vibration damper. Use new damper.	See INSTALL PULLEY OR VIBRATION DAMPER AND PULLEY in Group 040.
Install alternator.	See REMOVE AND INSTALL ALTERNATOR in Group 100.
Install belt tensioner, fan, and fan belts.	See REMOVE AND INSTALL AUTOMATIC (SPRING) BELT TENSIONER in Group 070.
Adjust valves. Install rocker arm cover and vent tube.	See CHECK AND ADJUST VALVE CLEARANCE in Group 020 or 021. See INSTALL ROCKER ARM COVER in Group 020 or 021.
Fill engine with clean oil.	Section 01, Group 002
Flush cooling system and refill with proper coolant.	Section 01, Group 002
Perform engine break-in and standard performance checks.	See PERFORM ENGINE BREAK-IN in this group.

RG,04,DT7335 –19–15MAY02–5/5

Engine Break-In Guidelines

Engine break-in should be performed after overhaul or when the following repairs have been made:

- Main bearings, rod bearings, crankshaft, or any combination of these parts have been replaced.
- Pistons, rings, or liners have been replaced.
- Rear crankshaft oil seal and wear sleeve have been replaced. (Primary objective is to see if oil seal still leaks.)
- Cylinder head has been removed.
- Injection pump has been removed or critical adjustments have been made while it is on the engine. (Primary objective is to check power.)

RG,RG34710,1053 –19–03NOV99–1/1

Perform Engine Break-In

IMPORTANT: If engine has a PTO, break-in can be performed at the PTO if it is done as specified below. To prevent possible damage to the PTO gearbox, DO NOT apply full load through the PTO for any longer than the specified 10 minutes below.

Use a dynamometer to perform the following preliminary break-in procedure. If necessary, preliminary engine break-in can be performed without a dynamometer if under controlled operating conditions.

IMPORTANT: USE ONLY John Deere Engine Break-In Oil or equivalent. DO NOT use John Deere PLUS-50 oil or engine oils meeting API CI-4, API CH-4, API CG-4, API CF-4, API CF-2, API CF, ACEA E5, ACEA E4 or ACEA E3 performance levels during break-in period of an engine that has had a major overhaul. These oils will not allow an overhauled engine to properly wear during the break-in period.

Do not add makeup oil until the oil level is BELOW the add mark. John Deere Engine Break-In Oil should be used to make up any oil consumed during break-in period.

DO NOT fill above the crosshatch pattern or FULL mark. Oil levels anywhere within the crosshatch are acceptable.

1. Fill engine crankcase to proper level with John Deere Engine Break-In Oil during break-in operation. Use break-in oil regardless of ambient temperature. This oil is specifically formulated to enhance break-in of John Deere diesel engines. Under normal conditions, do not exceed 100 hours with break-in oil.

   If John Deere Engine Break-In Oil is not available, use diesel engine oil meeting API Service Classification CC, CD or CE or ACEA Specification E1 or E2.

IMPORTANT: During preliminary break-in, periodically check engine oil pressure and coolant temperature. Also check for signs of fuel, oil, or coolant leaks.

Do not run engine at full load for more than 10 minutes at one time.

2. Start engine. Run at loads and speeds shown in following chart for time limits given.

PRELIMINARY ENGINE BREAK-IN AFTER MAJOR OVERHAUL

Time	Load	Engine Speed
1 minute	No load	850 rpm
2 minutes	No load	Fast Idle
10 minutes	1/2—3/4 load	2000 rpm to rated speed
10 minutes	Full load	Rated speed

3. After preliminary break-in, run engine 1—2 minutes at 1500 rpm, with no load before shut-down.

4. Check and readjust valve clearance as necessary. Cylinder head retorque is not required.

NOTE: During the first 20 hours, avoid prolonged periods of engine idling or sustained maximum load operation. If engine will idle longer than 5 minutes, stop engine.

5. Operate the engine at heavy loads with minimal idling during the break-in period.

If the engine has significant operating time at idle, constant speeds, and/or light load usage, an additional 100 hour break-in period is recommended, using a new change of John Deere Engine Break-In Oil and new John Deere oil filter.

Continued on next page

Check engine oil level more frequently during engine break-in period. As a general rule, makeup oil should not need to be added during 100-hour break-in period. However, if makeup oil is required in the first 100-hour break-in, an additional 100-hour break-in period is required. Use a new change of John Deere Engine Break-In Oil and a new John Deere oil filter.

After 100 hours maximum, drain break-in oil and change oil filter. Fill crankcase with John Deere PLUS-50® or TORQ-GARD SUPREME® or other heavy-duty diesel engine oil within the same service classification as recommended in this manual. See DIESEL ENGINE OIL—NON-CERTIFIED AND TIER 1 CERTIFIED ENGINES or DIESEL ENGINE OIL—TIER 2 ENGINES in Section 01, Group 002, Fuels, Lubricants, and Coolants.

NOTE: Some increase in oil consumption may be expected when low viscosity oils are used. Check oil levels more frequently.

If air temperature is below —10°C (14°F), use an engine block heater.

PLUS-50 is a registered trademark of Deere & Company.
TORQ-GARD SUPREME is a registered trademark of Deere & Company.

RG,100,JW7645 –19–03JUN04–2/2

General Information

NOTE: Engines with four-valve head design are covered in Group 021.

OUO1089,0000236 –19–12JUN02–1/1

Check and Adjust Valve Clearance

CAUTION: To prevent accidental starting of engine while performing valve adjustments, always disconnect NEGATIVE (—) battery terminal.

IMPORTANT: Valve clearance MUST BE checked and adjusted with engine COLD.

1. Remove rocker arm cover and crankcase ventilator tube.

IMPORTANT: Visually inspect contact surfaces of valve tips and rocker arm wear pads. Check all parts for excessive wear, breakage, or cracks. Replace parts that show visible damage.

Rocker arms that exhibit excessive valve clearance should be inspected more thoroughly to identify damaged parts.

2. Remove plastic plugs or cover plate from engine timing/rotation hole (A) and timing pin hole (B).

NOTE: Some engines are equipped with flywheel housings which do not allow use of an engine flywheel rotation tool. These engines with straight nose crankshafts may be rotated from front nose of engine, using JDG966 Crankshaft Front/Rear Rotation Adapter.

3. Using JDE83 or JDE81-1[1] Flywheel Turning Tool, rotate engine flywheel in running direction (clockwise viewed from front) until No. 1 cylinder is at TDC compression stroke. Insert JDG1571 or JDE81-4 Timing Pin in flywheel.

   If No. 1 cylinder rocker arms are loose, the engine is at No. 1 TDC compression.

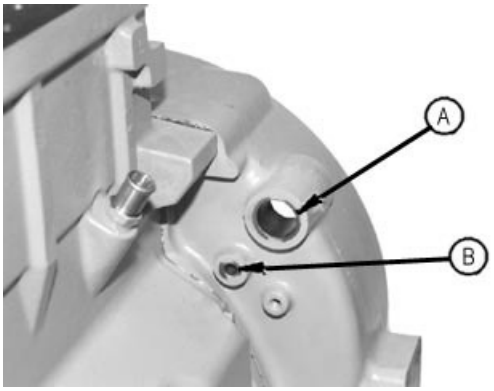

RG7408 –UN–06AUG96

Flywheel Housing Timing Holes

A—Timing/Rotation Hole
B—Timing Pin Hole

[1]JDG820 (formerly JDE81-1) Flywheel Turning Tool may be used if JDE81-1 is not available, JDG820 (formerly JDE81-1) Flywheel Turning Tool MUST be used for 6.8L engines in 7400 and 7600 Tractors.

Continued on next page

RG,05,DT7375 –19–07NOV03–1/5

If No. 1 cylinder rocker arms are not loose, rotate engine one full revolution (360°) to No. 1 TDC compression.

RG,05,DT7375 –19–07NOV03–2/5

4. With engine lock-pinned at TDC of No. 1 piston's compression stroke, check valve clearance to following specifications. (Use sequence for 4-cylinder or 6-cylinder engines as outlined on next page.)

   If valves need adjusting, loosen the jam nut (A) on rocker arm adjusting screw. Turn adjusting screw until feeler gauge slips with a slight drag. Hold the adjusting screw from turning with screwdriver and tighten jam nut to specifications. Recheck clearance again after tightening jam nut. Readjust clearance as necessary.

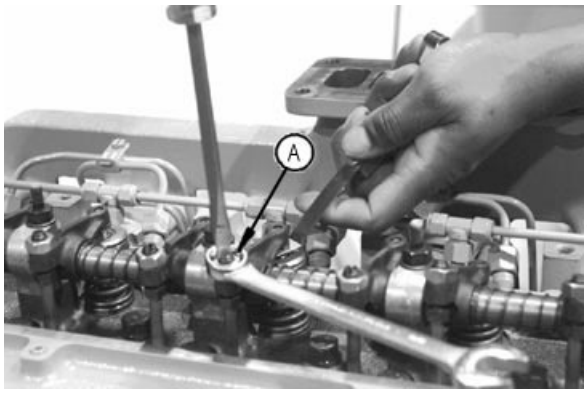

Adjusting Valves

A—Adjusting Screw Jam Nut

Specification	
Intake Valve Clearance (Rocker Arm-to-Valve Tip) (Engine Cold)—Clearance	0.36 mm (0.014 in.)
Exhaust Valve Clearance (Rocker Arm-to-Valve Tip) (Engine Cold)—Clearance	0.46 mm (0.018 in.)

Specification	
Rocker Arm Adjusting Screw Jam Nut—Torque	27 N•m (20 lb-ft)

5. Install rocker arm cover and crankcase ventilator tube.

Continued on next page

RG,05,DT7375 –19–07NOV03–3/5

4-Cylinder Engine:

NOTE: Firing order is 1-3-4-2.

1. Using JDG1571 or JDE81-4 Timing Pin, lock No. 1 piston at TDC compression stroke (B).
2. Adjust valve clearance on No. 1 and 3 exhaust valves and No. 1 and 2 intake valves.
3. Turn crankshaft 360°. Lock No. 4 piston at TDC compression stroke (C).
4. Adjust valve clearance on No. 2 and 4 exhaust valves and No. 3 and 4 intake valves.

A—Front of Engine
B—No. 1 Piston TDC Compression
C—No. 4 Piston TDC Compression
E—Exhaust Valve
I—Intake Valve

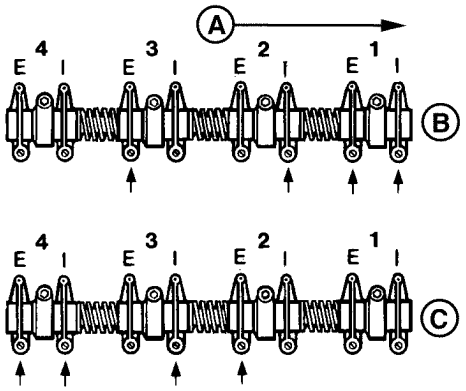

RG4776 –UN–31OCT97

4-Cylinder Engine Valve Adjustment

RG,05,DT7375 –19–07NOV03–4/5

6-Cylinder Engine:

NOTE: Firing order is 1-5-3-6-2-4.

1. Lock No. 1 piston at TDC compression stroke (B).
2. Adjust valve clearance on No. 1, 3 and 5 exhaust valves and No. 1, 2, and 4 intake valves.
3. Turn crankshaft 360°. Lock No. 6 piston at TDC compression stroke (C).
4. Adjust valve clearance on No. 2, 4 and 6 exhaust valves and No. 3, 5, and 6 intake valves.

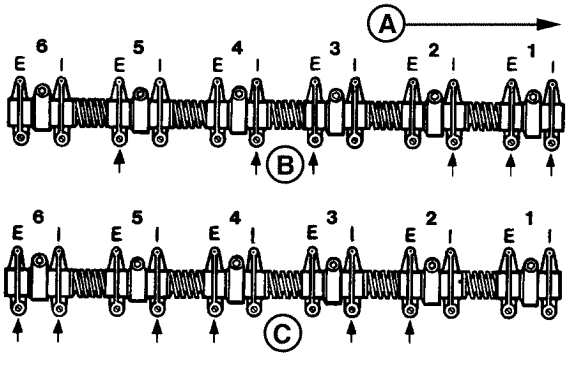

RG4777 –UN–31OCT97

6-Cylinder Engine Valve Adjustment

A—Front of Engine
B—No. 1 Piston TDC Compression
C—No. 6 Piston TDC Compression
E—Exhaust Valve
I—Intake Valve

RG,05,DT7375 –19–07NOV03–5/5

Measure Valve Lift

IMPORTANT: For a more accurate measurement, measure valve lift at 0.00 mm (0.00 in.) rocker arm-to-valve tip clearance and with engine COLD.

NOTE: Measuring valve lift provides an indication of wear on camshaft lobes and camshaft followers or push rods.

1. Remove rocker arm cover.
2. Set No. 1 piston at TDC compression stroke and install JDG1571 or JDE81-4 Timing Pin in flywheel.
3. Set rocker arm-to-valve tip clearance to 0.00 mm (0.00 in.) for:
   - No. 1 and 3 exhaust and No. 1 and 2 intake valves on 4-cylinder engines.
   - No. 1, 3, and 5 exhaust and No. 1, 2, and 4 intake valves on 6-cylinder engines.
4. Place dial indicator tip on top of valve spring cap (retainer) or rotator. Preload indicator tip and set dial at 0.0 mm (0.0 in.).
5. Remove timing pin from flywheel and manually rotate engine one full revolution (360°) in running direction using appropriate flywheel turning tool.
6. Observe dial indicator reading as valve is moved to full open. Record maximum reading and compare with specifications given below.

Specification	
Intake Valves—Lift	11.77—12.21 mm (0.463—0.481 in.)
Wear Limit	11.34 mm (0.447 in.)
Exhaust Valves—Lift	11.51—11.94 mm (0.453—0.470 in.)
Wear Limit	11.08 mm (0.436 in.)

7. Follow same procedure for all remaining valves and record readings.

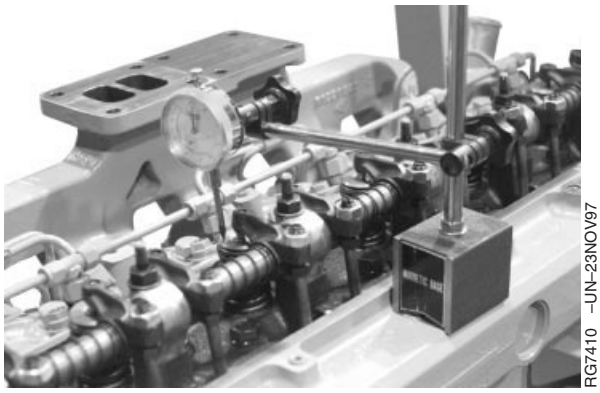

RG7410 –UN–23NOV97

Measuring Valve Lift

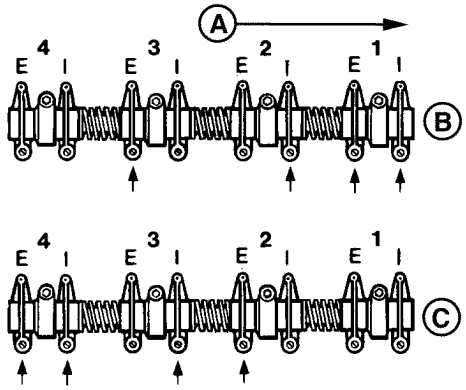

RG4776 –UN–31OCT97

4-Cylinder Engine

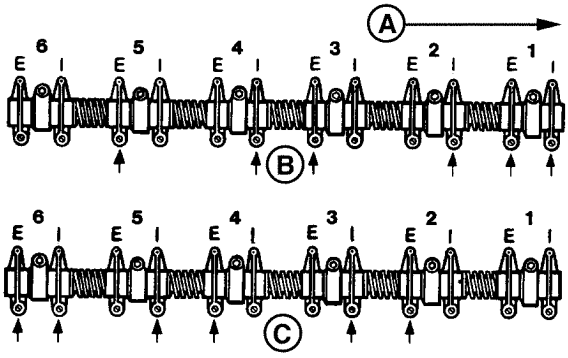

RG4777 –UN–31OCT97

6-Cylinder Engine

A—Front of Engine
B—No. 1 Piston TDC Compression
C—No. 4 Piston or No. 6 Piston TDC Compression
E—Exhaust Valve
I—Intake Valve

Continued on next page

If valve lift on all valves is within specifications, adjust valve lash to specified clearance. (See CHECK AND ADJUST VALVE CLEARANCE earlier in this group.)

If valve lift on one or more valves is not within specification, remove and inspect entire valve train and camshaft.

8. Rotate engine one full revolution (360°). Lock engine at:

   - TDC No. 4 compression stroke for 4-cylinder engines.
   - TDC No. 6 compression stroke for 6-cylinder engines.

9. Set rocker arm-to-valve tip clearance to 0.0 mm (0.0 in.) for:

   - No. 2 and 4 exhaust and No. 3 and 4 intake valves on 4-cylinder engines.
   - No. 2, 4, and 6 exhaust and No. 3, 5, and 6 intake valves on 6-cylinder engines.

10. Repeat steps 4—7.

RG,05,DT7374 –19–11NOV97–2/2

Remove Cylinder Head

In some applications, it may be necessary to remove engine from machine to service cylinder head. Refer to your Machine Technical Manual for engine removal procedure.

CAUTION: After operating engine, allow exhaust system to cool before working on engine.

Do NOT drain coolant until the coolant temperature is below operating temperature. Remove radiator filler cap only when the cap is cool enough to touch with bare hands. Slowly loosen cap to first stop to relieve pressure before removing completely.

1. Drain engine oil and coolant.

NOTE: On engines equipped with a low-profile turbocharger, remove turbocharger before attaching engine to repair stand.

2. Remove air inlet elbow. (See REMOVE AND INSTALL AIR INTAKE PIPE in Group 080.)

Continued on next page

RG,05,DT7373 –19–07NOV03–1/12

NOTE: Turbocharger may be removed from engine while assembled to exhaust manifold, if desired.

3. On turbocharged engines, disconnect turbocharger oil inlet and oil drain lines (A) at turbocharger (B). Remove turbocharger and exhaust elbow (shown removed). (See REMOVE TURBOCHARGER in Group 080.)

IMPORTANT: Replace rocker arm cover sealing ring (D) every time the rocker arm cover is removed during engine or cylinder head overhaul.

4. Remove hex nuts and O-rings from rocker arm cover (C).

   Lift off cover. Save O-rings for reassembly or replace as necessary.

A—Turbocharger Oil Inlet and Oil Drain Lines
B—Turbocharger
C—Rocker Arm Cover
D—Rocker Arm Cover Sealing Ring

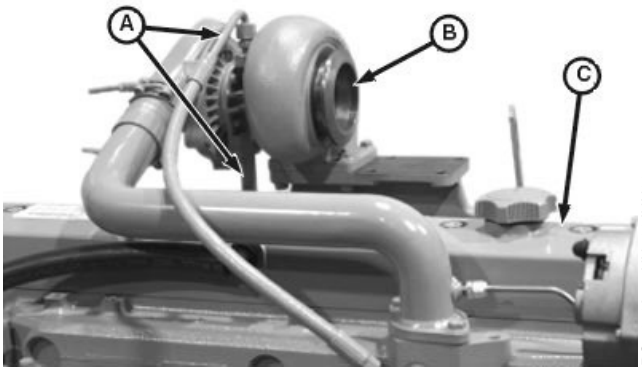

Turbocharger and Rocker Arm Cover



Rocker Arm Cover Sealing Ring

RG,05,DT7373 –19–07NOV03–2/12

5. Using guide studs, remove exhaust manifold (E).

NOTE: On some engines, the thermostat housing/coolant manifold (F) is part of the cylinder head.

6. Remove thermostat housing/coolant manifold (F).

E—Exhaust Manifold
F—Thermostat Housing/Coolant Manifold

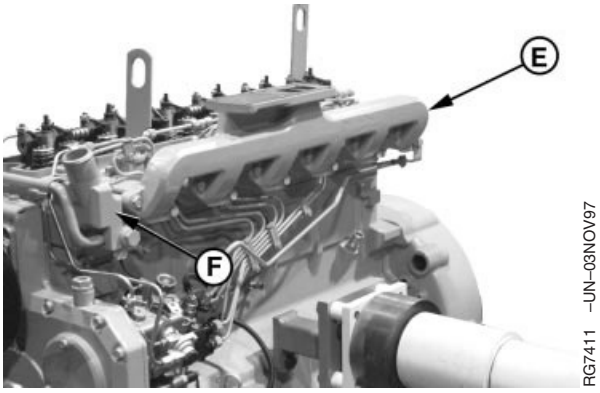

Thermostat Housing, Exhaust and Coolant Manifold

Continued on next page

RG,05,DT7373 –19–07NOV03–3/12

NOTE: Position of fuel filters (A) and (B) and supply pump (C) vary by engine and injection pump applications. See Section 02, Group 090 of CTM207—Mechanical Fuel Systems, CTM170—Level 4 Electronic Fuel Systems with Bosch VP44 Pump, CTM331—Level 12 Electronic Fuel Systems with Stanadyne DE10 Pump, or CTM284—Level 1 Electronic Fuel Systems with Delphi/Lucas DP201 Pump for procedures to remove filter(s) and/or supply pump as required.

7. Disconnect fuel lines and remove fuel filter(s) (A) and (B) and mounting brackets as required.

8. Remove fuel supply pump (C), if equipped. Inspect face of pump lever for wear. If worn flat or concave, replace supply pump.

9. Remove alternator, if desired. (See REMOVE AND INSTALL ALTERNATOR in Group 100.)

A—Final Fuel Filter
B—Primary Fuel Filter/Water Separator
C—Fuel Supply Pump



RG7745A –UN–07NOV97

Fuel Filters

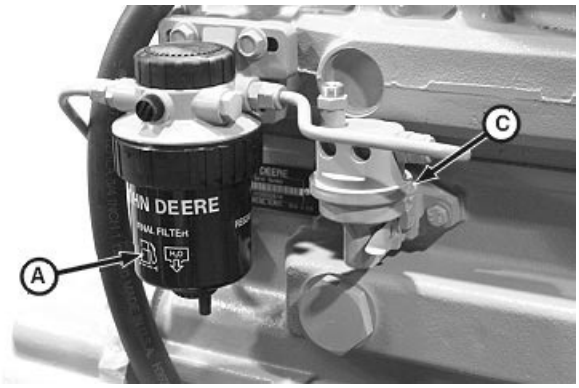

RG10379 –UN–19OCT99

Fuel Filter and Supply Pump

RG,05,DT7373 –19–07NOV03–4/12

10. Remove thermostat housing-to-coolant pump tube (D).

D—Thermostat Housing-to-Coolant Pump Tube

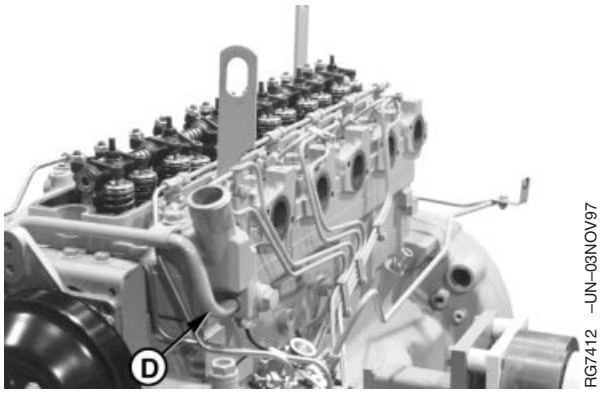

RG7412 –UN–03NOV97

Thermostat Housing-to-Coolant Pump Tube

Continued on next page

RG,05,DT7373 –19–07NOV03–5/12

11. Remove fuel leakoff line (A) and fuel delivery lines (B) as an assembly. Remove fuel injection nozzles (C). See appropriate procedure:

    - REMOVE FUEL INJECTION NOZZLES in Section 02, Group 090 of CTM207—Mechanical Fuel Systems.
    - REMOVE FUEL INJECTION NOZZLES in Section 02, Group 090 of CTM170—Level 4 Electronic Fuel Systems with Bosch VP44 Pump.
    - REMOVE FUEL INJECTION NOZZLES in Section 02, Group 090 of CTM331—Level 12 Electronic Fuel Systems with Stanadyne DE10 Pump.
    - REMOVE FUEL INJECTION NOZZLES in Section 02, Group 090 of CTM284—Level 1 Electronic Fuel Systems with Delphi/Lucas DP201 Pump.

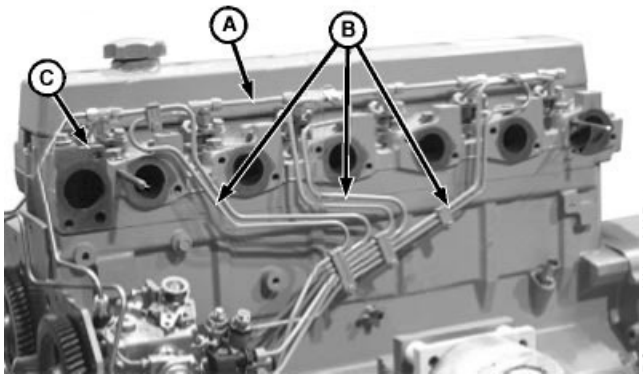

RG9095 –UN–27MAR98

Fuel Lines and Injection Nozzles

A—Fuel Leakoff Line
B—Fuel Delivery Lines
C—Injection Nozzles

RG,05,DT7373 –19–07NOV03–6/12

NOTE: Loosen all rocker arm adjusting screws prior to removing assembly.

12. Remove rocker arm assembly.

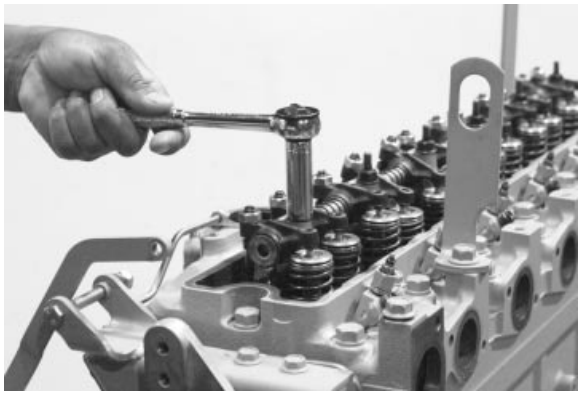

RG7413 –UN–23NOV97

Rocker Arm Assembly

Continued on next page

RG,05,DT7373 –19–07NOV03–7/12

13. Disconnect coolant temperature connector (A) from injection pump wiring harness.

A—Coolant Temperature Connector

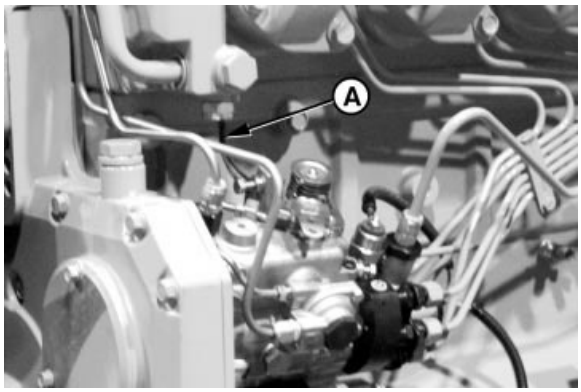

Coolant Temperature Connector

RG,05,DT7373 –19–07NOV03–8/12

14. Remove all push rods and identify for reassembly in the same location. Clean and inspect push rods.

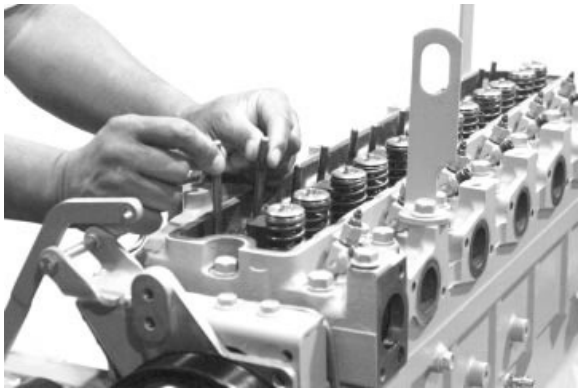

Valve Push Rods

Continued on next page

RG,05,DT7373 –19–07NOV03–9/12

15. If a cylinder head gasket failure has occurred, check and record torque on each cylinder head cap screw before removing.

    To check cylinder head cap screw torque:

    a. Make a reference mark (in-line) on socket (A) and cylinder head surface (B).

    b. Loosen cap screw at least 1/2 turn.

    c. Retighten cap screw (using a torque wrench) until reference marks align and record torque.

16. Remove all cylinder head cap screws and discard. Do not reuse cylinder head cap screws.

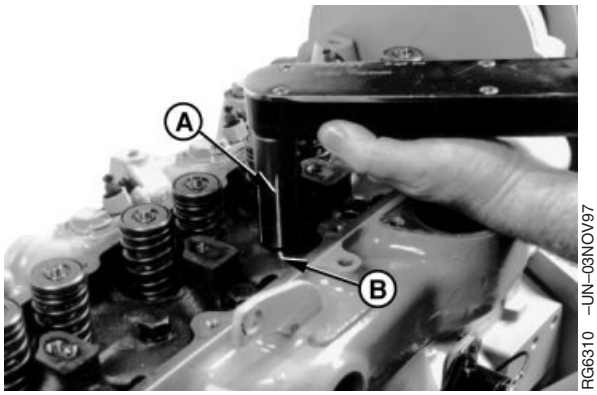

Cylinder Head Cap Screws

A—Mark on Socket
B—Mark on Head Surface

RG,05,DT7373 –19–07NOV03–10/12

IMPORTANT: DO NOT use screwdrivers or pry bars between cylinder block and head to loosen head gasket seal. Screwdrivers or pry bars can damage cylinder head and block gasket surfaces.

17. Lift cylinder head (A) from block using JDG23 Engine Lifting Sling, or heavy-duty chains, and a hoist. If cylinder head sticks, use a soft hammer to tap cylinder head.

A—Cylinder Head

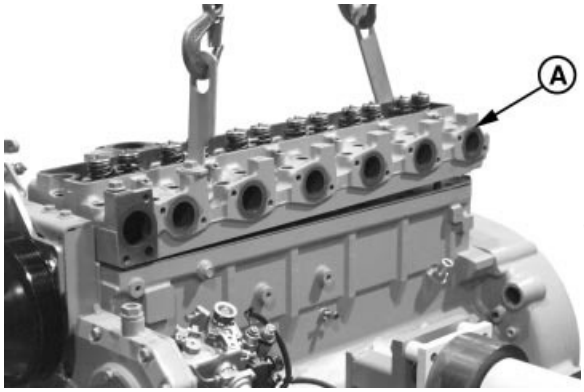

Cylinder Head

Continued on next page

RG,05,DT7373 –19–07NOV03–11/12

18. Remove cylinder head gasket (B). Inspect for possible oil, coolant, or combustion chamber leaks. Also, check for evidence of incorrect head gasket being used.

NOTE: Do not rotate crankshaft with cylinder head removed unless cylinder liners are secured with cap screws and large flat washers. (See CHECK CYLINDER LINER STANDOUT (HEIGHT ABOVE BLOCK), later in this group.)

B—Head Gasket

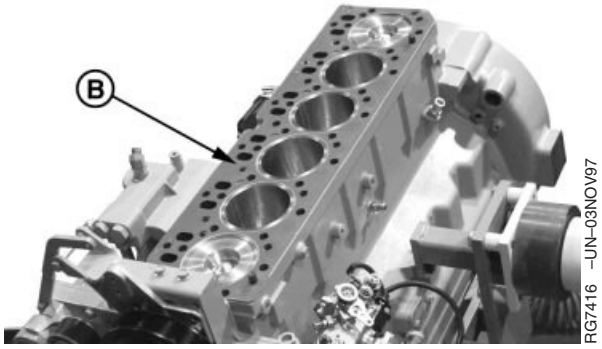

Cylinder Head Gasket

RG,05,DT7373 –19–07NOV03–12/12

Disassemble and Inspect Rocker Arm Shaft Assembly

NOTE: Note location of parts as rocker arms are disassembled, to aid in assembly.

1. Remove plugs (A) and bowed washers (B) from rocker arm shaft.

2. Disassemble and inspect all parts for wear or damage. Replace any parts that are damaged or not within specifications.

Rocker Arm Assembly—Specification

46 mm (1.81 in.) Compressed Height—Spring Tension	18—27 N (4—6 lb-force)
Spring—Compressed Height	46 mm @ 18—27 N (1.81 in. @ 4—6 lb-force)
Shaft—OD	19.99—20.02 mm (0.787—0.788 in.)
Wear Limit	19.94 mm (0.785 in.)
Shaft Support—Maximum ID	20.17 mm (0.794 in.)
Bore—ID	20.07—20.12 mm (0.790—0.792 in.)
Wear Limit	20.17 mm (0.794 in.)

A—Plug
B—Washer

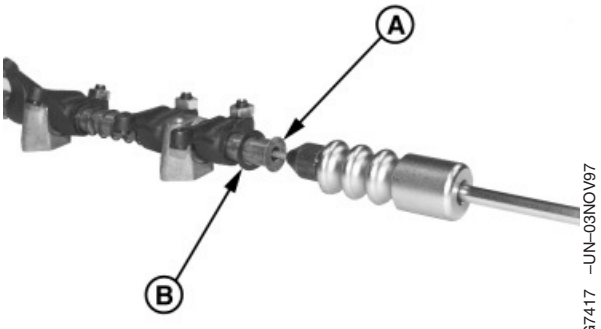

RG7417 –UN–03NOV97

Rocker Arm Shaft



RG7418 –UN–23NOV97

Rocker Arm Shaft OD



RG7419 –UN–23NOV97

Rocker Shaft Support ID



RG7420 –UN–23NOV97

Rocker Arm Bore ID

RG,05,DT7372 –19–11NOV97–1/1

Assemble Rocker Arm Assembly

1. Lubricate shaft OD, rocker arm bores, and rocker arm supports with clean engine oil.

IMPORTANT: The oil supply hole (B) on the rocker arm shaft must be toward the flywheel end of the engine.

2. Assemble springs, rocker arms, and rocker arm supports onto shaft in the same location as removed from.

NOTE: Install bowed washers with cupped side facing away from the plug.

3. Install bowed washers and new end plugs (A) firmly in end of shaft.

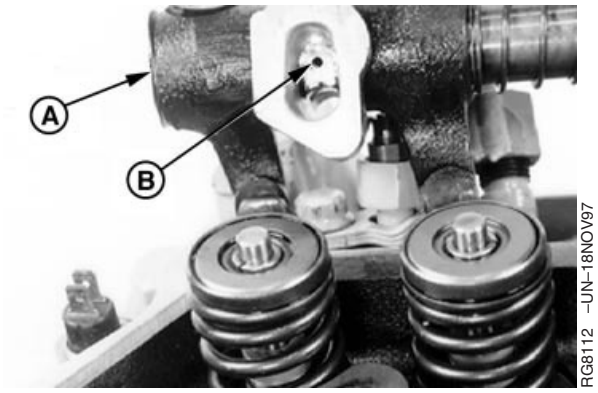

Rocker Arm Oil Supply Hole and Plugs

A—End Plugs
B—Oil Supply Hole

RG,05,DT7371 –19–11NOV97–1/1

Inspect, Measure, and Install Fuel Supply Pump Push Rod (If Applicable)

1. Remove and clean push rod (A). Label end(s) for reassembly in same orientation.

A—Push Rod



Fuel Supply Pump Push Rod

Continued on next page

RG,05,DT7370 –19–11NOV97–1/4

2. Measure push rod OD (B). If OD is less than specification, install a new push rod.

Specification

Fuel Supply Pump Push Rod—
OD ..... 9.891—9.917 mm
(0.3894—0.3904 in.)

B—Push Rod OD

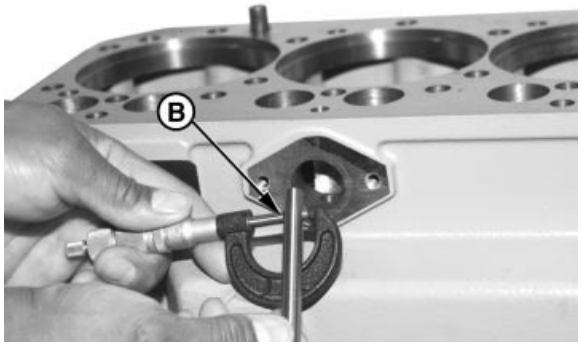

RG7496A –UN–04NOV97

Push Rod OD Wear

RG,05,DT7370 –19–11NOV97–2/4

3. Check crown on push rod ends. If flat or concave, replace push rod and check camshaft lobe for wear. (See MEASURE CAMSHAFT LOBE HEIGHT in Group 050.)

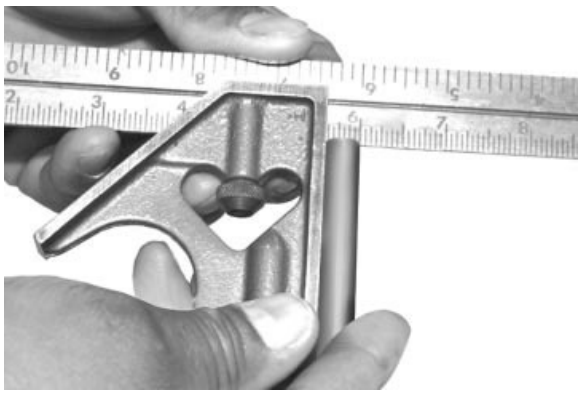

RG8113 –UN–23NOV97

Push Rod and Crown Wear

Continued on next page

RG,05,DT7370 –19–11NOV97–3/4

4. Measure push rod bore ID (C) in block.

Specification

Fuel Supply Pump Push Rod
Bore in Block—ID ..... 10.00—10.05 mm
(0.3937—0.3957 in.)

Repair or replace block as necessary.

5. Lubricate push rod with clean engine oil. Apply a small amount of TY6333 High Temperature Grease to both ends of the rod and install in bore with same end orientation as removed.

C—Bore ID

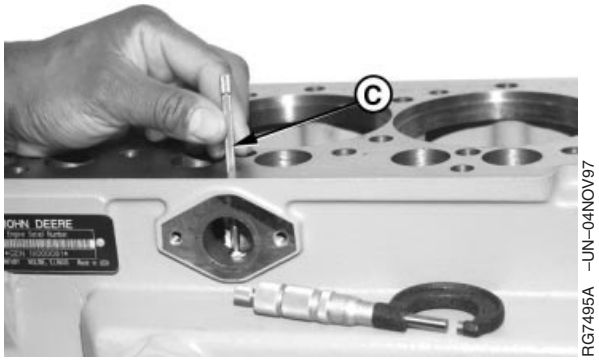

RG7495A –UN–04NOV97

Push Rod Bore in Block Wear

RG,05,DT7370 –19–11NOV97–4/4

Inspect, Measure, and Assemble Camshaft Followers

1. Remove and clean camshaft followers. Label for reassembly in same location.



RG7421 –UN–23NOV97

Camshaft Followers

Continued on next page

RG,05,DT7369 –19–11NOV97–1/3

2. Measure camshaft follower OD. If camshaft follower OD is less than specified, install a new follower.

Specification

Camshaft Follower—OD..... 31.61—31.64 mm (1.245—1.246 in.)



RG7422 –UN–23NOV97

Camshaft Follower Wear

RG,05,DT7369 –19–11NOV97–2/3

3. Check crown on follower face. If flat or concave, replace follower and check camshaft lobes for wear. (See VISUALLY INSPECT CAMSHAFT in Group 050.)

4. Measure camshaft follower bore in block and determine if clearance is within specification. (See MEASURE CAMSHAFT FOLLOWER MACHINED BORE IN BLOCK in Group 030.)

5. Lubricate camshaft followers in clean engine oil and install in same bore from which removed.

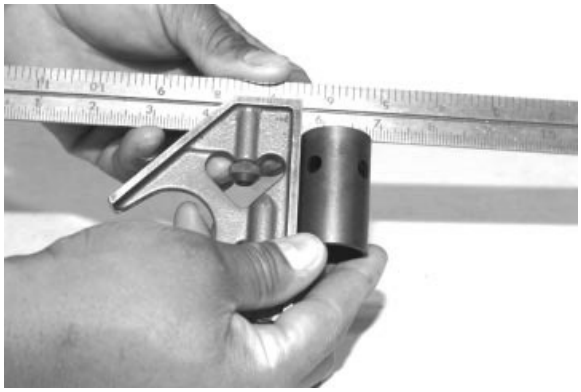

RG7423 –UN–23NOV97

Camshaft Follower and Crown Wear

RG,05,DT7369 –19–11NOV97–3/3

Measure Valve Recess in Cylinder Head

Measure and record valve recess (A) using a depth micrometer, magnetic base dial indicator or a dial indicator with JDG451 Height Gauge (B). Measurements must be made a maximum of 3.0 mm (0.12 in.) in from edge of valve head.

Specification

Intake Valves—Recess in Cylinder Head	0.61—1.11 mm (0.024—0.044 in.)
Wear Limit	1.63 mm (0.064 in.)
Exhaust Valve—Recess in Cylinder Head	1.22—1.72 mm (0.048—0.068 in.)
Wear Limit	2.26 mm (0.089 in.)

Install new valves and inserts, or grind existing valves and inserts, as necessary, to obtain proper valve recess. Grind valve seat inserts as required. (See REMOVE VALVE SEAT INSERTS later in this group.)

A—Valve Recess
B—Dial Indicator

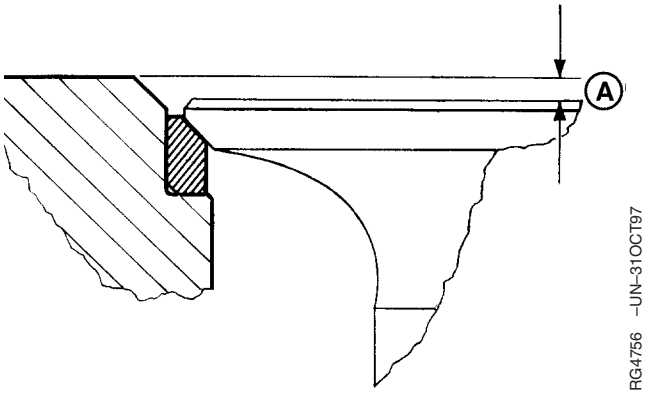

Valve Recess Measurement

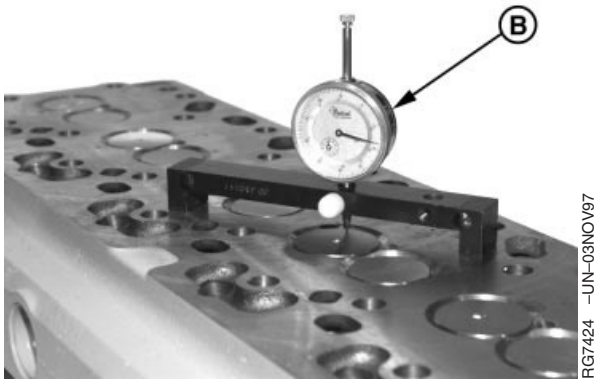

Valve Recess Measurement

RG,05,DT7368 –19–03FEB04–1/1

Preliminary Cylinder Head and Valve Checks

Make preliminary inspection of cylinder head and valve assembly during disassembly.

Look for the following conditions:

Sticking Valves:

- Carbon deposits on valve stem.
- Worn valve guides.
- Scored valve stems.
- Warped valve stems.
- Misaligned or broken valve springs.
- Worn or distorted valve seats.
- Insufficient lubrication.

Warped, Worn, or Distorted Valve Guides:

- Lack of lubrication.
- Cylinder head distortion.
- Excessive heat.
- Unevenly tightened cylinder head cap screws.

Distorted Cylinder Head and Gasket Leakage:

- Loss of cylinder head cap screw torque.
- Broken cylinder head cap screw(s).
- Overheating from low coolant level operation.
- Insufficient liner standout.
- Coolant leakage into cylinder causing hydraulic failure of gasket.
- Leaking aftercooler.
- Cracked cylinder head.
- Cracked cylinder liner.
- Damaged or incorrect gasket.
- Overpowering or overfueling.
- Damaged cylinder head or block surfaces.
- Improper surface finish on cylinder head.
- Improperly tightened cylinder head cap screws.
- Faulty gasket installation (misaligned).

Worn or Broken Valve Seats:

- Misaligned valves.
- Distorted cylinder head.
- Carbon deposits on seats due to incomplete combustion.
- Valve spring tension too weak.
- Excessive heat.
- Improper valve clearance.
- Improper valve timing.
- Incorrect valve or seat installed.

Burned, Pitted, Worn, or Broken Valves:

- Worn or distorted valve seats.
- Loose valve seats.
- Worn valve guides.
- Insufficient cooling.
- Cocked or broken valve springs.
- Improper engine operation.
- Improper valve train timing.
- Faulty valve rotators.
- Warped or distorted valve stems.
- “Stretched” valves due to excessive spring tension.
- Warped cylinder head.
- Bent push rods.
- Carbon build-up on valve seats.
- Rocker arm failure.
- Incorrect valve or seat installed.
- Incorrect piston-to-valve clearance.

Improper Valve Clearance:

- Inefficient use of fuel.
- Engine starts harder.
- Maximum engine power will not be achieved.
- Shorter service life of valve train.
- Greater chance for engine to overheat.

Excessive Recession:

- Worn valve guides.
- Bent valves.
- Debris passed through valve train.

RG,05,DT7367 –19–11NOV97–1/1

Remove Valve Assembly

NOTE: A small magnet may be used to aid removal of valve retainer locks.

1. Using JDE138 Valve Spring Compressor, compress valve springs far enough to remove retainer locks (D).
2. Release spring tension and remove valve rotator (C) and valve spring (B).
3. Remove valves from cylinder head.

NOTE: Identify all parts for assembly in same location.

4. Remove valve stem seals (A) (if equipped) from valve guide tower.

A—Valve Stem Seal
B—Valve Spring
C—Valve Rotator
D—Retainer Locks

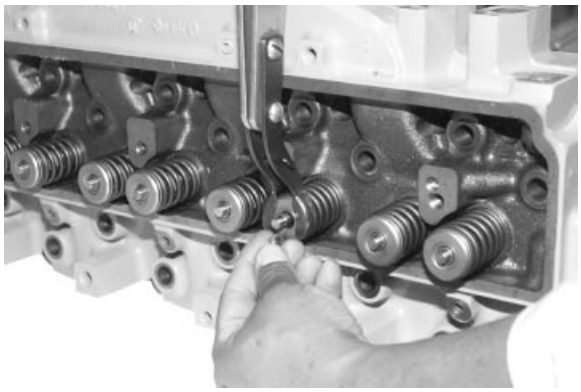

RG7425 –UN–23NOV97

Valve Spring Removal Tool

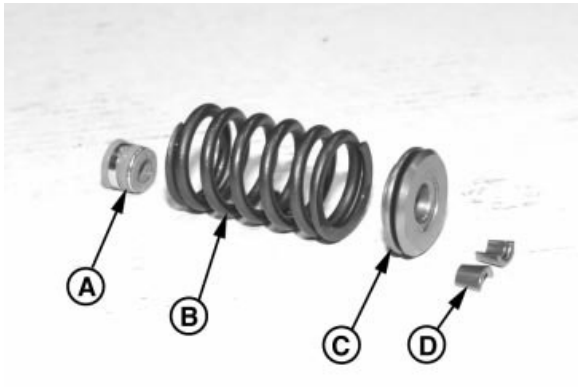

RG7426 –UN–03NOV97

Valve Spring and Components

RG,05,DT7366 –19–11NOV97–1/1

Inspect and Measure Valve Springs

1. Inspect valve springs for alignment, wear, and damage.
2. Using D01168AA Spring Compression Tester, check valve spring tension. Compressed height must be within specification given below.

Valve Springs—Specification

Spring Free Length 0 N (0 lb-force)[1]—Height	54.0 mm (2.125 in.)
Spring Compressed 240—280 N (54—62 lb-force)—Height	46.0 mm (1.81 in.)
Spring Compressed 590—680 N (133—153 lb-force)—Height	34.5 mm (1.36 in.)



RG2732 –UN–04DEC97

Valve Spring



RG7427 –UN–21MAY98

Valve Spring Compression Tester

[1]*Free length may vary slightly between valve springs.*

RG,05,DT7365 –19–11NOV97–1/1

Inspect Valve Rotators

Valve rotators cannot be repaired. Replace valve rotators when valves are replaced or reground.

Ensure that valve rotators turn freely in both directions. Replace if defective.



RG7428 –UN–23NOV97

Valve Rotator

RG,05,DT7364 –19–11NOV97–1/1

Clean Valves

1. Hold each valve firmly against a soft wire wheel on a bench grinder.

IMPORTANT: Any carbon left on the stem will affect alignment in valve refacer. DO NOT use a wire wheel on plated portion of valve stem. Polish the valve stem with steel wool or crocus cloth to remove any scratch marks left by the wire brush.

2. Make sure all carbon is removed from valve head, face and unplated portion of stem.

RG,05,DT7363 –19–11NOV97–1/1

Inspect and Measure Valves

1. Clean and inspect valves, valve stems, stem tips, and retainer lock groove (A). Replace valves that are worn or damaged.

Specification	
Intake Valve Head—OD	46.47—46.73 mm (1.830—1.840 in.)
Exhaust Valve Head—OD	42.37—42.63 mm (1.668—1.678 in.)

NOTE: Intake valve has a larger head OD and is also identified with a dimple (B) on valve head.

A—Retainer Lock Groove
B—Dimple

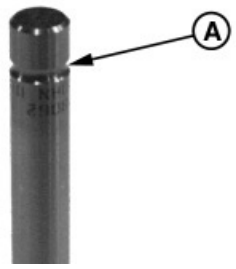

RG7429 –UN–03NOV97

Valve Stem

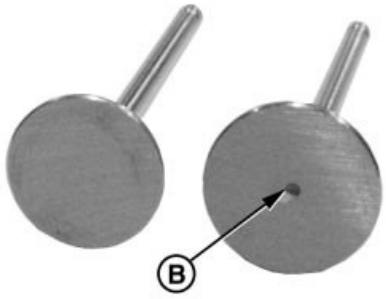

RG7759 –UN–10NOV97

Intake/Exhaust Valve Identification

RG,05,DT7362 –19–11NOV97–1/3

2. Measure valve stem OD. Record measurements and compare with valve guide ID. (See MEASURE VALVE GUIDES later in this group.)

Specification	
Intake Valve Stem—OD	7.864—7.884 mm (0.3096—0.3104 in.)
Exhaust Valve Stem—OD	7.848—7.874 mm (0.3090—0.3100 in.)



RG7430 –UN–23NOV97

Valve Stem Measurement

Continued on next page

RG,05,DT7362 –19–11NOV97–2/3

3. Using a valve inspection center, determine if valves are out of round, bent, or warped.

Specification

Valve Face—Maximum Runout
(Intake and Exhaust) ..... 0.038 mm (0.0015 in.)

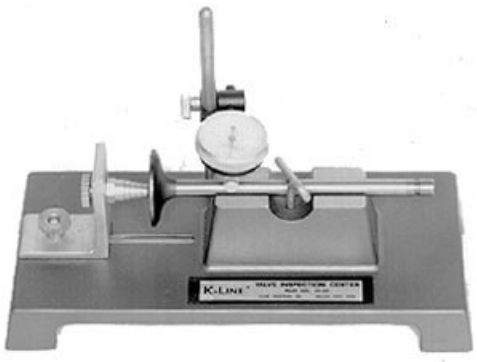

RG4234 –UN–05DEC97

Valve Inspection Center

RG,05,DT7362 –19–11NOV97–3/3

Grind Valves

IMPORTANT: DO NOT nick valve head-to-stem radius when grinding valves. A nick could cause the valve to break. Break all sharp edges after grinding.

Reface serviceable valves to specified angle (A).

Specification

Valves—Face Angle ..... 29.25° ± 0.25°

A—Valve Face Angle

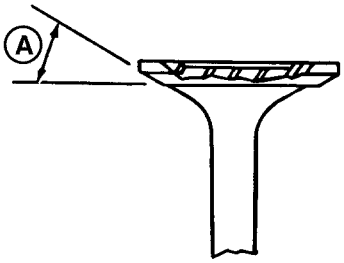

RG4755 –UN–31OCT97

Checking Valve Face Angle

RG,05,DT7361 –19–11NOV97–1/1

Head Gasket Inspection and Repair Sequence

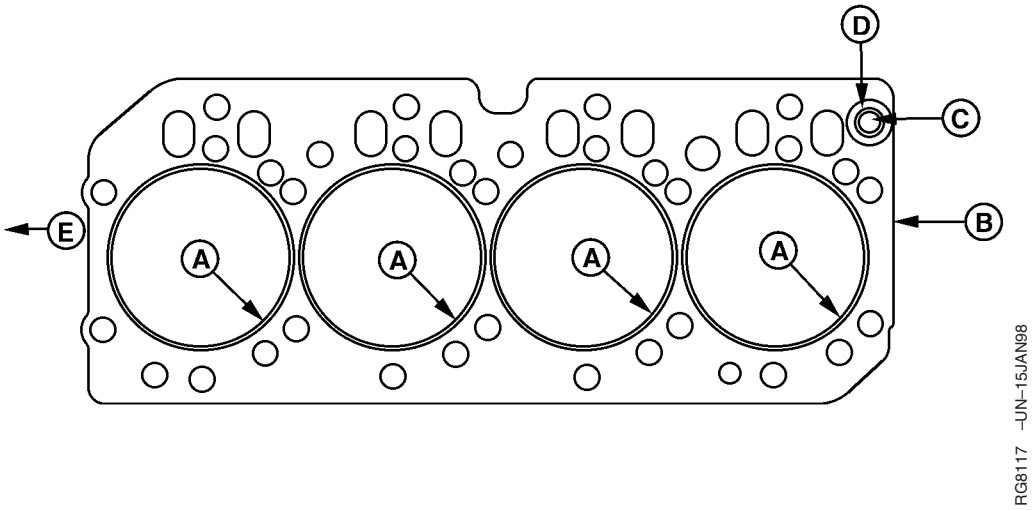

Head Gasket Inspection

A—Combustion Seals (Flanges) **B—Gasket Body** **C—Rocker Arm Oil Port** **D—Elastomer Beading Strip** **E—Front of Engine**

The following inspection procedures are recommended whenever a head gasket joint failure occurs, or when joint disassembly takes place.

1. Review historical data relating to machine operation, maintenance and repair, along with diagnostic observations. Note all areas requiring further inspection and analysis.

2. Remove rocker arm cover and check for presence of coolant in the oil.

3. Record head cap screw torques prior to removal. Upon removal, check cap screw length differences.

4. Remove cylinder head using appropriate lifting devices to prevent handling damage to head gasket. (See REMOVE CYLINDER HEAD in this Group.)

5. Observe surfaces of removed head gasket.

   Examine combustion seals (A) for the following:

   - Flange severed/expanded/cracked/deformed.
   - Adjacent body area burned/eroded.
   - Fire ring severed/displaced/missing.
   - Flange sealing pattern eccentric/contains voids.
   - Discoloration of flange and adjacent body areas.
   - Flange surfaces rough/abraded/channelled.

   Examine gasket body (B) for the following:

   - Combustion gas erosion paths or soot deposits originating at combustion seals.
   - Extreme discoloration/hardening/embrittlement in localized areas.
   - O-ring seal missing/damaged in port area (C).
   - Elastomer missing/damaged in port area (D).
   - Oil or coolant paths from port areas.
   - Localized areas of low compression.

6. Before cleaning components, inspect head, block, and liners for evidence of combustion gas and fluid leakage. Inspect cylinders and valve ports for unusual deposits.

7. Clean block, head, liners, and cap screws. (See Groups 020 and 030.)

8. Proceed with the following dimensional checks and visual inspections:

Continued on next page

Cylinder Head (See Group 020.)

- Check surface flatness/finish.
- Inspect for surface damage.
- Check cylinder head thickness, if resurfacing.

Cylinder Block and Liners (Assembled and Clamped) (See Group 030.)

- Check liner standout at four places on each liner.
- Check liner standout difference between cylinders.

Cylinder Block (See Group 030.)

- Check surface flatness/finish.
- Inspect for surface damage.
- Check liner counterbore depth (if liner is removed).
- Check top deck to crankshaft centerline dimension.
- Inspect cap screw bosses; must be clean/intact.

Cylinder Liner (See Group 030.)

- Check liner flange flatness/finish.
- Check liner flange thickness (if liner is removed).
- Inspect flange for damage.

Cylinder Head Cap Screws (See Group 020.)

- Inspect for corrosion damage.
- Inspect condition of threads.
- Inspect for straightness.
- Check length.

9. When inspections and measurements have been completed, determine most probable causes of joint failure. Make all necessary repairs to joint components, cooling system, and fuel injection system.

10. Reassemble the engine according to procedures and specifications in the repair groups of this manual.

RG,105,JW7656 –19–24MAY00–2/2

Inspect and Clean Cylinder Head

1. Inspect combustion face for evidence of physical damage, oil or coolant leakage, or gasket failure prior to cleaning the cylinder head. Repair or replace cylinder head if there is evidence of physical damage, such as cracking, abrasion, distortion, or valve seat “torching”. Inspect all cylinder head passages for restrictions.

2. Scrape gasket material, oil, carbon, and rust from head. Use a powered wire brush to clean sealing surfaces.

IMPORTANT: Be sure to remove all plugs before cleaning head, as parts can be damaged or destroyed by hot tank solutions.

3. Clean cylinder head in a chemical hot tank, or with solvent and a brush.

4. Dry with compressed air and blow out all passages.

IMPORTANT: Plug in intake located below air inlet may have originally used liquid sealer only. When reinstalling plug, it must have an o-ring seal installed. See parts catalog for proper seal.

5. Perform all component cleaning and inspection before installing new plugs in cylinder head.

RG,05,DT7360 –19–25NOV03–1/1

Check Cylinder Head Flatness

Check cylinder head flatness using D05012ST Precision "Bevelled Edge" Straightedge and feeler gauge. Check lengthwise, crosswise, and diagonally in several places.

Specification

Cylinder Head Flatness—	
Maximum Acceptable Out-of-Flat for Entire Length or Width	0.08 mm (0.003 in.)
Maximum Acceptable Out-of-Flat for Every 150 mm (5.90 in.)	0.03 mm (0.001 in.)

If out-of-flat exceeds specifications, the cylinder head must be reconditioned or replaced. (See MEASURE CYLINDER HEAD THICKNESS later in this group.)

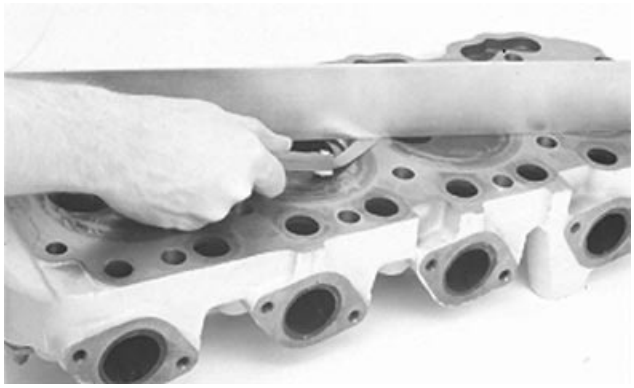

Cylinder Head Flatness Check

RG,05,DT7359 –19–11NOV97–1/1

Measure Cylinder Head Thickness

Measure head thickness from valve cover gasket rail-to-combustion face.

If cylinder head thickness is less than minimum allowable thickness, DO NOT attempt to resurface. Install a new cylinder head.

When resurfacing cylinder head, remove ONLY what is necessary to restore flatness.

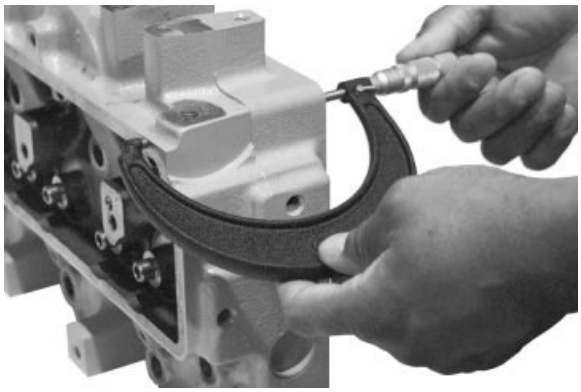

Cylinder Head Thickness Check

Specification

New Cylinder Head—Thickness	104.87—105.13 mm (4.129—4.139 in.)
Minimum Acceptable Thickness	104.24 mm (4.104 in.)
Combustion Face Surface Finish (Surface Grind Only) (AA)	0.7—3.2 micrometers (31—125 micro-in.)
Maximum Wave Depth	0.012 mm (0.0005 in.)
Maximum Material Removal for Resurfacing	0.76 mm (0.030 in.)

IMPORTANT: After resurfacing cylinder head, check for flatness as described earlier. Also check surface finish on combustion face of head.

Measure and record valve recess in cylinder head. (See MEASURE VALVE RECESS IN CYLINDER HEAD earlier in this group.)

RG,05,DT7358 –19–11NOV97–1/1

Clean Injection Nozzle Bores

IMPORTANT: Always turn the tool clockwise through the bore, even when pulling back. This will prevent premature wear on the tool.

Clean carbon deposits from nozzle bores with JDE39 Nozzle Bore Cleaning Tool. Blow debris from bore with compressed air.

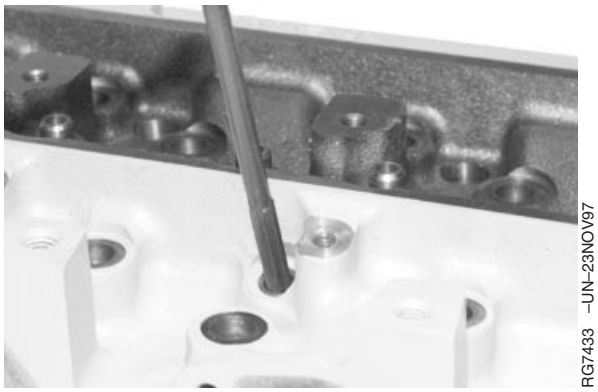

Fuel Injection Nozzle Bore Cleaning

RG,05,DT7357 –19–11NOV97–1/1

Clean Valve Guides

Clean valve guides with a plastic brush before inspection or repair.

NOTE: A few drops of light oil or kerosene will help clean the guides.

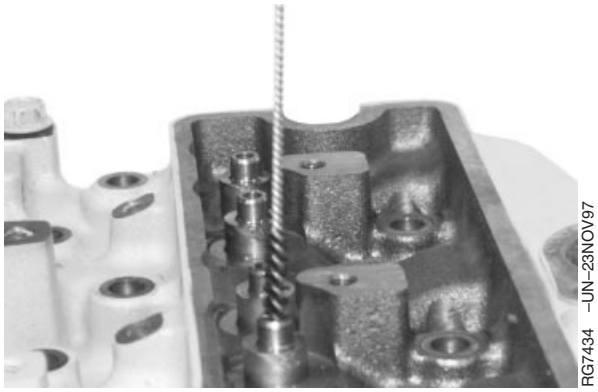

Valve Guide Cleaning

RG,05,DT7356 –19–11NOV97–1/1

Measure Valve Guides

Using a telescopic gauge, measure valve guide wear.

Specification	
Valve Guide Bore (New)—ID	7.912—7.938 mm (0.312—0.313 in.)
Valve Guide-to-Valve Stem (New)—Clearance	0.05—0.10 mm (0.002—0.004 in.)
Wear Limit	0.15 mm (0.006 in.)

NOTE: Valves are available with 0.38 mm (0.015 in.) and 0.76 mm (0.030 in.) oversize stems.

If valve guide-to-stem oil clearance exceeds the wear limit, oversize valve stems are available. Have a qualified machine shop ream valve guides to assure guide-to-stem clearance is within specification.

If valve guide-to-stem oil clearance exceeds the wear limit, but is less than 0.20 mm (0.008 in.), it is acceptable to knurl guides and ream to size. However, installing oversize valve stems is preferred. (See KNURL VALVE GUIDES, later in this group.)

IMPORTANT: Production valve guides have a 5/16-24NF modified internal thread the entire length of guide with major diameter of 8.052—8.128 mm (0.3170—0.3199 in.). Have qualified machine shop thread valve guides accordingly after reaming for oversize valve stems.

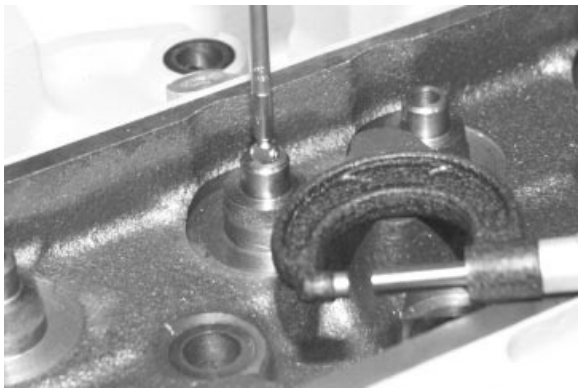

RG7435 –UN–23NOV97

Valve Guide Wear

RG,05,DT7355 –19–11NOV97–1/1

Knurl Valve Guides

IMPORTANT: Valve guide knurling should only be done by experienced personnel familiar with equipment and capable of maintaining required specification.

ALWAYS knurl valve guides before reaming to assure proper valve guide-to-stem clearance.

1. Use JT05949 Valve Guide Knurler Kit to knurl valve guides. Use kit exactly as directed by the manufacturer.
2. After knurling, ream valve guide to finished size to provide specified stem-to-guide clearance.

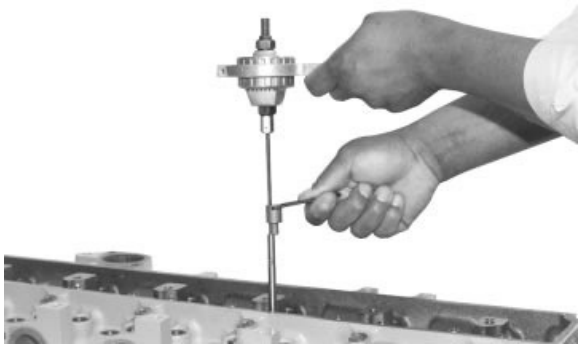

Knurling Valve Guides

RG,05,DT7354 –19–11NOV97–1/1

Clean and Inspect Valve Seats

1. Use an electric hand drill with D17024BR End Brush to remove all carbon on valve seats.
2. Inspect seats for excessive wear, cracks, or damage.
3. Check entire combustion face for rust, scoring, pitting, or cracks.

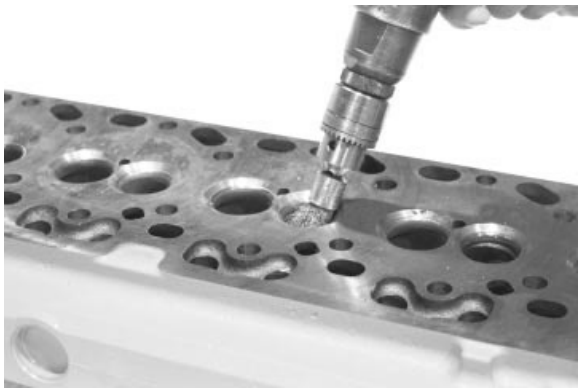

Valve Seat Cleaning and Inspection

RG,05,DT7379 –19–11NOV97–1/1

Grind Valve Seats

IMPORTANT: Valve seat grinding should only be done by experienced personnel familiar with equipment and capable of maintaining required specifications. ALWAYS keep valve guides and work area clean when grinding valve seats to maintain valve guide bore-to-seat runout.

Grinding valve seats increases seat width and valve recess in cylinder head. DO NOT grind excessively. Only a few seconds are required to recondition the average valve seat. Dress grinding stone as necessary to maintain specified seat angle.

Support the weight of grinder to avoid excessive pressure on the stone.

Blend or radius all sharp edges after grinding valve seats for a more effective valve face-to-seat seal.

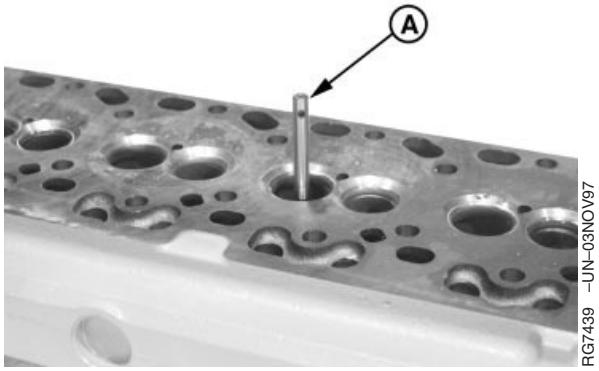

Valve Seat Grinding Pilot

A—Pilot

1. Install appropriate pilot (A) in valve guide bore.

Continued on next page

RG,05,DT7353 –19–11NOV97–1/4

2. Install appropriate grinding stone (B) on arbor (C) and position onto valve seat.

B—Grinding Stone
C—Arbor

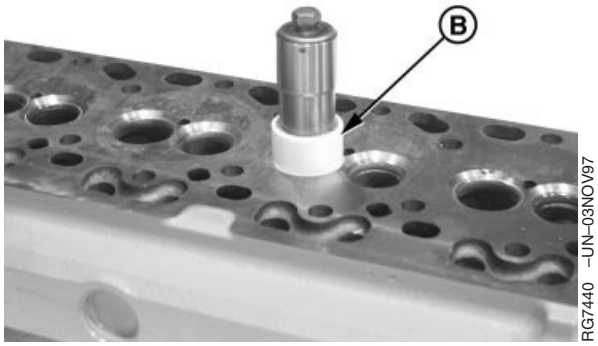

Valve Seat Grinding Stone

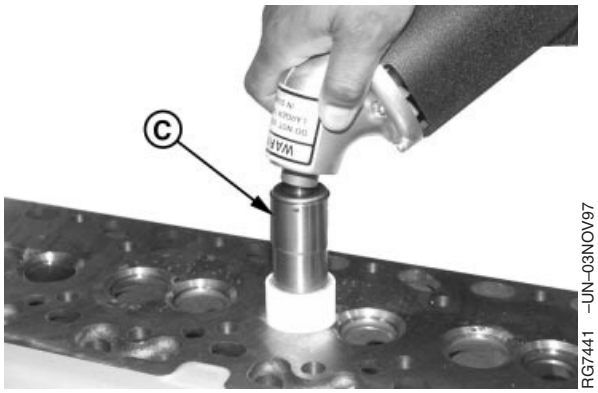

Valve Seat Grinding Arbor

RG,05,DT7353 –19–11NOV97–2/4

3. Using drill from JT05893 Heavy-Duty Seat Grinder Set, grind valve seats to the following specifications:

Specification	
Valve Seat Grinding—Seat Angle (D)	30°
Valve Seat Width (E)	1.50—2.00 mm (0.059—0.079 in.)
Maximum Valve Seat Runout (F)	0.08 mm (0.003 in.)

4. Use a vernier caliper or scale to measure seat width. If valve seat is too wide, reduce the width with a narrowing stone.

NOTE: A narrowing stone will change the top angle of the seat and reduce the outer diameter of the valve seating area. Varying the width changes the fine contact between valve face and seat. If seat width is too narrow, valve may burn or erode.

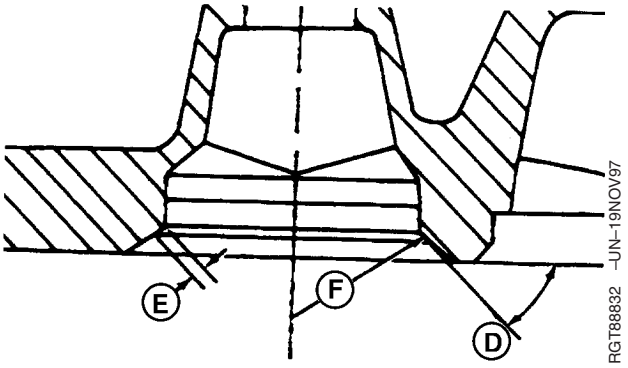

Valve Seat Grinding Specifications

D—Valve Seat Angle
E—Valve Seat Width
F—Valve Seat Runout

Continued on next page

RG,05,DT7353 –19–11NOV97–3/4

5. If valve does not seat properly, use an eccentrimeter (A) to check valve seat runout. Use a new or refaced valve and blueing to check contact between valve seat and face. If necessary, lap the valve onto its seat using a lapping tool and lapping compound. Replace valves and inserts as necessary.

6. Install new or refaced valve and check valve recess in cylinder head after grinding. (See MEASURE VALVE RECESS IN CYLINDER HEAD earlier in this group.)

A—Eccentrimeter

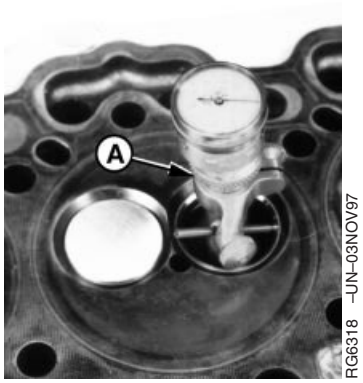

Eccentrimeter

RG,05,DT7353 –19–11NOV97–4/4

Remove Valve Seat Inserts

IMPORTANT: Be careful not to damage cylinder head when removing valve seats. Valve seat removal should only be done by experienced personnel familiar with procedures.

DO NOT use an oxy-acetylene torch to remove valve seat inserts, as it alters the hardness of the cylinder head.

Valve seat inserts are made of sintered (powdered) metal. Remove inserts by one of the following methods:

Continued on next page

RG,05,DT7352 –19–11NOV97–1/4

Raising Burr on Valve Seat Insert

1. Using a carbide deburring tool (A), raise a burr (B) on bottom of valve seat insert.

A—Deburring Tool
B—Burr

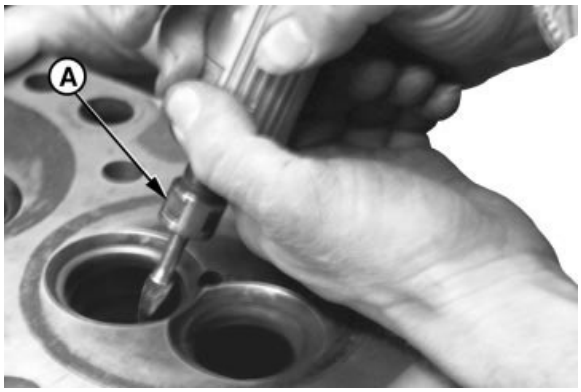

RG7816 –UN–13NOV97

Carbide Deburring Tool



RG7817 –UN–13NOV97

Valve Seat

RG,05,DT7352 –19–11NOV97–2/4

2. Protect surface of cylinder head with cardboard or cloth. Using a chisel with special ground end (C), tap handle of chisel with hammer until valve seat insert (D) comes loose.

C—Special Ground Chisel
D—Valve Seat Insert

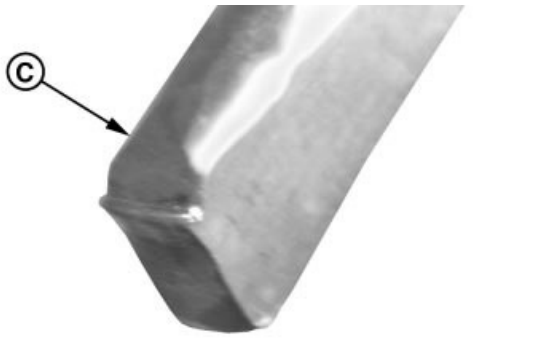

RG7818 –UN–13NOV97

Chisel for Valve Seat Insert Removal

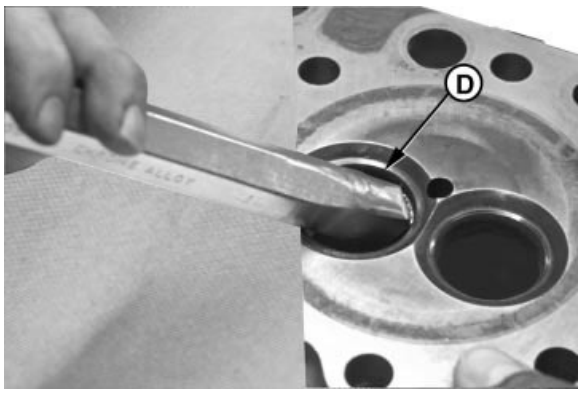

RG7760 –UN–10NOV97

Valve Seat Insert Removal

Continued on next page

RG,05,DT7352 –19–11NOV97–3/4

Using an Arc Welder

1. Protect the valve guide by installing a cap screw or dowel in guide to protect from weld spatter.
2. Protect the cylinder head surface with a non-flammable welder's cloth (A). Apply a thin bead of weld (B) around ID of valve seat insert. Allow insert to cool and use a screwdriver (C) or similar tool and carefully pry insert from bore.
3. After removal of inserts, thoroughly clean area around valve seat bore and inspect for damage or cracks. Replace cylinder head as necessary.

A—Welders Cloth
B—Weld Bead
C—Screwdriver

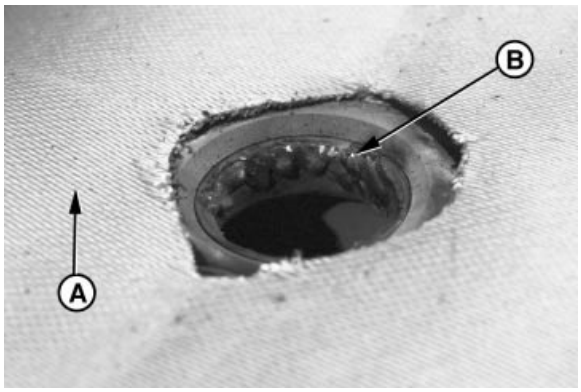

RG7761 –UN–10NOV97

Weld Bead for Valve Seat Insert Removal

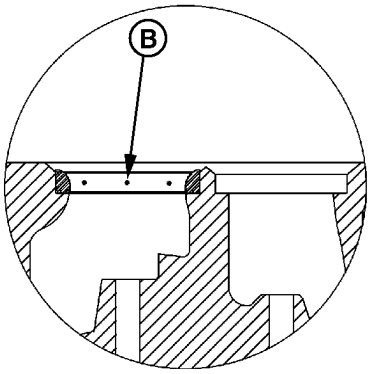

RG7813 –UN–13NOV97

Weld Bead Location

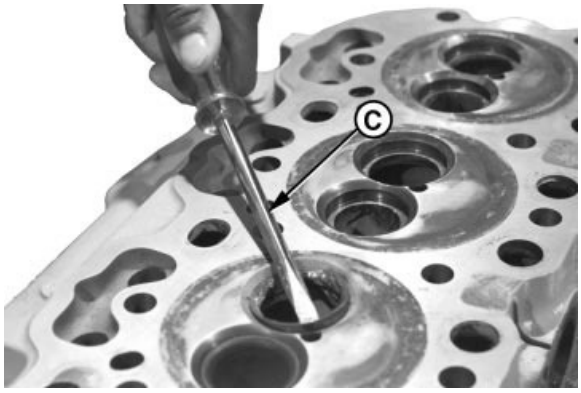

RG7763 –UN–10NOV97

Valve Seat Insert Removal

RG,05,DT7352 –19–11NOV97–4/4

Measure Valve Seat Bore in Cylinder Head

If bore dimensions are not within specification, machine head to the following specifications:

02
020
38

Exhaust Valve Seat Insert Bore Specifications:

A	.....	42.987—43.013 mm (1.6924—1.6934 in.)
B	.....	3.82 mm (0.150 in.) Reference
C	.....	9.936—10.064 mm (0.3912—0.3962 in.)
D	.....	38—42°
E	.....	Maximum Radius 0.5 mm (0.019 in.)
Maximum surface finish of bore “A”	.....	0.00158 mm (0.000062 in.)

Intake Valve Seat Insert Bore Specifications:

A	.....	47.104—47.130 mm (1.8545—1.8555 in.)
B	.....	3.45 mm (0.136 in.) Reference
C	.....	9.936—10.064 mm (0.3912—0.3962 in.)
D	.....	38—42°
E	.....	Maximum Radius 0.5 mm (0.019 in.)
Maximum surface finish of bore “A”	.....	0.00158 mm (0.000062 in.)

Replacement Valve Seat Insert OD:

Intake	.....	47.155—47.181 mm (1.8565—1.8575 in.)
Exhaust	.....	43.038—43.064 mm (1.6944—1.6954 in.)

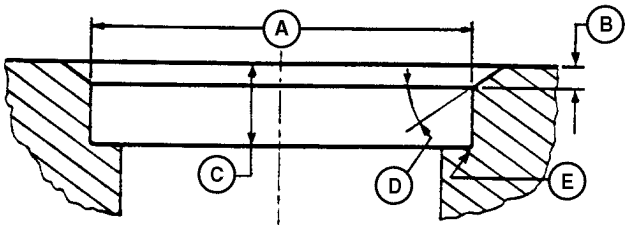

Cylinder Head Valve Seat Bore

RG,05,DT7351 –19–11NOV97–1/1

Install Valve Seat Inserts

1. Use JDG676 Valve Seat Driver (A) and JDG675 Valve Seat Insert Installing Adapter (B) to install valve seat inserts in cylinder head.

   Use one end of JDG675 Adapter to install intake valve seat inserts and the other end to install exhaust valve seat inserts.

2. Install valves and measure valve recess. (See MEASURE VALVE RECESS IN CYLINDER HEAD, earlier in this group.)

3. Grind valve seats as required to maintain correct valve recess and valve face-to-seat seal. (See GRIND VALVE SEATS, earlier in this group.)

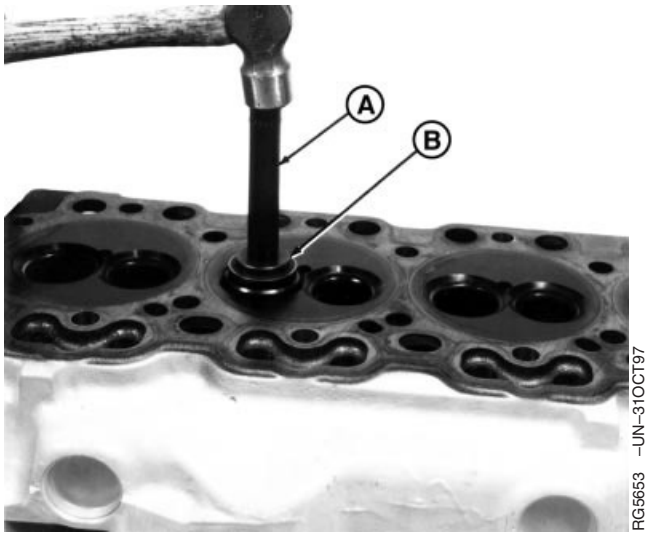

Valve Seat Insert in Cylinder Head Installation

A—Valve Seat Driver
B—Adapter

RG,05,DT7350 –19–11NOV97–1/1

Install Valves

1. Lubricate valve stems and guides with clean engine oil.

NOTE: Valves must move freely in guide and seat properly in head to form an effective seal.

2. Insert valves in head (if valves are reused, install in same location from which removed).

3. Use JDG678 Valve Stem Seal Installer (A) to slide valve stem seals (B) over valve stems and onto valve guide tower (C).

NOTE: JDG678 Installer may also be used to install oversize valve stem seals on oversize valve stems.

4. Install valve springs and rotators.

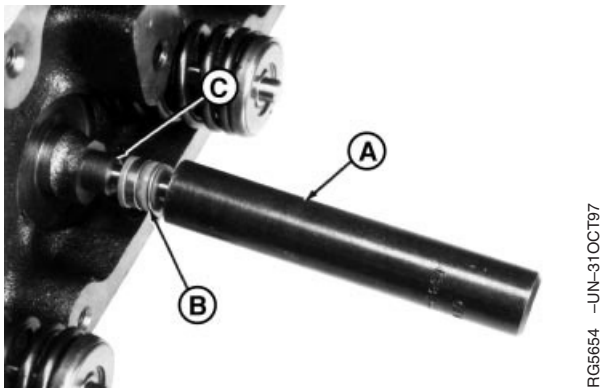

Valve Stem Seal Installation Tool

A—Seal Installer
B—Valve Stem Seals
C—Valve Guide Tower

Continued on next page

RG,05,DT7349 –19–11NOV97–1/2

5. Compress valve springs using JDE138 Valve Spring Compressor (A) and install retainer locks (B) on valve stems.
6. Strike end of each valve three or four times with a soft mallet (non-metallic) to insure proper positioning of the retainer locks.
7. Recheck valve recess. (See MEASURE VALVE RECESS IN CYLINDER HEAD, earlier in this group.)

A—Spring Compressor
B—Retainer Locks

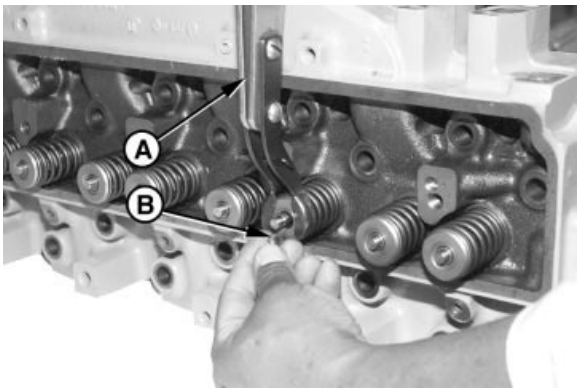

RG7425A –UN–03NOV97

Valve Spring Compressor and Retainer Locks

RG,05,DT7349 –19–11NOV97–2/2

Inspect Cylinder Head Cap Screws

Inspect cap screws for corrosion, damage and overall condition of threads for indication of other problems.**DO NOT REUSE CAP SCREWS.**



RG6319 –UN–23NOV97

Cylinder Head Cap Screw

RG19661,0000019 –19–29JUN05–1/1

Inspect and Clean Exhaust Manifold

1. Thoroughly clean all passages and gasket surfaces in exhaust manifold and exhaust elbow.
2. Inspect entire exhaust manifold for cracks or damage. Replace parts as necessary.

RG,05,DT7347 –19–11NOV97–1/1

Clean and Inspect Top Deck of Cylinder Block

1. Remove gasket material, rust, carbon, and other foreign material from top deck. Gasket surface must be clean.
2. Clean threaded holes in cylinder block using JDG680 Tap or any 1/2-13 UNC-2A tap about 76 mm (3.0 in.) long. Use compressed air to remove debris and fluids from the cap screw holes. Replace block if there is evidence of damage.
3. Use compressed air to remove all loose foreign material from cylinders and top deck.

IMPORTANT: All debris must be cleaned from the camshaft followers before assembling the engine.

4. If not previously done, remove camshaft followers from block and wash in solvent. Lubricate with clean engine oil and install in the same bore.
5. Inspect top deck for flatness and serviceability. (See MEASURE CYLINDER BLOCK TOP DECK FLATNESS in Group 030.)

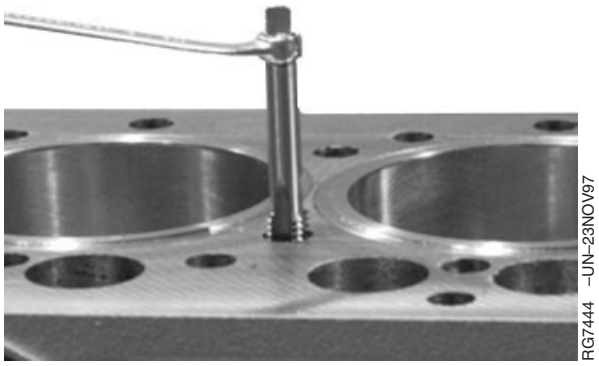

Cleaning Threaded Holes in Cylinder Block



Clean and Lube Camshaft Followers

RG,05,DT7346 –19–11NOV97–1/1

Check Cylinder Liner Standout (Height Above Block)

1. Secure liners using cap screws and flat washers. Flat washers should be at least 3 mm (1/8 in.) thick. Tighten cap screws to 70 N•m (50 lb-ft).

2. Using JDG451 or KJD10123 Gauge (B) and D17526CI or D17527CI Dial Indicator (C), measure liner height (A) at 1, 5, 7, and 11 o'clock positions as viewed from flywheel end of engine. Record all measurements by cylinder number.

Specification

Cylinder Liner—Height above Block	0.030—0.100 mm (0.001—0.004 in.)
Maximum Permissible Height Difference at Nearest Point of Two Adjacent Liners, or Within a Single Liner	0.05 mm (0.002 in.)

3. Remove and shim, or replace, any liner that does not meet height specifications. (See Measure and Adjust Cylinder Liner Standout (Height Above Block) in Group 030.)

A—Liner Height
B—Gauge
C—Dial Indicator

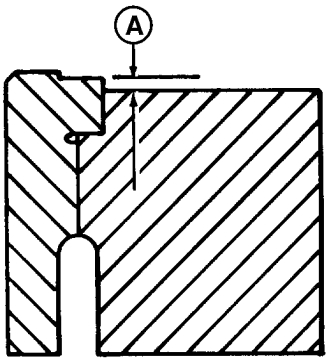

RG6439 –UN–03NOV97

Cylinder Liner Standout (Above Block)

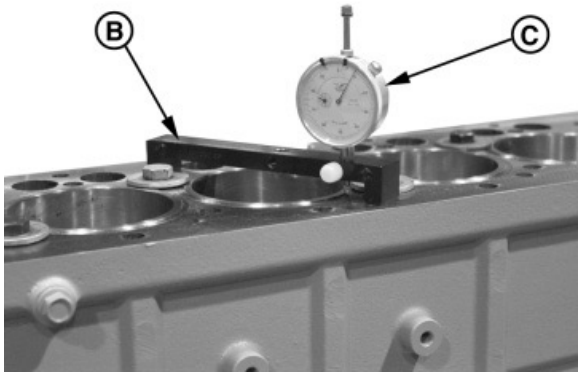

RG7445A –UN–03NOV97

Measure Cylinder Standout (Above Block)

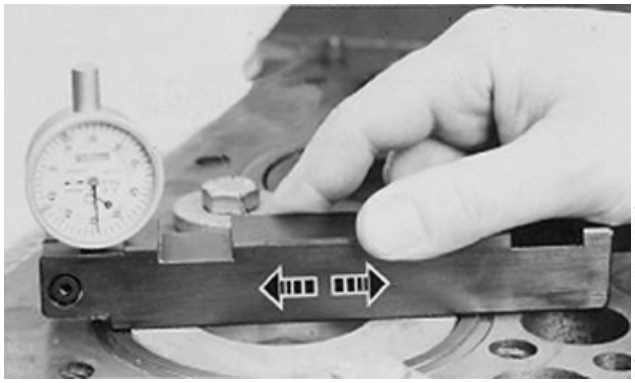

RG12441 –UN–01DEC03

Using KJD10123

RG,05,DT7345 –19–24NOV03–1/1

Install Cylinder Head

1. Dip fuel supply pump push rod (A) (if equipped) in clean engine oil and carefully install in cylinder block before installing cylinder head.

A—Fuel Supply Pump Push Rod



Fuel Supply Pump Push Rod

RG,05,DT7344 –19–07NOV03–1/4

2. Reinstall two dowel pins (B) in cylinder block at locating holes, if removed.

IMPORTANT: ALWAYS thoroughly inspect cylinder head gasket for possible manufacturing imperfections. Return any gasket that does not pass inspection.

3. Place new head gasket on cylinder block. Do not use sealant; install dry.

B—Dowel Pins

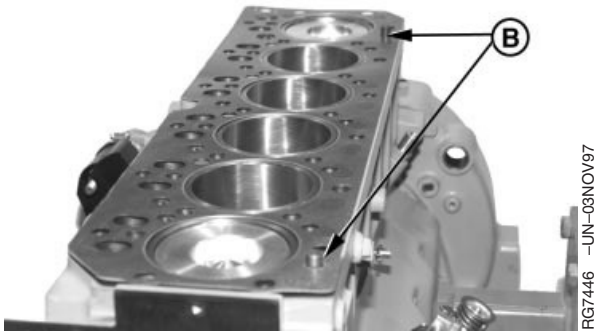

Cylinder Head Dowel Pins

Continued on next page

RG,05,DT7344 –19–07NOV03–2/4

IMPORTANT: The head gasket can be damaged if head is repositioned while resting on engine block. Install and use guide studs (A) to position cylinder head on block.

4. Position cylinder head over guide studs and lower onto cylinder block.

A—Guide Stud

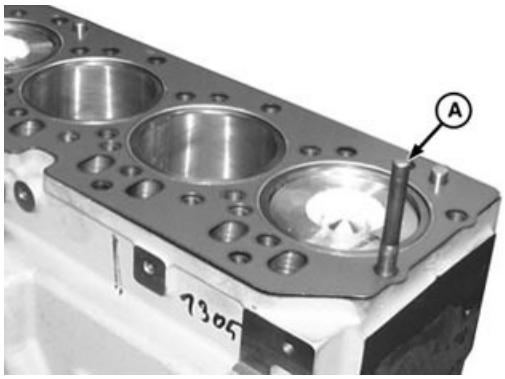

RG13377 –UN–10DEC03

Guide Studs

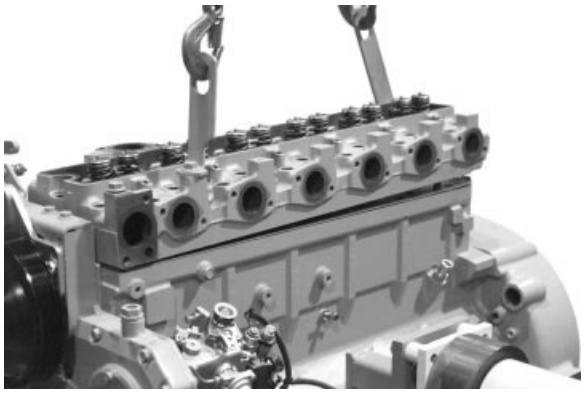

RG7415 –UN–23NOV97

Cylinder Head to Block Installation

Continued on next page RG,05,DT7344 –19–07NOV03–3/4

5. Dip entire cap screw in JDT305 Lubricant. Remove excess from screw.

6. Remove guide studs.

IMPORTANT: Always use new cylinder head cap screws.

7. Install new flanged-head cylinder head cap screws.

8. Tighten all cap screws to specified torques (in sequence shown, beginning with No. 1), following steps 1—4 below. Then, torque-turn cap screws following procedure on next page.

Cylinder Head Cap Screws—Specification

Step 1—Initial—Torque	100 N•m (75 lb-ft)
Step 2—Second—Torque	150 N•m (110 lb-ft)
Step 3—Verify (After 5 Minutes)—Torque	150 N•m (110 lb-ft)
Step 4—Final—Torque-Turn	Tighten each screw an additional 60° ± 10°. (See TORQUE-TURN METHOD FOR PROPER TORQUE in this group.)

Retorque of cylinder head cap screws after engine break-in is not required when using the recommended torque procedure along with flanged-head cap screw.

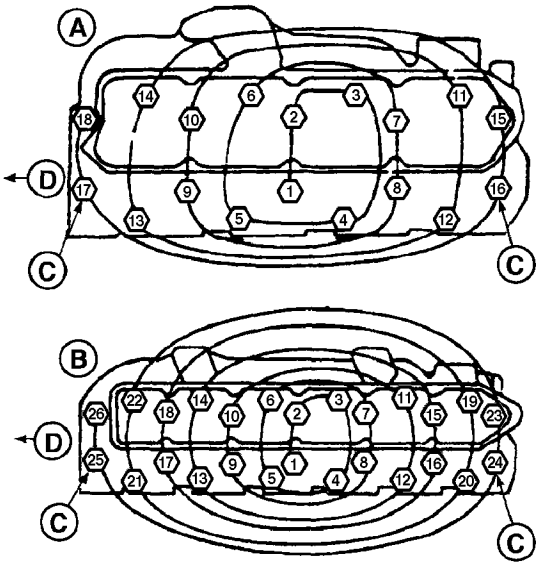

RG7646 –UN–22MAY00

Cylinder Head Bolt Tightening Sequence

A—4-Cylinder Engine
B—6-Cylinder Engine
C—Locating Holes (Guide Stud Locations)
D—Arrow Toward Front of Engine

RG,05,DT7344 –19–07NOV03–4/4

Torque-Turn Method for Proper Torque

After tightening cap screws to 150 N•m (110 lb-ft), use JT05993 Torque Angle Gauge or the line scribe method below to tighten each cap screw an additional 60°.

Line scribe method:

1. Make two marks (A and B) on socket 1/6 turn (60° ± 10°) apart.
2. Place socket on cap screw and make a mark on cylinder head (C) in line with first mark (A) on cap screw.
3. Tighten all cap screws (in sequence shown on previous page) until second mark (B) on socket aligns with mark (C) on cylinder head.

Retorque of cylinder head cap screws after engine break-in is not required when using the recommended torque procedure along with flanged-head cap screws.

A—First Mark on Socket
B—Second Mark on Socket
C—Mark on Cylinder Head Surface

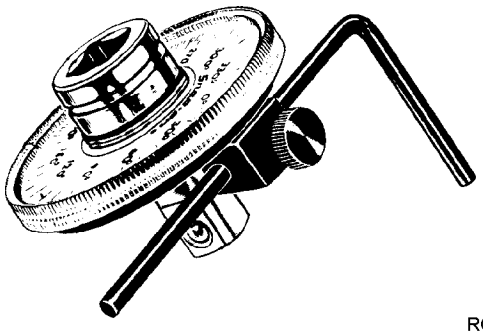

RG5698 –UN–05DEC97

Torque Angle Gauge

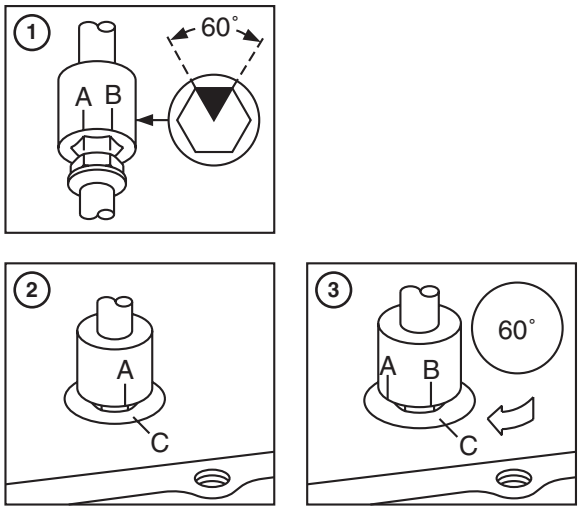

RG11798 –UN–25OCT01

Torque-Turn Tightening Procedure

RG,05,DT7343 –19–11NOV97–1/1

Install Rocker Arm Assembly

1. Install push rods in same location from which removed.

NOTE: Valve stem tips are specially hardened; wear caps are not required.

IMPORTANT: Relieve tension on rocker arm adjusting screw to avoid damaging rocker arm shaft during installation.

2. Position rocker arm assembly on engine.

IMPORTANT: Oil supply hole in rocker arm shaft must be positioned at the flywheel end of engine and facing downward when rocker shaft is installed.

NOTE: Washer under rocker arm support stud is not required on later engines which have 2 mm (0.08 in.) higher rocker arm support.

3. Lubricate all rocker arms with engine oil and make sure they move freely. Tighten rocker arm support studs in a criss-cross sequence to specifications.

Specification	
Rocker Arm Support Studs— Torque	60 N•m (44 lb-ft)

4. Adjust valve clearance. (See CHECK AND ADJUST VALVE CLEARANCE earlier in this group.)

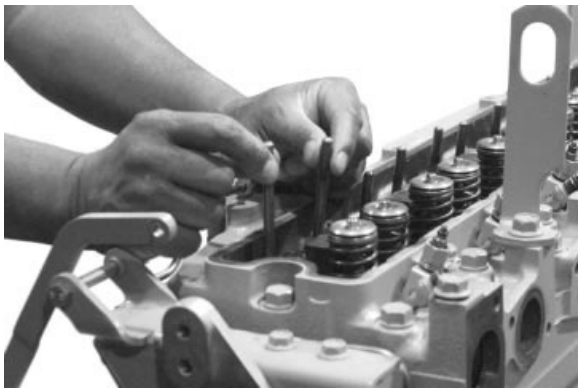

Rocker Arm Assembly Installation

RG,05,DT7342 –19–24NOV99–1/1

Inspect and Clean Ventilator Outlet Hose

NOTE: If ventilator hose or tube is crimped or restricted in any way, high oil pressure or possible loss of oil could result in engine damage.

1. Check ventilator outlet hose (A) on rocker arm cover for bent or damaged condition. Replace if necessary.
2. Clean ventilator hose and tube if they are restricted.

A—Ventilator Outlet Hose



Ventilator Outlet Hose Inspection

RG,05,DT7341 –19–11NOV97–1/1

Remove, Inspect, and Install Closed Crankcase Ventilation System (If Equipped)

NOTE: CCV valve may be mounted to engine (as shown) or remotely mounted. Verify that centerline of mounted CCV valve is between 350 mm-450 mm (13.78-17.72 in.) above centerline of crankshaft. On engines with dual dipstick option, the CCV valve must be mounted at a minimum height of 420 mm (16.54 in.). Correct the mounting location if it is not correct.

1. Remove parts (A-H).
2. Inspect hoses (C, D and G) for kinks, blockage, or other damage.
3. With check valve (H) connected to hose (G), hold hose from end opposite check valve, letting check valve hang.
4. Pour oil into open end of hose. Oil should pass through check valve before hose is full. If it does not, verify the following:
   - Hose length is at least 275 mm (10.83 in.).
   - Hose is not plugged.
   - Check valve is installed with black end towards crankcase.
   - Check valve functions correctly.
5. Verify that crankcase oil drain tube (I) is not plugged.

NOTE: CCV valve has no serviceable internal parts.

6. Inspect CCV valve (A) for cracks or other damage.
7. Replace parts as necessary.
8. Install parts (A—H).

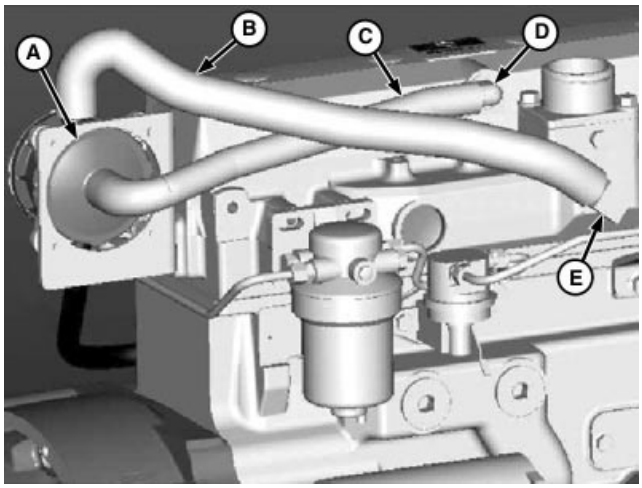

RG12426 –UN–20NOV03

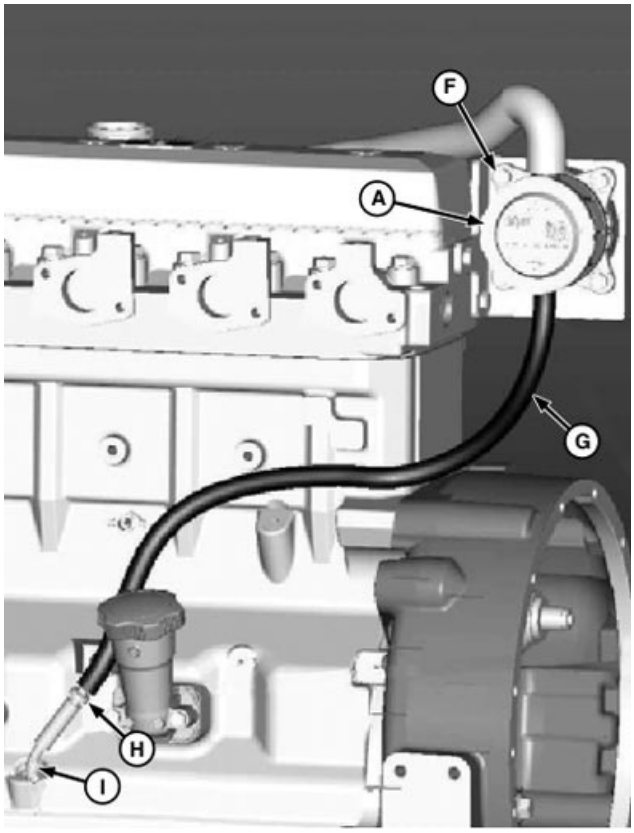

RG12427 –UN–03FEB04

A—Closed Crankcase Ventilation (CCV) Valve
B—Hose, CCV Valve to Intake Manifold
C—Hose, Valve Cover to CCV Valve
D—Valve Cover Vent Fitting
E—Intake Manifold Fitting
F—Cap Screw, CCV Valve to Bracket
G—Oil Drain Hose
H—Check Valve
I—Crankcase Oil Drain Tube

OUO1083,00005FB –19–24NOV03–1/1

Install Rocker Arm Cover

IMPORTANT: Replace sealing ring (A) every time the rocker arm cover is removed during engine or cylinder head overhaul.

The following procedures should be used to install a new sealing ring (A):

- Carefully remove the old sealing ring from rocker arm cover. Do not use any cutting tool that could damage the cover.
- Clean the groove with acetone. Dry with compressed air.
- Clean mating surface of cylinder head.



Rocker Arm Cover Sealing Ring

A—Sealing Ring

Standard Rocker Arm Cover Seal

1. Install a new sealing ring in groove, start at ends and work toward the center of the cover. Do not use sealant on sealing ring.

2. Install rocker arm cover with sealing ring.

RG,05,DT7340 –19–24NOV03–1/5

3. Install O-rings (B) and nuts.

4. Tighten all nuts to specifications, starting at the center and alternating sides until reaching the ends. DO NOT OVERTIGHTEN.

Specification	
Rocker Arm Cover Nuts (Two-Valve Head)—Torque	35 N•m (26 lb-ft)

B—O-Rings

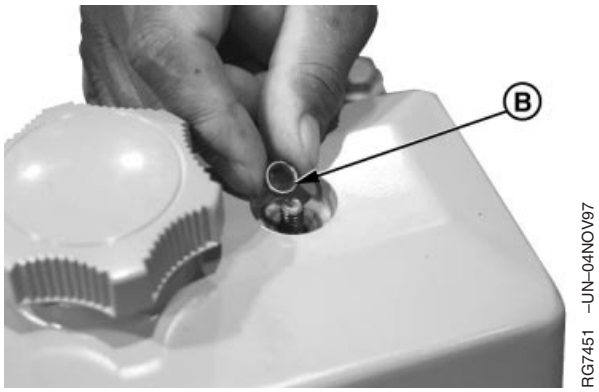

Rocker Arm Cover O-Rings

Continued on next page

RG,05,DT7340 –19–24NOV03–2/5

5. Install rocker arm cover button plugs (C).

C—Plugs

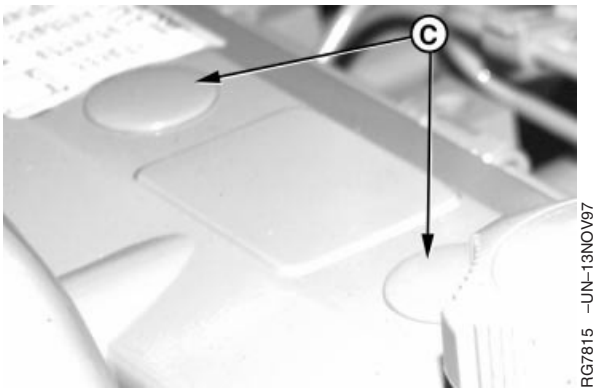

Rocker Arm Cover Button Plugs

Continued on next page

RG,05,DT7340 –19–24NOV03–3/5

Extended High Temperature Rocker Arm Cover Seal (Optional)

NOTE: Optional seal kit is available to prevent oil leakage between valve cover and head, in the area above the exhaust ports and/or directly beneath the turbo, as a result of extended high temperature operation.

1. Install rocker arm cover without seal. Torque cover nuts to specification.

Specification

Rocker Arm Cover Nuts
(Two-Valve Head)—Torque..... 35 N•m (26 lb-ft)

2. Use a feeler gauge to measure the gap (B) between the rocker arm cover (A) and the cylinder head (C).

3. Remove rocker arm cover from engine.

4. If gap (B) measured in Step 2 is less than 1.2 mm (0.047 in.), install one shim (E) onto each rocker arm cover hold down stud (D).

5. If the gap measured in Step 2 is greater than 1.2 mm (0.047 in.), do not install any shims.

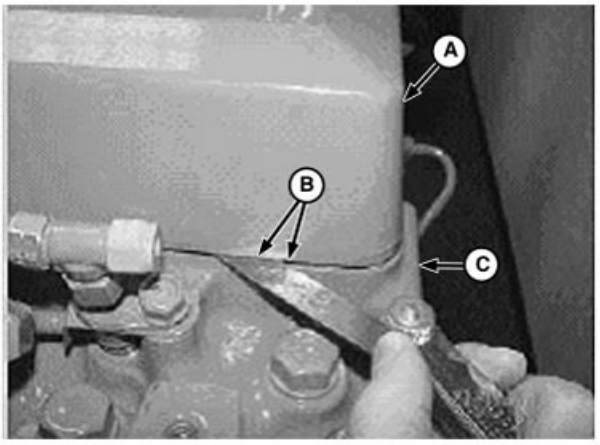

RG12435 –UN–01DEC03

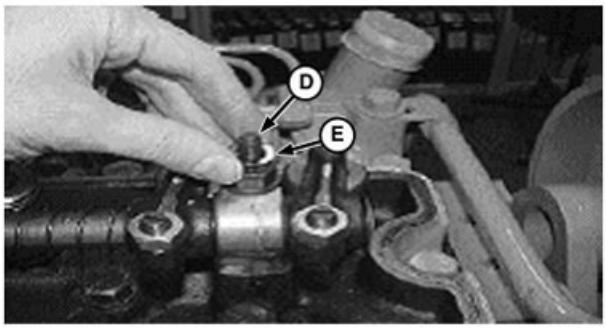

RG12436 –UN–01DEC03

A—Rocker Arm Cover
B—Gap
C—Cylinder Head
D—Hold-Down Stud
E—Shim

Continued on next page

RG,05,DT7340 –19–24NOV03–4/5

NOTE: To ease installation and prevent stretching of seal, start seal in groove in multiple locations.

6. Install the new rocker arm cover seal (A), by pushing seal into rocker cover groove (B).

7. Install rocker arm cover and hold down nuts. Tighten hold down nuts to specification.

Specification

Rocker Arm Cover Nuts
(Two-Valve Head)—Torque..... 35 N•m (26 lb-ft)

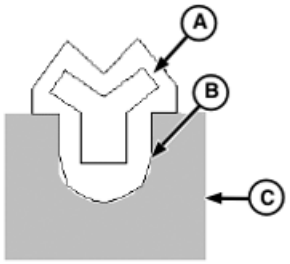

RG12437 –UN–01DEC03

A—Rocker Arm Cover Seal
B—Cover Groove
C—Rocker Arm Cover

RG,05,DT7340 –19–24NOV03–5/5

Complete Final Assembly

1. Install injection nozzles (C) and injection lines (B) as an assembly. See the appropriate procedure:
   - INSTALL FUEL INJECTION NOZZLES in Section 02, Group 090 of CTM207—Mechanical Fuel Systems.
   - INSTALL FUEL INJECTION NOZZLES in Section 02, Group 090 of CTM170—Level 4 Electronic Fuel Systems with Bosch VP44 Pump.
   - INSTALL FUEL INJECTION NOZZLES in Section 02, Group 090 of CTM331—Level 12 Electronic Fuel Systems with Stanadyne DE10 Pump.
   - INSTALL FUEL INJECTION NOZZLES in Section 02, Group 090 of CTM284—Level 1 Electronic Fuel Systems with Delphi/Lucas DP201 Pump.

2. Install fuel leak-off line (A). See Section 02, Group 090 of CTM207—Mechanical Fuel Systems, CTM170—Level 4 Electronic Fuel Systems with Bosch VP44 Pump, CTM331—Level 12 Electronic Fuel Systems with Stanadyne DE10 Pump or CTM284—Level 1 Electronic Fuel Systems with Delphi/Lucas DP201 Pump.

3. Install guide pins (D) in cylinder head to aid in installation of exhaust manifold.

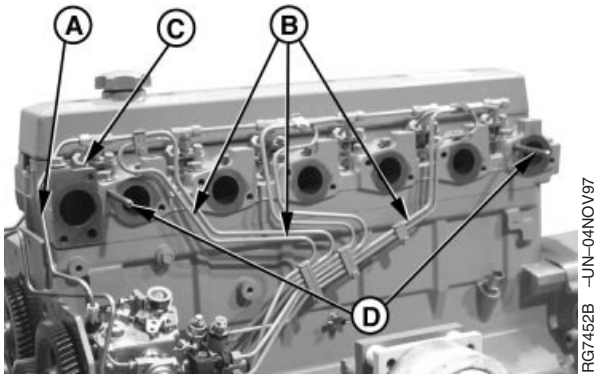

RG7452B –UN–04NOV97

Fuel Lines and Injection Nozzles

A—Fuel Leak-Off Line
B—Injection Lines
C—Injection Nozzles
D—Guide Pins

Continued on next page

RG,05,DT7339 –19–10DEC03–1/7

NOTE: On some engines, the thermostat housing/coolant manifold is part of the cylinder head.

4. Install thermostat housing/coolant manifold (A). (See INSTALL COOLANT MANIFOLD, THERMOSTAT COVER AND THERMOSTAT in Group 070.)

A—Thermostat Housing/Coolant Manifold

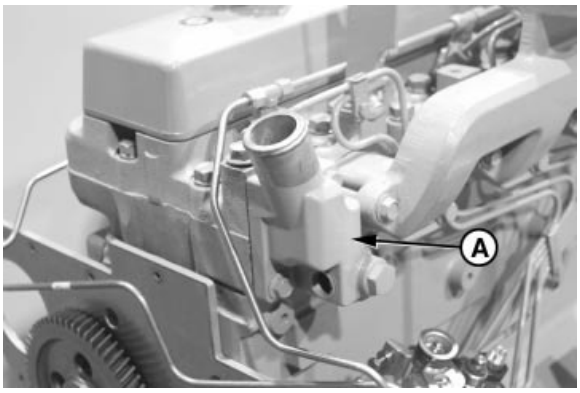

Thermostat Housing/Coolant Manifold

RG,05,DT7339 –19–10DEC03–2/7

5. Install thermostat housing-to-coolant pump tube (B).

B—Thermostat Housing to Coolant Pump Tube

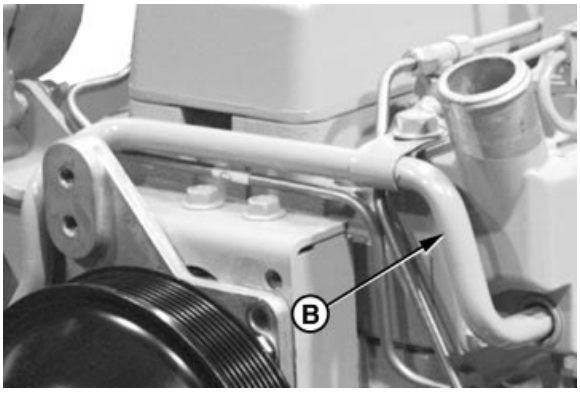

Thermostat Housing to Coolant Pump Tube

Continued on next page

RG,05,DT7339 –19–10DEC03–3/7

6. Using guide studs, install exhaust manifold (B) with gasket(s) (A). (See REMOVE, INSPECT, AND INSTALL EXHAUST MANIFOLD in Group 080.)

A—Stainless Steel Gasket Shown
B—Exhaust Manifold

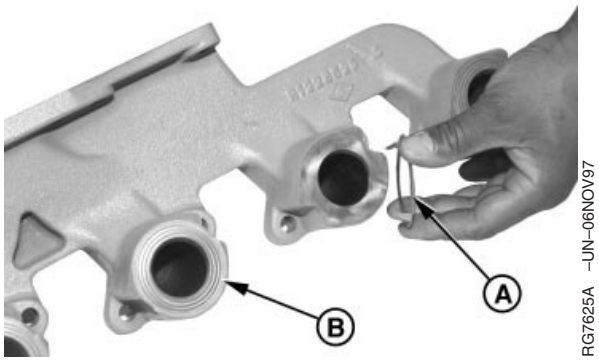

Exhaust Manifold Steel Gaskets

RG,05,DT7339 –19–10DEC03–4/7

7. Install turbocharger (A), if equipped, exhaust elbow (shown removed) and turbocharger oil inlet and drain lines (C). (See INSTALL TURBOCHARGER in Group 080.). Install air intake pipe (B). (See REMOVE AND INSTALL AIR INTAKE PIPE in Group 080.)

A—Turbocharger
B—Air Intake Pipe
C—Turbocharger Oil Inlet and Oil Drain Lines

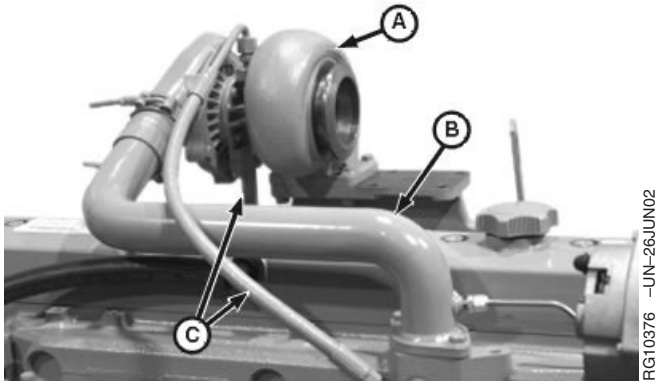

Turbocharger

Continued on next page

RG,05,DT7339 –19–10DEC03–5/7

NOTE: Position of fuel filters (A) and (B) and supply pump (C) vary by engine and injection pump applications. See Section 02, Group 090 of CTM207—Mechanical Fuel Systems, CTM170—Level 4 Electronic Fuel Systems with Bosch VP44 Pump, CTM331—Level 12 Electronic Fuel Systems with Stanadyne DE10 Pump or CTM284—Level 1 Electronic Fuel Systems with Delphi/Lucas DP201 Pump, for procedures to remove filter(s) and/or supply pump as required.

8. Install fuel filter base and fuel filters (A) and (B) as required. See Section 02, Group 090 of CTM207—Mechanical Fuel Systems, CTM170—Level 4 Electronic Fuel Systems with Bosch VP44 Pump, CTM331—Level 12 Electronic Fuel Systems with Stanadyne DE10 Pump or CTM284—Level 1 Electronic Fuel Systems with Delphi/Lucas DP201 Pump for procedures to install fuel filters.

9. Install fuel supply pump (C) using appropriate procedure:

   - Mechanical fuel system with Delphi/Lucas or Stanadyne fuel injection pump. See INSTALL FUEL SUPPLY PUMP in Section 02, Group 090 of CTM207—Mechanical Fuel Systems.
   - Denso fuel supply pump on mechanical fuel system. See INSTALL FUEL SUPPLY PUMP in Section 02, Group 090 of CTM207—Mechanical Fuel Systems.
   - Motorpal fuel supply pump on mechanical fuel system. See INSTALL FUEL SUPPLY PUMP in Section 02, Group 090 of CTM207—Mechanical Fuel Systems.
   - Electronic Fuel Systems with Stanadyne DE10 Pump. See INSTALL FUEL SUPPLY PUMP in Section 02, Group 090 of CTM331—Level 12 Electronic Fuel Systems with Stanadyne DE10 Pump.

10. Install alternator if removed. (See REMOVE AND INSTALL ALTERNATOR in Group 100.)

11. If engine oil was drained from crankcase, install new oil filter and fill engine with clean oil of correct grade and viscosity. (See Section 01, Group 002.)



RG7745A –UN–07NOV97

Fuel Filters

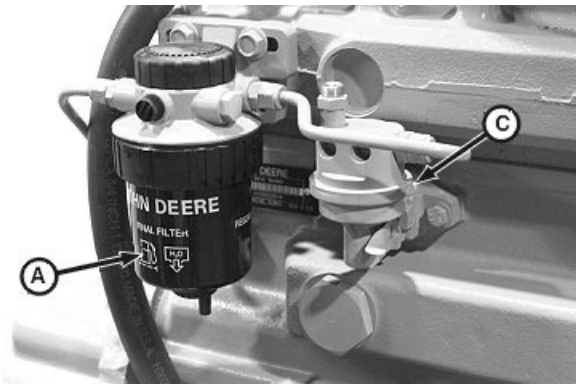

RG10379 –UN–19OCT99

Fuel Filters and Supply Pump

A—Final Fuel Filter
B—Primary Fuel Filter/Coolant Separator
C—Fuel Supply Pump

Continued on next page

RG,05,DT7339 –19–10DEC03–6/7

12. Fill cooling system with clean coolant. (See Section 01, Group 002.)

13. Perform engine break-in. (See PERFORM ENGINE BREAK-IN in Group 010.)

RG,05,DT7339 –19–10DEC03–7/7

General Information

NOTE: Engines with two-valve head design are covered in Group 020.

OUO1089,0000231 –19–10JUN02–1/1

Check and Adjust Valve Clearance

CAUTION: To prevent accidental starting of engine while performing valve adjustments, always disconnect NEGATIVE (—) battery terminal.

IMPORTANT: Valve clearance MUST BE checked and adjusted with engine COLD.

1. Remove rocker arm cover and crankcase ventilator tube.

IMPORTANT: Visually inspect contact surfaces of valve tips, bridges and rocker arm wear pads. Check all parts for excessive wear, breakage, or cracks. Replace parts that show visible damage.

Rocker arms that exhibit excessive valve clearance should be inspected more thoroughly to identify damaged parts.

Replace valves, seats, springs and retainers in pairs per cylinder if found damaged. Also replace bridge if any of these parts are replaced.

2. Remove plastic plugs or cover plate from engine timing/rotation hole (A) and timing pin hole (B).



Flywheel Housing Timing Holes

A—Timing/Rotation Hole
B—Timing Pin Hole

Continued on next page

OUO1089,0000208 –19–10DEC03–1/5

NOTE: Some engines are equipped with flywheel housings which do not allow use of an engine flywheel rotation tool. These engines with straight nose crankshafts may be rotated from front nose of engine, using JDG966 Crankshaft Front/Rear Rotation Adapter.

3. Using JDE83 or JDE81-1[1] Flywheel Turning Tool, rotate engine flywheel in running direction (clockwise viewed from front) until No. 1 cylinder is at TDC compression stroke. Insert JDG1571 or JDE81-4 Timing Pin in flywheel.

   If No. 1 cylinder rocker arms are loose, the engine is at No. 1 TDC compression.

   If No. 1 cylinder rocker arms are not loose, rotate engine one full revolution (360°) to No. 1 TDC compression.

[1]JDG820 (formerly JDE81-1) Flywheel Turning Tool may be used if JDE81-1 is not available, JDG820 (formerly JDE81-1) Flywheel Turning Tool MUST be used for 6.8L engines in 7400 and 7600 Tractors.

Continued on next page

4. With engine lock-pinned at TDC of No. 1 piston's compression stroke, check valve clearance to following specifications. (Use sequence for 4-cylinder or 6-cylinder engines as outlined on next page.)

   If valves need adjusting, loosen the jam nut (A) on rocker arm adjusting screw. Turn adjusting screw until feeler gauge slips with a slight drag. Hold the adjusting screw from turning with screwdriver and tighten jam nut to specifications. Recheck clearance again after tightening jam nut. Readjust clearance as necessary.

Specification

Intake Valve Clearance (Rocker Arm-to-Bridge) (Engine Cold)—Clearance	0.36 mm (0.014 in.)
Exhaust Valve Clearance (Rocker Arm-to-Bridge) (Engine Cold)—Clearance	0.46 mm (0.018 in.)
Rocker Arm Adjusting Screw Jam Nut—Torque	27 N•m (20 lb-ft)

5. Install rocker arm cover and crankcase ventilator tube.

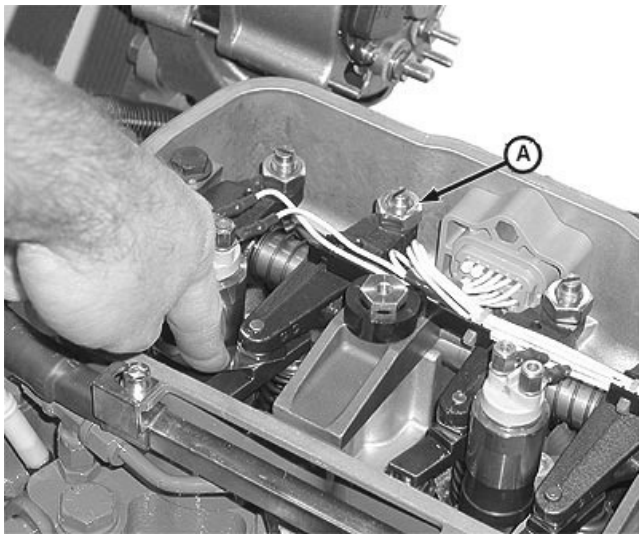

RG12169 –UN–03JUL02

Adjusting Valves

A—Adjusting Screw Jam Nut

OUO1089,0000208 –19–10DEC03–3/5

4-Cylinder Engine:

NOTE: Firing order is 1-3-4-2.

1. Using JDG1571 or JDE81-4 Timing Pin, lock No. 1 piston at TDC compression stroke (B).
2. Adjust valve clearance on No. 1 and 3 exhaust valves and No. 1 and 2 intake valves.
3. Turn crankshaft 360°. Lock No. 4 piston at TDC compression stroke (C).
4. Adjust valve clearance on No. 2 and 4 exhaust valves and No. 3 and 4 intake valves.

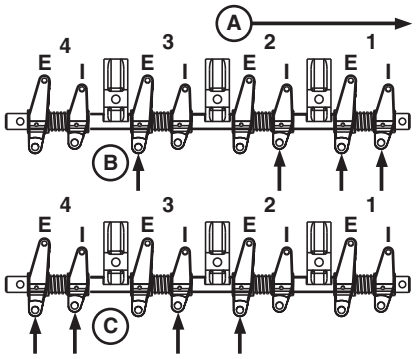

RG12357 –UN–29MAY02

4-Cylinder Valve Adjustment

A—Front of Engine
B—No. 1 Piston TDC Compression
C—No. 4 Piston TDC Compression
E—Exhaust Valve
I—Intake Valve

Continued on next page

OUO1089,0000208 –19–10DEC03–4/5

6-Cylinder Engine:

NOTE: Firing order is 1-5-3-6-2-4.

1. Using JDG1571 or JDE81-4 Timing Pin, lock No. 1 piston at TDC compression stroke (B).
2. Adjust valve clearance on No. 1, 3 and 5 exhaust valves and No. 1, 2, and 4 intake valves.
3. Turn crankshaft 360°. Lock No. 6 piston at TDC compression stroke (C).
4. Adjust valve clearance on No. 2, 4 and 6 exhaust valves and No. 3, 5, and 6 intake valves.

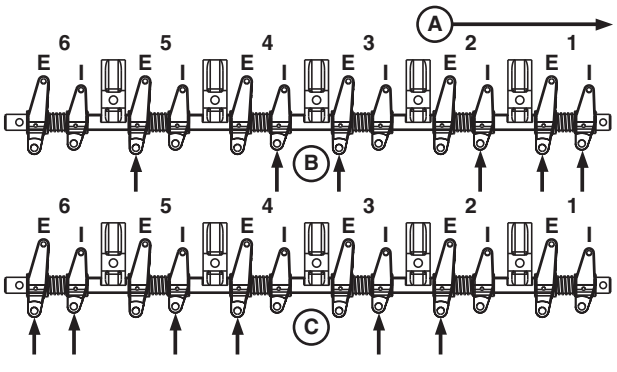

6-Cylinder Valve Adjustment

A—Front of Engine
B—No. 1 Piston TDC Compression
C—No. 6 Piston TDC Compression
E—Exhaust Valve
I—Intake Valve

OUO1089,0000208 –19–10DEC03–5/5

Measure Valve Lift

IMPORTANT: For a more accurate measurement, measure valve lift at 0.00 mm (0.00 in.) rocker arm-to-valve tip clearance and with engine COLD.

NOTE: Measuring valve lift provides an indication of wear on camshaft lobes and camshaft followers or push rods.

1. Remove rocker arm cover.
2. Using JDE81-1 or JDE83 Flywheel Turning Tool and JDG1571 or JDE81-4 Timing Pin inserted in flywheel, lock No. 1 piston at TDC compression stroke.
3. Set rocker arm-to-valve tip clearance to 0.00 mm (0.00 in.) for:
   - No. 1 and 3 exhaust and No. 1 and 2 intake valves on 4-cylinder engines.
   - No. 1, 3, and 5 exhaust and No. 1, 2, and 4 intake valves on 6-cylinder engines.
4. Place dial indicator tip on top of valve bridge. Preload indicator tip and set dial at 0.0 mm (0.0 in.).
5. Remove timing pin from flywheel and manually rotate engine one full revolution (360°) in running direction using appropriate flywheel turning tool.
6. Observe dial indicator reading as valve is moved to full open. Record maximum reading and compare with specifications given below.

Specification	
Intake Valves—Lift	9.03—9.43 mm (0.356—0.371 in.)
Wear Limit	8.70 mm (0.343 in.)
Exhaust Valves—Lift	9.32—9.72 mm (0.367—0.383 in.)
Wear Limit	9.00 mm (0.354 in.)

7. Follow same procedure for all remaining valves and record readings.

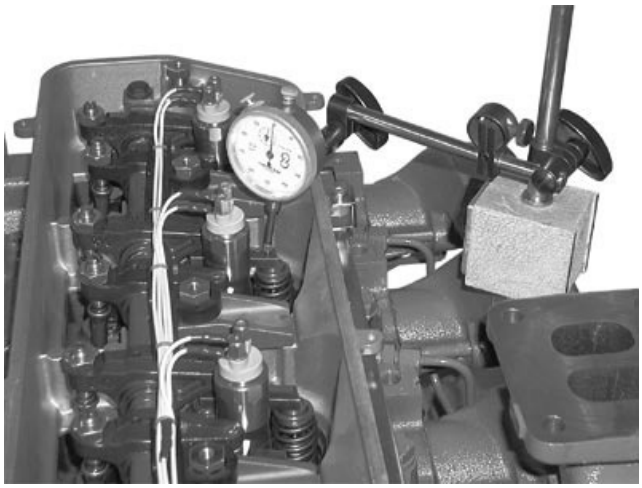

RG12165A –UN–03JUL02

Measuring Valve Lift

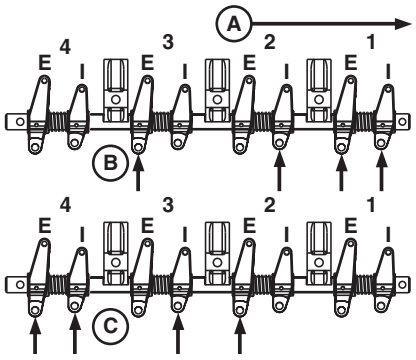

RG12357 –UN–29MAY02

4-Cylinder Engine

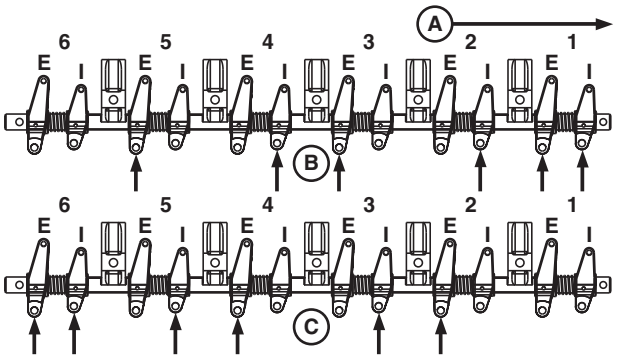

RG12170 –UN–21MAY02

6-Cylinder Engine

A—Front of Engine
B—No. 1 Piston TDC Compression
C—No. 4 Piston (4-Cylinder Engine) or No. 6 Piston (6-Cylinder Engine) TDC Compression
E—Exhaust Valve
I—Intake Valve

Continued on next page

If valve lift on all valves is within specifications, adjust valve lash to specified clearance. (See CHECK AND ADJUST VALVE CLEARANCE earlier in this group.)

If valve lift on one or more valves is not within specification, remove and inspect entire valve train and camshaft.

8. Rotate engine one full revolution (360°). Lock engine at:

   - TDC No. 4 compression stroke for 4-cylinder engines.
   - TDC No. 6 compression stroke for 6-cylinder engines.

9. Set rocker arm-to-valve tip clearance to 0.0 mm (0.0 in.) for:

   - No. 2 and 4 exhaust and No. 3 and 4 intake valves on 4-cylinder engines.
   - No. 2, 4, and 6 exhaust and No. 3, 5, and 6 intake valves on 6-cylinder engines.

10. Repeat steps 4—7.

OUO1089,0000209 –19–21MAY02–2/2

Do Not Open High-Pressure Fuel System

High-pressure fluid remaining in fuel lines can cause serious injury. Do not disconnect or attempt repair of fuel lines, sensors, or any other components between the high-pressure fuel pump and nozzles on engines with High Pressure Common Rail (HPCR) fuel system.

Only technicians familiar with this type of system can perform repairs. (See your John Deere dealer.)



TS1343 –UN–18MAR92

DX,WW,HPCR1 –19–07JAN03–1/1

Remove Cylinder Head

In some applications, it may be necessary to remove engine from machine to service cylinder head. Refer to your Machine Technical Manual for engine removal procedure.

CAUTION: After operating engine, allow exhaust system to cool before working on engine.

Do NOT drain coolant until the coolant temperature is below operating temperature. Remove radiator filler cap only when the cap is cool enough to touch with bare hands. Slowly loosen cap to first stop to relieve pressure before removing completely.

1. Drain engine oil and coolant.
2. Remove air intake line and intake line between turbocharger and intake manifold.
3. Remove exhaust line from turbocharger.

OUO1089,000020A –19–10DEC03–1/13

NOTE: Turbocharger may be removed from engine while assembled to exhaust manifold, if desired.

4. On turbocharged engines, disconnect turbocharger oil inlet line (A) and oil drain line (B). Remove turbocharger from exhaust manifold. (See REMOVE TURBOCHARGER in Group 080.)

A—Oil Inlet Line
B—Oil Drain Line

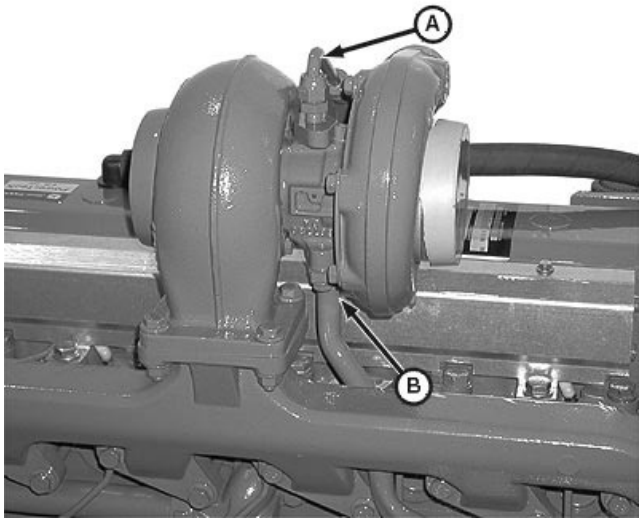

Turbocharger

Continued on next page

OUO1089,000020A –19–10DEC03–2/13

5. Remove exhaust manifold (A).
6. Remove turbocharger oil drain line (B) and heat shield (C) if equipped.
7. Remove sleeve (D) from each exhaust port.
8. Remove thermostat housing (E), coolant manifold and side port. (See REMOVE AND INSTALL COOLANT MANIFOLD, THERMOSTATS AND SIDE PORT (FOUR-VALVE HEAD) in Group 070.)

A—Exhaust Manifold
B—Turbocharger Oil Drain Line
C—Heat Shield
D—Sleeve
E—Thermostat Housing

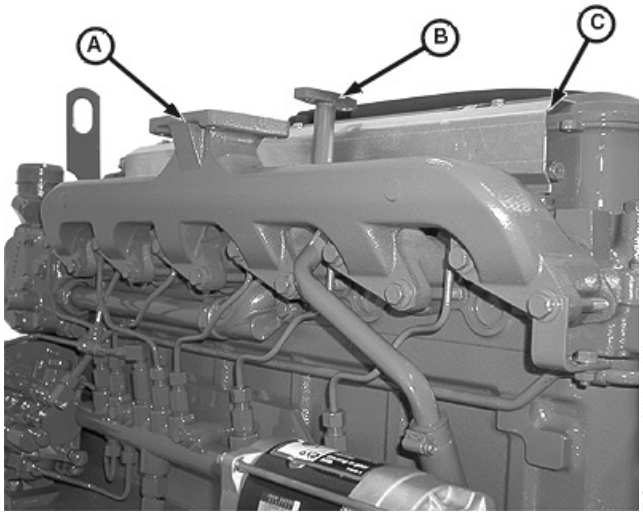

Exhaust Manifold, Turbocharger Return Oil Line and Heat Shield Removal

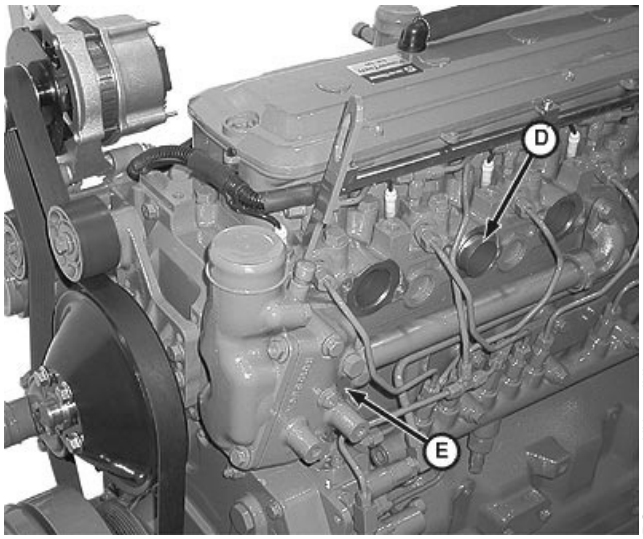

Exhaust Port Sleeve, Coolant Tube and Thermostat Housing Removal

Continued on next page

OUO1089,000020A –19–10DEC03–3/13

9. Loosen cap screws (C), remove fan belt (B) and remove cap screws (C) with pulley.

10. Remove bracket (A) from engine.

11. Remove plate (D) from engine.

A—Bracket
B—Fan Belt
C—Cap Screws (4 used)
D—Plate

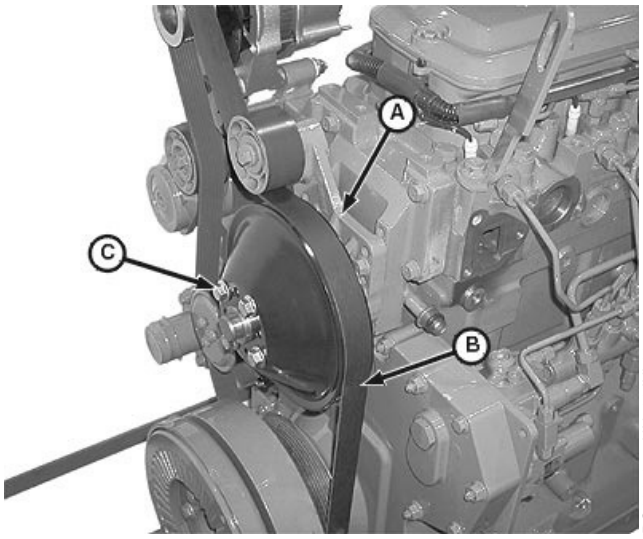

RG12172 –UN–03JUL02

Fan Belt and Pulley Removal

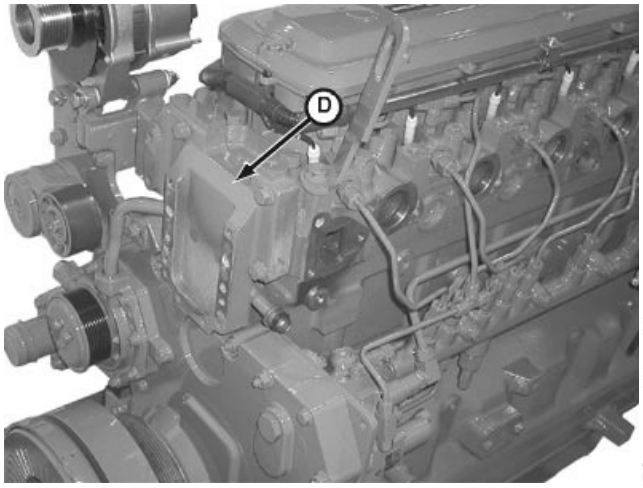

RG12173 –UN–03JUL02

Fan Pulley Mounting Plate Removal

Continued on next page

OUO1089,000020A –19–10DEC03–4/13

12. Remove fuel filters (A) and (B) and mounting brackets as required.

13. Remove fuel supply pump (C). Inspect face of fuel supply pump lever for wear. If worn flat or concave, replace fuel supply pump.

14. Remove fuel delivery lines (D).

15. Remove glow plug harness with rail (H) from engine.

16. Disconnect fuel leak-off line nut (G) and tee fitting nut (F) at each tee fitting.

17. Remove fuel leak-off line assembly (E) from engine.

18. Remove alternator, if desired. (See REMOVE AND INSTALL ALTERNATOR in Group 100.)

A—Final Fuel Filter
B—Primary Fuel Filter/Water Separator
C—Fuel Supply Pump
D—Fuel Delivery Line
E—Fuel Leak-Off Line Assembly
F—Tee Fitting Nut
G—Fuel Leak-Off Line Nut
H—Glow Plug Harness Rail

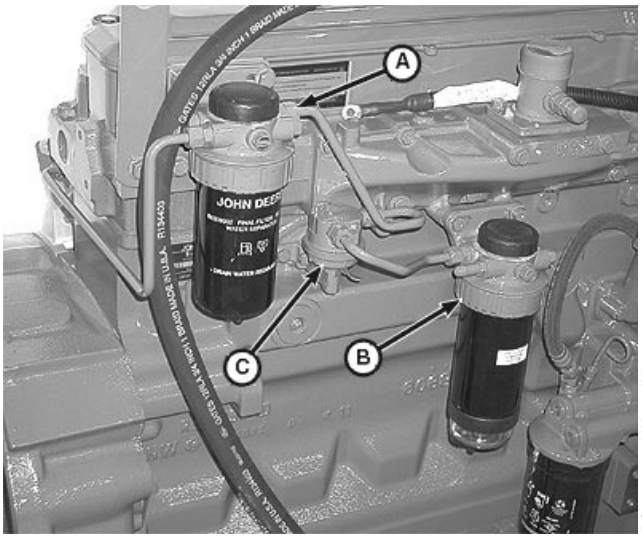

Fuel Filters

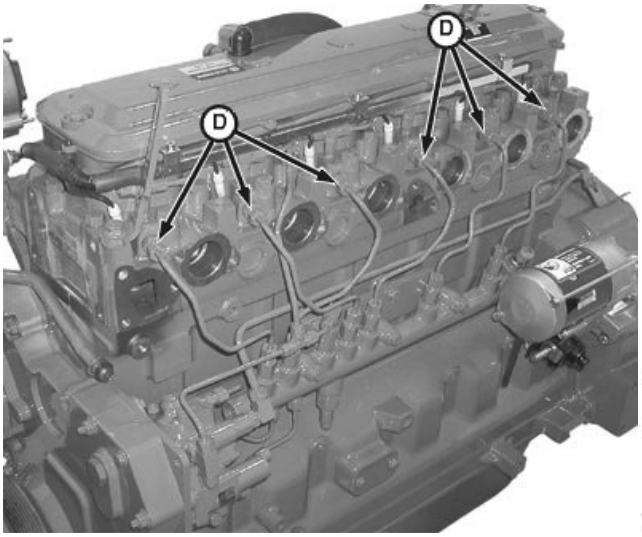

Fuel Lines

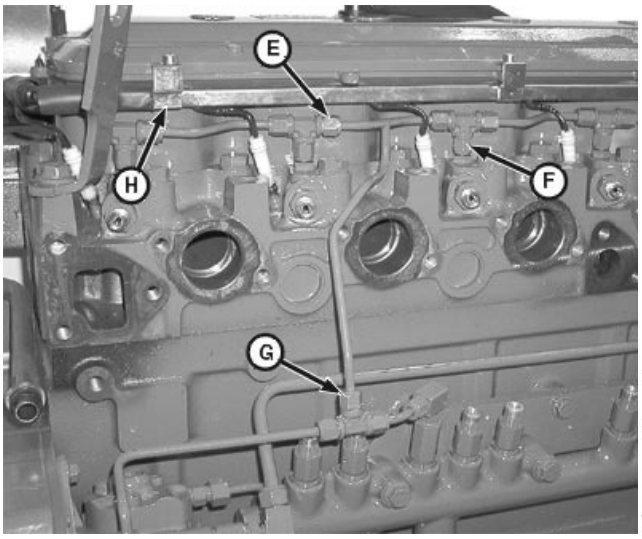

Fuel Return Line

Continued on next page

19. Remove button plugs (B) from rocker arm cover.

20. Remove cap screws with O-rings (A) and rocker arm cover.

A—Cap Screw with O-ring
B—Button Plug

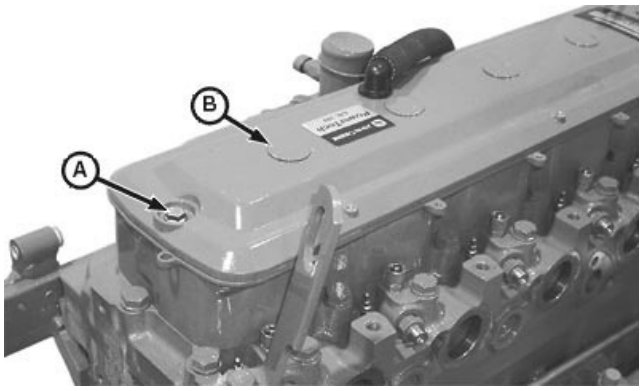

Rocker Arm Cover

Continued on next page

OUO1089,000020A –19–10DEC03–6/13

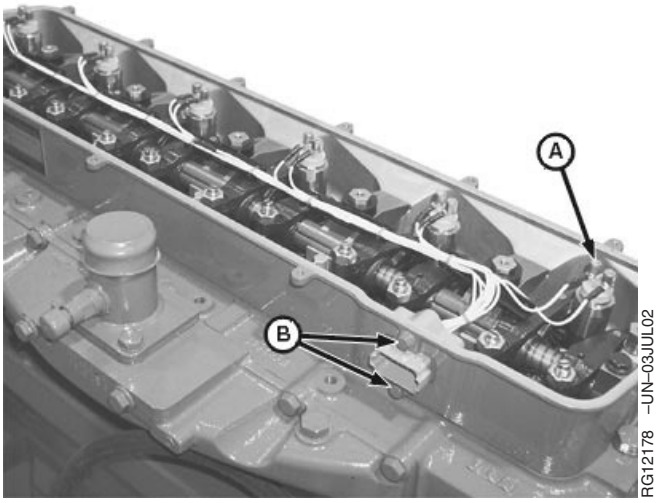

Remove Fuel Injection Nozzles Harness

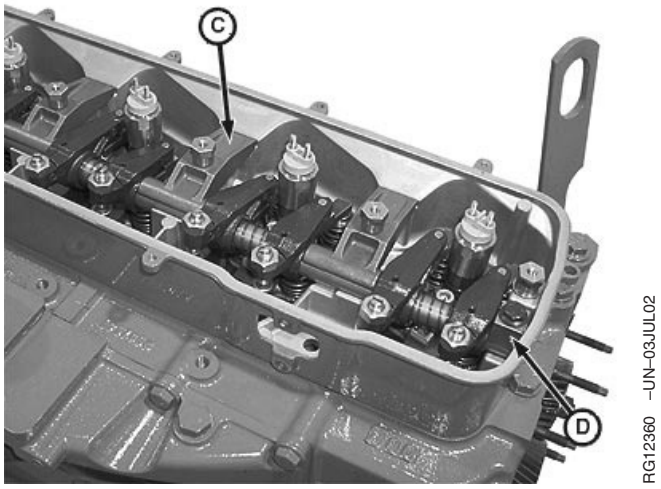

Rocker Arm Shaft Removal

21. Remove two cap screws (B) and nut (A) on all fuel injectors. Remove fuel injection nozzle harness.

NOTE: Loosen all rocker arm adjusting screws prior to removing assembly.

To aid in rocker arm shaft assembly removal, use rocker arm holders (E) as shown.

22. Remove both end clamps (D), clamps (C) and rocker arm shaft assembly.

A—Nut
B—Cap Screw (2 used)
C—Clamp
D—End Clamp
E—Rocker Arm Holder
F—Diameter 3 mm (0.12 in.)
G—Width 50 mm (1.97 in.)
H—Leg Length 15 mm (0.59 in.)

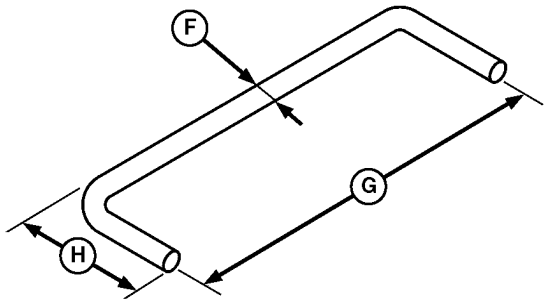

Rocker Arm Holder

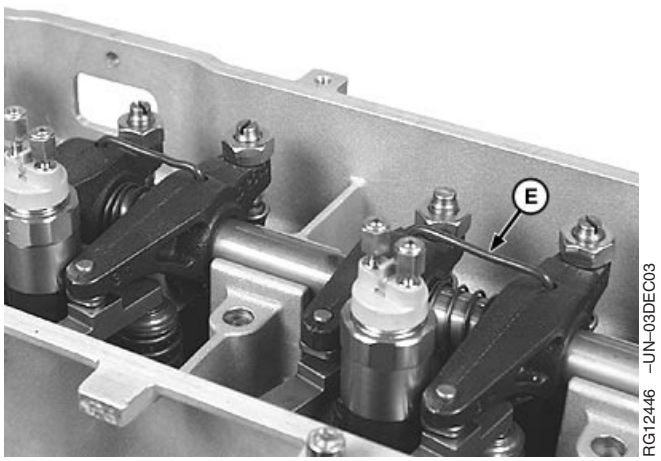

Rocker Arm Holder Installation

Continued on next page

23. Remove all push rods (A) and identify for reassembly in the same location. Clean and inspect push rods.

24. Remove all bridges (B) and identify for reassembly in the same location.

A—Push Rod
B—Bridge

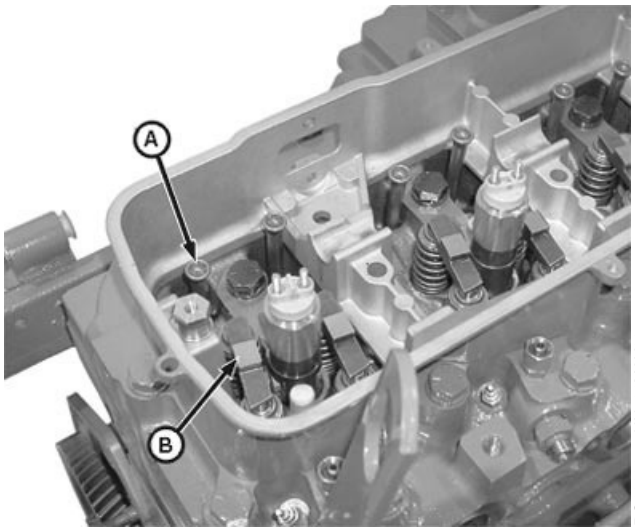

Remove Push Rods and Bridges

OUO1089,000020A –19–10DEC03–8/13

25. Remove screws (B) and rocker arm carrier (A).

A—Rocker Arm Carrier
B—Screw

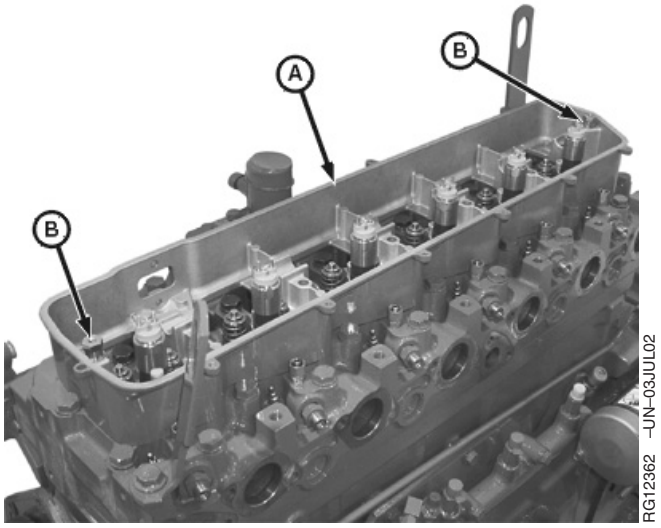

Rocker Arm Carrier Removal

Continued on next page

OUO1089,000020A –19–10DEC03–9/13

26. Remove glow plug (B), fitting (C) and screw (A) from each cylinder.

27. Remove fuel supply tube (D) using a magnet.

NOTE: Injector nozzle tip copper seal may remain in cylinder head. Remove seal from cylinder head.

Later engines have a longer clamp, insure that JDG1652 removal tool is properly seated in injector when removing.

28. Remove fuel injector with clamp using JDG1652 Injector Nozzle Removal Tool (E).

A—Screw
B—Glow Plug
C—Fitting
D—Fuel Supply Tube
E—JDG1652 Injector Nozzle Removal Tool

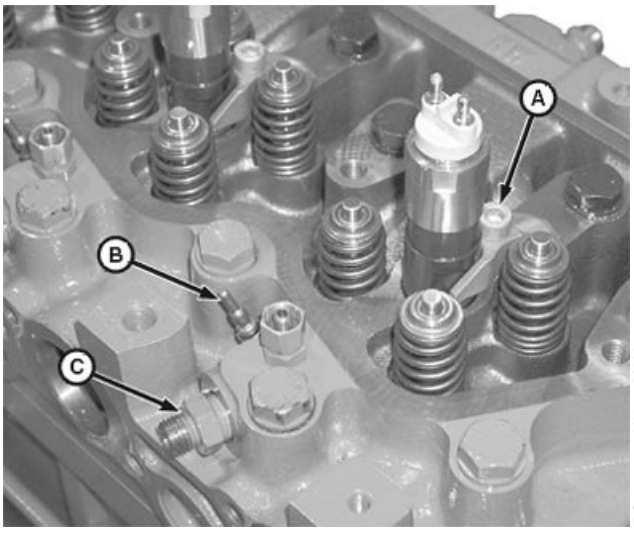

RG12363 –UN–31MAY02

Remove Glow Plugs, Fittings and Screws

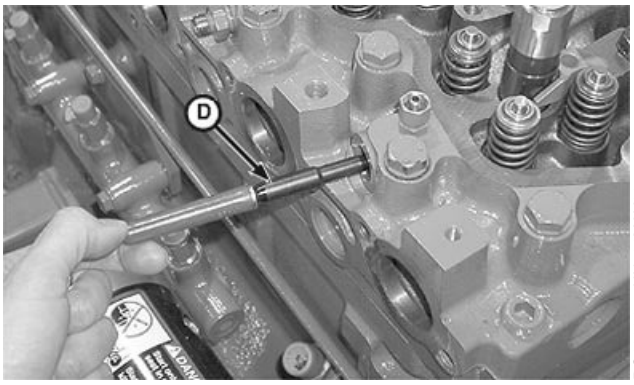

RG12364 –UN–31MAY02

Remove Fuel Supply Tube

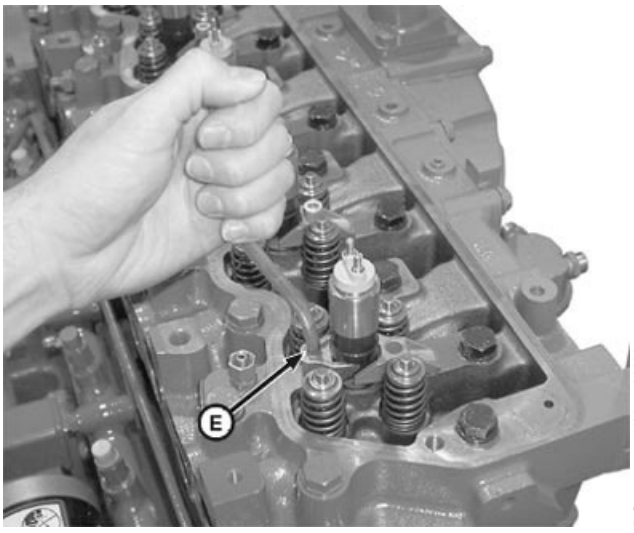

RG12365 –UN–31MAY02

Remove Fuel Injector and Clamp

Continued on next page

29. If a cylinder head gasket failure has occurred, check and record torque on each cylinder head cap screw before removing.

    To check cylinder head cap screw torque:

    a. Make a reference mark (in-line) on socket (A) and cylinder head surface (B).

    b. Loosen cap screw at least 1/2 turn.

    c. Retighten cap screw (using a torque wrench) until reference marks align. Record torque.

30. Remove all cylinder head cap screws and discard. Do not reuse cylinder head cap screws.

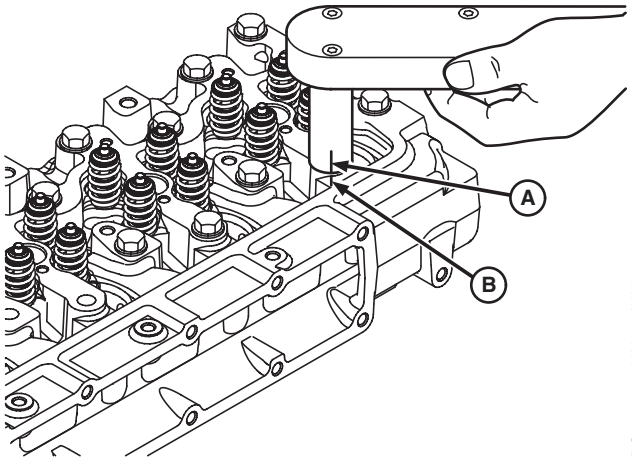

RG12375 –UN–11JUN02

Cylinder Head Cap Screws

A—Mark on Socket
B—Mark on Head Surface

OUO1089,000020A –19–10DEC03–11/13

IMPORTANT: DO NOT use screwdrivers or pry bars between cylinder block and head to loosen head gasket seal. Screwdrivers or pry bars can damage cylinder head and block gasket surfaces.

31. Lift cylinder head (A) from block using JDG23 Engine Lifting Sling, or heavy-duty chains, and a hoist. If cylinder head sticks, use a soft hammer to tap cylinder head.

A—Cylinder Head

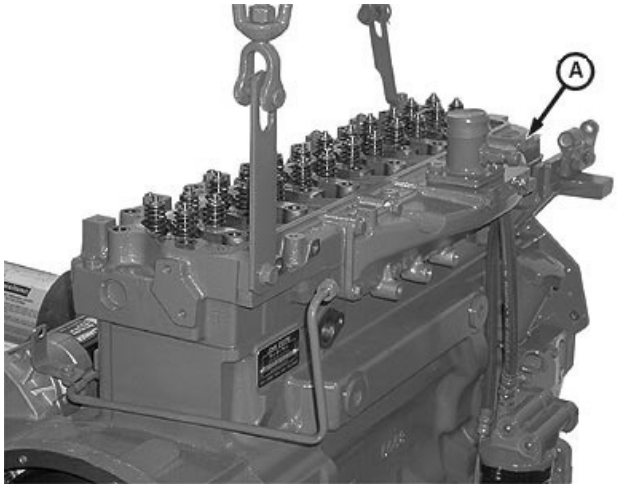

RG12369 –UN–03JUL02

Cylinder Head

Continued on next page

OUO1089,000020A –19–10DEC03–12/13

32. Remove cylinder head gasket (A). Inspect for possible oil, coolant, or combustion chamber leaks. Also, check for evidence of incorrect head gasket being used.

NOTE: Do not rotate crankshaft with cylinder head removed unless cylinder liners are secured with cap screws and large flat washers. (See CHECK CYLINDER LINER STANDOUT (HEIGHT ABOVE BLOCK) Four-Valve Head, later in this group.)

A—Head Gasket

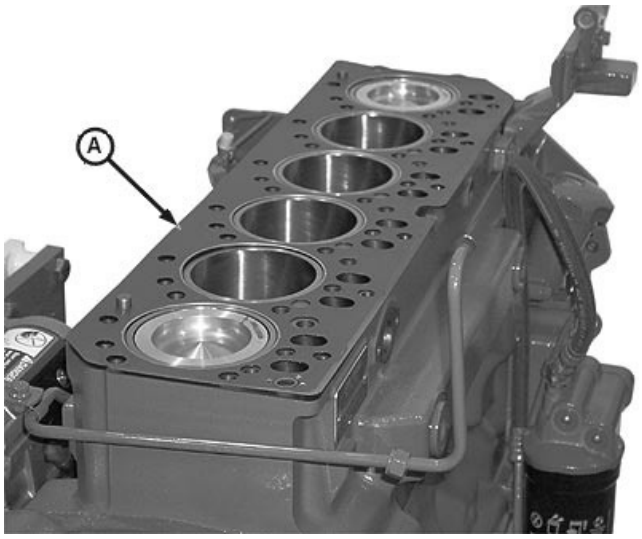

RG12370 –UN–03JUL02

Cylinder Head Gasket

OUO1089,000020A –19–10DEC03–13/13

Inspect and Measure Valve Bridges

1. Clean valve bridges and inspect for damage.
2. Measure valve bridge pockets (A) and make sure pocket-to-pocket variation is within specifications.

Specification	
Valve Bridge—Pocket-to-Pocket Variation (Maximum)	0.1 mm (0.004 in.)

A—Valve Bridge Pockets



RG12405A –UN–03JUL02

Inspect and Measure Bridges

OUO1089,0000237 –19–13JUN02–1/1

Disassemble and Inspect Rocker Arm Shaft Assembly

NOTE: Note location of parts as rocker arms are disassembled, to aid in assembly.

Removal of plugs (A) is only necessary when cleaning rocker arm shaft.

1. Remove plug (A) from both ends of rocker arm shaft.
2. Disassemble and inspect all parts for wear or damage. Replace any parts that are damaged or not within specifications.

Rocker Arm Assembly—Specification

46 mm (1.81 in.) Compressed Height—Spring Tension	18—27 N (4—6 lb-force)
Spring—Compressed Height	46 mm @ 18—27 N (1.81 in. @ 4—6 lb-force)
Shaft—OD	19.962—20.038 mm (0.786—0.789 in.)
Wear Limit	19.91 mm (0.784 in.)
Rocker Arm Bore—ID	20.065—20.115 mm (0.790—0.792 in.)
Wear Limit	20.16 mm (0.794 in.)

A—End Plug

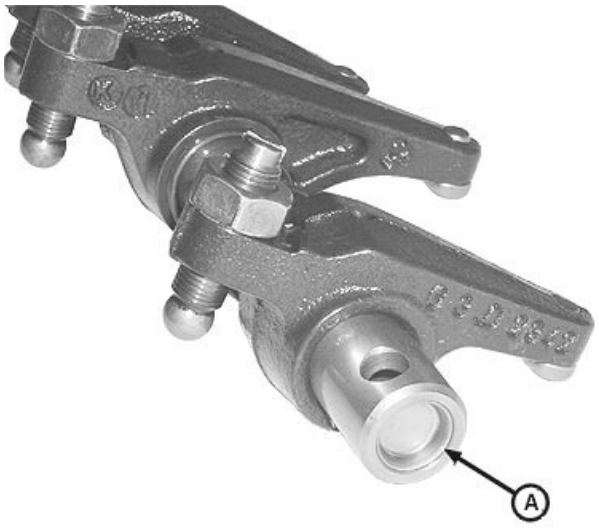

RG12372A –UN–05JUN02

Rocker Arm Shaft Plugs



RG7418 –UN–23NOV97

Rocker Arm Shaft OD



RG12373A –UN–05JUN02

Rocker Arm Bore ID

OUO1089,000020B –19–04JUN02–1/1

Assemble Rocker Arm Assembly

IMPORTANT: Clean excess LOCTITE® 242 immediately from rocker arm shaft to prevent binding with rocker arms.

1. Apply LOCTITE 277 high strength, threadlock to outer edge of plugs (A) and install plugs securely in both ends of rocker arm shaft.
2. Lubricate shaft OD and rocker arm bores with clean engine oil.
3. Assemble springs and rocker arms onto shaft in the same location as removed.

A—End Plug

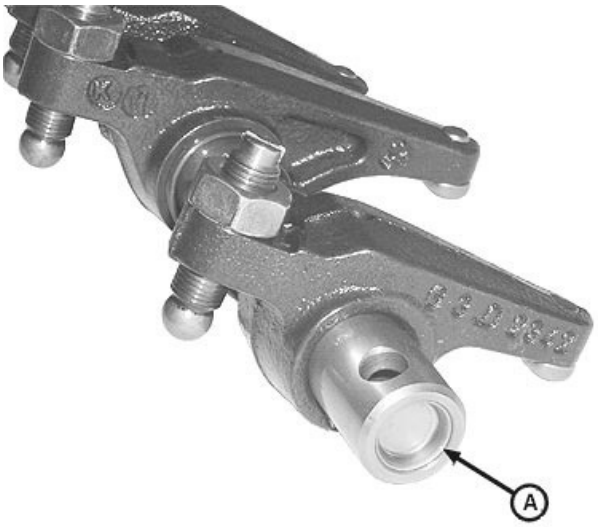

RG12372A –UN–05JUN02

Rocker Arm Shaft Plugs

LOCTITE is a trademark of Loctite Corp.

OUO1089,000020C –19–04JUN02–1/1

Inspect, Measure, and Install Fuel Supply Pump Push Rod

1. Remove and clean push rod (A). Label end(s) for reassembly in same orientation.

A—Push Rod



RG7447 –UN–04NOV97

Fuel Supply Pump Push Rod

Continued on next page

OUO1089,0000212 –19–06JUN02–1/4

2. Measure push rod OD (B). If OD is less than specification, install a new push rod.

Specification

Fuel Supply Pump Push Rod—
OD ..... 9.891—9.917 mm
(0.3894—0.3904 in.)

B—Push Rod OD

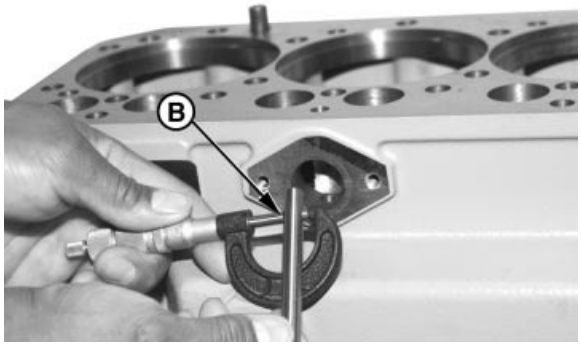

RG7496A –UN–04NOV97

Push Rod OD Wear

OUO1089,0000212 –19–06JUN02–2/4

3. Check crown on push rod ends. If flat or concave, replace push rod and check camshaft lobe for wear. (See MEASURE CAMSHAFT LOBE HEIGHT in Group 050.)

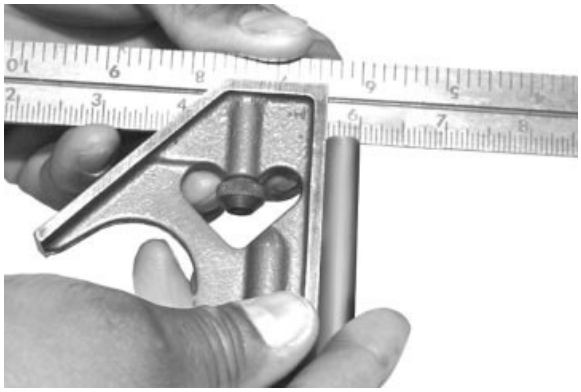

RG8113 –UN–23NOV97

Push Rod and Crown Wear

Continued on next page

OUO1089,0000212 –19–06JUN02–3/4

4. Measure push rod bore ID (C) in block.

Specification

Fuel Supply Pump Push Rod
Bore in Block—ID ..... 10.00—10.05 mm
(0.3937—0.3957 in.)

Repair or replace block as necessary.

5. Lubricate push rod with clean engine oil. Apply a small amount of TY6333 High Temperature Grease to both ends of the rod and install in bore with same end orientation as removed.

C—Bore ID

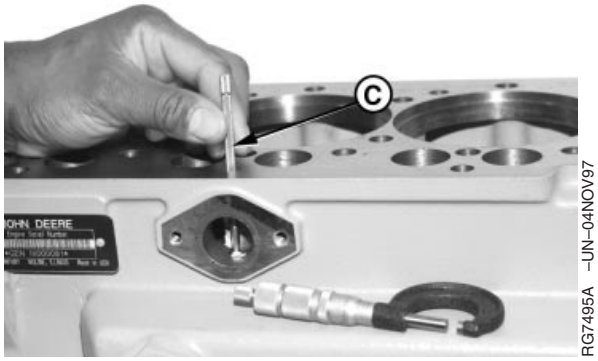

RG7495A –UN–04NOV97

Push Rod Bore in Block Wear

OUO1089,0000212 –19–06JUN02–4/4

Inspect, Measure, and Assemble Camshaft Followers

1. Remove and clean camshaft followers. Label for reassembly in same location.



RG7421 –UN–23NOV97

Camshaft Followers

Continued on next page

OUO1089,0000213 –19–06JUN02–1/3

2. Measure camshaft follower OD. If camshaft follower OD is less than specified, install a new follower.

Specification

Camshaft Follower—OD	31.61—31.64 mm (1.245—1.246 in.)



RG7422 –UN–23NOV97

Camshaft Follower Wear

OUO1089,0000213 –19–06JUN02–2/3

3. Check crown on follower face. If flat or concave, replace follower and check camshaft lobes for wear. (See VISUALLY INSPECT CAMSHAFT in Group 050.)

4. Measure camshaft follower bore in block and determine if clearance is within specification. (See MEASURE CAMSHAFT FOLLOWER MACHINED BORE IN BLOCK in Group 030.)

5. Lubricate camshaft followers in clean engine oil and install in same bore from which removed.

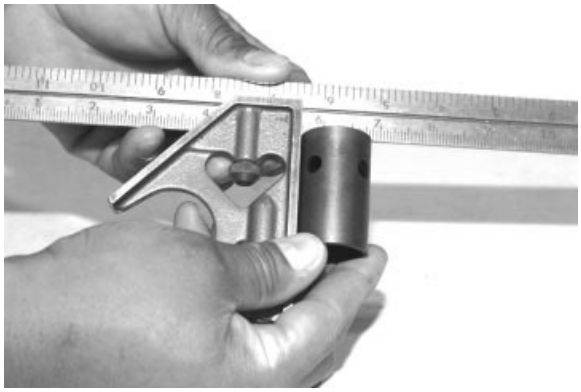

RG7423 –UN–23NOV97

Camshaft Follower and Crown Wear

OUO1089,0000213 –19–06JUN02–3/3

Measure Valve Recess in Cylinder Head

1. Measure and record valve recess (A) using a depth micrometer, magnetic base dial indicator or a dial indicator with JDG451 Height Gauge (B). Measurements must be made a maximum of 3.0 mm (0.12 in.) from edge of valve head.

2. Compare measurements between both intake valves for each cylinder and make sure difference is less than maximum variation allowed. Repeat step for both exhaust valves at each cylinder.

3. If there is uneven valve wear per cylinder, check valve bridge pocket-to-pocket variation. (See INSPECT AND MEASURE VALVE BRIDGES earlier in this group.)

Specification	
Intake Valves—Recess in Cylinder Head	0.77—1.27 mm (0.030—0.050 in.)
Wear Limit	1.77 mm (0.070 in.)
Exhaust Valve—Recess in Cylinder Head	0.81—1.31 mm (0.032—0.052 in.)
Wear Limit	1.81 mm (0.071 in.)
Intake and Exhaust Valves—Maximum Variation for a Pair of Valves (Per Cylinder)	0.3 mm (0.012 in.)

IMPORTANT: Intake valves, exhaust valves, valve seat inserts, springs and retainers must be replaced in pairs to maintain proper valve bridge alignment. Also, replace bridge if any of these parts are replaced.

Install new valves and/or valve seat inserts, as necessary, to obtain proper valve recess.

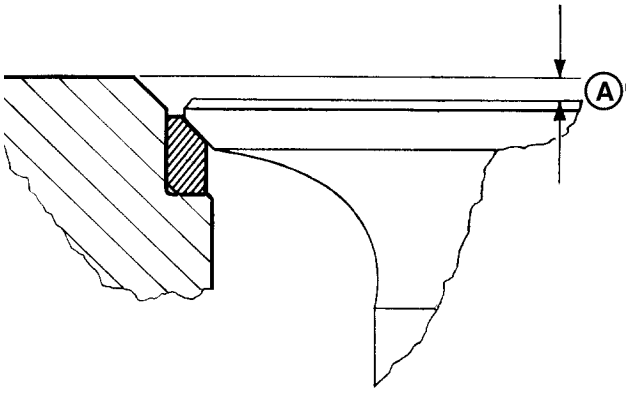

Valve Recess Measurement

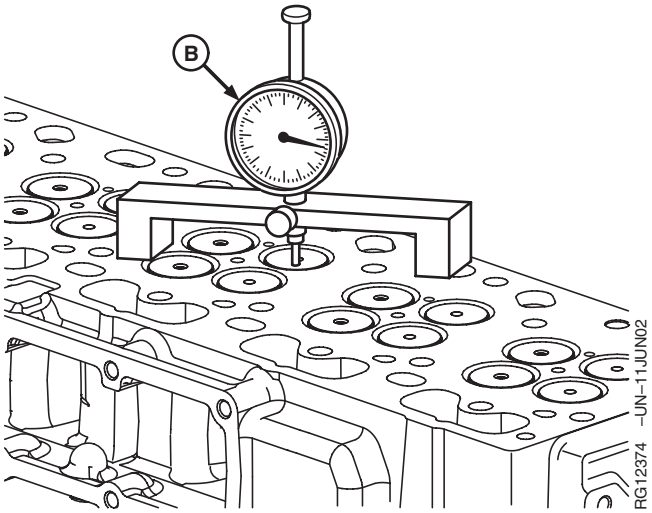

Measuring Valve Recess

A—Valve Recess
B—Dial Indicator

OUO1089,000020D –19–28JAN04–1/1

Preliminary Cylinder Head and Valve Checks

Make preliminary inspection of cylinder head and valve assembly during disassembly.

Look for the following conditions:

Sticking Valves:

- Carbon deposits on valve stem.
- Worn valve guides.
- Scored valve stems.
- Warped valve stems.
- Misaligned or broken valve springs.
- Worn or distorted valve seats.
- Insufficient lubrication.

Warped, Worn, or Distorted Valve Guides:

- Lack of lubrication.
- Cylinder head distortion.
- Excessive heat.
- Unevenly tightened cylinder head cap screws.

Distorted Cylinder Head and Gasket Leakage:

- Loss of cylinder head cap screw torque.
- Broken cylinder head cap screw(s).
- Overheating from low coolant level operation.
- Insufficient liner standout.
- Coolant leakage into cylinder causing hydraulic failure of gasket.
- Leaking aftercooler.
- Cracked cylinder head.
- Cracked cylinder liner.
- Damaged or incorrect gasket.
- Overpowering or overfueling.
- Damaged cylinder head or block surfaces.
- Improper surface finish on cylinder head.
- Improperly tightened cylinder head cap screws.
- Faulty gasket installation (misaligned).

Worn or Broken Valve Seats:

- Misaligned valves.
- Distorted cylinder head.
- Carbon deposits on seats due to incomplete combustion.
- Valve spring tension too weak.
- Excessive heat.
- Improper valve clearance.
- Improper valve timing.
- Incorrect valve or seat installed.

Burned, Pitted, Worn, or Broken Valves:

- Worn or distorted valve seats.
- Loose valve seats.
- Worn valve guides.
- Insufficient cooling.
- Cocked or broken valve springs.
- Improper engine operation.
- Improper valve train timing.
- Faulty valve rotators.
- Warped or distorted valve stems.
- “Stretched” valves due to excessive spring tension.
- Warped cylinder head.
- Bent push rods.
- Carbon build-up on valve seats.
- Rocker arm failure.
- Incorrect valve or seat installed.
- Incorrect piston-to-valve clearance.

Improper Valve Clearance:

- Inefficient use of fuel.
- Engine starts harder.
- Maximum engine power will not be achieved.
- Shorter service life of valve train.
- Greater chance for engine to overheat.

Excessive Recession:

- Worn valve guides.
- Bent valves.
- Debris passed through valve train.

Remove Valve Assembly

NOTE: Identify all parts for assembly in same location.

A small magnet may be used to aid removal of valve retainer locks.

02
021
24

1. Using JDE138 Valve Spring Compressor, compress valve springs far enough to remove retainer locks (A).
2. Release spring tension and remove valve retainer (B) and valve spring (C).
3. Remove valves from cylinder head.
4. Remove valve stem seal (D) from valve guide towers.

A—Retainer Locks
B—Valve Retainer
C—Valve Spring
D—Valve Stem Seal

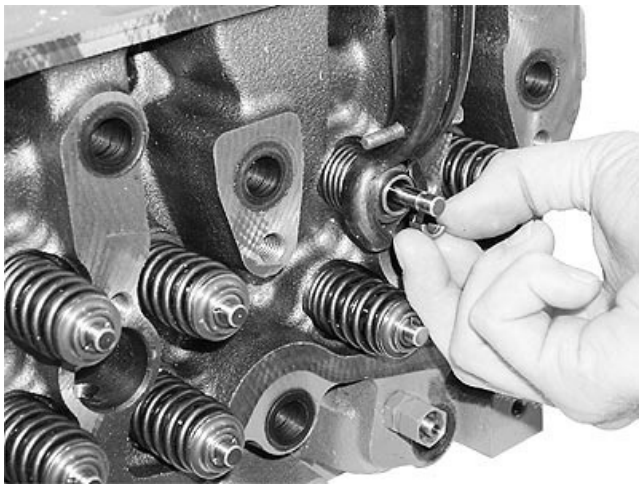

RG12378A –UN–07JUN02

Valve Spring Removal Tool

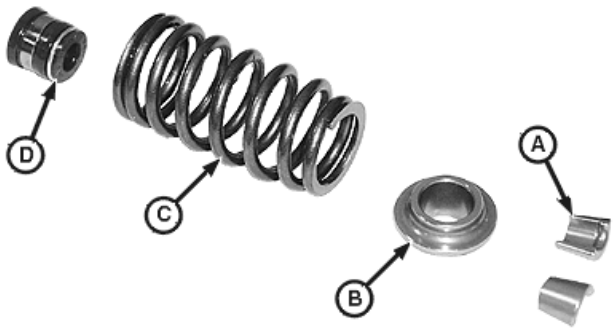

RG12379A –UN–07JUN02

Valve Spring and Components

OUO1089,0000210 –19–05JUN02–1/1

Inspect and Measure Valve Springs

IMPORTANT: Intake valves, exhaust valves, valve seat inserts, springs and retainers must be replaced in pairs to maintain proper valve bridge alignment. Also, replace bridge if any of these parts are replaced.

1. Inspect valve springs for alignment, wear, and damage.
2. Using D01168AA Spring Compression Tester, check valve spring tension. Compressed height must be within specification given below.

Valve Springs—Specification

Spring Free Length 0 N (0 lb-force)[1]—Height	46.15 mm (1.82 in.)
Spring Compressed 166 N (37.32 lb-force)—Height	37.21 mm (1.46 in.)
Spring Compressed 356 N (80.03 lb-force)—Height	27.01 mm (1.06 in.)



RG2732 –UN–04DEC97

Valve Spring



RG7427 –UN–21MAY98

Valve Spring Compression Tester

[1]Free length may vary slightly between valve springs.

OUO1089,000020F –19–04JUN02–1/1

Clean Valves

1. Hold each valve firmly against a soft wire wheel on a bench grinder.

IMPORTANT: DO NOT use a wire wheel on plated portion of valve stem. Polish the valve stem with steel wool or crocus cloth to remove any scratch marks left by the wire brush.

2. Make sure all carbon is removed from valve head, face and unplated portion of stem.

OUO1089,0000215 –19–06JUN02–1/1

Inspect and Measure Valves

IMPORTANT: Intake valves, exhaust valves, valve seat inserts, springs and retainers must be replaced in pairs to maintain proper valve bridge alignment. Also, replace bridge if any of these parts are replaced.

02
021
26

1. Clean and inspect valves, valve stems, stem tips, and retainer lock groove (A). Replace worn or damaged valves in pairs.

Specification	
Intake Valve Head—OD	36.87—37.13 mm (1.452—1.462 in.)
Exhaust Valve Head—OD	35.87—36.13 mm (1.412—1.422 in.)

NOTE: Intake valve has a larger head OD and is also identified with a raised letter "I" on valve head.

Exhaust valve head is non-magnetic.

A—Retainer Lock Groove
B—Raised Letter "I"

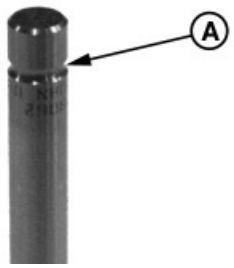

RG7429 –UN–03NOV97

Valve Stem



RG12380A –UN–07JUN02

Intake/Exhaust Valve Identification

OUO1089,0000216 –19–10DEC03–1/3

2. Measure valve stem OD. Record measurements and compare with valve guide ID. (See MEASURE VALVE GUIDES later in this group.)

Specification	
Intake Valve Stem—OD	6.987—7.013 mm (0.2750—0.2761 in.)
Exhaust Valve Stem—OD	6.984—7.000 mm (0.2749—0.2756 in.)



RG7430 –UN–23NOV97

Valve Stem Measurement

Continued on next page

OUO1089,0000216 –19–10DEC03–2/3

3. Using a valve inspection center, determine if valves are out of round, bent, or warped.

Specification	
Valve Face—Maximum Runout (Intake and Exhaust)	0.038 mm (0.0015 in.)

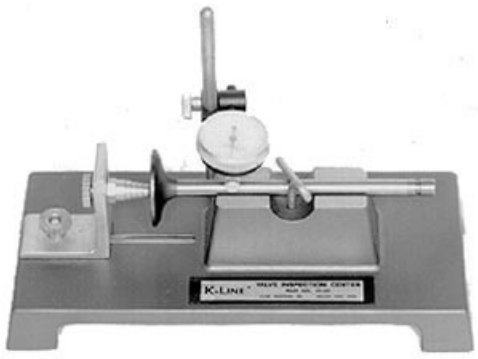

RG4234 –UN–05DEC97

Valve Inspection Center

OUO1089,0000216 –19–10DEC03–3/3

Grind Valves

IMPORTANT: Intake valves, exhaust valves, valve seat inserts, springs and retainers must be replaced in pairs to maintain proper valve bridge alignment. Also, replace bridge if any of these parts are replaced.

Do not grind valves. If valve face is warped, pitted, burnt, worn or damaged, replace intake or exhaust valves in pairs.

OUO1089,000020E –19–04JUN02–1/1

Head Gasket Inspection and Repair Sequence

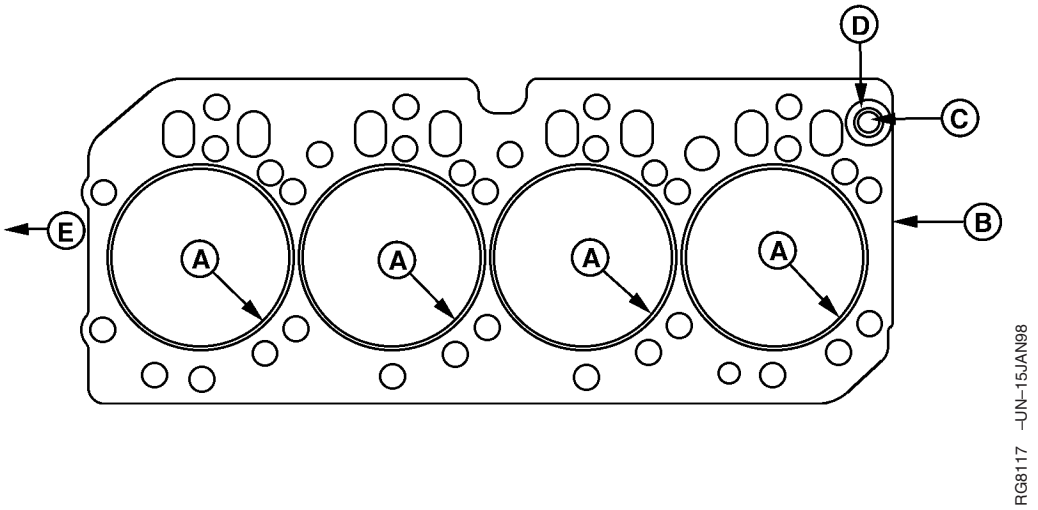

Head Gasket Inspection

A—Combustion Seals (Flanges) **B—Gasket Body** **C—Rocker Arm Oil Port** **D—Elastomer Beading Strip** **E—Front of Engine**

The following inspection procedures are recommended whenever a head gasket joint failure occurs, or when joint disassembly takes place.

1. Review historical data relating to machine operation, maintenance and repair, along with diagnostic observations. Note all areas requiring further inspection and analysis.

2. Remove rocker arm cover and check for presence of coolant in the oil.

3. Record head cap screw torques prior to removal. Upon removal, check cap screw length differences.

4. Remove cylinder head using appropriate lifting devices to prevent handling damage to head gasket. (See REMOVE CYLINDER HEAD earlier in this group.)

5. Observe surfaces of removed head gasket.

   Examine combustion seals (A) for the following:

   - Flange severed/expanded/cracked/deformed.
   - Adjacent body area burned/eroded.
   - Fire ring severed/displaced/missing.
   - Flange sealing pattern eccentric/contains voids.
   - Discoloration of flange and adjacent body areas.
   - Flange surfaces rough/abraded/channelled.

   Examine gasket body (B) for the following:

   - Combustion gas erosion paths or soot deposits originating at combustion seals.
   - Extreme discoloration/hardening/embrittlement in localized areas.
   - O-ring seal missing/damaged in port area (C).
   - Elastomer missing/damaged in port area (D).
   - Oil or coolant paths from port areas.
   - Localized areas of low compression.

6. Before cleaning components, inspect head, block, and liners for evidence of combustion gas and fluid leakage. Inspect cylinders and valve ports for unusual deposits.

7. Clean block, head, liners, and cap screws. (See procedures in this group and in Group 030.)

8. Proceed with the following dimensional checks and visual inspections:

Continued on next page

Cylinder Head (See procedures in this Group)

- Check surface flatness/finish.
- Inspect for surface damage.
- Check cylinder head thickness, if resurfacing.

Cylinder Block and Liners (Assembled and Clamped) (See Group 030)

- Check liner standout at four places on each liner.
- Check liner standout difference between cylinders.

Cylinder Block (See Group 030)

- Check surface flatness/finish.
- Inspect for surface damage.
- Check liner counterbore depth (if liner is removed).
- Check top deck to crankshaft centerline dimension.
- Inspect cap screw bosses; must be clean/intact.

Cylinder Liner (See Group 030)

- Check liner flange flatness/finish.
- Check liner flange thickness (if liner is removed).
- Inspect flange for damage.

Cylinder Head Cap Screws (See procedures in this Group)

- Inspect for corrosion damage.
- Inspect condition of threads.
- Inspect for straightness.
- Check length.

9. When inspections and measurements have been completed, determine most probable causes of joint failure. Make all necessary repairs to joint components, cooling system, and fuel injection system.

10. Reassemble the engine according to procedures and specifications in the repair groups of this manual.

OUO1089,0000217 –19–06JUN02–2/2

Inspect and Clean Cylinder Head

1. Inspect combustion face for evidence of physical damage, oil or coolant leakage, or gasket failure prior to cleaning the cylinder head. Repair or replace cylinder head if there is evidence of physical damage, such as cracking, abrasion, distortion, or valve seat “torching”. Inspect all cylinder head passages for restrictions.
2. Scrape gasket material, oil, carbon, and rust from head. Use a powered wire brush to clean sealing surfaces.

IMPORTANT: Be sure to remove all plugs before cleaning head, as parts can be damaged or destroyed by hot tank solutions.

3. Clean cylinder head in a chemical hot tank, or with solvent and a brush.
4. Dry with compressed air and blow out all passages.

OUO1089,0000218 –19–06JUN02–1/1

Check Cylinder Head Flatness

Check cylinder head flatness using D05012ST Precision “Bevelled Edge” Straightedge and feeler gauge. Check lengthwise, crosswise, and diagonally in several places.

Specification	
Cylinder Head Flatness—	
Maximum Acceptable Out-of-Flat for Entire Length or Width	0.08 mm (0.003 in.)
Maximum Acceptable Out-of-Flat for Every 150 mm (5.90 in.)	0.03 mm (0.001 in.)

If out-of-flat exceeds specifications, the cylinder head must be reconditioned or replaced. (See MEASURE CYLINDER HEAD THICKNESS later in this group.)

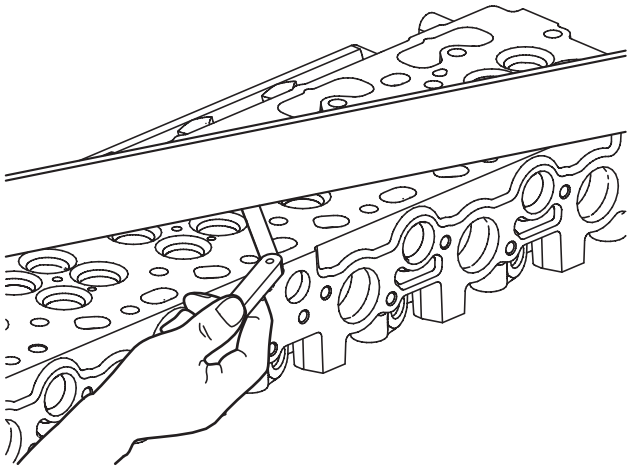

Cylinder Head Flatness Check

OUO1089,0000219 –19–06JUN02–1/1

Measure Cylinder Head Thickness

Measure head thickness from valve cover gasket rail-to-combustion face.

If cylinder head thickness is less than minimum allowable thickness, DO NOT attempt to resurface. Install a new cylinder head.

When resurfacing cylinder head, remove ONLY what is necessary to restore flatness.

Specification

New Cylinder Head—Thickness	104.87—105.13 mm (4.129—4.139 in.)
Minimum Acceptable Thickness	104.24 mm (4.104 in.)
Combustion Face Surface Finish (Surface Grind Only) (AA)	0.7—3.2 micrometers (31—125 micro-in.)
Maximum Wave Depth	0.012 mm (0.0005 in.)
Maximum Material Removal for Resurfacing	0.76 mm (0.030 in.)

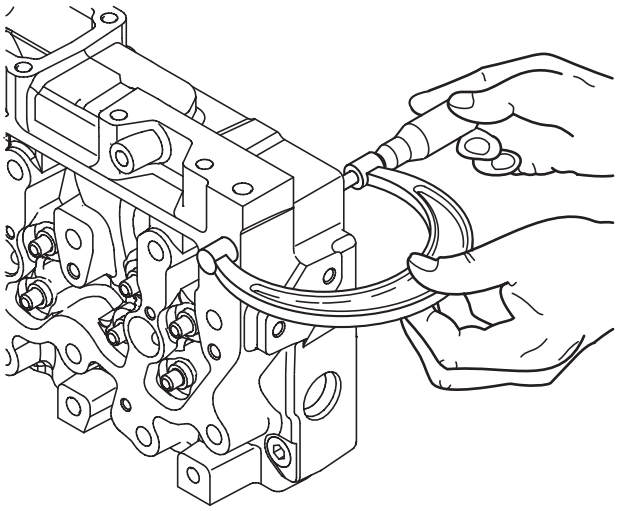

Cylinder Head Thickness Check

IMPORTANT: After resurfacing cylinder head, check for flatness as described earlier. Also check surface finish on combustion face of head.

Measure and record valve recess in cylinder head. (See MEASURE VALVE RECESS IN CYLINDER HEAD earlier in this group.)

OUO1089,000021A –19–06JUN02–1/1

Remove Fuel Injector Sleeves

1. Tap the inner diameter of the sleeve with a M22-1.0 (7/8-9) tap (A).
2. Insert a M22-1.0 (7/8-9) cap screw and pull out the fuel injection nozzle sleeve.

A—M22-1.0 (7/8-9) Tap

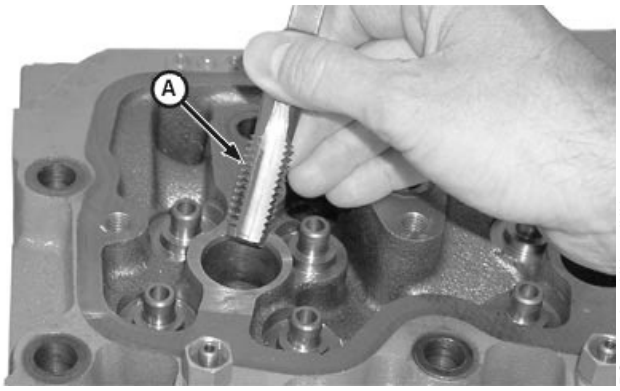

Fuel Injection Nozzle Sleeve Removal

OUO1089,0000234 –19–10DEC03–1/1

Clean Fuel Injector Bores

Clean fuel injection nozzle bores with a plastic brush before inspection or repair.

NOTE: A few drops of light oil or kerosene will help clean the bores.

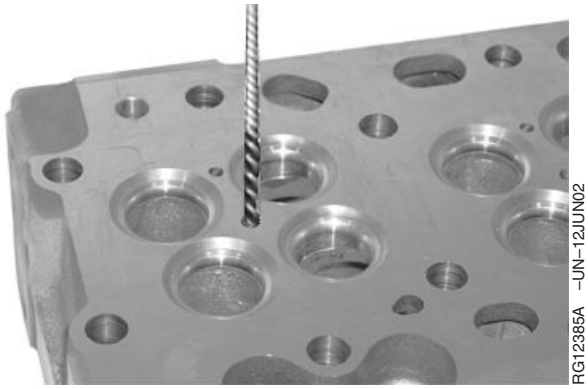

Clean Fuel Injection Nozzle Bore

OUO1089,0000232 –19–11JUN02–1/1

Install Fuel Injector Sleeves

IMPORTANT: If installing a new fuel injector nozzle sleeve with four-valve head attached to block, make sure piston is NOT at or near top dead center (TDC). Rotate engine until piston is at bottom dead center (BDC) or piston damage will result.

1. Support four-valve head so that the lower surface of the head is approximately 50 mm (2.0 in.) above work bench.

2. Apply LOCTITE® 620 completely around the lower, outer edge of the fuel injection nozzle sleeve (C).

IMPORTANT: Make sure O-rings are installed in their proper positions; BROWN O-ring in TOP position and BLACK O-ring in LOWER position. Failure to do so will result in premature O-ring failure.

Do not use any petroleum based products to lubricate fuel injector sleeve O-rings or O-rings will swell.

3. Install brown O-ring in top position and black O-ring in lower position on injector sleeve. Lubricate O-rings with liquid soap.

4. Set fuel injection nozzle sleeve (C) over bore and place JDG1649 Injector Sleeve Installer (D) into the sleeve.

5. Using a hammer, strike the nozzle installation tool carefully to drive the sleeve fully into the bore.

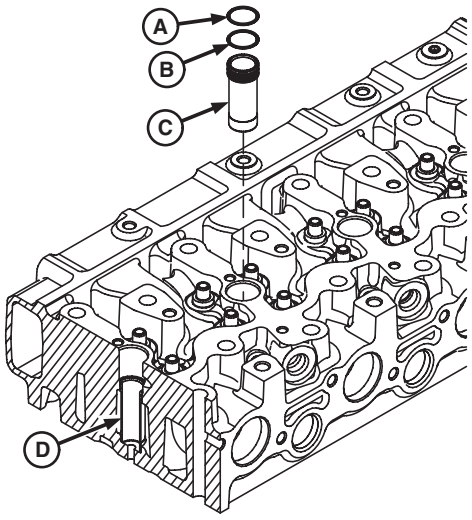

RG12406 –UN–18JUN02

Fuel Injector Nozzle Sleeve

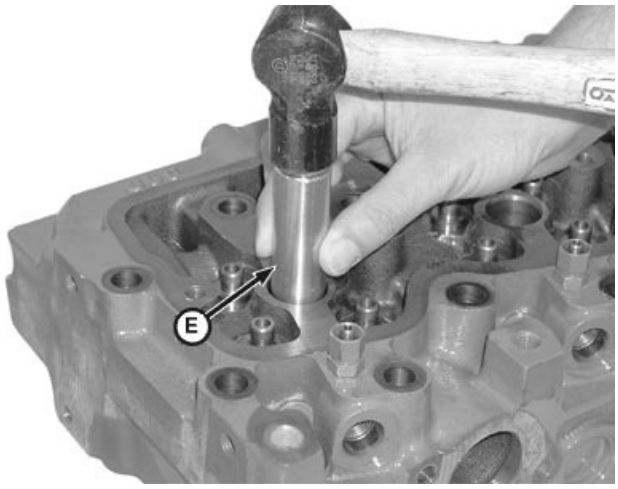

RG12386A –UN–19JUN02

Fuel Injection Nozzle Sleeve Installation

A—Brown O-Ring
B—Black O-Ring
C—Sleeve
D—Cut-Away View of Fuel Injector Sleeve
E—JDG1649 Injector Sleeve Installer

LOCTITE is a trademark of Loctite Corp.

OUO1089,0000235 –19–10DEC03–1/1

Clean Glow Plug Bores

Clean glow plug bores with a plastic brush before inspection or repair.

NOTE: A few drops of light oil or kerosene will help clean the bores.

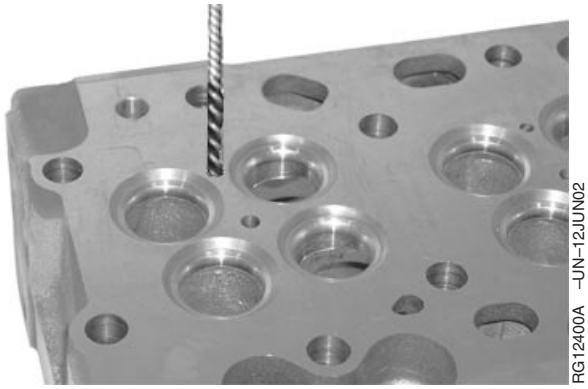

Clean Glow Plug Bores

OUO1089,0000233 –19–11JUN02–1/1

Clean Valve Guides

Clean valve guides with a plastic brush before inspection or repair.

NOTE: A few drops of light oil or kerosene will help clean the guides.

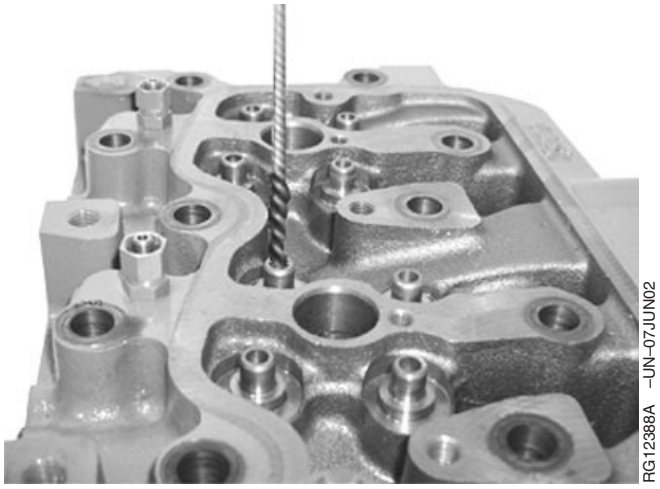

Valve Guide Cleaning

OUO1089,000021C –19–06JUN02–1/1

Measure Valve Guides

Using a telescopic gauge, measure valve guide wear.

Specification	
Valve Guide Bore (New)—ID	7.025—7.051 mm (0.276—0.277 in.)
Intake Valve Guide-to-Valve Stem (New)—Clearance	0.012—0.064 mm (0.0005—0.0025 in.)
Exhaust Valve Guide-to-Valve Stem (New)—Clearance	0.025—0.077 mm (0.0010—0.0030 in.)
Intake and Exhaust Valve Guide-to-Valve Stem (Wear Limit)—Clearance	0.15 mm (0.0059 in.)

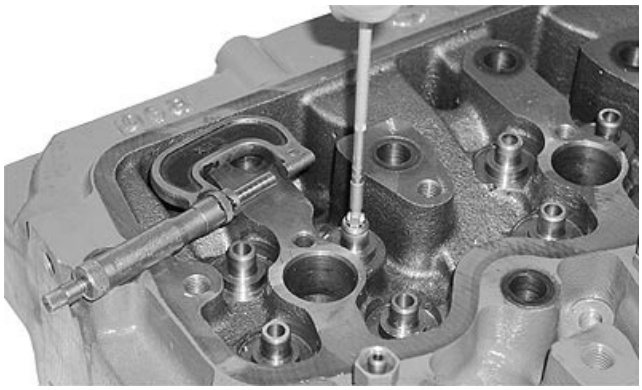

Valve Guide Wear

If valve guide-to-stem oil clearance exceeds the wear limit, but is less than 0.20 mm (0.008 in.), it is acceptable to knurl guides and ream to size. (See KNURL VALVE GUIDES, later in this group.)

IMPORTANT: Production valve guides have an M7-1 modified internal thread the entire length of guide with major diameter of 7.172—7.248 mm (0.2823—0.2853 in.). Thread must encompass full circumference for entire length and a 7.016 x 75 mm (0.2762 x 2.95 in.) pin must pass freely through the entire length of the guide. Have qualified machine shop thread valve guides accordingly after reaming.

OUO1089,000021D –19–15DEC03–1/1

Knurl Valve Guides

IMPORTANT: Valve guide knurling should only be done by experienced personnel familiar with equipment and capable of maintaining required specification.

ALWAYS knurl valve guides before reaming to assure proper valve guide-to-stem clearance.

1. Use JT05949 Valve Guide Knurler Kit to knurl valve guides. Use kit exactly as directed by the manufacturer.
2. After knurling, ream valve guide to finished size to provide specified stem-to-guide clearance.



Knurling Valve Guides

OUO1089,000021E –19–06JUN02–1/1

Clean and Inspect Valve Seats

1. Use an electric hand drill with D17024BR End Brush to remove all carbon on valve seats.
2. Inspect seats for excessive wear, cracks, or damage.
3. Check entire combustion face for rust, scoring, pitting, or cracks.



Valve Seat Cleaning and Inspection

OUO1089,000021F –19–06JUN02–1/1

Grind Valve Seats

IMPORTANT: Intake valves, exhaust valves, valve seat inserts, springs and retainers must be replaced in pairs to maintain proper valve bridge alignment. Also, replace bridge if any of these parts are replaced.

Do not grind valve seats. If valve seat is pitted, burnt, worn or damaged, replace intake or exhaust valve seats in pairs.

OUO1089,0000220 –19–06JUN02–1/1

Remove Valve Seat Inserts

IMPORTANT: Be careful not to damage cylinder head when removing valve seats. Valve seat removal should only be done by experienced personnel familiar with procedures.

DO NOT use an oxy-acetylene torch to remove valve seat inserts, as it alters the hardness of the cylinder head.

Valve seat inserts are made of sintered (powdered) metal. Remove inserts by one of the following methods:

Continued on next page

OUO1089,0000221 –19–06JUN02–1/4

02
021
38

Raising Burr on Valve Seat Insert

1. Using a carbide deburring tool (A), raise a burr (B) on bottom of valve seat insert.

A—Deburring Tool
B—Burr

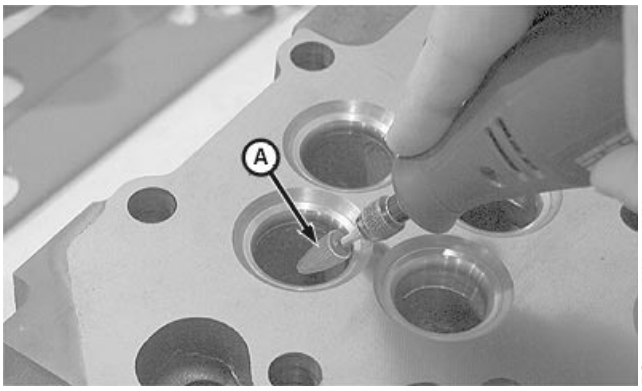

Carbide Deburring Tool

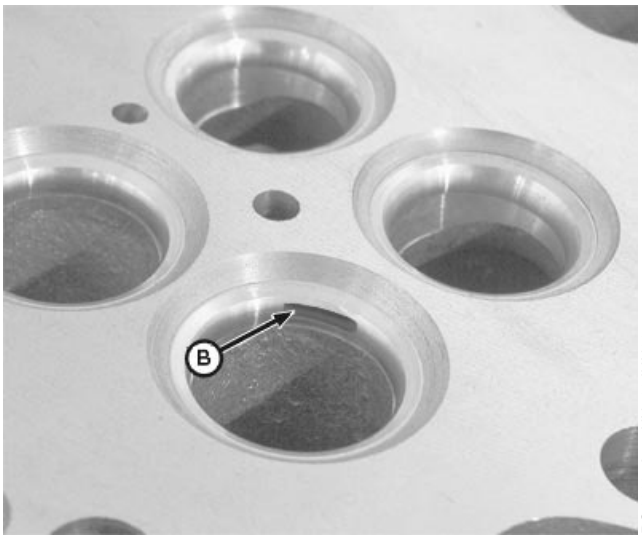

Valve Seat

Continued on next page
OUO1089,0000221 –19–06JUN02–2/4

2. Protect surface of cylinder head with cardboard or cloth. Using a chisel with special ground end (C), tap handle of chisel with hammer until valve seat insert (D) comes loose.

C—Special Ground Chisel
D—Valve Seat Insert

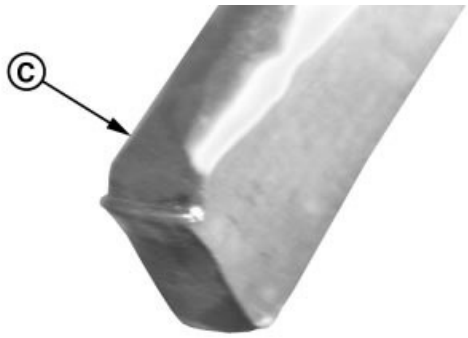

RG7818 –UN–13NOV97

Chisel for Valve Seat Insert Removal

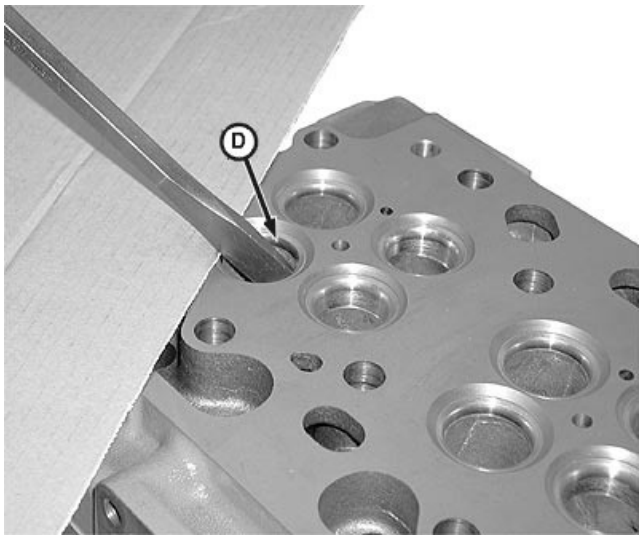

RG12399A –UN–12JUN02

Valve Seat Insert Removal

Continued on next page

Using an Arc Welder

1. Protect the valve guide by installing a cap screw or dowel in guide to protect from weld spatter.
2. Protect the cylinder head surface with a non-flammable welder's cloth (A). Apply a thin bead of weld (B) around ID of valve seat insert. Allow insert to cool and use a screwdriver or similar tool and carefully pry insert from bore.
3. After removal of inserts, thoroughly clean area around valve seat bore and inspect for damage or cracks. Replace cylinder head as necessary.

A—Welder's Cloth
B—Weld Bead

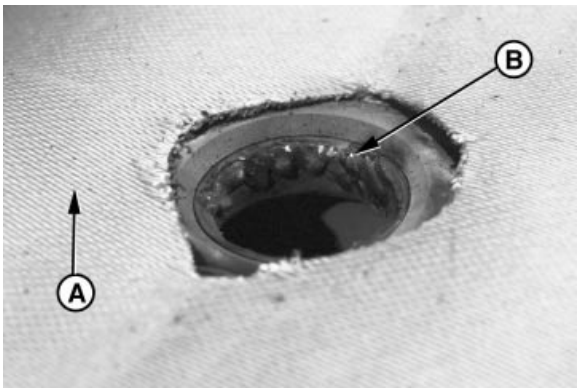

RG7761 –UN–10NOV97

Weld Bead for Valve Seat Insert Removal

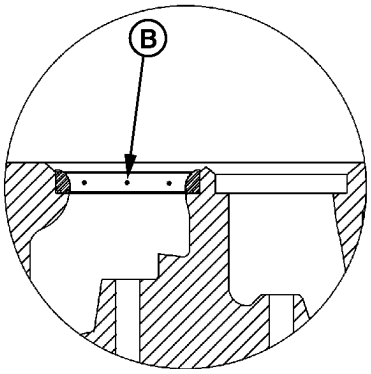

RG7813 –UN–13NOV97

Weld Bead Location

OUO1089,0000221 –19–06JUN02–4/4

Measure Valve Seat Bore in Cylinder Head

If bore dimensions are not within specification, machine head to the following specifications:

Exhaust Valve Seat Insert Bore Specifications:

A	.....	36.436—36.462 mm (1.4344—1.4355 in.)
B	.....	2.34 mm (0.092 in.) Reference
C	.....	8.715—8.785 mm (0.3431—0.3458 in.)
D	.....	38—42°
E	.....	Maximum Radius 0.5 mm (0.019 in.)

Maximum surface finish of bore “A” ..... 3.2 (micron)

Intake Valve Seat Insert Bore Specifications:

A	.....	37.436—37.462 mm (1.4738—1.4748 in.)
B	.....	2.8 mm (0.110 in.) Reference
C	.....	9.215—9.285 mm (0.3627—0.3655 in.)
D	.....	38—42°
E	.....	Maximum Radius 0.5 mm (0.019 in.)

Maximum surface finish of bore “A” ..... 3.2 (micron)

Replacement Valve Seat Insert OD:

Intake	.....	37.487—37.513 mm (1.476—1.477 in.)
Exhaust	.....	36.487—36.513 mm (1.436—1.437 in.)

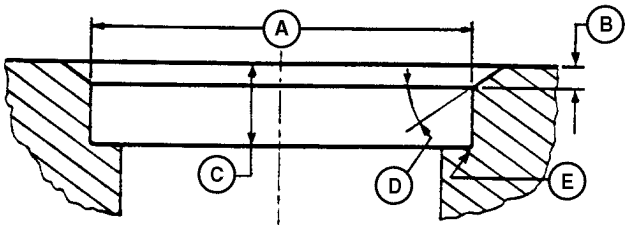

Cylinder Head Valve Seat Bore

OUO1089,0000222 –19–10DEC03–1/1

Install Valve Seat Inserts

IMPORTANT: Intake valves, exhaust valves, valve seat inserts, springs and retainers must be replaced in pairs to maintain proper valve bridge alignment. Also, replace bridge if any of these parts are replaced.

1. Use JDG1653-1 Valve Seat Driver (A) and JDG1653-2 Valve Seat Installer (B) to install valve seat inserts in cylinder head.

   Use one end of JDG1653-2 Valve Seat Installer to install intake valve seat inserts and the other end to install exhaust valve seat inserts.

2. Install valves and measure valve recess. (See MEASURE VALVE RECESS IN CYLINDER HEAD, earlier in this group.)

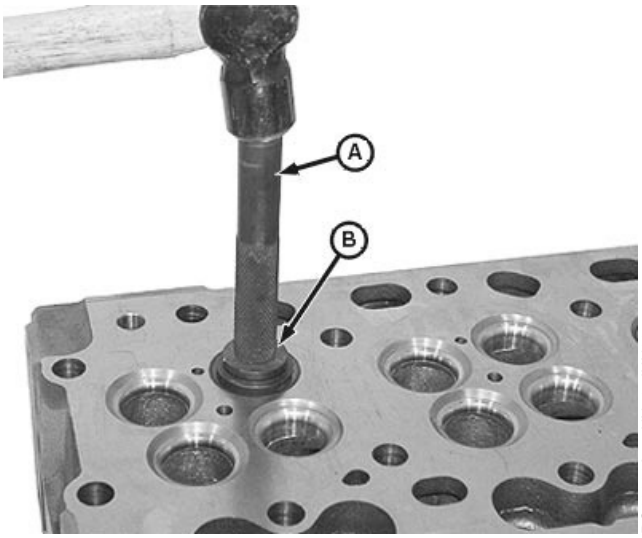

Valve Seat Insert in Cylinder Head Installation

A—JDG1653-1 Valve Seat Driver
B—JDG1653-2 Valve Seat Installer

OUO1089,0000223 –19–06JUN02–1/1

Install Valves

IMPORTANT: Intake valves, exhaust valves, valve seat inserts, springs and retainers must be replaced in pairs to maintain proper valve bridge alignment. Also, replace bridge if any of these parts are replaced.

1. Coat entire length of valve guide bores and dip valve stem end of valve in AR44402 lubricant before installation.

NOTE: Valves must move freely in guide and seat properly in head to form an effective seal.

2. Insert valves in head (if valves are reused, install in same location from which removed).

3. Apply clean engine oil to valve stem seal and use JDG1651 Valve Seal Installer (A) to slide valve stem seal (B) over valve stem and onto valve guide tower (C).

NOTE: Valve springs MUST be installed with small diameter end of spring away from cylinder head.

4. Install valve springs and retainers.

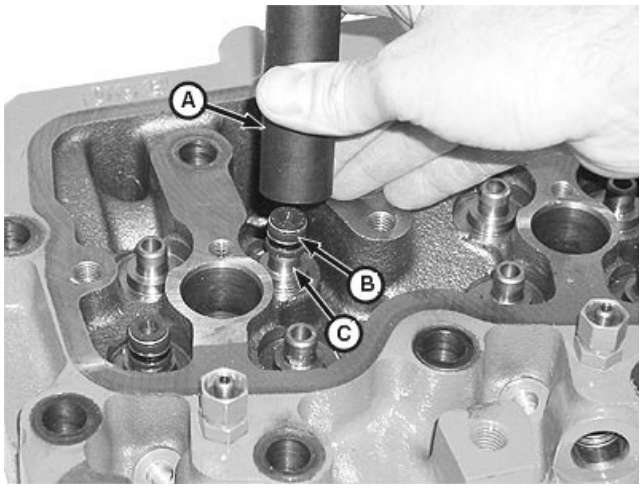

Valve Stem Seal Installation Tool

A—JDG1651 Valve Seal Installer
B—Valve Stem Seal
C—Valve Guide Tower

OUO1089,0000211 –19–05JUN02–1/2

5. Compress valve springs using JDE138 Valve Spring Compressor (A) and install retainer locks (B) on valve stems.

6. Strike end of each valve three or four times with a soft mallet (non-metallic) to ensure proper positioning of the retainer locks.

7. Recheck valve recess. (See MEASURE VALVE RECESS IN CYLINDER HEAD, earlier in this group.)

A—Spring Compressor
B—Retainer Locks

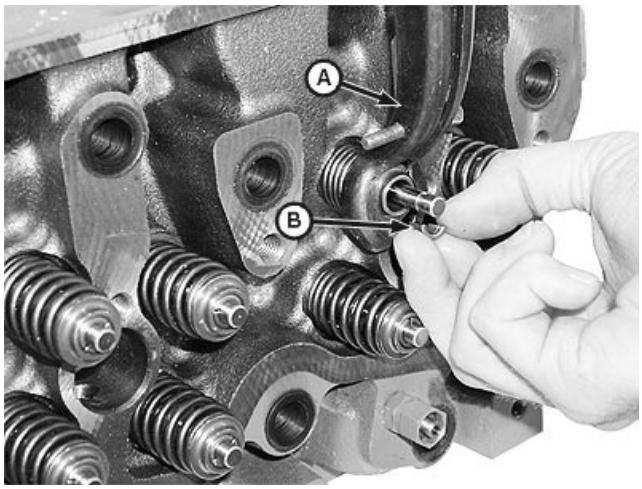

Valve Spring Compressor and Retainer Locks

OUO1089,0000211 –19–05JUN02–2/2

Inspect Cylinder Head Cap Screws

Inspect cap screws for corrosion, damage and overall condition of threads for indication of other problems.**DO NOT REUSE CAP SCREWS.**



RG6319 –UN–23NOV97

Cylinder Head Cap Screw

RG19661,000001A –19–29JUN05–1/1

Inspect and Clean Exhaust Manifold

1. Thoroughly clean all passages and gasket surfaces in exhaust manifold and exhaust elbow.
2. Inspect entire exhaust manifold for cracks or damage. Replace parts as necessary.

OUO1089,0000225 –19–06JUN02–1/1

Clean and Inspect Top Deck of Cylinder Block

1. Remove gasket material, rust, carbon, and other foreign material from top deck. Gasket surface must be clean.
2. Clean threaded holes in cylinder block using JDG680 Tap or any 1/2-13 UNC-2A tap about 76 mm (3.0 in.) long. Use compressed air to remove debris and fluids from the cap screw holes. Replace block if there is evidence of damage.
3. Use compressed air to remove all loose foreign material from cylinders and top deck.

IMPORTANT: All debris must be cleaned from the camshaft followers before assembling the engine.

4. If not previously done, remove camshaft followers from block and wash in solvent. Lubricate with clean engine oil and install in the same bore.
5. Inspect top deck for flatness and serviceability. (See MEASURE CYLINDER BLOCK TOP DECK FLATNESS in Group 030.)

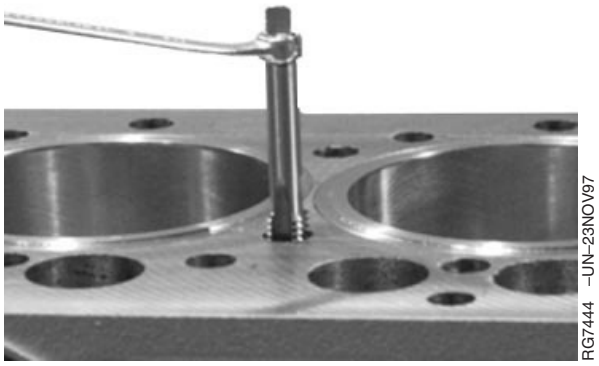

Cleaning Threaded Holes in Cylinder Block



Clean and Lube Camshaft Followers

OUO1089,0000226 –19–06JUN02–1/1

Check Cylinder Liner Standout (Height Above Block) Four-Valve Head

1. Secure liners using cap screws and flat washers. Flat washers should be at least 3 mm (1/8 in.) thick. Tighten cap screws to 70 N•m (50 lb-ft).

2. Using JDG451 or KJD10123 Gauge (B) and D17526CI or D17527CI Dial Indicator (C), measure liner height (A) at 1, 5, 7, and 11 o'clock positions as viewed from flywheel end of engine. Record all measurements by cylinder number.

Specification

Cylinder Liner—Height above Block	0.030—0.100 mm (0.001—0.004 in.)
Maximum Permissible Height Difference at Nearest Point of Two Adjacent Liners, or Within a Single Liner	0.05 mm (0.002 in.)

3. Remove and shim, or replace, any liner that does not meet height specifications. (See Measure and Adjust Cylinder Liner Standout (Height Above Block) in Group 030.)

A—Liner Height
B—Gauge
C—Dial Indicator

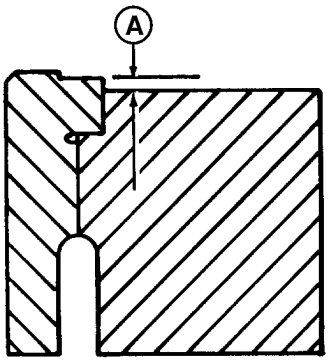

RG6439 –UN–03NOV97

Cylinder Liner Standout (Above Block)

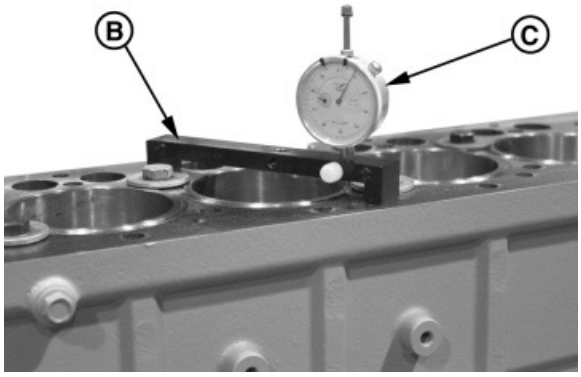

RG7445A –UN–03NOV97

Measure Cylinder Standout (Above Block)

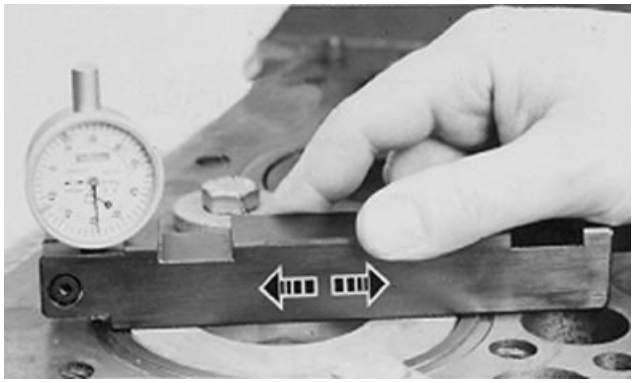

RG12441 –UN–01DEC03

Using KJD10123

OUO1082,00002AB –19–01JUL04–1/1

Install Cylinder Head

1. Dip fuel supply pump push rod (A) in clean engine oil and carefully install in cylinder block before installing cylinder head.

A—Fuel Supply Pump Push Rod



Fuel Supply Pump Push Rod

OUO1089,0000228 –19–10DEC03–1/4

2. Reinstall two dowel pins (B) in cylinder block at locating holes, if removed.

IMPORTANT: ALWAYS thoroughly inspect cylinder head gasket for possible manufacturing imperfections. Return any gasket that does not pass inspection.

3. Place new head gasket on cylinder block. Do not use sealant; install dry.

B—Dowel Pins

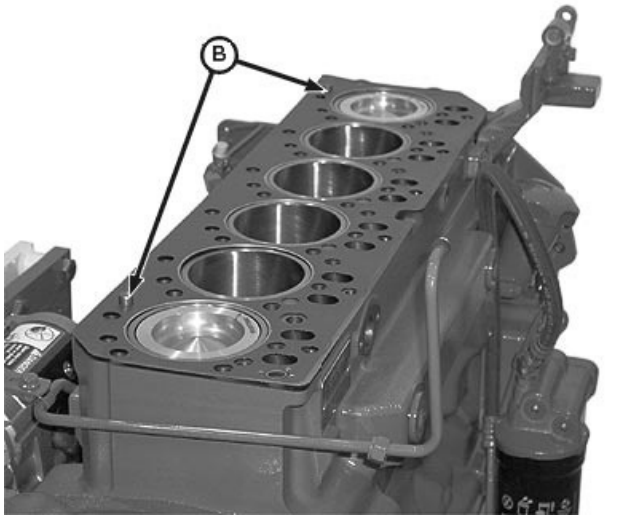

Cylinder Head Dowel Pins

Continued on next page

OUO1089,0000228 –19–10DEC03–2/4

IMPORTANT: The O-ring seal in the head gasket can be damaged if head is repositioned while resting on engine block. Install and use guide studs (A) to position cylinder head on block.

4. Position cylinder head over guide studs and lower onto cylinder block.

A—Guide Stud

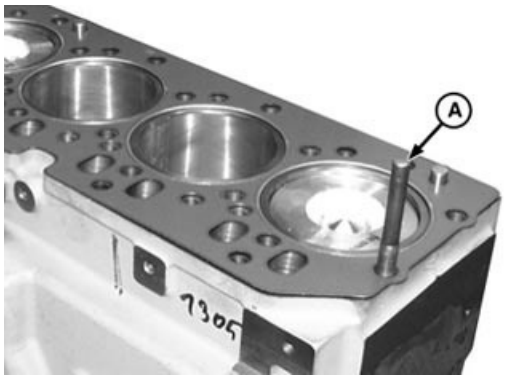

RG13377 –UN–10DEC03

Guide Studs

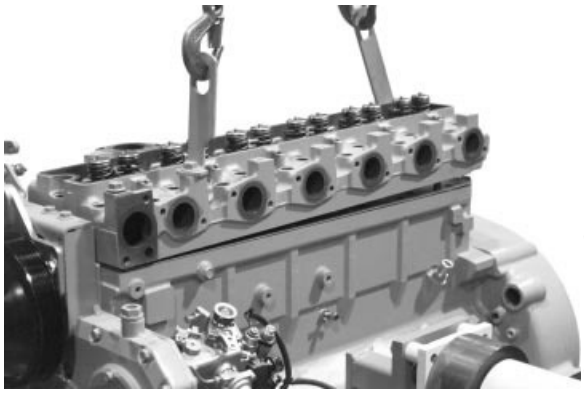

RG7415 –UN–23NOV97

Cylinder Head to Block Installation

Continued on next page OUO1089,0000228 –19–10DEC03–3/4

5. Dip entire cap screw in JDT305 Lubricant. Remove excess from screw.

6. Remove guide studs.

IMPORTANT: Always use new cylinder head cap screws.

7. Install new flanged-head cylinder head cap screws.

8. Tighten all cap screws to specified torques (in sequence shown, beginning with No. 1), following steps 1—4 below. Then, torque-turn cap screws following procedure on next page.

Cylinder Head Cap Screws—Specification

Step 1—Initial—Torque	100 N•m (75 lb-ft)
Step 2—Second—Torque	150 N•m (110 lb-ft)
Step 3—Verify (After 5 Minutes)—Torque	150 N•m (110 lb-ft)
Step 4—Final—Torque-Turn	Tighten each screw an additional 60° ± 10°. (See TORQUE-TURN METHOD FOR PROPER TORQUE in this group.)

Retorque of cylinder head cap screws after engine break-in is not required when using the recommended torque procedure along with flanged-head cap screws.

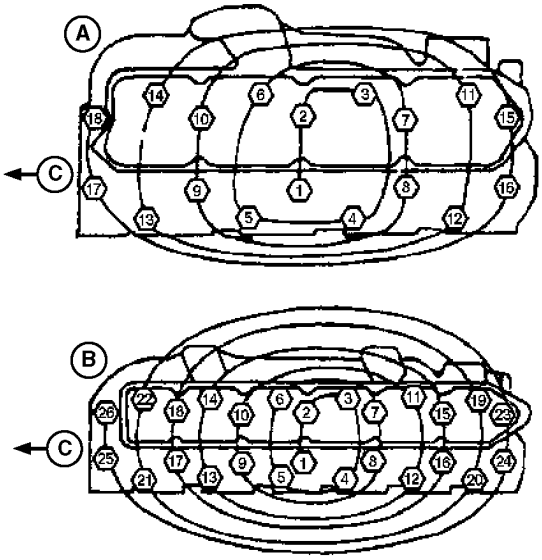

RG12401 –UN–12JUN02

Cylinder Head Bolt Tightening Sequence

A—4-Cylinder Engine
B—6-Cylinder Engine
C—Arrow Toward Front of Engine

OUO1089,0000228 –19–10DEC03–4/4

Torque-Turn Method for Proper Torque

After tightening cap screws to 150 N•m (110 lb-ft), use JT05993 Torque Angle Gauge or the line scribe method below to tighten each cap screw an additional 60°.

Line Scribe Method:

1. Make two marks (A and B) on socket 1/6 turn (60° ± 10°) apart.
2. Place socket on cap screw and make a mark on cylinder head (C) in line with first mark (A) on cap screw.
3. Tighten all cap screws (in sequence shown on previous page) until second mark (B) on socket aligns with mark (C) on cylinder head.

Retorque of cylinder head cap screws after engine break-in is not required when using the recommended torque procedure along with flanged-head cap screws.

A—First Mark on Socket
B—Second Mark on Socket
C—Mark on Cylinder Head Surface

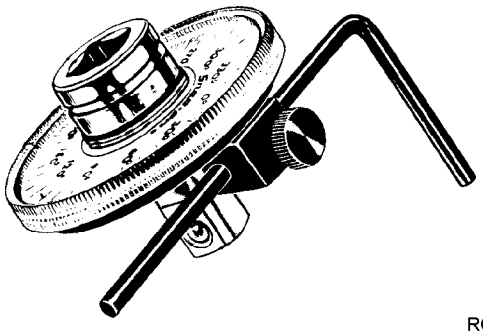

RG5698 –UN–05DEC97

Torque Angle Gauge

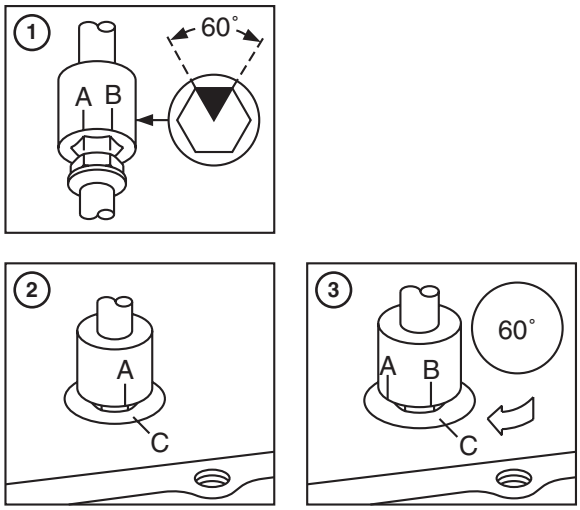

RG11798 –UN–25OCT01

Torque-Turn Tightening Procedure

OUO1089,0000229 –19–06JUN02–1/1

Install Fuel Injectors

NOTE: Prior to installing fuel injector, ensure that used copper washer has been removed from bottom of fuel injector sleeve.

1. Install copper washer (B) on end of fuel injector (C) tip.
2. Install fuel injector with injector hold-down clamp (D) into cylinder head. Make sure injector fuel inlet port (A) is facing fuel supply tube (E) once installed.
3. Install fuel supply tube (E) with smaller end in toward fuel injector. Turn injector by hand until tube is properly seated in injector.

IMPORTANT: Use proper torque procedure for tightening fitting (G) and screw (F).

4. Using proper torque procedure, install fitting (G) and screw (F). (See INSTALL ELECTRONIC INJECTORS in Section 02, Group 090 of CTM220—Level 11 Electronic Fuel Systems with Denso High Pressure Common Rail.)

NOTE: When replacing glow plugs, make sure glow plugs are replaced with new ones of the same voltage rating. 24-volt glow plugs have a blue tint while 12-volt glow plugs have a yellow tint.

5. Install glow plug (H) and torque to specification.

Specification	
Glow Plug—Torque	15 N•m (133 lb-in.)

6. Repeat procedure for each cylinder.

A—Injector Fuel Inlet Port
B—Copper Washer
C—Fuel Injector
D—Injector Hold-Down Clamp
E—Fuel Supply Tube
F—Screw
G—Fitting
H—Glow Plug



RG12391A –UN–10JUN02

Fuel Injector Inlet Port

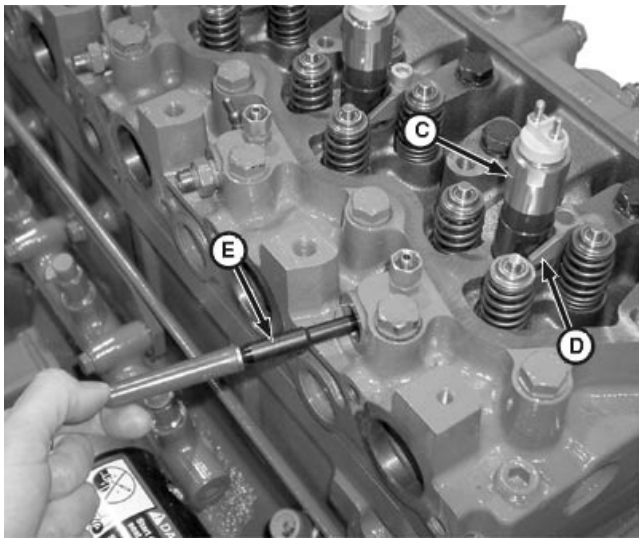

RG12390A –UN–10JUN02

Fuel Supply Tube Installation

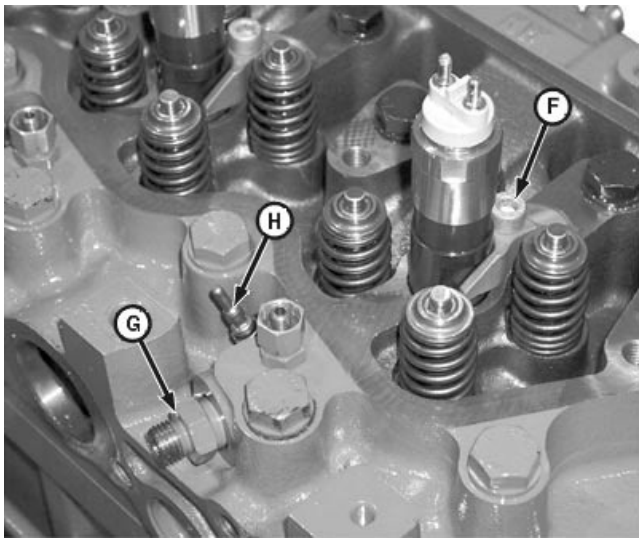

RG12392A –UN–10JUN02

Hold-Down Clamp and Fitting

OUO1089,000022E –19–10DEC03–1/1

Install Carrier Assembly

IMPORTANT: Replace sealing ring (B) and rocker arm shaft oil supply O-ring (A) every time the rocker carrier is removed during engine or cylinder head overhaul.

1. The following procedure should be used to install a new sealing ring (B):
   - Carefully remove old sealing ring from rocker carrier. Do not use any cutting tool that could damage the carrier.
   - Clean the groove with acetone. Dry with compressed air.
   - When installing new sealing ring in groove, start at ends and work toward the center of the cover. Do not use sealant on sealing ring.
2. Apply sealing compound (Hylomar 760) to both carrier screws (B) before installing.



RG12395A –UN–03JUL02

Rocker Carrier Sealing Rings

A—Rocker Arm Shaft Oil Supply O-Ring
B—Carrier Sealing Ring

OUO1089,0000230 –19–07JUN02–1/2

3. Install rocker arm carrier (A) and tighten screws (B) to specification.

Specification	
Rocker Arm Carrier Screws— Torque	60 N•m (44 lb-ft)

A—Rocker Arm Carrier
B—Screw (2 used)

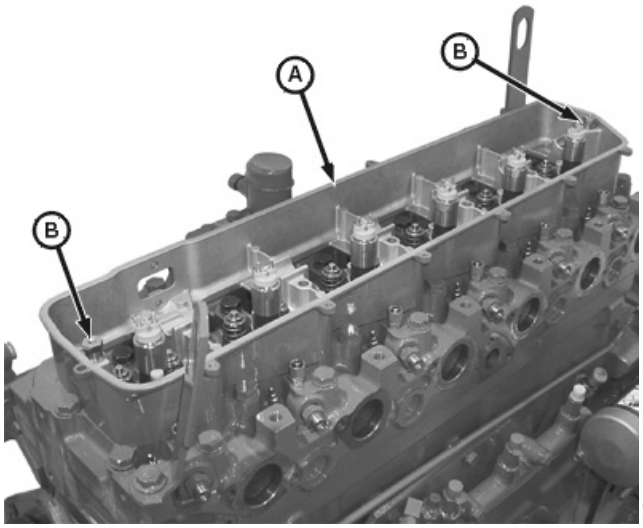

RG12362 –UN–03JUL02

Rocker Arm Carrier

OUO1089,0000230 –19–07JUN02–2/2

Install Rocker Arm Assembly

1. Install push rods (A) in same location from which removed.
2. Install bridges (B) in same location from which removed.

A—Push Rod
B—Bridge

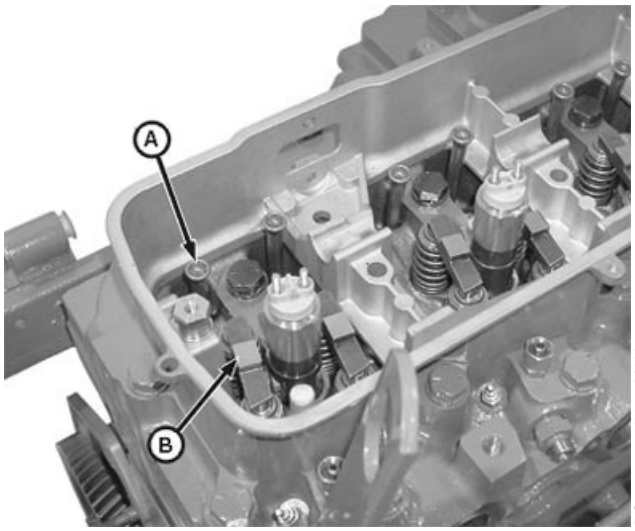

Push Rods and Bridges

Continued on next page

OUO1089,000022A –19–10DEC03–1/3

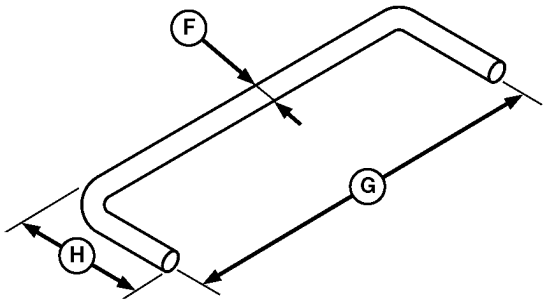

RG12445 –UN–03DEC03

Rocker Arm Holder

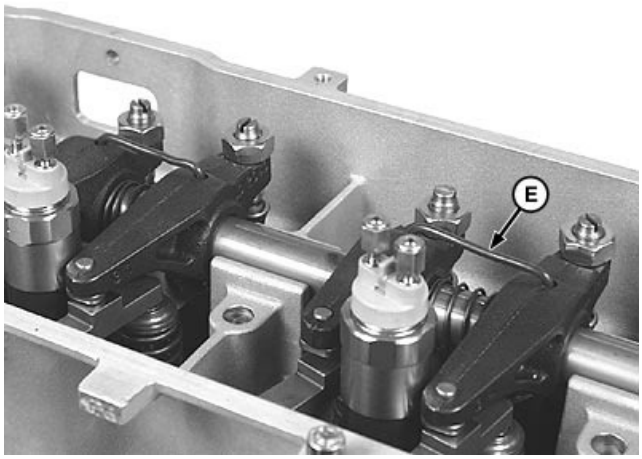

RG12446 –UN–03DEC03

Rocker Arm Holder Installation

IMPORTANT: Relieve tension on rocker arm adjusting screws to avoid damaging rocker arm shaft during installation.

To aid in rocker arm shaft assembly installation, use rocker arm holders (E) as shown.

3. Position rocker arm assembly on engine.

4. Lubricate all rocker arms and push rod sockets with engine oil and make sure they move freely. Apply LOCTITE® 242 Thread Lock and Sealer to end clamp clamp screws. Tighten both rocker arm shaft end clamps (D) to specification.

Specification

Rocker Arm Shaft End Clamps—
Torque ..... 30 N•m (22 lb-ft)

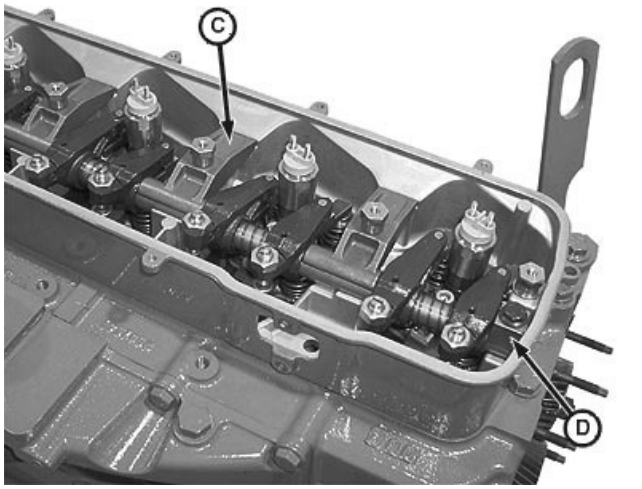

RG12360 –UN–03JUL02

Rocker Arm Shaft Installation

A—Nut
B—Cap Screw (2 used)
C—Clamp
D—End Clamp
E—Rocker Arm Holder
F—Diameter 3 mm (0.12 in.)
G—Width 50 mm (1.97 in.)
H—Leg Length 15 mm (0.59 in.)

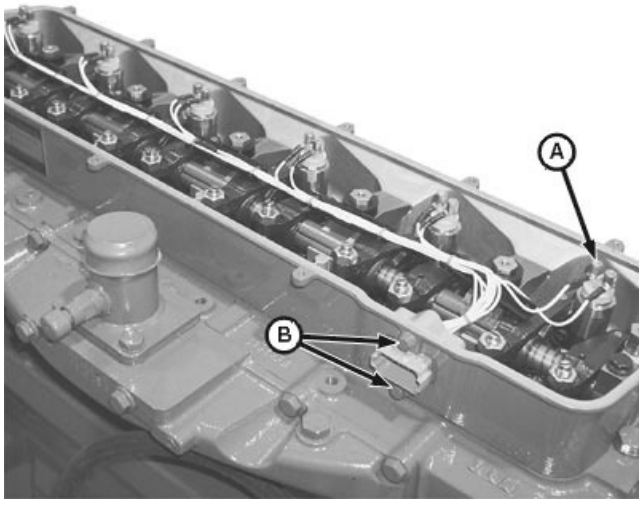

RG12178 –UN–03JUL02

Fuel Injection Nozzle Harness Installation

LOCTITE is a registered trademark of Loctite Corp.

Continued on next page

5. Tighten rocker arm shaft clamps (C) to specification.

	Specification
Rocker Arm Shaft Clamps—Torque	60 N•m (44 lb-ft)

6. Install fuel injection nozzle harness securing wires on injection nozzles with nuts (A), and connector body in rocker arm carrier with cap screws (B). (See INSTALL ELECTRONIC INJECTORS in Section 02, Group 090 in CTM220—Level 11 Electronic Fuel Systems with Denso High Pressure Common Rail.)

7. Adjust valve clearance. (See CHECK AND ADJUST VALVE CLEARANCE earlier in this group.)

OUO1089,000022A –19–10DEC03–3/3

Inspect and Clean Ventilator Outlet Hose

NOTE: If ventilator hose or tube is crimped or restricted in any way, high oil pressure or possible loss of oil could result in engine damage.

1. Check ventilator outlet hose (A) on rocker arm cover for bent or damaged condition. Replace if necessary.

2. Clean ventilator hose and tube if they are restricted.

A—Ventilator Outlet Hose

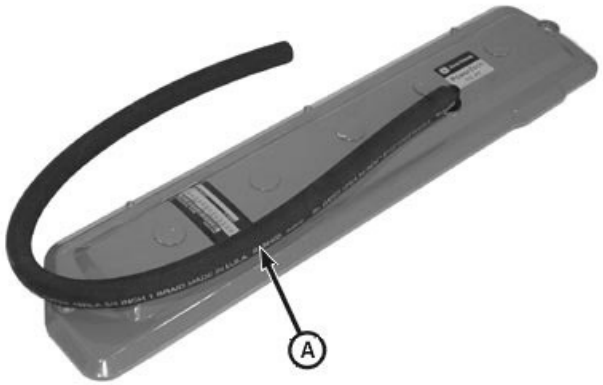

RG12393A –UN–10JUN02

Ventilator Outlet Hose Inspection

OUO1089,000022B –19–06JUN02–1/1

Remove, Inspect, and Install Closed Crankcase Ventilation System (If Equipped)

02
021
56

NOTE: CCV valve may be mounted to engine (as shown) or remotely mounted. Verify that centerline of mounted CCV valve is between 350 mm-450 mm (13.78-17.72 in.) above centerline of crankshaft. On engines with dual dipstick option, the CCV valve must be mounted at a minimum height of 420 mm (16.54 in.). Correct the mounting location if it is not correct.

1. Remove parts (A-H).
2. Inspect hoses (C, D and G) for kinks, blockage, or other damage.
3. With check valve (H) connected to hose (G), hold hose from end opposite check valve, letting check valve hang.
4. Pour oil into open end of hose. Oil should pass through check valve before hose is full. If it does not, verify the following:
   - Hose length is at least 275 mm (10.83 in.).
   - Hose is not plugged.
   - Check valve is installed with black end towards crankcase.
   - Check valve functions correctly.
5. Verify that crankcase oil drain tube (I) is not plugged.

NOTE: CCV valve has no serviceable internal parts.

6. Inspect CCV valve (A) for cracks or other damage.
7. Replace parts as necessary.
8. Install parts (A—H).

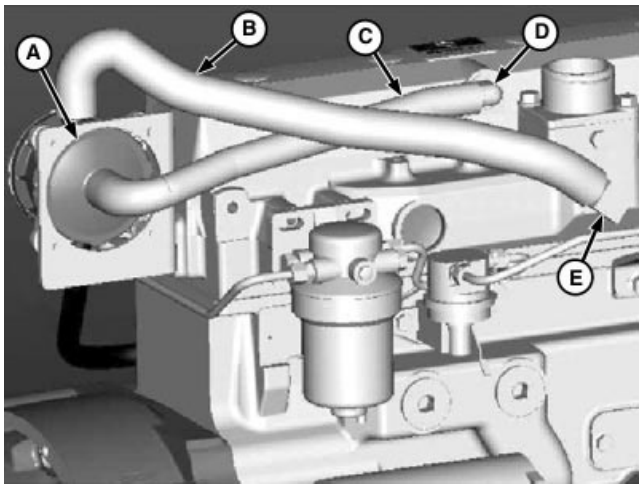

RG12426 –UN–20NOV03

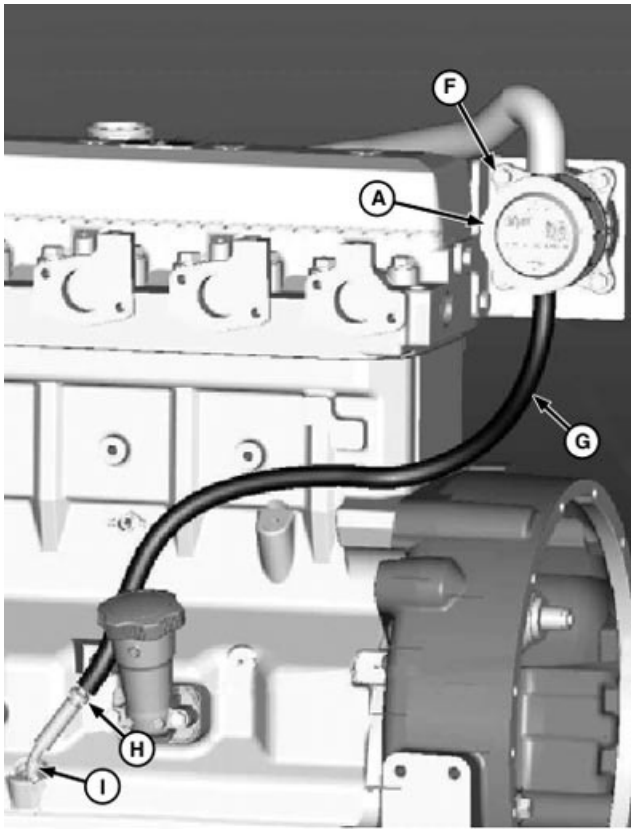

RG12427 –UN–03FEB04

A—Closed Crancase Ventilation (CCV) Valve
B—Hose, CCV Valve to Intake Manifold
C—Hose, Valve Cover to CCV Valve
D—Valve Cover Vent Fitting
E—Intake Manifold Fitting
F—Cap Screw, CCV Valve to Bracket
G—Oil Drain Hose
H—Check Valve
I—Crankcase Oil Drain Tube

OUO1082,00002AD –19–01JUL04–1/1

Install Rocker Arm Cover

IMPORTANT: Replace sealing ring (A) every time the rocker arm cover is removed during engine or cylinder head overhaul.

The following procedure should be used to install a new sealing ring (A):

- Carefully remove the old sealing ring from rocker arm cover. Do not use any cutting tool that could damage the cover.
- Clean the groove with acetone. Dry with compressed air.
- When installing new sealing ring in groove, start at ends and work toward the center of the cover. Do not use sealant on sealing ring.

IMPORTANT: Make sure fuel injection harness wires are properly secured. Wires not properly secured will be pinched by valve springs with engine operating.

1. Install rocker arm cover with sealing ring.

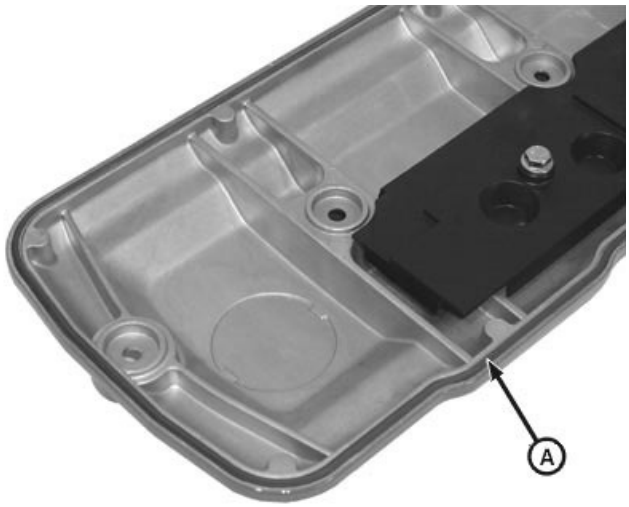

RG12394A –UN–10JUN02

Rocker Arm Cover Sealing Ring

A—Sealing Ring

OUO1089,000022C –19–10DEC03–1/2

2. Install cap screws and O-rings (A). Tighten all cap screws to specifications, starting at the center and alternating sides until reaching the ends. DO NOT OVERTIGHTEN.

Specification	
Rocker Arm Cover Cap Screws (Four-Valve Head)—Torque	7 N•m (62 lb-in.)

3. Install button plugs (B).

A—Cap Screw and O-Ring
B—Button Plug

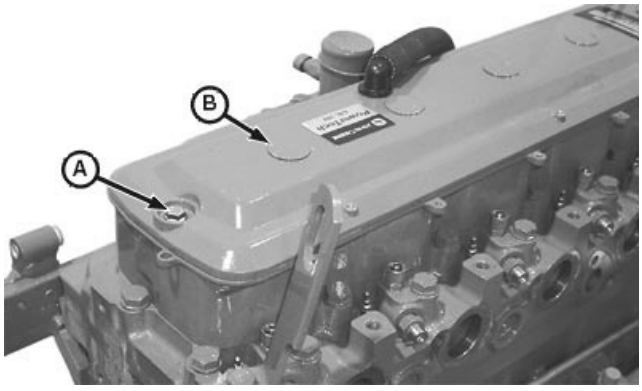

RG12177 –UN–03JUL02

Rocker Arm Cover

OUO1089,000022C –19–10DEC03–2/2

Complete Final Assembly

1. Install fuel leak-off line assembly (E) to engine.
2. Connect fuel leak-off line nut (G) and tee fitting nut nut (F) at each tee fitting. (See REMOVE AND INSTALL LEAK OFF LINES in Section 02, Group 090 in CTM220—Level 11 Electronic Fuel Systems with Denso High Pressure Common Rail.)
3. Install glow plug harness with rail (H) on engine. Torque glow plug harness rail screws to specification.

Specification

Glow Plug Harness Rail Screws—Torque ..... 11 N•m (97 lb-in.)

4. Install fuel delivery lines (D). (See REMOVE AND INSTALL LEAK OFF LINES in Section 02, Group 090 in CTM220—Level 11 Electronic Fuel Systems with Denso High Pressure Common Rail.)
5. Install fuel supply pump (C). (See INSTALL MECHANICAL FUEL TRANSFER PUMP in Section 02, Group 090 in CTM220—Level 11 Electronic Fuel Systems with Denso High Pressure Common Rail.)
6. Install fuel filters (A) and (B) and connect fuel lines.
7. Install alternator, if previously removed. (See REMOVE AND INSTALL ALTERNATOR in Group 100.)

A—Final Fuel Filter
B—Primary Fuel Filter/Water Separator
C—Fuel Supply Pump
D—Fuel Delivery Line
E—Fuel Leak-Off Line Assembly
F—Tee Fitting Nut
G—Fuel Leak-Off Line Nut
H—Glow Plug Harness Rail

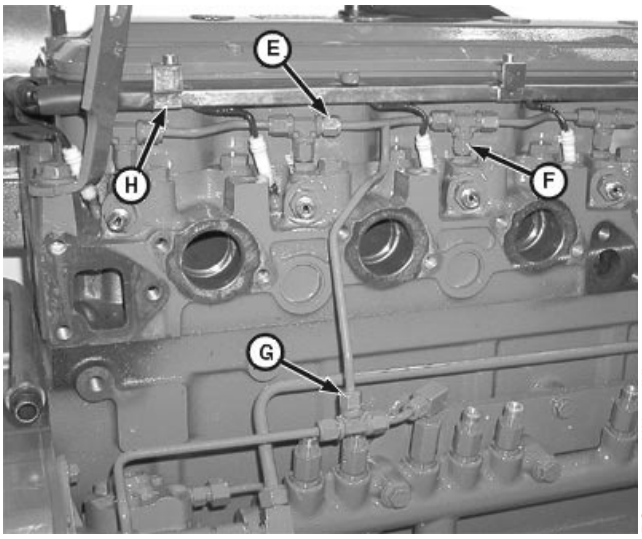

RG12176 –UN–03JUL02

Fuel Return Line

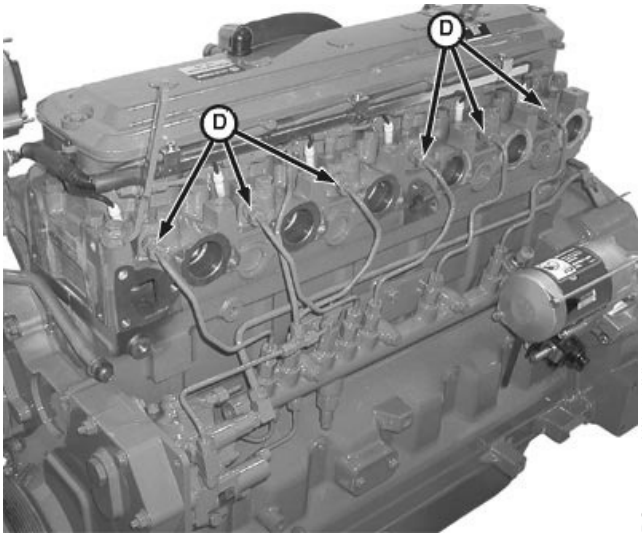

RG12175 –UN–03JUL02

Fuel Lines

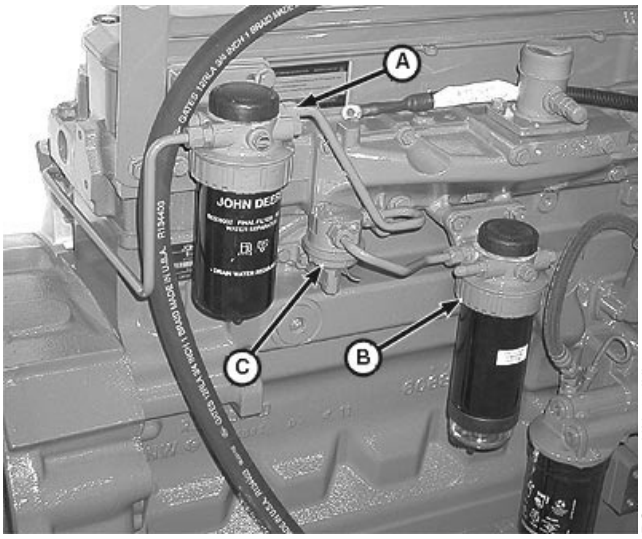

RG12174 –UN–03JUL02

Fuel Filters

Continued on next page

8. Install plate (D) to engine.

9. Install bracket (A).

10. Install pulley with cap screws (C).

11. Install fan belt (B).

A—Bracket
B—Fan Belt
C—Cap Screws (4 used)
D—Plate

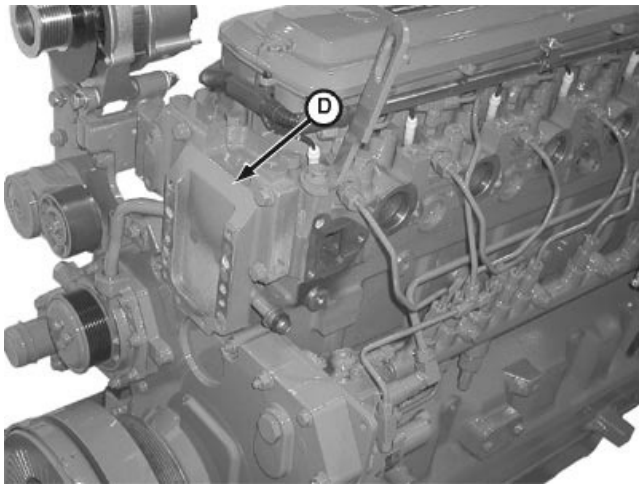

Fan Pulley Mounting Plate Removal

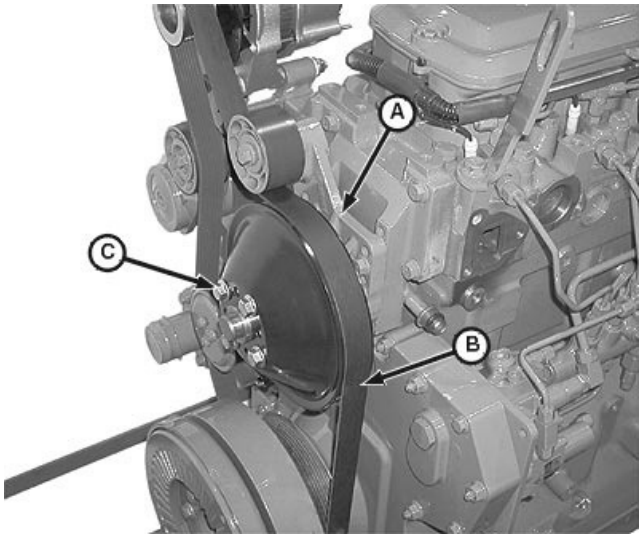

Fan Belt and Pulley Removal

Continued on next page

OUO1089,000022D –19–10DEC03–2/4

12. Install thermostat housing (E), coolant manifold and side port. (See REMOVE AND INSTALL COOLANT MANIFOLD, THERMOSTATS AND SIDE PORT (FOUR-VALVE HEAD) in Group 070.)

13. Install sleeve (D) in each exhaust port.

14. Install heat shield (C), if equipped, and torque to specification.

Specification	
Heat Shield-to-Cylinder Head Screws—Torque	60 N•m (44 lb-ft)
Heat Shield-to-Rocker Arm Cover Screws—Torque	10 N•m (88 lb-in.)

15. Install turbocharger oil drain line (B) to engine.

16. Install exhaust manifold (A) with gaskets. (See REMOVE, INSPECT AND INSTALL EXHAUST MANIFOLD in Group 080.)

A—Exhaust Manifold
B—Turbocharger Oil Drain Line
C—Heat Shield
D—Sleeve
E—Thermostat Housing

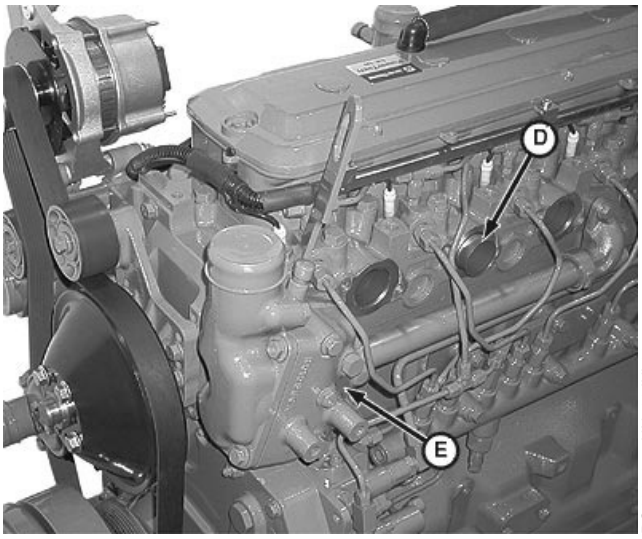

RG12171 –UN–03JUL02

Exhaust Port Sleeve, Coolant Tube and Thermostat Housing

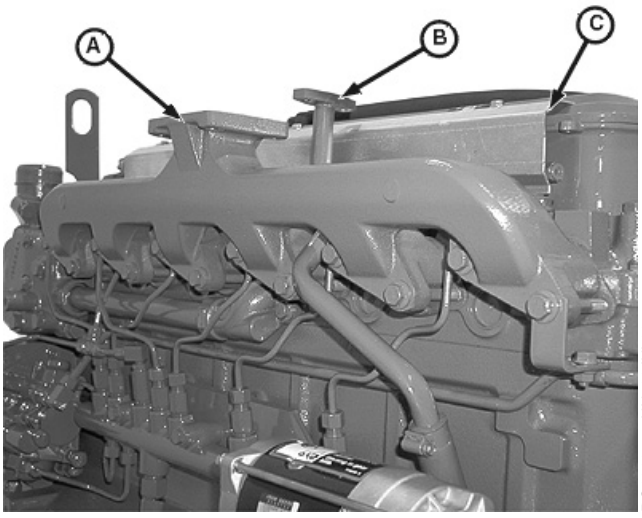

RG12167 –UN–03JUL02

Exhaust Manifold, Turbocharger Return Oil Line and Heat Shield

Continued on next page

17. If turbocharger was previously removed from exhaust manifold, install turbocharger to exhaust manifold. (See INSTALL TURBOCHARGER in Group 080.)

18. Connect turbocharger oil inlet line (A) and oil drain line (B). (See INSTALL TURBOCHARGER in Group 080.)

19. If engine oil was drained from crankcase, install new oil filter and fill engine with clean oil of correct grade and viscosity. (See Section 01, Group 002.)

20. Fill cooling system with clean coolant. (See Section 01, Group 002.)

21. Perform engine break-in. (See PERFORM ENGINE BREAK-IN in Group 010.)

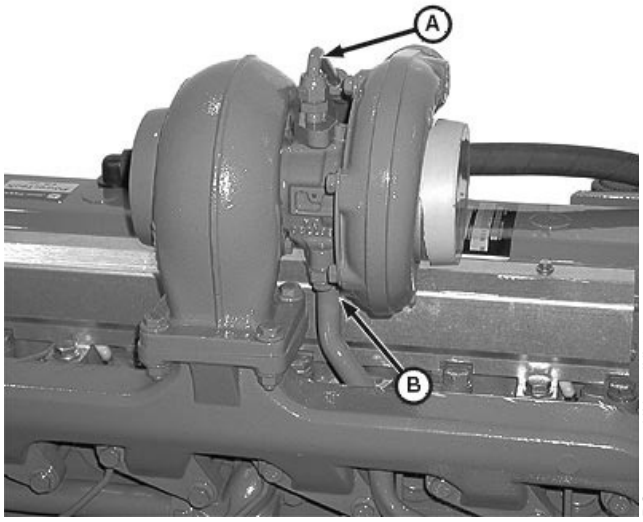

Turbocharger

A—Oil Inlet Line
B—Oil Drain Line

OUO1089,000022D –19–10DEC03–4/4

Connecting Rods—General Information

Earlier engines have the traditional tongue-and-groove between the connecting rod and cap (A). Later engines have the PRECISION JOINT™ rod and cap (B).

PRECISION JOINT™ rods and caps were introduced as follows:

Dubuque Built	
4.5 L Engines	(S.N. 793938—)
6.8 L Engines	(S.N. 794055—)
Saran Built	
RE500002 Rod	(S.N. 554036—)
RE500608 Rod	(S.N. 553937—)
Torreon Built	
RE500002 Rod	(S.N. 039708—)
RE500608 Rod	(S.N. 036628—)

To create the PRECISION JOINT™, the connecting rod is notched with a laser beam. Then a precision mandrel in the rod bore is powered to separate the cap from the rod at the joints (C).

Both types of rods provide a strong joint, and torque on cap screws is the same. Removal and installation is similar, with differences noted. See INSPECT ROD AND CAP and INSTALL PISTON AND CONNECTING ROD ASSEMBLY later in this group.

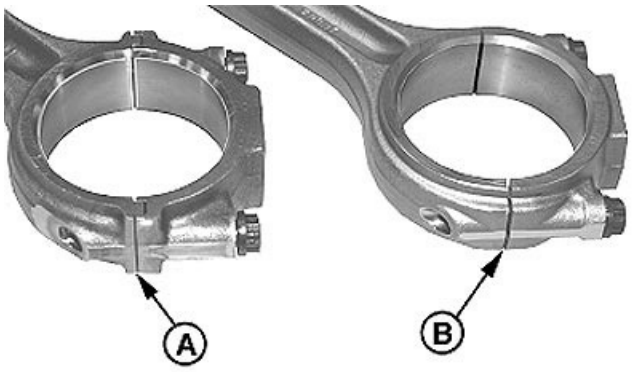

RG9447 –UN–27JUL98

Connecting Rods

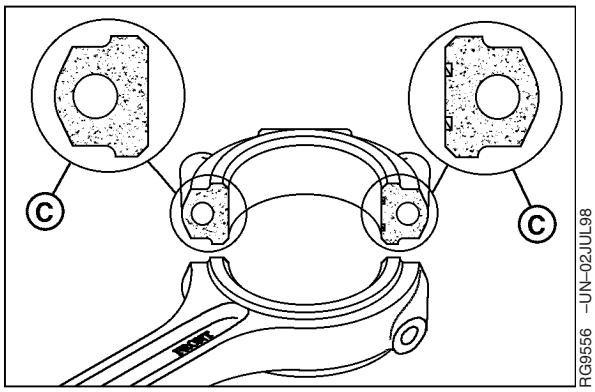

RG9556 –UN–02JUL98

Precision Joint™ Connecting Rod

A—Tongue-and-Groove Rod (Early Engines)
B—PRECISION JOINT™ Rod (Later Engines)
C—PRECISION JOINT™ Details

PRECISION JOINT is a trademark of Deere & Company

DPSG,OUO1004,165 –19–28SEP99–1/1

Remove Pistons and Connecting Rods

If engine is to be removed from the machine, see your machine technical manual.

02
030
2

CAUTION: Do not drain engine coolant until it cools below operating temperature. Then slowly loosen block drain valve to relieve any pressure.

1. Drain coolant and engine oil.

NOTE: If engine is to be completely disassembled, see ENGINE DISASSEMBLY SEQUENCE in Group 010.

2. Remove cylinder head. (See REMOVE CYLINDER HEAD in Group 020 for two valve head or REMOVE CYLINDER HEAD in Group 21 for four valve head.)

3. Remove camshaft followers and keep in order for reassembly in same position.

4. Clean all foreign material from cylinder block top deck.

RG,10,DT7421 –19–06JUN02–1/5

IMPORTANT: Cap screws and washers must be tightened to the correct specification to achieve an accurate reading when checking liner standout (height above block), as detailed later in this group.

5. Use short cap screws (A) and 3 mm (1/8 in.) thick washers (B) to bolt down cylinder liners (C). Fasten each liner in two locations. Tighten cap screws to 68 N•m (50 lb-ft).

NOTE: Do not rotate crankshaft with cylinder head removed unless liners are fastened down.

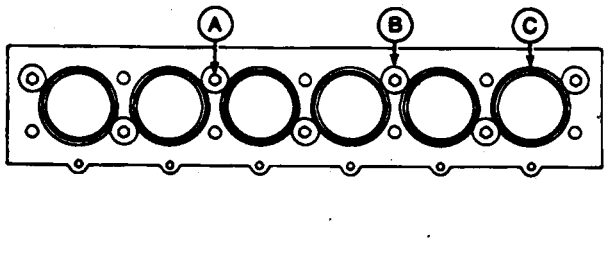

Cylinder Liner Hold-Down

A—Cap Screws
B—Washers
C—Liners

Continued on next page

RG,10,DT7421 –19–06JUN02–2/5

NOTE: Always follow manufacturer's directions provided with ridge reamer.

6. Remove carbon from liner bore with a scraper or ridge reamer (A). Use compressed air to remove loose material from cylinders.

A—Ridge Reamer

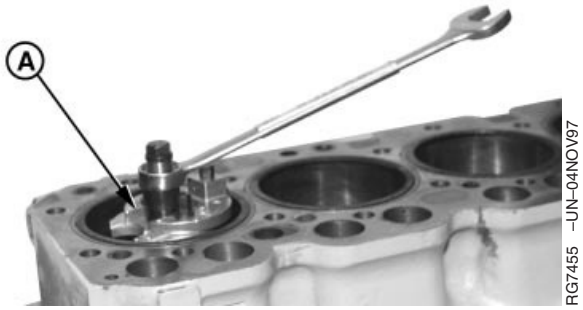

Using Ridge Reamer in Cylinder Bore

RG,10,DT7421 –19–06JUN02–3/5

7. Remove oil pan, oil pump, and pick-up tube. (See REMOVE, INSPECT AND INSTALL OIL PUMP PICK-UP TUBE ASSEMBLY in Group 060.) (See REMOVE ENGINE OIL PUMP in Group 060.)

8. Mark rods, pistons, and caps to ensure correct assembly in same location.

IMPORTANT: Keep inserts with their respective caps for rod and main bearings.

9. Remove all rod caps (A) with bearings.

10. Measure rod bearing-to-journal oil clearance with PLASTIGAGE® before removing piston and rod assembly. Record measurements. (See INSPECT AND MEASURE CONNECTING ROD BEARINGS, later in this group.)

NOTE: Use PLASTIGAGE® as directed by the manufacturer. PLASTIGAGE® will determine bearing-to-journal oil clearance, but will not indicate the condition of either surface.

A—Rod Caps

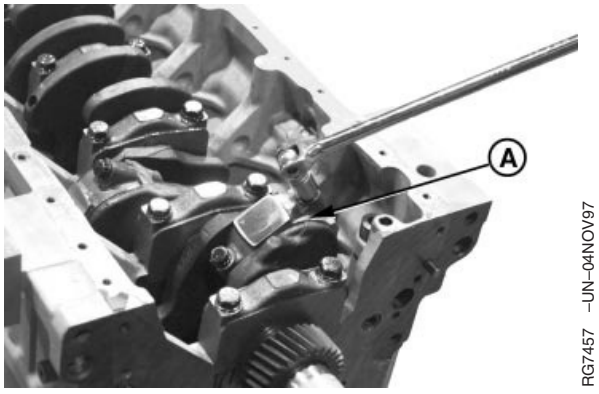

Bearing and Rod Cap Removal

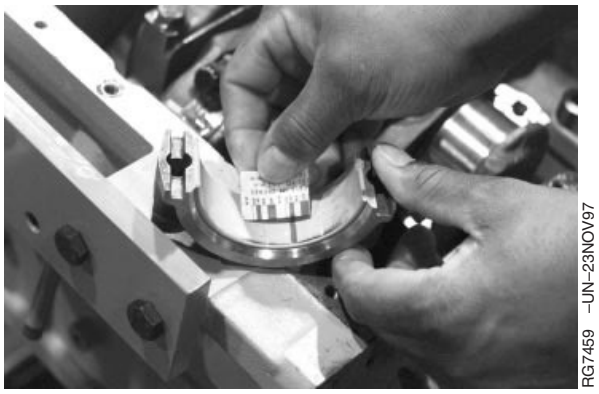

Measure Bearing Clearance

PLASTIGAGE is a registered trademark of the DANA Corp.

Continued on next page

RG,10,DT7421 –19–06JUN02–4/5

IMPORTANT: Hold onto piston to prevent piston from dropping. Piston will drop once piston rings have cleared cylinder liner.

If liners are to be reused, be extremely careful not to let connecting rod hit liner bore when removing piston and rod assembly.

11. Gently tap piston through top of cylinder block from the bottom.

12. Remove pistons and rods from engine.

13. If piston rings are to be reused, measure piston ring end gap and compare to the following specifications:

Piston Rings—4045DF, TF150 and 6068DF, TF150 Engines — Specification

No. 1 Compression—End Gap ..... 0.33—0.58 mm (0.013—0.023 in.)
No. 2 Compression—End Gap ..... 1.24—1.49 mm (0.049—0.059 in.)
No. 3 Oil Control—End Gap ..... 0.30—0.56 mm (0.011—0.022 in.)

Piston Rings—4045TF250 and 6068TF250 Engines—Specification

No. 1 Compression—End Gap ..... 0.33—0.64 mm (0.013—0.025 in.)
No. 2 Compression—End Gap ..... 0.75—1.00 mm (0.030—0.039 in.)
No. 3 Oil Control—End Gap ..... 0.33—0.64 mm (0.013—0.025 in.)

Heavy Duty Piston Rings—Specification

No. 1 Compression—End Gap ..... 0.33—0.59 mm (0.013—0.023 in.)
No. 2 Compression—End Gap ..... 0.89—1.14 mm (0.035—0.049 in.)
No. 3 Oil Control—End Gap ..... 0.33—0.59 mm (0.013—0.023 in.)

14. Remove all main bearing caps with bearings. Remove crankshaft from engine.

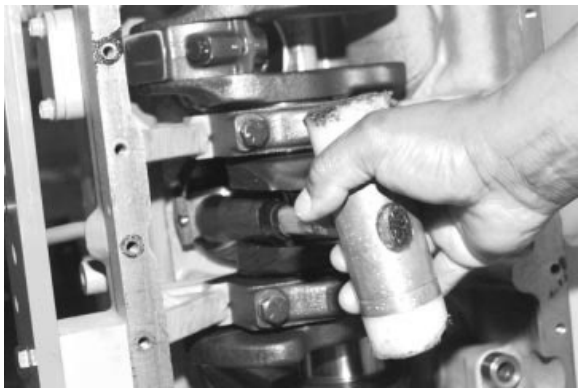

RG7460 –UN–23NOV97

Piston Removal

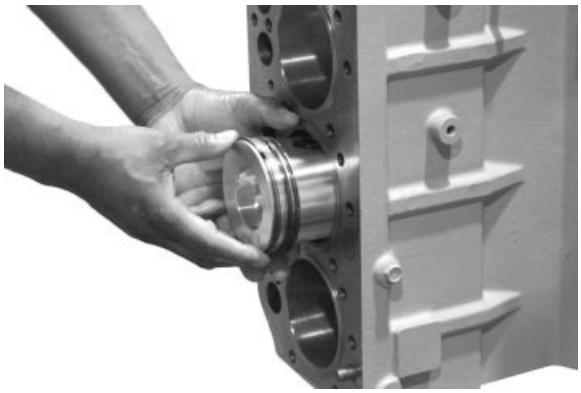

RG7934 –UN–05JAN98

Piston Removal

RG,10,DT7421 –19–06JUN02–5/5

Remove Cylinder Liners

IMPORTANT: Cap screws and washers must be tight to achieve an accurate liner height reading.

1. Using D17526CI (or D17527CI) Dial Indicator and JDG451 (or KJD10123) Height Gauge, measure height (A) of each liner at 1, 5, 7, and 11 o'clock positions as viewed from rear of engine. Record all measurements.

Specification	
Cylinder Liner—Height above Block	0.030—0.100 mm (0.001—0.004 in.)
Maximum Permissible Difference between Readings within One Cylinder or between Adjacent Cylinders	0.05 mm (0.002 in.)

2. Remove cap screws and washers securing liners to cylinder block.

IMPORTANT: DO NOT stamp top of piston. Piston may be damaged.

3. Number cylinder liners and pistons. Stamp front of liner to ensure correct assembly. Do not stamp liner flange; stamp on fire dam only.

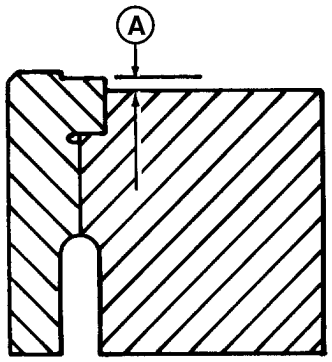

RG6439 –UN–03NOV97

Liner Standout



RG7461 –UN–23NOV97

Marking Cylinder Liner Location/Position

A—Liner Height

Continued on next page

RG,10,DT7420 –19–12NOV97–1/3

IMPORTANT: Keep matched pistons and liners together. Liners must be reinstalled in same cylinder bore.

4. Pull liners out of cylinder block with D01062AA, D01073AA, KCD10001 or JDG1145 Cylinder Liner Puller.

NOTE: If the KCD10001 Puller is used, secure puller with two cylinder head cap screws.

IMPORTANT: When using D01062AA (or D01073AA) Cylinder Liner Puller (B) to remove liners (A), be sure jaw (C) of puller is correctly positioned before attempting to remove liner. DO NOT over-tighten liner puller to remove liners. Doing so could easily break liners.

A—Liners
B—Cylinder Liner Puller
C—Jaw



Pulling Cylinder Liners Out of Block

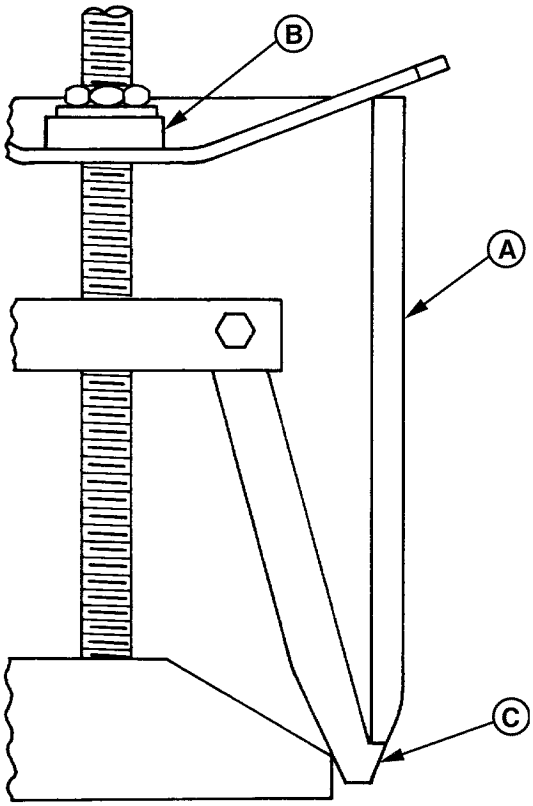

Cylinder Liner Puller

Continued on next page

RG,10,DT7420 –19–12NOV97–2/3

5. Remove cylinder liner O-rings (A) from grooves in cylinder block (B). Also remove packing (C) from cylinder liner (D).

A—O-Rings
B—Cylinder Block
C—Packing
D—Cylinder Liner

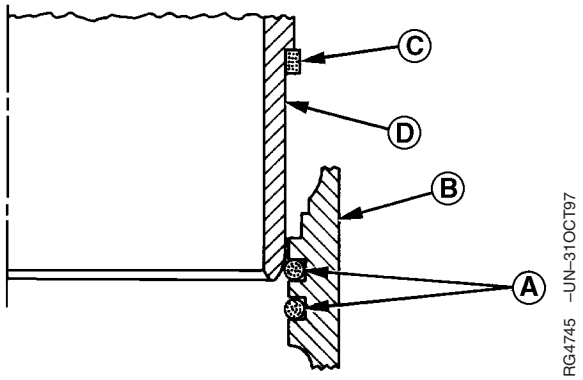

Cylinder Liner in Block Cutaway

RG,10,DT7420 –19–12NOV97–3/3

Complete Disassembly of Cylinder Block (If Required)

If not previously removed, also remove:

1. Crankshaft pulley. (See REMOVE PULLEY OR VIBRATION DAMPER AND PULLEY in Group 040.)
2. If equipped with spring, plunger and seat type oil pressure regulating valve, remove valve assembly. (See REMOVE AND INSTALL OIL PRESSURE REGULATING VALVE in Group 060.)
3. Timing gear cover, timing gears, and camshaft. (See REMOVE CAMSHAFT in Group 050.)
4. Camshaft bushing. (See REMOVE AND INSTALL CAMSHAFT BUSHING in Group 050.)
5. Balancer shafts and balancer shaft bushings (if equipped). (See REMOVE AND INSTALL BALANCER SHAFT BUSHINGS in Group 050.)
6. If equipped with cartridge type oil pressure regulating valve, remove valve. (See REMOVE AND INSTALL OIL PRESSURE REGULATING VALVE in Group 060.)
7. Front plate. (See REMOVE CYLINDER BLOCK FRONT PLATE in Group 050.)
8. Oil bypass valve. (See REMOVE, INSPECT AND INSTALL OIL BYPASS VALVE in Group 060.)
9. Main bearings. (See REMOVE CRANKSHAFT MAIN BEARINGS in Group 040.)
10. Crankshaft. (See REMOVE CRANKSHAFT in Group 040.)
11. Piston cooling orifices. (See REMOVE, INSPECT AND INSTALL PISTON COOLING ORIFICES in this group.)
12. Remove water gallery plugs.
13. If necessary to “Hot Tank” the block, also remove screw-in type oil gallery plugs and the engine serial number plate.

RG,10,DT7419 –19–29NOV99–1/1

Preliminary Liner, Piston and Rod Checks

Scuffed or Scored Pistons:

- Insufficient lubrication.
- Insufficient cooling.
- Improper piston-to-liner clearance.
- Coolant leakage in crankcase.
- Misaligned or bent connecting rod.
- Improperly installed piston.
- Low oil level.
- Improper operation.
- Incorrect connecting rod bearing clearance.
- Carbon build-up in ring groove.
- Improper break-in.
- Worn piston.
- Contaminated oil.
- Distorted cylinder liner.

Worn or Broken Compression Rings:

- Insufficient lubrication.
- Insufficient cooling.
- Improper ring installation.
- Improper combustion.
- Improper timing.
- Abrasives in combustion chamber.

Clogged Oil Control Ring:

- Improper oil.
- Excessive blow-by.
- Contaminated oil.
- Improper periodic service.
- Low operating temperature.

Dull Satin Finish and Fine Vertical Scratches on Rings:

Dirt and abrasive in air intake system.

Stuck Rings:

- Improper oil classification.
- Improper periodic service.
- Poor operating conditions.
- Coolant leakage in crankcase.
- Excessive cylinder liner taper.

Cylinder Liner Wear and Distortion:

- Incorrectly installed compression rings.
- Insufficient lubrication.
- Uneven cooling around liner.
- Improper piston-to-liner clearance.
- Liner bore damage.

Warped Cylinder Block:

Insufficient cooling.

Broken Connecting Rod:

- Inadequate piston-to-liner clearance.
- Worn connecting rod bearing.
- Distorted cylinder liner.
- Piston pin failure.

Piston Pin and Snap Ring Failure:

- Misaligned connecting rod.
- Excessive crankshaft end play.
- Incorrect snap rings.

Mottled, Grayish or Pitted Compression Rings:

Internal coolant leaks.

RG,10,DT7418 –19–12NOV97–1/1

Disassemble Piston and Rod Assembly

IMPORTANT: DO NOT reuse piston rings.

1. Remove piston rings using the JDE135 (shown), JDE85, or KJD10140 Piston Ring Expander.



Piston Ring Removal from Piston

RG,10,DT7417 –19–12NOV97–1/2

2. Remove and discard piston pin snap rings.

3. Separate piston and rod. Keep these parts in place with their respective cylinder liner.



Piston Pin Snap Ring Removal

RG,10,DT7417 –19–12NOV97–2/2

Clean Pistons

CAUTION: Always follow manufacturer's instructions and safety steps exactly.

1. Clean piston ring grooves using a piston ring groove cleaning tool.

IMPORTANT: When washing pistons, always use a stiff bristle brush—NOT A WIRE BRUSH—to loosen carbon residue.

DO NOT bead blast ring groove areas.

2. Clean pistons by any of the following methods:

   - Immersion-Solvent "D-Part".
   - Hydra-Jet Rinse Gun.
   - Hot water with liquid detergent soap.

   If cleaning with hot water and liquid detergent, soak pistons in a 50 percent solution of liquid household detergent and hot water for 30 to 60 minutes. Use a stiff bristle brush—NOT A WIRE BRUSH—to loosen carbon residue. Dry with compressed air.



RG7465 –UN–23NOV97

Cleaning Piston Ring Grooves

RG,10,DT7424 –19–12NOV97–1/1

Visually Inspect Pistons

Carefully inspect pistons under magnification. Check for:

- signs of fatigue
- fine cracks in the piston head (A)
- bent or broken ring lands (B)
- cracks in the skirt (C) at inner and outer ends of piston pin bore
- excessive piston skirt wear (original machining marks must be visible)

If any imperfections are found, replace the piston and liner as a set.

A—Piston Head
B—Ring Lands
C—Piston Pin Bore

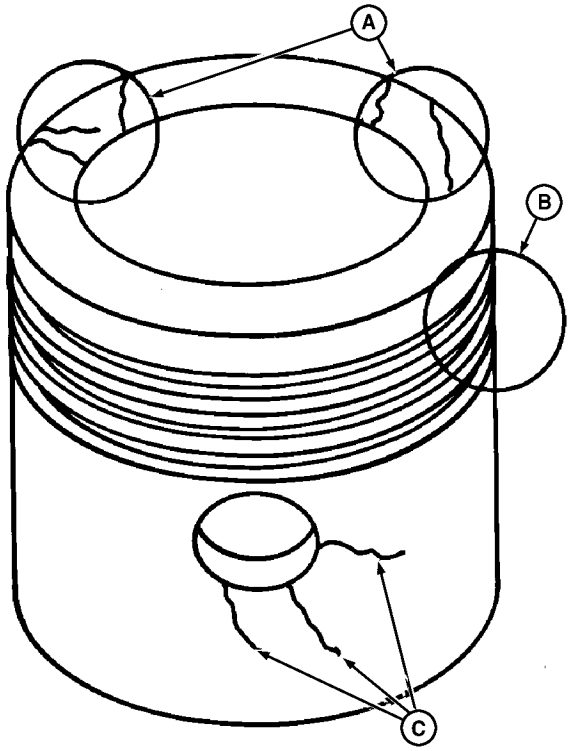

RG3326 RG3326 –UN–04DEC97

Piston (Defects Exaggerated)

RG,10,DT7416 –19–12NOV97–1/1

Clean Cylinder Liners

02
030
12

1. Use a stiff bristle brush to remove all debris, rust, and scale from OD of liners, under liner flange, and in O-ring packing areas. Make certain there are no nicks or burrs in areas where packings will seat.

IMPORTANT: Do not use gasoline, kerosene or commercial solvents to clean liners. Solvents will not remove all abrasives from liner walls.

2. Thoroughly clean liner ID with a 50 percent solution of hot water and liquid detergent.

3. Rinse thoroughly and wipe dry with a clean rag.

4. Swab out liner as often as necessary with clean SAE 10W oil. Clean liner until a clean, white rag shows no discoloration.

RG,10,DT7425 –19–12NOV97–1/1

Visually Inspect Cylinder Liners

IMPORTANT: If liner pitting has occurred, check condition of coolant.

NOTE: When installing reusable liners, rotate 90° from original position. The liners should be deglazed and ring sets installed in pistons.

1. Inspect exterior length of liner for pitting (A). Check packing step for erosion (B). If pitting or erosion is observed, measure depth of pits with a fine wire or needle. Replace piston and liner if:

   - Depth of any pit is one-half or more of liner thickness (C).
   - Depth of erosion is one-half or more of the packing step (D).

Specification	
Cylinder Liner—Thickness	6.23—6.89 mm (0.25—0.27 in.)
Cylinder Liner Packing Step—Dimension	2.02—2.29 mm (0.08—0.09 in.)

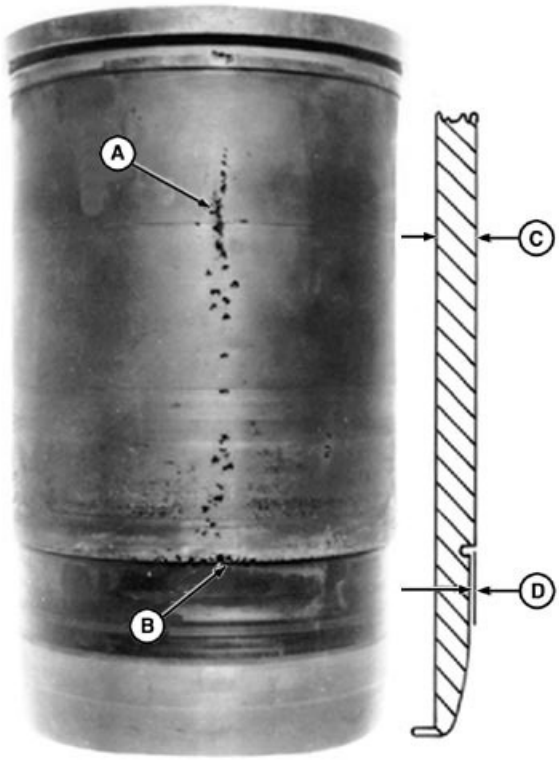

RG4643 –UN–05DEC97

Cylinder Liner Inspection

A—Liner Pitting
B—Liner Erosion
C—Liner Thickness
D—Packing Step

Continued on next page

RG,10,DT7415 –19–03JUN02–1/2

2. Visually inspect liner ID. Replace piston and liner if:
   - The crosshatch honing pattern is not visible immediately below the top ring turn-around area for turbocharged engines.
   - The hone pattern is not visible all the way around the liner in over 75 percent of the ring travel area for naturally aspirated engines.
   - Liners are pitted or contain deep vertical scratches that can be detected by the fingernail.
3. Carefully examine liner for signs of fatigue, such as fine cracks in the flange area (A) and cracks in the ring travel area (B).

NOTE: Inspect block for cracks or erosion in the O-ring packing areas. (See INSPECT AND CLEAN CYLINDER BLOCK later in this group.)

A—Flange Area
B—Ring Travel Area

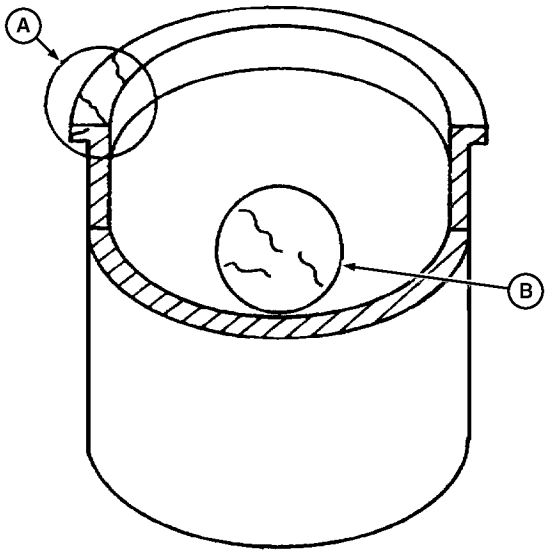

(Exaggerated defects)

RG1188 –UN–04DEC97

Cylinder Liner

RG,10,DT7415 –19–03JUN02–2/2

Check Piston Ring Groove Wear

Pistons with 15° keystone ring will use JDE62 Ring Groove Wear Gauge and pistons with 6° keystone ring will use JDG957 Ring Groove Wear Gauge.

1. Use the appropriate ring groove wear gauge (C) to check wear of keystone ring groove (top groove). Check grooves at several locations around the circumference of piston.

   Gauge shoulders should not contact ring land. Clearance (D) between shoulders of tool and ring land indicate ring groove is good.

   If ring groove is worn, replace piston and liner as a matched set. If ring groove is good, proceed to next step.

A—Piston with Good Keystone Ring Groove
B—Piston with Worn Keystone Ring Groove
C—Ring Groove Wear Gauge
D—Clearance (Normal)
E—No Clearance (Replace)

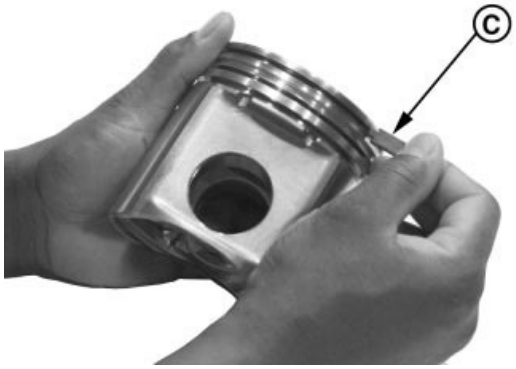

RG7467 –UN–04NOV97

Piston Ring Groove Wear Gauge

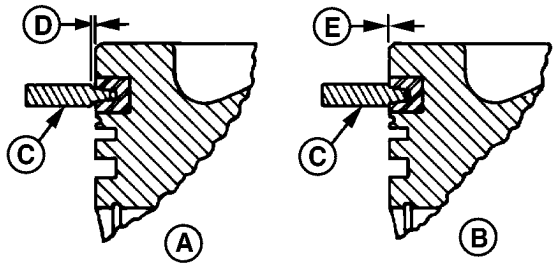

RG9059 –UN–16MAR98

Piston Ring Grooves

Continued on next page

RG,10,DT7414 –19–19DEC03–1/2

2. Check second (Compression) ring groove using new piston ring and a feeler gauge. Measure clearance at several points. Compare measurements with specifications.

3. Check third (Oil Control) ring groove using proper new piston ring and a feeler gauge. Measure clearance at several points. Compare measurements with specifications.

Specification	
Piston Ring-to-Groove Clearance—New Piston Ring (Second Compression Ring Groove)—Maximum Clearance	0.20 mm (0.008 in.)
Piston Ring-to-Groove Clearance—New Piston Ring (Third Oil Control Ring Groove, Standard Ring)—Maximum Clearance	0.82 mm (0.032 in.)
Piston Ring-to-Groove Clearance—New Piston Ring (Third Oil Control Ring Groove, Heavy Duty Ring)—Maximum Clearance	0.15 mm (0.006 in.)

4. Replace piston and liner (as a set) if clearance exceeds specification.



Piston Ring Groove Wear

RG,10,DT7414 –19–19DEC03–2/2

Measure Piston Pin Bore

Measure piston pin bore. If bore is not within specification, replace piston and liner set.

Specification	
Piston Pin Bore (Small Pin)—ID	34.935—34.945 mm (1.3754—1.3758 in.)
Piston Pin Bore (Large Pin)—ID	41.285—41.295 mm (1.6254—1.6258 in.)

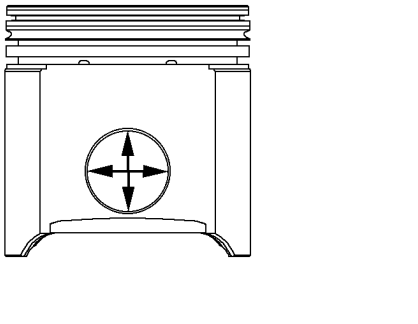

Piston Pin Bore

RG,10,DT7413 –19–12NOV97–1/1

Measure Piston Skirt

1. Measure piston skirt (A) 90° to piston pin bore and 28 mm (1.1 in.) from bottom of piston (B). Record measurement.

Specification

Piston Skirt (Measurement Taken at Bottom of Skirt 28 mm [1.1 in.] from Bottom of Piston)—Diameter	106.38—106.40 mm (4.188—4.189 in.)

2. Measure cylinder liner as directed later in this group and compare with piston measurement.

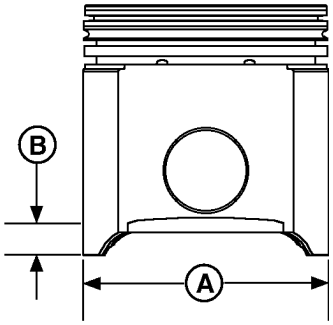

RG7403 –UN–03NOV97

Piston Skirt Wear

A—Piston Skirt
B—Measurement Area

RG,10,DT7412 –19–12NOV97–1/1

Measure Piston Height

Measure piston height from center of piston pin bore-to-top of piston.

Piston (Two Valve Head Engines)—Specification

Piston—Height (Measured from Center of Pin Bore to Top of Piston)	71.64—71.70 mm (2.820—2.823 in.)

Piston (Four Valve Head Engines)—Specification

Piston—Height (Measured from Center of Pin Bore to Top of Piston)	71.60—71.65 mm (2.819—2.820 in.)

DPSG,OUO1004,212 –19–04JUN02–1/1

Determine Piston-to-Liner Clearance

1. Measure skirt OD (A) at right angles to piston pin bore, 28 mm (1.1 in.) from the bottom of the piston (B).
2. Record measurement and compare measurement obtained from matching liner.

02
030
18

Specification

Piston Skirt—OD 28 mm (1.1 in.)
from Bottom of Piston ..... 106.38—106.40 mm
(4.188—4.189 in.)

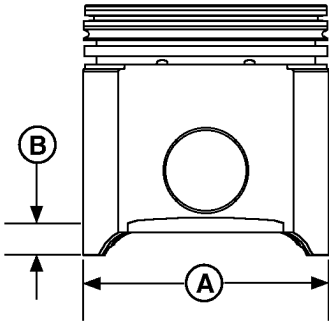

RG7403 –UN–03NOV97

Measuring Piston Skirt

A—Skirt OD
B—Bottom of Piston Dimension

Continued on next page

DPSG,OUO1004,1169 –19–23NOV99–1/2

IMPORTANT: ALWAYS measure liners at room temperature.

3. Measure liner bore parallel to piston pin at top end of ring travel (A).
4. Measure bore in same position at bottom end of ring travel (B).
5. Measure bore at right angle to piston pin at top end of ring travel (C).
6. Measure bore in same position at bottom end of ring travel (D).
7. Compare measurements A, B, C, and D to determine if liner is tapered or out-of-round.
8. Compare liner ID with matched piston OD. Replace piston and liners (as a set) if they exceed wear specifications given.

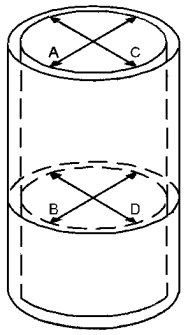

RG10049 –UN–07JAN03

Measuring Liner ID

Specification	
Cylinder Liner—ID	106.48—106.52 mm (4.192—4.194 in.)
Cylinder Liner (Top or Bottom)—Maximum Out-of-Round	0.05 mm (0.002 in.)
Cylinder Liner—Maximum Taper	0.05 mm (0.002 in.)
Piston-to-Liner Clearance (Measured at Bottom of Piston Skirt) (Naturally Aspirated Engines)—Clearance	0.08—0.14 mm (0.003—0.005 in.)
Piston-to-Liner Clearance (Measured at Bottom of Piston Skirt) (Turbocharged Engines)—Clearance	0.08—0.15 mm (0.003—0.006 in.)

DPSG,OUO1004,1169 –19–23NOV99–2/2

Deglaze Cylinder Liners

1. Secure cylinder liner in a holding fixture. (See Dealer Fabricated Service Tools, Section 05, Group 190 for assembly of holding fixture.)
2. Use D17004BR Flexible Cylinder Hone to deglaze cylinder liner.

NOTE: Use honing oil along with flex hone when deglazing liners.



RGR26164 –UN–11DEC97

Cylinder Liner Deglazing

RG,10,DT7410 –19–12NOV97–1/2

3. Use D17004BR Hone according to instructions supplied with tool to obtain a 45° cross-hatch pattern.

   Thoroughly clean liners after deglazing. See CLEAN CYLINDER LINERS earlier in this group for proper cleaning procedures.

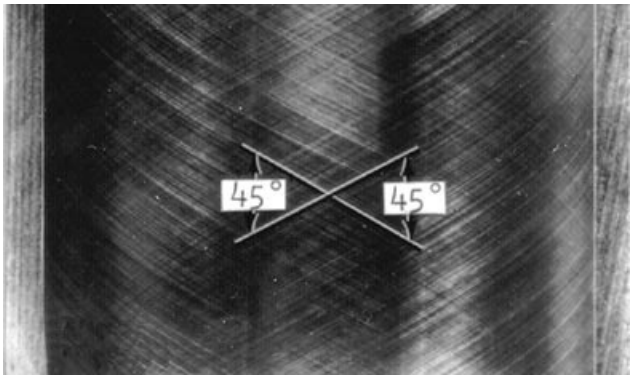

RGR26165 –UN–11DEC97

Cylinder Liner Honing

RG,10,DT7410 –19–12NOV97–2/2

Replace Piston and Liner Sets

IMPORTANT: ALWAYS install a new (matched set) liner when replacing a piston. DO NOT stamp top of piston. Piston may be damaged.

Mark matched piston and liner for placement in the same cylinder location.

RG,10,DT7426 –19–12NOV97–1/1

Inspect and Measure Connecting Rod Bearings (Rods Removed from Engine)

1. Inspect rod bearings for damage or wear.

2. Measure crankshaft rod journal OD at several points.

Specification

Crankshaft Journal—OD ..... 77.800—77.826 mm (3.0629—3.0640 in.)

3. Assemble connecting rod, cap, and bearings with OLD cap screws. Tighten cap screws to 58 N•m (43 lb-ft). Tighten cap screws an additional 90—100°. (See TORQUE-TURN CONNECTING ROD CAP SCREWS later in this group.)

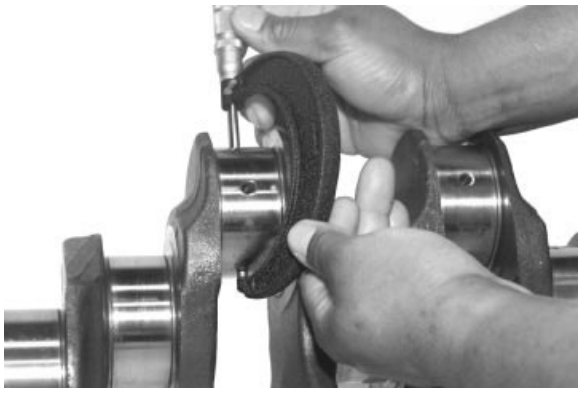

Measure Crankshaft Rod Journal

RG,10,DT7409 –19–12NOV97–1/2

4. Measure assembled rod bearing ID.

Specification

Assembled Rod Bearing—ID ..... 77.876—77.927 mm (3.0659—3.0679 in.)

5. Subtract crankshaft journal OD from rod bearing ID to determine oil clearance. Replace bearings if oil clearance is out of specification.

Specification

Connecting Rod
Bearing-to-Journal (New Parts)—
Oil Clearance..... 0.050—0.127 mm (0.0020—0.0050 in.)
Wear Limit ..... 0.152 mm (0.0060 in.)



Measuring Rod Bearing ID

RG,10,DT7409 –19–12NOV97–2/2

Inspect and Measure Connecting Rod Bearings (Rod and Crankshaft in Engine)

IMPORTANT: Use hand wrenches. Pneumatic wrenches may cause thread damage.

NOTE: Use PLASTIGAGE® as directed by manufacturer. PLASTIGAGE® will determine oil clearance, but will not indicate condition of either surface.

1. Remove rod cap. Place a piece of PLASTIGAGE® in center of bearing. Install rod cap using OLD cap screws. Tighten cap screws to 58 N•m (43 lb-ft). Tighten cap screw an additional 90—100°. (See TORQUE-TURN CONNECTING ROD CAP SCREWS later in this group.)
2. Remove rod cap. Compare width of PLASTIGAGE® with scale provided on package to determine clearance. Replace bearings if oil clearance is out of specification.

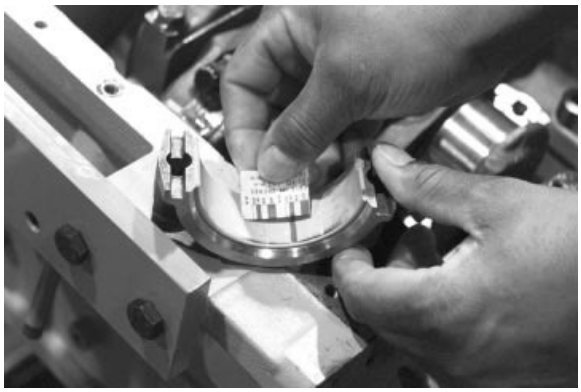

RG7459 –UN–23NOV97

Measure Rod Oil Clearance

PLASTIGAGE is a registered trademark of the DANA Corp.

DPSG,OUO1004,52 –19–16APR98–1/1

Inspect Rod and Cap

1. Inspect rod and cap for wear or damage, such as chips or nicks in the joint area (A).

IMPORTANT: Do not nick the joint surfaces of the rod and cap. This is very critical on PRECISION JOINT™ rods to ensure proper seating. Never scrape these surfaces (C) with a wire brush or other tool. The interlocking mating surfaces must be preserved.

2. Inspect in and around cap screw holes (B) in cap. If any imperfections are found, replace rod and cap.

3. Carefully clamp rod in a soft-jawed vise (cap end upward).

IMPORTANT: Never use new connecting rod cap screws when checking rod bore ID. Use new cap screws only for final assembly of connecting rods.

4. Install cap WITHOUT bearing inserts. Use old cap screws.

5. Tighten cap screws to 58 N•m (43 lb-ft). Turn cap screws an additional 90—100°. See TORQUE-TURN CONNECTING ROD CAP SCREWS later in this group.

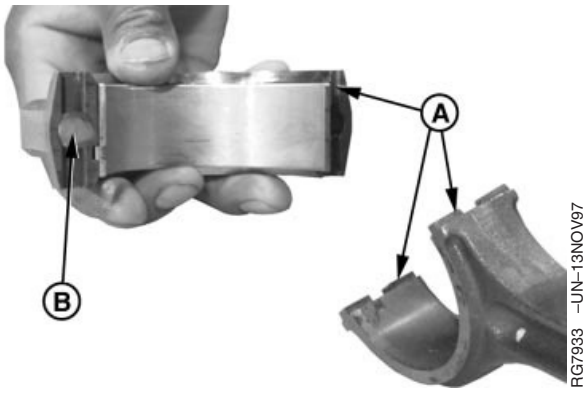

Tongue-and-Groove Rod and Cap

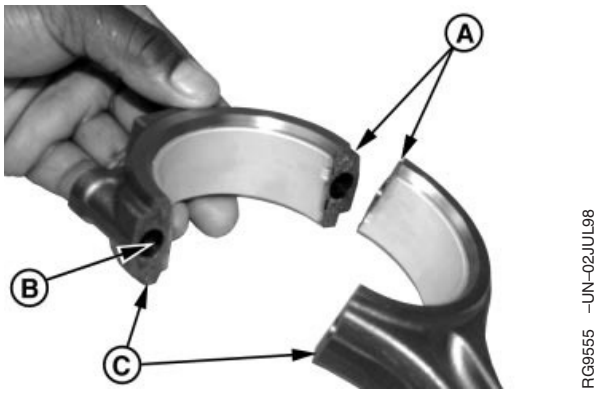

PRECISION JOINT™ Rod and Cap

A—Joint Area
B—Cap Holes
C—PRECISION JOINT™ Surfaces

PRECISION JOINT is a trademark of Deere & Company

Continued on next page

RG,10,DT7408 –19–12NOV97–1/2

6. Using an inside micrometer, measure rod bore at center of bore and record measurements as follows:
   - At right angle to rod-to-cap joint (A).
   - At 45 degrees left of measurement step “A” (B).
   - At 45 degrees right of measurement step “A” (C).
7. Compare measurements to specifications.

Specification	
Connecting Rod Bore (Without Bearing Inserts)—ID	82.677—82.703 mm (3.2550—3.2560 in.)

8. If difference between the greatest and least measurement exceeds out-of-round specification, replace connecting rod.

Specification	
Connecting Rod Bore—Maximum Permissible Out-of-Round	0.038 mm (0.0015 in.)

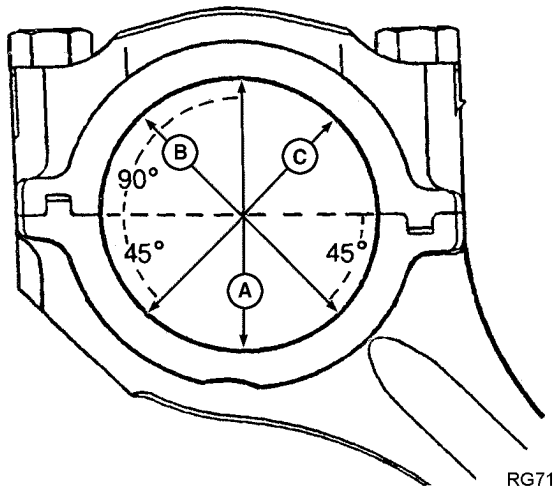

RG7140 –UN–05DEC97

Measuring Rod Bearing ID

RG,10,DT7408 –19–12NOV97–2/2

Inspect Piston Pins and Bushings

1. Visually inspect piston pin. Pin must be in good condition with no visible wear.

IMPORTANT: Do not attempt to polish or refinish piston pin. Pin has a highly polished surface.

2. Dip piston pin in clean engine oil.

3. Install pin (A) through piston. Pin should pass through piston using only light thumb pressure.

4. Insert pin from both sides. If pin enters freely, but binds in the center, the bore could be tapered (B).

5. Insert pin to check for bore alignment (C). Pin should not “click” or need to be forced into bore on opposite side.

6. Measure piston pin OD. Replace if not within specification.

Specification

Piston Pin (Small)—OD	34.920—34.930 mm (1.3748—1.3752 in.)
Wear Limit	34.907 mm (1.3743 in.)
Piston Pin (Large)—OD	41.270—41.280 mm (1.6248—1.6252 in.)
Wear Limit	41.257 mm (1.6243 in.)
Piston Pin—Length	71.51—72.11 mm (2.815—2.839 in.)

A—Piston Pin
B—Tapered Bore
C—Bore Alignment



RG7466 –UN–04NOV97

Piston Pin and Bushing

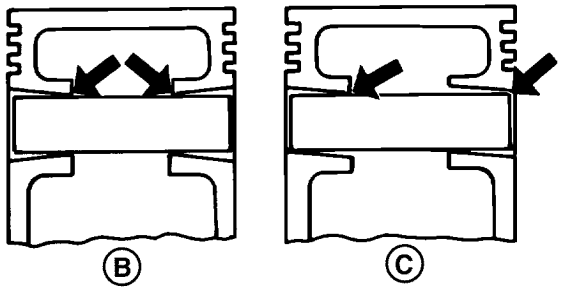

RG4747 –UN–31OCT97

Piston Pin Wear Points

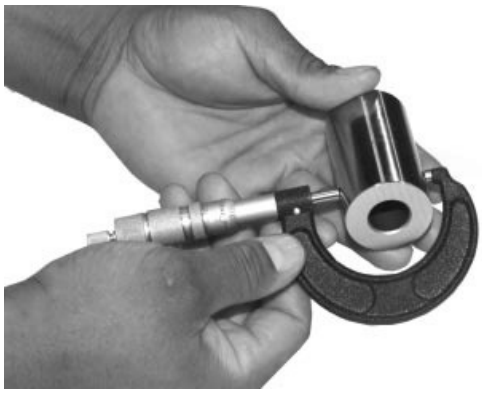

RG7473 –UN–23NOV97

Measuring Piston Pin OD

Continued on next page

RG,10,DT7407 –19–12NOV97–1/2

NOTE: Straight-end rods have an oil hole; tapered-end rods do not.

7. Lubrication hole must be open.

8. Measure pin bushing ID and compare to pin OD to determine oil clearance.

Specification	
Piston Pin Bushing Installed (Small Pin)—ID	34.950—34.976 mm (1.3760—1.3770 in.)
Wear Limit	35.026 mm (1.3790 in.)
Piston Pin Bushing Installed (Large Pin)—ID	41.300—41.326 mm (1.6260—1.6270 in.)
Wear Limit	41.376 mm (1.6290 in.)
Piston Pin-to-Bushing—Oil Clearance	0.020—0.056 mm (0.0008—0.0022 in.)
Wear Limit	0.102 mm (0.0040 in.)



RG7474 –UN–23NOV97

Measuring Connect Rod Pin Bore ID

9. Insert pin from either side of rod bushing. If pin is free on one end, but tight on the other, the bore could be tapered (A). If pin enters freely from both sides, but is tight in the center, bore is bell mouthed (B).

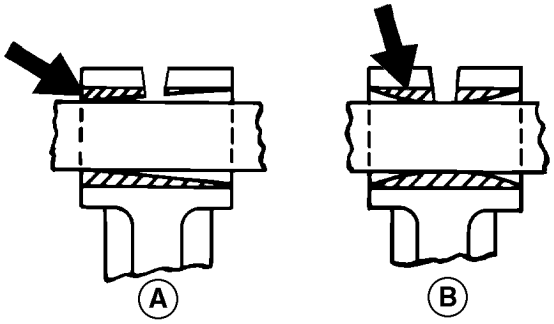

RG7647 –UN–07NOV97

Piston Pin Wear Points in Connecting Rod

A—Tapered Bore
B—Bell Mouthed Bore

RG,10,DT7407 –19–12NOV97–2/2

Remove Piston Pin Bushing

Removing Piston Pin Bushing on Straight Pin-End Rod

Use JD286 (JD-286)[1] Piston Pin Bushing Remover and Installer for 41 mm (1.6 in.) pin, or JDE88 Piston Pin Bushing Remover and Installer for 35 mm (1.3 in.) pin to remove bushing.

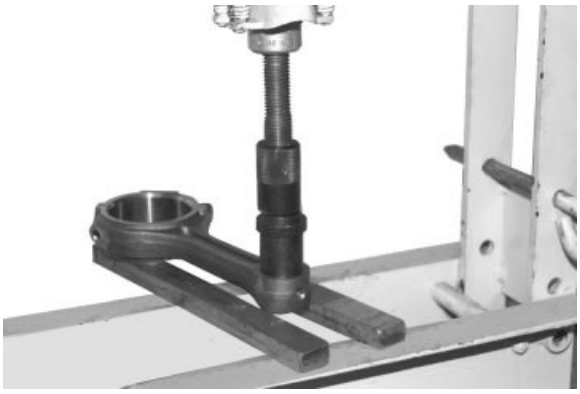

RG7476 –UN–23NOV97

Straight Pin-End Rod

[1]Order JD-286 when tool is ordered from European Parts Distribution Center (EPDC)

Continued on next page

RG,10,DT7406 –19–12NOV97–1/2

Removing Piston Pin Bushing on Tapered Pin-End Rod

1. Select JDG953-1 Driver (A) and JDG953-2 Receiver Cup (B) from JDG953 Connecting Rod Bushing Service Set to remove bushing (C) from tapered rod.
2. Slide driver into one side of rod bushing. Turn driver until taper on driver flange matches up with taper on the bushing.
3. Install receiver cup onto opposite side of rod bushing.

NOTE: Stud in cup keeps rod properly located on the cup.

IMPORTANT: If bushing is heavily worn, the driver may contact the ID of the rod bore. Be careful not to damage the rod bore.

4. Using hydraulic press, press bushing out of the rod until driver and bushing fall into receiver cup.
5. Clean, inspect, and measure ID of rod pin bore, as described later in this group.

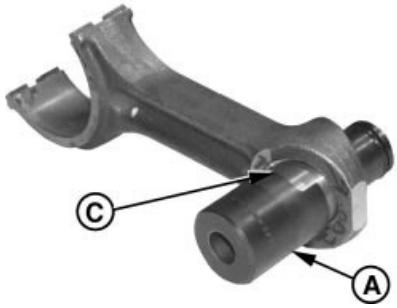

RG7475 –UN–04NOV97

Tapered Pin-End Rod

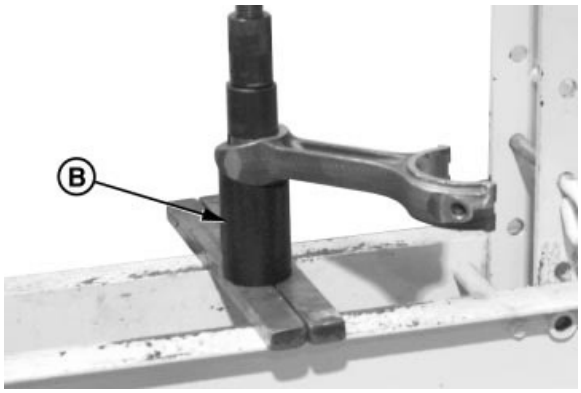

RG7477 –UN–04NOV97

Tapered Pin-End Rod

A—JDG953-1 Driver
B—JDG953-2 Receiver Cup
C—Bushing

RG,10,DT7406 –19–12NOV97–2/2

Clean and Inspect Connecting Rod Pin Bore

1. Clean bore of rod with medium grit emery cloth.
2. Inspect for cracks or other damage. Make sure that lube oil hole in top of straight pin-end rod is open.

IMPORTANT: If bushing has spun in rod, replace connecting rod.

3. Measure bore diameter in two places, 90° apart. Replace rod if not within specification.

Specification

Connecting Rod Small Pin Bore (Bushing Removed)—ID	38.087—38.113 mm (1.4995—1.5005 in.)
Connecting Rod Large Pin Bore (Bushing Removed)—ID	46.025—46.051 mm (1.8120—1.8130 in.)

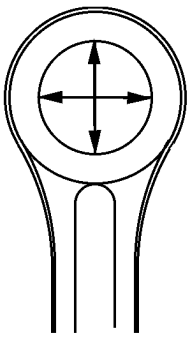

RG7478 –UN–23NOV97

Connecting Rod Pin Bore

RG,10,DT7405 –19–12NOV97–1/1

Install Piston Pin Bushing in Connecting Rod

Carefully file a slight chamfer on edge of rod pin bore. Remove any burrs or sharp edges from edge of bushing bore.

NOTE: Tapered pin-end rods do not have a lubrication hole in the rod or bushing.

Installing Piston Pin Bushing in Tapered Pin-End Rod

NOTE: JDG953-1, JDG953-2 and JDG738-2 are contained in JDG953 Connecting Rod Bushing Service Set.

1. Slide bushing (A) onto JDG953-1 Driver (B) and install JDG738-2 Installer Pilot (C) onto O-ring end of driver. Apply clean engine oil or grease to OD of new bushing, OD of pilot ring, and ID of rod pin bore.
2. Insert driver into rod pin bore so pilot ring pilots in rod bore, and bushing taper aligns with taper on driver flange.
3. Install JDG953-2 Receiver Cup (D) onto the opposite side of rod.
4. Press bushing into rod bore until edge of bushing is flush or just slightly below rod face.
5. If necessary, have the new bushing reamed by a specialized machine shop to obtain specified oil clearance with piston pin.

Specification

Connecting Rod Pin-to-Bushing (Tapered Pin-End)—Oil Clearance	0.020—0.056 mm (0.0008—0.0022 in.)

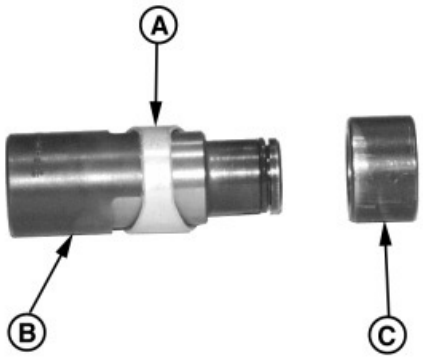

RG7480 –UN–04NOV97

Piston Pin Bushing in Installation Tool

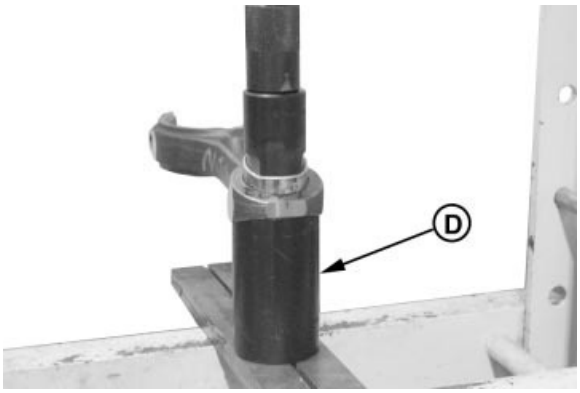

RG7481 –UN–04NOV97

Receiver Cup on Connecting Rod

A—Piston Pin Bushing
B—JDG953-1 Driver
C—JDG738-2 Installer Pilot
D—JDG953-2 Receiver Cup

Continued on next page

RG,10,DT7404 –19–12NOV97–1/2

Installing Piston Pin Bushing in Straight Pin-End Rod

IMPORTANT: Oil holes (A) MUST be aligned. If holes are not aligned, remove and discard bushing. Install a new bushing. DO NOT attempt to reuse the bushing. Install bushing in rod.

1. Use JD286 (JD-286)[1]Piston Pin Bushing Remover and Installer for 41 mm (1.6 in.) pin or JDE88 Piston Pin Bushing Remover and Installer for 35 mm (1.3 in.) pin to install bushing.
2. Press bushing into rod bore until edge of bushing is flush or just slightly below machined surface on face of rod.
3. Remove rod from press.
4. ID of new bushing must be precision bored by specialized machine shop to specifications.

Specification	
Connecting Rod Pin-to-Bushing (Straight Pin-End)—Oil Clearance	0.020—0.056 mm (0.0008—0.0022 in.)
Wear Limit	0.102 mm (0.0040 in.)

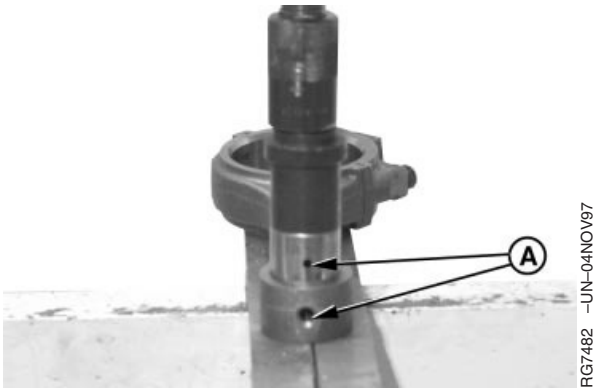

Piston Pin Bushing and Rod Oil Holes

A—Oil Holes

[1]Order JD-286 when tool is ordered from European Parts Distribution Center (EPDC)

RG,10,DT7404 –19–12NOV97–2/2

Measure Rod Center-to-Center Bores

Measure rod center-to-center bores (A). Compare to specifications given below. Replace rod if necessary.

Specification	
Rod Bearing Bore-to-Piston Pin Bushing Bore (Center-to-Center)—Measurement	202.95—203.05 mm (7.990—7.994 in.)

A—Center-to-Center Measurement

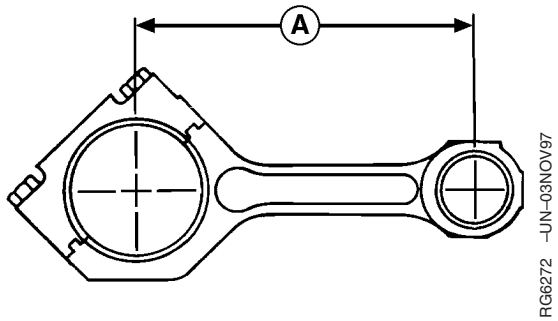

Measure Rod Center-to-Center Bores

RG,10,DT7403 –19–20NOV03–1/1

Inspect and Clean Cylinder Block

Before inspecting and cleaning cylinder block, remove all of the following:

- piston cooling orifices (A) (see REMOVE, INSPECT AND INSTALL PISTON COOLING ORIFICES later in this group)
- soft plugs (B)
- oil gallery plugs (C) (using JDG782A Oil Gallery Plug Tool)
- all external and internal mounted components (refer to the proper group for removal procedures)

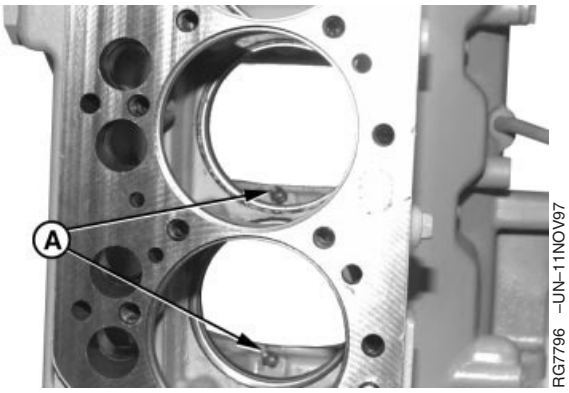

Cylinder Block Piston Cooling Orifice

IMPORTANT: If block is cleaned in a hot tank, be sure to remove any aluminum parts such as nameplates (D). Aluminum parts can be damaged or destroyed by hot tank solutions.

1. Clean block thoroughly using cleaning solvent, pressure steam, or a hot tank.
2. All passages and crevices must be clear of sludge, and grease.
3. All coolant passages must be clear of lime deposits and scale.



Cylinder Block Plug and Nameplate

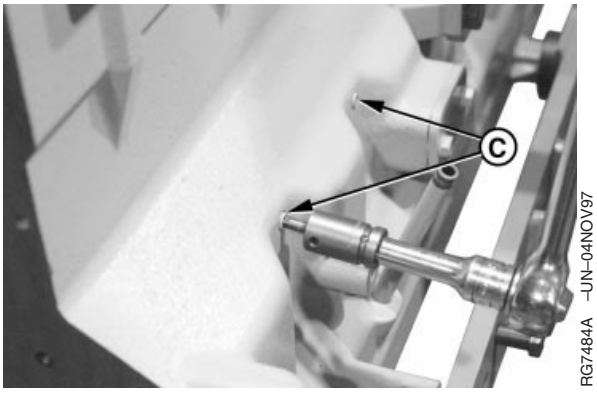

Cylinder Block Oil Gallery Plug

A—Piston Cooling Orifice
B—Soft Plug
C—Oil Gallery Plug
D—Nameplate

Continued on next page

RG,10,DT7402 –19–29NOV99–1/3

IMPORTANT: DO NOT file liner support flange excessively. Excess filing can damage liner support flange and allow an improper liner fit. Thoroughly clean all filings from cylinder block.

4. Inspect liner support flange (A) for burrs. If burrs are present, use a small half-moon file and LIGHTLY file (in a circular motion) burr off at a 60° angle. DO NOT let file hit top of cylinder block while filing.

5. Carefully inspect block for cracks or damage. If a cracked block is suspected, pressure-test the block. A procedure for pressure testing is outlined in FOS (Fundamentals of Service) Manual—ENGINES. Check for erosion or cracks in the liner O-ring/packing area (B). Replace cracked or damaged blocks.

6. If cylinder block is serviceable, clean out all threaded holes for cylinder head mounting cap screws in top deck of cylinder block, using JDG680 Tap (C) or an equivalent 1/2-13 UNC-2A x 76 mm (3.0 in.) long tap. Remove debris or fluid from tapped holes with compressed air.

7. After service of cylinder block, reinstall piston cooling orifices. (See REMOVE, INSPECT AND INSTALL PISTON COOLING ORIFICES later in this group.)

A—Liner Support Flange
B—O-Ring/Packing Area
C—JDG680 Tap

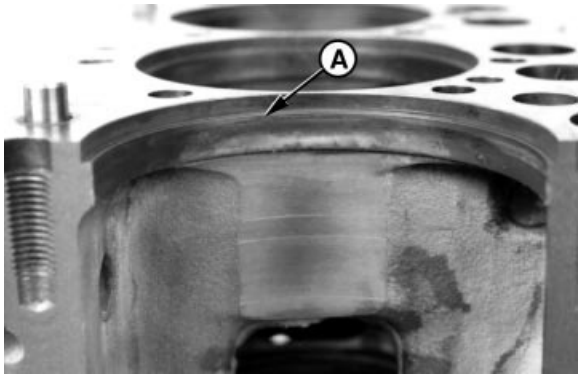

Liner Support Flange

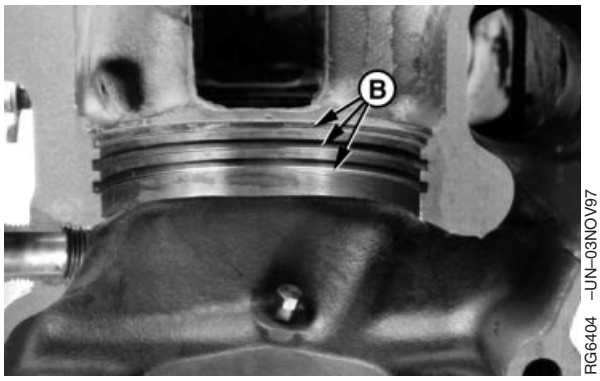

Liner O-Ring/Packing Area

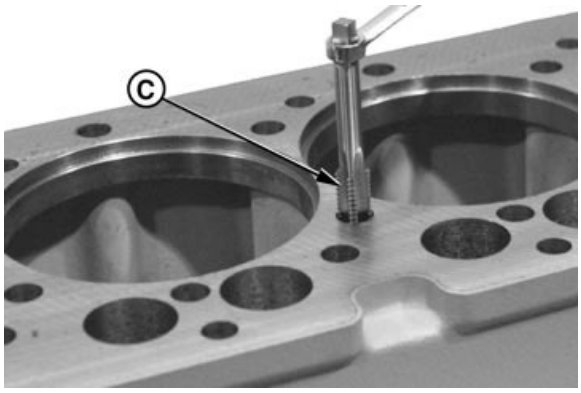

Cleaning Threaded Holes in Cylinder Block

Continued on next page RG,10,DT7402 –19–29NOV99–2/3

8. Apply LOCTITE® 277 to steel caps/soft plugs and install caps in block.

9. Apply LOCTITE® 242 Thread Lock and Sealer (Medium Strenght) to oil gallery plugs. Install plugs and tighten to specifications below.

10. Apply LOCTITE® 592 Pipe Sealant with TEFLON® to coolant gallery plugs. Install plugs and tighten to specifications.

Cylinder Block Oil and Coolant Gallery Plugs—Specification

1/2 in. Plug (W/O Turbocharger, Return Port)—Torque	45 N•m (33 lb-ft)
1/4 in. Plug (Coolant Gallery)—Torque	17 N•m (150 lb-in.)
1/8 in. Plug (Oil Gallery)—Torque	17 N•m (150 lb-in.)
3/8 in. Plug (Oil Gallery)—Torque	45 N•m (33 lb-ft)
1-5/8 in. Steel Plug (Coolant Gallery)[1]—Torque	60 N•M (44 lb-ft)
1-5/8 in. Composite Plug (Coolant Gallery)[2]—Torque	30 N•m (22 lb-ft)
1-5/8 in. Steel Square Socket Head Plug (Coolant Gallery)—Torque	35 N•m (26 lb-ft)

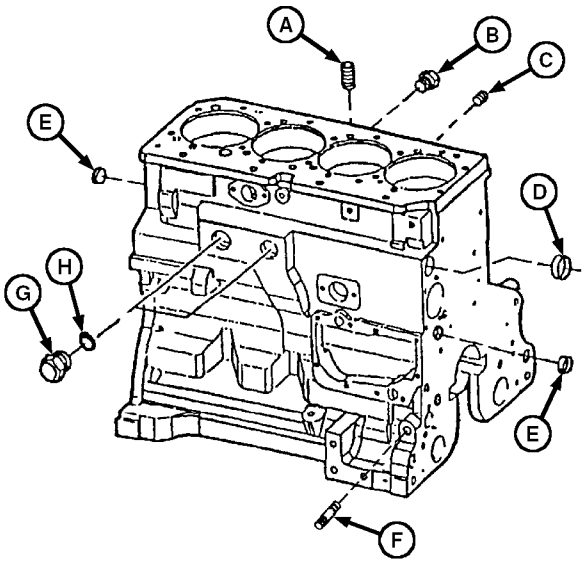

RG10384 –UN–19NOV99

Cylinder Block Plugs and Caps

A—1/2 in. Plug (W/O Turbocharger, Return Port)
B—1/4 in. Plug (Coolant Gallery)
C—1/8 in. Plug (Oil Gallery)
D—Cap
E—Cap
F—3/8 in. Plug (Oil Gallery)
G—1-5/8 in. Plug (Coolant Gallery)
H—O-Ring

LOCTITE is a registered trademark of Loctite Corp.
TEFLON is a registered trademark of Du Pont Co.

[1] (Saran "CD" engines S.N. —540458)

[2] (Saran "CD" engines S.N. 540459—)

RG,10,DT7402 –19–29NOV99–3/3

Clean Cylinder Liner O-Ring Bore

Use D17015BR O-Ring Groove Cleaning Brush to thoroughly clean lower liner O-ring bore.

NOTE: Use brush exactly as directed by the manufacturer.

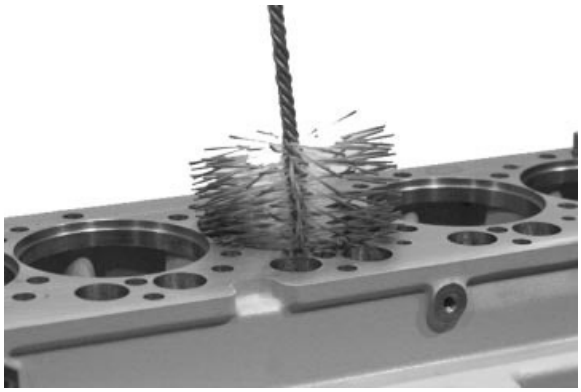

O-Ring Groove Cleaning Brush

RG,10,DT7401 –19–11NOV97–1/1

Measure Cylinder Block Main Bearing Bore

Measure main bearing bore diameter.

Specification	
Cylinder Block Main Bearing Bore—ID	84.455—84.481 mm (3.3250—3.3260 in.)

NOTE: Service bearing caps are not available for these cylinder blocks:

CYLINDER BLOCK	PART NUMBER
Non-Structural 4 Cylinder	R504849
Structural 4 Cylinder	R516309
Non-Structural 6 Cylinder	R504850
Structural 6 Cylinder	R516310

If bearing caps are damaged, or bore is not within specification, replace caps and line bore to specifications. (See MEASURE ASSEMBLED ID OF MAIN BEARING CAPS in Group 040.)

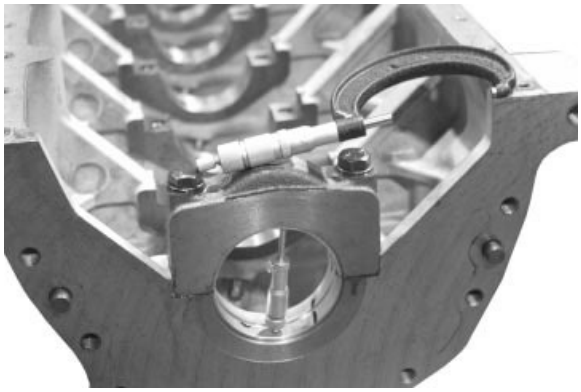

Measuring Cylinder Block Main Bearing Bore

RG,10,DT7427 –19–19DEC03–1/1

Measure Camshaft Follower Machined Bore in Block

Measure camshaft follower bore diameter at all bore locations.

Specification	
Camshaft Follower Bore in Block—ID	31.70—31.75 mm (1.248—1.250 in.)
Camshaft Follower (New)—OD	31.61—31.64 mm (1.245—1.246 in.)
Camshaft Follower-to-Bore—Clearance	0.06—0.13 mm (0.002—0.005 in.)

If any one camshaft follower bore ID and follower-to-bore clearance exceed specified maximum, install a new cylinder block.

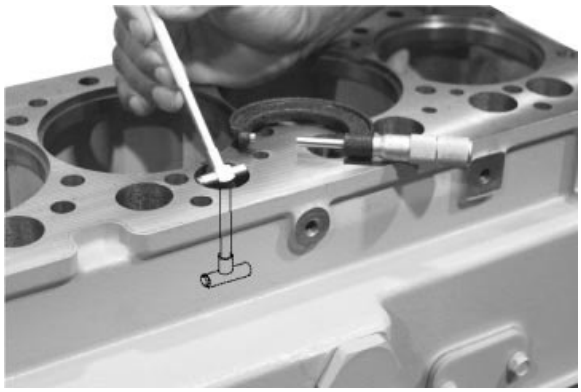

Measuring Camshaft Follower Bore

RG,10,DT7400 –19–11NOV97–1/1

Measure Camshaft Bushing Bores in Block

Replaceable bushings (A) are installed in front camshaft bore only. Remaining bores in cylinder block act as camshaft bushings.

1. Visually inspect and measure front camshaft bushing ID. If bushing is worn or not within specification, install new bushings. (See REMOVE AND INSTALL CAMSHAFT BUSHING in Group 050.)

A—Bushings

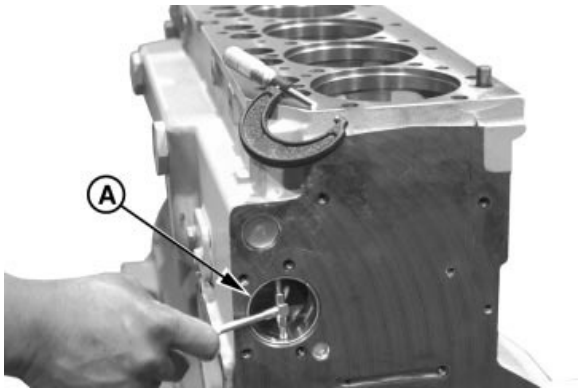

Measuring Camshaft Bushing Bores

Continued on next page

RG,10,DT7399 –19–11NOV97–1/2

2. If necessary to replace bushing, remove bushing and measure bore diameter in block. If bushing bore (B) in block is not within specification, repair or replace cylinder block as required.

3. Measure remaining camshaft bores in block and compare with specification given. Repair or replace cylinder block as required.

Specification

Camshaft Bore in Block, Front No. 1 (Without Bushing)—ID	59.961—59.987 mm (2.3607—2.3617 in.)
Camshaft Bore in Block, Front No. 1 (With Bushing)—ID	55.961—55.987 mm (2.2031—2.2042 in.)
Camshaft Bore in Block (All Except No. 1)—ID	55.986—56.012 mm (2.2042—2.2052 in.)
Camshaft Journal-to-Bushing (No. 1 Bore With Bushing)—Oil Clearance	0.063—0.115 mm (0.0025—0.0045 in.)
Camshaft Journal-to-Bushing (All Except No. 1)—Oil Clearance	0.088—0.140 mm (0.0035—0.0055 in.)

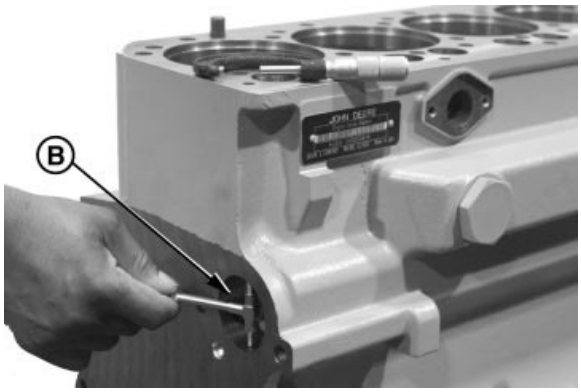

Measuring Camshaft Bushing Bores

B—Bushing Bore

RG,10,DT7399 –19–11NOV97–2/2

Measure Balancer Shaft Bushing ID in Block (4-Cylinder Engines)

1. Visually inspect and measure balancer shaft bushing ID with bushing removed (A) and with bushing installed (B).

   If bushing is worn or not within specification, install new bushings. (See REMOVE AND INSTALL BALANCER SHAFT BUSHINGS in Group 050.)

2. If necessary to replace bushing, remove bushing and measure bore diameter in block.

   If bore diameter in block is not within specification, install a new cylinder block.

Specification

Balancer Shaft Bore in Block (Bushing Removed)—ID	43.262—43.288 mm (1.7032—1.7042 in.)
Balancer Shaft Bushing—ID	40.177—40.237 mm (1.5818—1.5841 in.)
Balancer Shaft Journal-to-Bushing—Clearance	0.016—0.102 mm (0.0006—0.0040 in.)

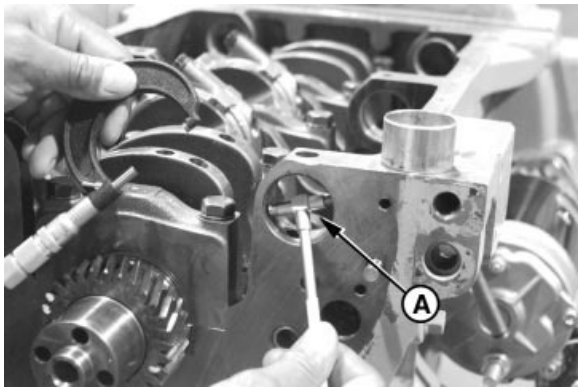

Balancer Shaft Bore ID (Bushing Removed)



Balancer Shaft Bore ID (Bushing Installed)

A—Bore without Bushing
B—Bore with Bushing

RG,10,DT7398 –19–18MAY00–1/1

Measure Cylinder Liners and Block Bores

Measure cylinder liners and block bores. Replace liners not within specifications.

	Specification
Lower Block Bore for Seating Liner—ID	115.75—115.80 mm (4.557—4.559 in.)
Upper Block Bore for Seating Liner—ID	120.70—120.75 mm (4.752—4.754 in.)
Liner Flange in Block—ID	126.33—126.35 mm (4.973—4.974 in.)
Liner at Upper Bore—OD	120.61—120.69 mm (4.7484—4.7516 in.)
Liner-to-Cylinder Block—Clearance at Lower Bore	0.035—0.100 mm (0.001—0.004 in.)
Liner-to-Cylinder Block—Clearance at Upper Bore	0.10—0.14 mm (0.004—0.005 in.)
Cylinder Liner—ID	106.48—106.52 mm (4.192—4.194 in.)
Cylinder—Maximum Wear	0.10 mm (0.004 in.)
Cylinder—Maximum Taper	0.05 mm (0.002 in.)
Cylinder—Maximum Out-of-Round	0.05 mm (0.002 in.)

DPSG,OUO1004,213 –19–09JUL98–1/1

Measure Liner Flange Counterbore Depth in Block

Measure liner flange counterbore depth in block and compare to specification given below. If depth is not within specification, liner shims are available.

Specification

Cylinder Liner Flange
Counterbore—Depth in Block..... 5.952—5.988 mm
(0.2343—0.2357 in.)



RG7490 –UN–23NOV97

Measure Liner Flange Counterbore Depth

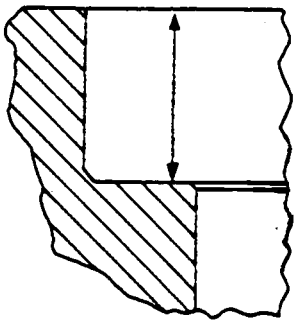

RG4726 –UN–13DEC88

Liner Flange Counterbore Depth

RG,10,DT7397 –19–11NOV97–1/1

Measure Liner Flange Thickness

Measure cylinder liner flange thickness at several locations. If liner flange is not within specifications, liner shims are available or replace piston and liner set.

Specification

Cylinder Liner Flange—Thickness ..... 6.022—6.058 mm
(0.2371—0.2385 in.)



RG7494 –UN–23NOV97

Measuring Liner Flange Thickness

RG,10,DT7396 –19–11NOV97–1/1

Measure Cylinder Block Top Deck Flatness

IMPORTANT: When cylinder block top deck or main bearing bores are machined, the dimension from crankshaft centerline to top deck will be changed. Make sure this dimension is within specifications, otherwise piston may contact cylinder head.

Measure cylinder block top deck flatness using D05012ST Precision Straightedge and feeler gauge. If flatness is not as specified, clean up top deck of cylinder block.

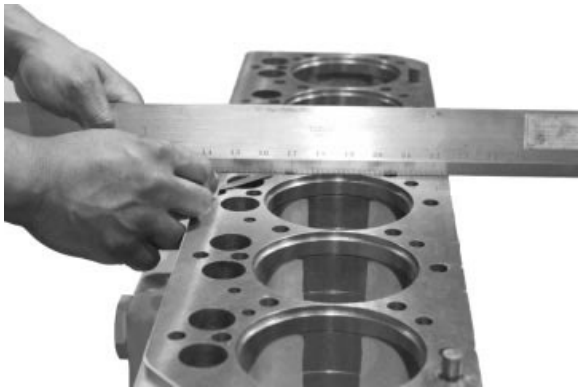

RG7492 –UN–23NOV97

Measuring Cylinder Block Top Deck Flatness

Cylinder Block Top Deck—Specification

Maximum Acceptable Out-of-Flat, Entire Length or Width (Used)—Measurement	0.08 mm (0.003 in.)
Maximum Acceptable Out-of-Flat (Any 150 mm [5.90 in.] Length)—Measurement	0.025 mm (0.001 in.)
Top Deck (Surface Grind Only) (AA)—Surface Finish	0.8—3.2 micrometers (32—125 micro-in.)
Top Deck Surface Finish—Maximum Wave Depth	0.012 mm (0.0005 in.)
Main Bearing Bore Centerline-to-Cylinder Block Top Deck—Distance	337.896—337.972 mm (13.3029—13.3059 in.)

RG,10,DT7395 –19–11NOV97–1/1

Remove, Inspect, and Install Piston Cooling Orifices

IMPORTANT: A piston cooling orifice failure could cause damage to pistons, piston pins, rod pin bushings and liners. If a piston cooling orifice is left out, low or no oil pressure will result.

1. Remove and clean each piston cooling orifice (A) to make sure it is not plugged or damaged. Replace if questionable.

*NOTE: 300 Series Engines and some **POWERTECH**® Engines use similar hex head style orifices (D). **POWERTECH**® Engines use a larger diameter orifice jet (B) than 300-Series Engines, for lubrication and cooling of piston skirts. On **POWERTECH**® engines equipped with hex head orifice (D), add a punch mark (C) to each orifice as shown. Adding a punch mark to orifice (D) will prevent orifice from being mistakenly used on 300-Series Engines. This is not necessary on round head orifice (E) because of its different shape.*

2. Install and tighten orifices.

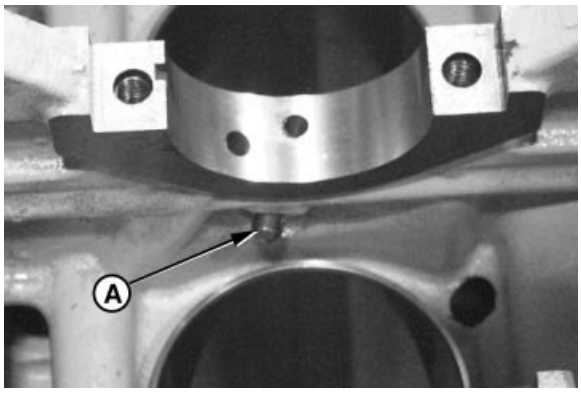

RG7543A –UN–05NOV97

Piston Cooling Orifice

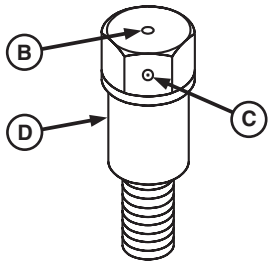

RG11776 –UN–05SEP01

Hex Head Orifice

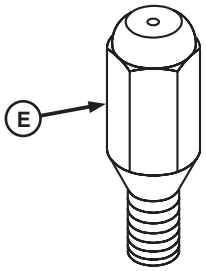

RG11777 –UN–05SEP01

Round Head Orifice

Specification

Piston Cooling Orifice Jet—Diameter	1.4 mm (0.055 in.)
Piston Cooling Orifice—Torque	11 ± 1.5 N•m (96 ± 13 lb-in.)

A—Piston Cooling Orifice
B—Orifice Jet
C—Punch Mark
D—Hex Head Orifice
E—Round Head Orifice

POWERTECH *is a registered trademark of Deere & Company*

RG,10,DT7394 –19–04JUN02–1/1

Measure Fuel Supply Pump Push Rod Bore and Push Rod OD

1. Visually inspect and measure fuel supply pump push rod OD.
2. If rod is worn or not within specification, install a new rod.

Specification

Push Rod—OD	9.891—9.917 mm (0.3894—0.3904 in.)
Push Rod Bore in Block—ID	10.00—10.05 mm (0.3937—0.3957 in.)



RG7495 –UN–23NOV97

Fuel Supply Pump Push Rod Bore

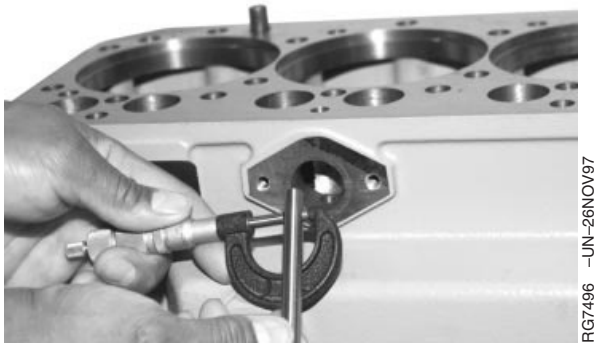

RG7496 –UN–26NOV97

Fuel Supply Pump Push Rod OD

RG,10,DT7393 –19–11NOV97–1/1

Measure and Adjust Cylinder Liner Standout (Height Above Block)

02
030
44

NOTE: If a new liner assembly is being installed in a new or used cylinder block, liner height must be checked.

1. Be sure liner bore in cylinder block and top deck of block are clean.

IMPORTANT: Liner should rotate smoothly by hand when installed without O-rings or packing. If not, remove liner and clean block.

2. Install liner without O-rings and packing. If liner does not rotate smoothly by hand, remove liner and polish lower pilot bore in block with emery cloth or D17015BR O-Ring Groove Cleaning Brush. Use a shop towel or other suitable means to collect debris when polishing bore.

   Locate liner mark toward the front of the engine. Secure with cap screws and washers (approximately 3 mm [1/8 in.] thick). Tighten screws to 68 N•m (50 lb-ft).

3. Using JDG451 or KJD10123 Height Gauge and D17526CI or D17527CI Dial Indicator, measure height (A) of liner at 1, 5, 7, and 11 o'clock positions as viewed from flywheel end of engine.

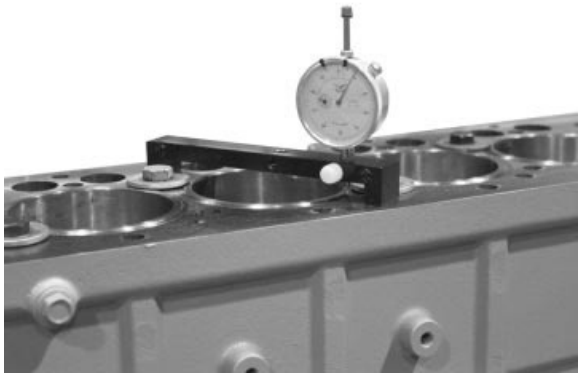

RG7445 –UN–23NOV97

Cylinder Liner Standout

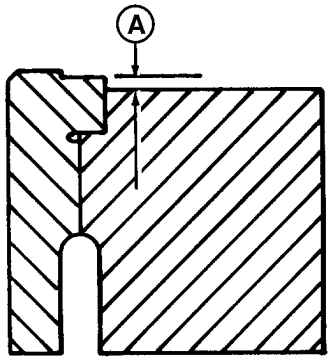

RG6439 –UN–03NOV97

Cylinder Liner Standout

A—Liner Height

Specification

Cylinder Liner—Height above Block	0.030—0.100 mm (0.001—0.004 in.)
Maximum Permissible Height Difference at Nearest Point of Two Adjacent Liners, or Within a Single Liner	0.05 mm (0.002 in.)

Continued on next page

4. If liner height is above specification, check cylinder block for burrs on liner support flange or incorrect counterbore depth. If burrs are present, apply lapping compound to liner flange shoulder in the block, then install liner and turn to left and right using KCD10001 or JDG1145 Cylinder Liner Puller to rub off enough material to seat liner as necessary.

IMPORTANT: ONE LINER SHIM ONLY may be installed under each liner flange. If liner requires more than one shim, install a new liner or cylinder block.

5. If liner height is no more than 0.08 mm (0.003 in.) below top deck of block, install one liner shim under liner flange.

NOTE: Two shim sizes are available; 0.05 mm (0.002 in.) CD15466 liner shim and 0.10 mm (0.004 in.) R65833 liner shim.

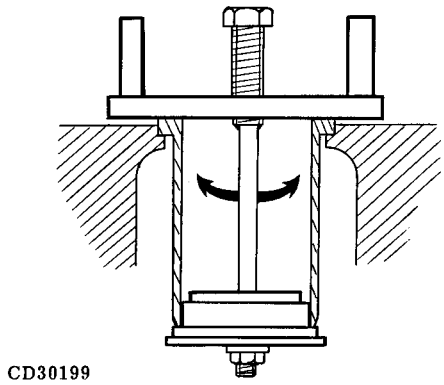

KCD10001 Shown

CD30199 –UN–07MAR95

02
030
45

OUO1020,0001397 –19–24NOV03–2/2

Install Packing on Cylinder Liner and O-Rings in Block

IMPORTANT: DO NOT use oil or hand cleaner soap on cylinder liner packing or O-rings. Petroleum products will cause the red (or white) O-ring to swell, which may result in O-ring damage during liner installation.

1. Pour AR54749 Soap Lubricant into a suitable container.
2. Dip O-rings in AR54749 Soap Lubricant.
3. Install the black O-ring (A) in the lower O-ring groove in the cylinder block (C).
4. Install the red (or white) O-ring (B) in the upper O-ring groove in the cylinder block.

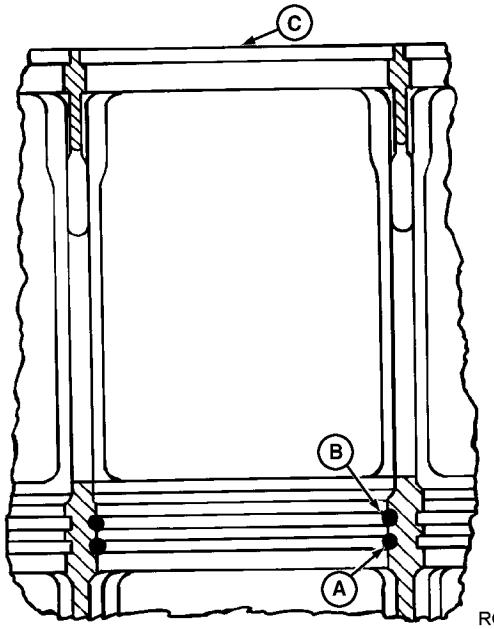

RG3826 –UN–04DEC97

Cylinder Liner Packing and Block O-Rings

A—Black O-Ring
B—Red or White O-Ring
C—Cylinder Block

Continued on next page

RG,10,DT7391 –19–11NOV97–1/2

5. Turn cylinder liner (B) upside-down. Dip square packing (A) in soap lubricant and install over outside of liner.
6. Slide packing down firmly against shoulder on liner. Make sure packing is not twisted.
7. Coat the liner packing sealing area of the cylinder liner and block O-rings with soap lubricant.

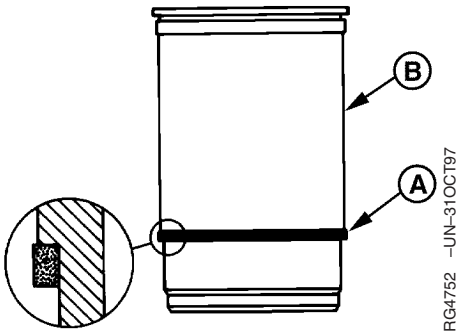

Cylinder Liner Packings and O-Rings

A—Square Packing
B—Cylinder Liner

RG,10,DT7391 –19–11NOV97–2/2

Install Cylinder Liner in Block

IMPORTANT: There are different manufacturers/part numbers for piston and liner sets. These sets are not interchangeable. DO NOT intermix piston/liner sets on the same engine. Check parts catalog for correct applications.

IMPORTANT: Install cylinder liners into same cylinder block bore as removed. DO NOT scuff the liner packing across the upper counterbore.

Pitted or eroded liners that meet reuse guidelines should be rotated 90° from their removed position. (See VISUALLY INSPECT CYLINDER LINERS earlier in this group for reuse guidelines.)

Early liners were machined with an 0.8 mm step radius which could cause damage to seals during liner installation. On these liners, blunt the sharp edge (B) of step to a 45° chamfer with a honing stone or emery cloth. Newer liners have a 3.0 mm step radius (C) allowing for installation of liners without damage to seals.

1. Install liner in block bore with mark (made during disassembly) toward front of engine, unless liner OD is pitted or eroded.

   If liner OD is pitted or eroded, but still within acceptable service limits, rotate liner 90° from its removed position. Pitted sections of the liner should be facing the front or rear of engine.

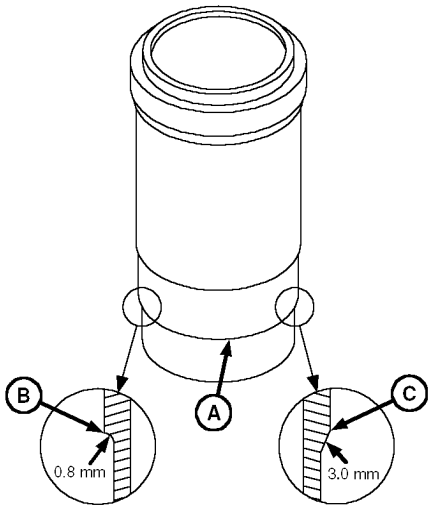

RG10370 –UN–30SEP99

Liner Step

A—Liner Step
B—0.8 mm Step Radius
C—3.0 mm Step Radius

Continued on next page

NOTE: Using KCD10001 (A) or JDG1145 Cylinder Liner Puller is the preferred method for seating cylinder liners.

02
030
48

2. A resistance will be felt when cylinder liner is aligned in pilot bore. Finish seating liners using KCD10001 (A) or JDG1145 Cylinder Liner Puller.

   A clean, hardwood block and mallet may be used if puller is not available. Gently tap hardwood block over top of cylinder liner with mallet.

NOTE: Cylinder liner will protrude over top of cylinder block more than normal due to uncompressed packings and O-rings.

IMPORTANT: If you suspect a packing may have sheared or been displaced during liner installation, remove and examine the liner and packing assembly. If no damage is found, check packings for proper position. Resoap packings and reinstall liner assembly.

3. Hold liners in place with large flat washers and cap screws. Turn cap screws snug but do not tighten.

4. Clean cylinder liner bores with waterless hand cleaner after installation. Wipe dry with clean towels.

5. Apply clean engine oil to liner bores immediately to prevent corrosion.

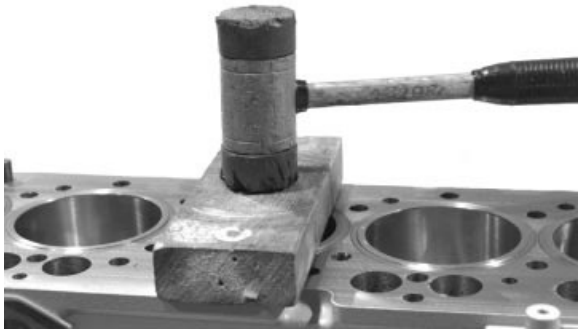

RG7497 –UN–23NOV97

Install Cylinder Liner in Block

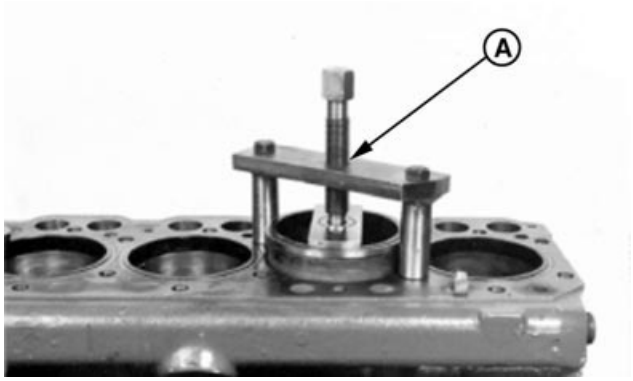

RGCD6373 –UN–31OCT97

Install Cylinder Liner in Block (Preferred Method)

A—KCD10001 Cylinder Liner Puller

RG,10,DT7390 –19–06JAN00–2/2

Assemble Piston and Connecting Rod

IMPORTANT: There are different manufacturers/part numbers for piston and liner sets. These sets are not interchangeable. DO NOT intermix piston/liner sets on the same engine. Check parts catalog for correct applications.

IMPORTANT: If a new piston and liner assembly is to be installed, DO NOT remove piston from liner. Push piston out of liner bottom only far enough to install piston pin.

1. Lubricate piston pin and bushing with clean engine oil.

IMPORTANT: Pistons must be installed on connecting rods from which they were removed, and new piston pin snap rings must be used. Piston and connecting rod must be assembled so combustion bowl in piston is offset toward fuel injection pump side of engine when long side of connecting rod is toward the camshaft side of engine.

NOTE: Some pistons are marked with an arrow on top of piston. Arrow must point to side marked "FRONT" on connecting rod when assembled.

2. Assemble pistons and connecting rods, making sure the word "FRONT" (A) on side of piston and side of connecting rod are facing same direction.

3. Insert piston pin (B) into piston pin bore.

NOTE: Some piston pin snap rings have sharp edges on both sides. These rings are reversible.

4. Install NEW piston pin snap rings with ring gap (C) facing down to the 6 o'clock position at bottom of piston (viewed from rod end) and sharp edge of ring facing away from piston pin. Make sure snap rings are seated in grooves of piston pin bore.

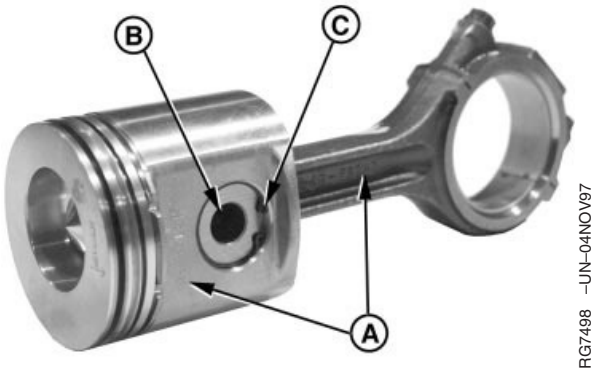

RG7498 –UN–04NOV97

Assembly Piston and Connecting Rod

A—Stamped "Front"
B—Piston Pin
C—Snap Ring Gap

RG,10,DT7389 –19–06JAN00–1/1

Install Piston Rings

IMPORTANT: Piston rings can be damaged if expanded too far. Expand piston rings only as far as necessary to install rings on piston.

1. When installing new piston rings, use JDE85, JDE135, or KJD10140 Piston Ring Expander. Install oil ring expander in bottom ring groove. Position end gap toward either side of piston pin.

2. Install oil control ring (C) in bottom ring groove over ring expander. Install with end gap on opposite side of piston from ring expander gap.

NOTE: Identify ring top as follows:

If ring has no marks, it can be installed with either side facing top.

If rings are marked with depression ("pip"), mark should be on top as shown (A). Ring with two depression marks goes in the second groove.

If ring is marked with paint strip, hold ring with gap facing you and turn ring so that paint strip is to the left side of gap.

3. Identify top side of compression rings. Top side of rectangular and keystone compression rings will be identified by marks on the top side of two rings.

4. Install rectangular compression ring (B) in center ring groove with top of ring toward top of piston.

5. Position gap in rectangular compression ring on opposite side of piston from oil control ring (C) gap.

6. Install keystone compression ring (D) in top ring groove with top of ring toward top of piston.

7. Position gap in keystone compression ring on opposite side of piston from rectangular compression ring gap.



RG7499 –UN–04NOV97

Piston Ring Expander Tool

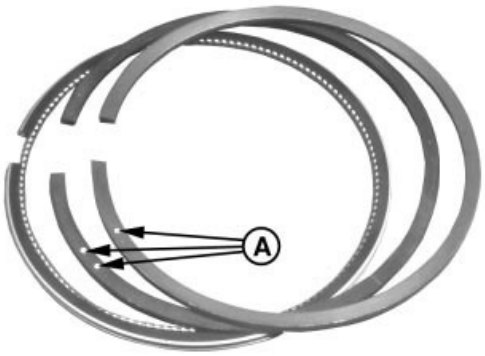

RG7797 –UN–11NOV97

Compression Rings

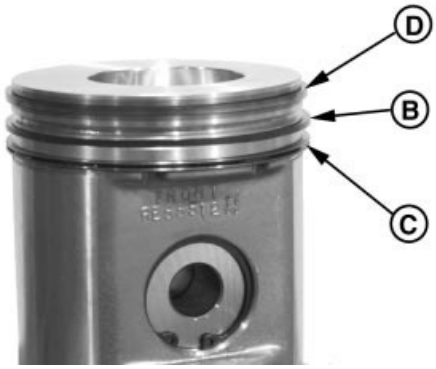

RG7500 –UN–04NOV97

Piston Ring Locations

A—Depression Marks
B—Rectangular Compression Ring
C—Oil Control Ring
D—Keystone Compression Ring

Continued on next page

RG,10,DT7388 –19–11NOV97–1/2

8. Stagger ring gaps on pistons as shown.

9. Coat pistons, liners and inside of JDE84 Piston Ring Compressor with clean engine oil.

A—Piston Head
B—Top Compression Ring
C—Oil Control Ring Gap
D—Expander Ring Gap
E—Bottom Compression Ring Gap
F—Front of Engine

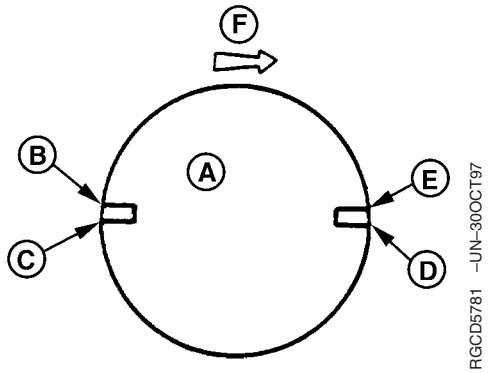

RGCD5781 –UN–30OCT97

Piston Ring Gap Stagger Pattern

RG,10,DT7388 –19–11NOV97–2/2

Install Piston and Connecting Rod Assembly

IMPORTANT: There are different manufacturers/part numbers for piston and liner sets. These sets are not interchangeable. DO NOT intermix piston/liner sets on the same engine. Check parts catalog for correct applications.

Earlier engines have the traditional tongue-and-groove between the connecting rod and cap (A). Later engines have the PRECISION JOINT™ rod and cap (B). Installation of each rod is similar, with differences noted in the following procedure.

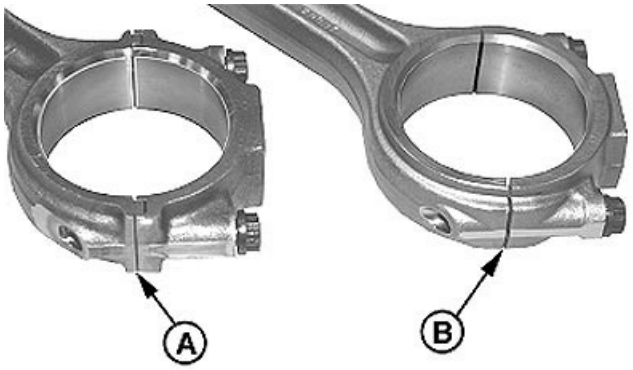

RG9447 –UN–27JUL98

Connecting Rods

A—Tongue-and-Groove Rod and Cap
B—PRECISION JOINT™ Rod and Cap

PRECISION JOINT is a trademark of Deere & Company

Continued on next page

RG,10,DT7387 –19–06JAN00–1/5

IMPORTANT: Be careful so crankshaft journals and liner walls are not damaged by connecting rod when installing piston and rod in liner.

1. Coat pistons, liners and inside of piston ring compressor with clean engine oil.

2. Carefully place JDE84 Piston Ring Compressor with piston and rod over liner so the word “FRONT” on side of rod and on the side of piston faces toward the front of the engine.

NOTE: Be sure the word “FRONT” on connecting rod faces toward the front of the engine.

If arrow indicating “FRONT” is not visible on top of pistons, install piston and rod so combustion bowl in piston is offset toward fuel injection pump side of engine, and the long side of the connecting rod is toward camshaft side of engine.

3. With piston centered in ring compressor and rings staggered correctly, push piston down until top ring is into liner.

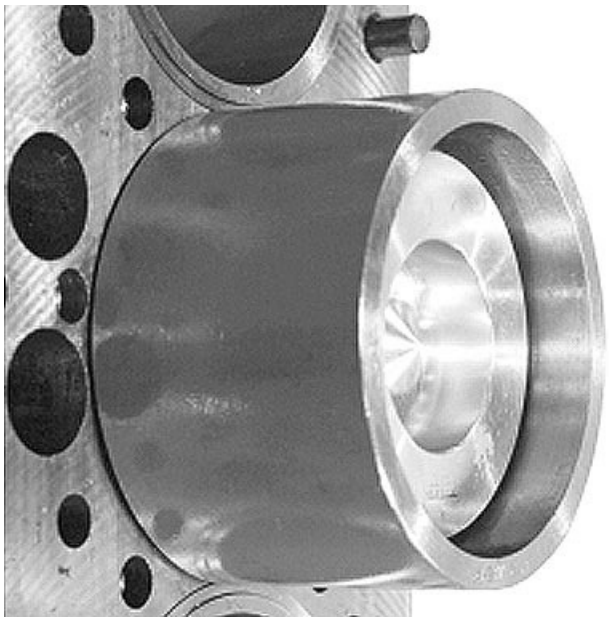

RG9445 –UN–07JUL98

Install Piston—Tapered Ring Compressor

RG,10,DT7387 –19–06JAN00–2/5

4. Install bearing insert in connecting rod with tang (A) in groove (B).

5. Apply clean engine oil on insert and crankshaft journal. Carefully pull connecting rod and insert against crankshaft journal.

A—Tang
B—Groove

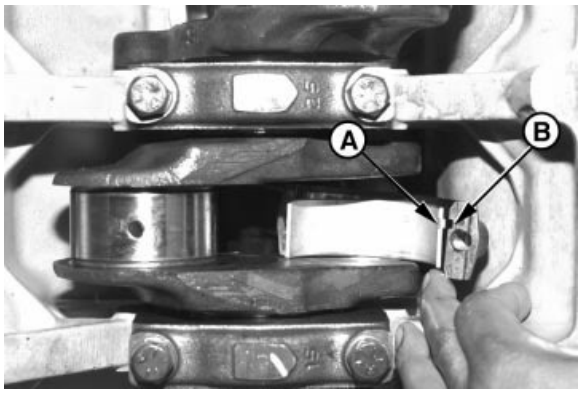

RG7503 –UN–04NOV97

Tongue-and-Groove Rod Shown

Continued on next page

RG,10,DT7387 –19–06JAN00–3/5

NOTE: Due to the manufacturing process, the PRECISION JOINT™ rod and cap both have two grooves, while the bearing insert has a single tang. Only the one groove in the rod and cap is used for the bearing tang.

6. Install bearing insert in connecting rod cap with tang (A) in groove (B).

IMPORTANT: On PRECISION JOINT™ connecting rods, make sure cap is properly aligned on rod with edges flush and interlocking surfaces sealed tightly.

7. Apply clean engine oil to bearing insert. Install cap on connecting rod with tangs to same side.

A—Tang
B—Groove
C—Extra Groove (Not Used)

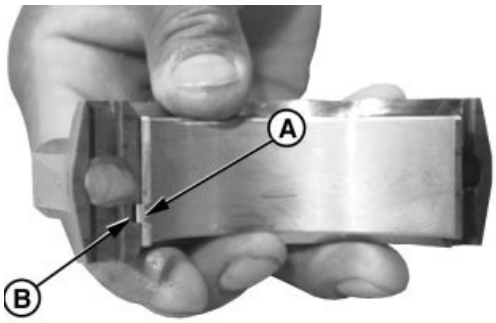

RG7504 –UN–04NOV97

Tongue-and-Groove Rod

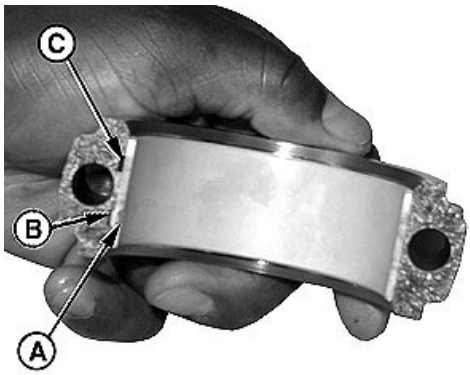

RG9448 –UN–27JUL98

PRECISION JOINT™ Rod

PRECISION JOINT is a trademark of Deere & Company

Continued on next page

RG,10,DT7387 –19–06JAN00–4/5

IMPORTANT: NEVER use connecting rod cap screws more than once for final engine assembly. Once rod cap screws have been tightened to final torque-turn specification, they must not be reused for another final assembly.

Cap screws for PRECISION JOINT™ rod and cap are 3 mm shorter than tongue-and-groove cap screws. DO NOT mix hardware.

Two types of connecting rods and caps may be used within the same engine, however the correct cap screws must be used for each type of connecting rod.



RG7505 –UN–23NOV97

Connecting Rod Cap Screws

8. Dip NEW connecting rod cap screws in clean oil and install.

9. Tighten cap screws alternately to initial torque specification.

Specification	
Connecting Rod Cap Screws— Initial Torque	58 N•m (43 lb-ft)

10. Then, torque-turn all cap screws to 90—100 degrees. (See TORQUE-TURN CONNECTING ROD CAP SCREWS next in this group.)

PRECISION JOINT is a trademark of Deere & Company

RG,10,DT7387 –19–06JAN00–5/5

Torque-Turn Connecting Rod Cap Screws

IMPORTANT: Always use new connecting rod cap screws.

Using Engine Axis Method to Torque-Turn Connecting Rod Cap Screws

1. After tightening cap screws to initial torque values, mark connecting rod cap and socket.
2. Position handle of wrench parallel to centerline of engine crankshaft axis (A).
3. Tighten 1/4 turn (90—100°) clockwise until handle of wrench is perpendicular to centerline of engine crankshaft axis (B) as shown.

Specification

Connecting Rod Cap Screws—
Torque-Turn..... 1/4 Turn (90—100°)
After Initial Torque

A—Parallel to Centerline Crankshaft
B—Perpendicular to Centerline Crankshaft

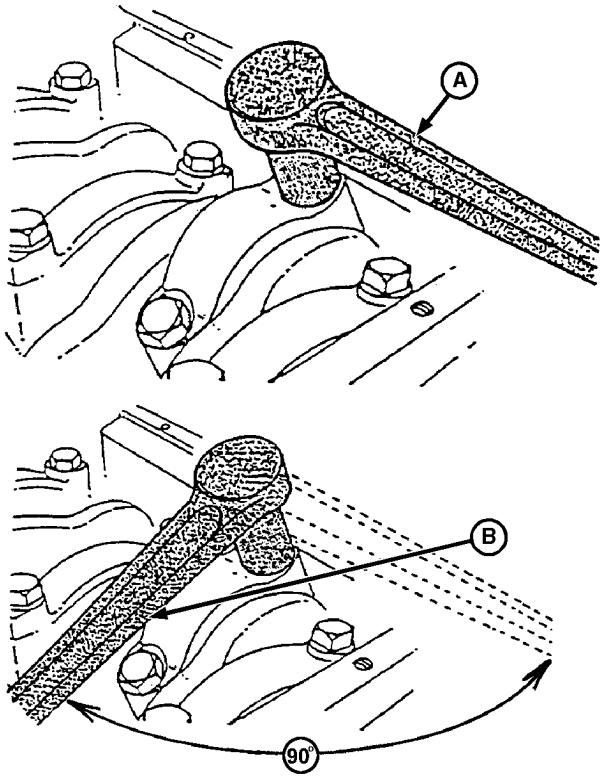

RG9102 –UN–27MAR98

Torque-Turn Rod Caps

RG,10,DT7386 –19–11NOV97–1/2

Using JT05993 Torque Angle Gauge to Torque-Turn Connecting Rod Cap Screws

After tightening cap screws to initial torque values provided earlier, follow directions provided with JT05993 Gauge and torque-turn each cap screw 90°—100°.

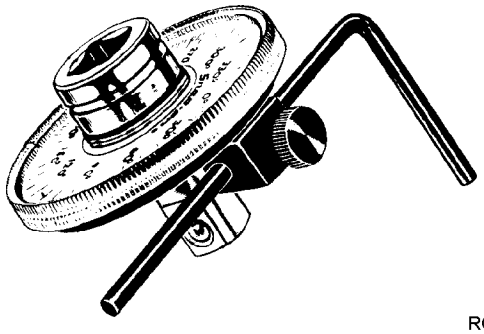

RG5698 –UN–05DEC97

Torque Angle Gauge

RG,10,DT7386 –19–11NOV97–2/2

Check Engine Rotation for Excessive Tightness

1. Rotate crankshaft several revolutions to be sure engine rotates without excessive tightness.
2. Check liners for deep scratches caused by an improperly installed or broken piston ring.
3. Check side clearance of rods. Must have slight side-to-side movement.

RG,10,DT7385 –19–11NOV97–1/1

Measure Piston Protrusion

1. Press down on top of piston to remove oil clearances before measuring piston protrusion.

NOTE: If JDG451 or KJD10123 are not available, a dial indicator with magnetic base can be used to measure piston protrusion.

2. Use JDG451 or KJD10123 Height Gauge (or use a magnetic base dial indicator) to measure piston protrusion. Place gauge on top of cylinder block so dial indicator can be set to “zero” with top of block.

3. Position gauge across piston as close to centerline of piston pin as possible. While pressing gauge downward, rotate crankshaft until piston is at TDC position. Measure piston height at several positions around the outermost diameter of piston. Piston height must be checked at outermost diameter of piston.

4. Piston protrusion must be within specifications to prevent piston-to-exhaust valve contact.

5. Measure piston protrusion and compare to the following specifications. If protrusion does not meet specifications, check dimensions of piston, connecting rod, cylinder block, crankshaft, and bearings to determine the cause.

Piston Protrusion Using JDG451 or Magnetic Base Dial Indicator—Specification

4-Cyl. Standard Duty
Codes 4801, 4803, 4823, 4828, 4833.
Part Numbers RE515372, RE59279, RE505101, RE59277, RE505100.
—Protrusion ..... 0.07—0.25 mm (0.003—0.010 in.)

6-Cyl. Standard Duty
Codes 4805, 4807.
Part Numbers RE515372, RE59279, RE505101, RE59277, RE505100.
—Protrusion ..... 0.07—0.25 mm (0.003—0.010 in.)

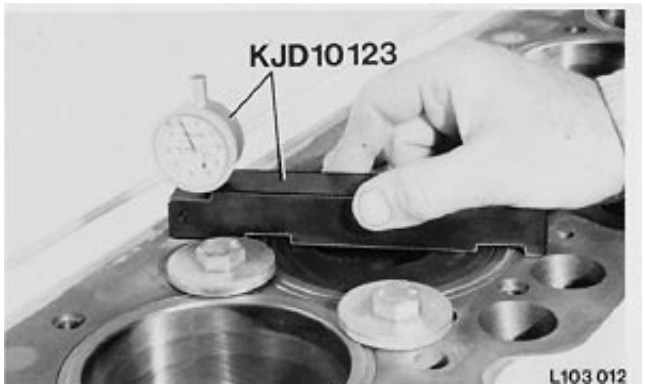

L103012 –UN–15NOV88

Piston Protrusion above Block Deck


RG7506 –UN–23NOV97

Measuring with JDG451

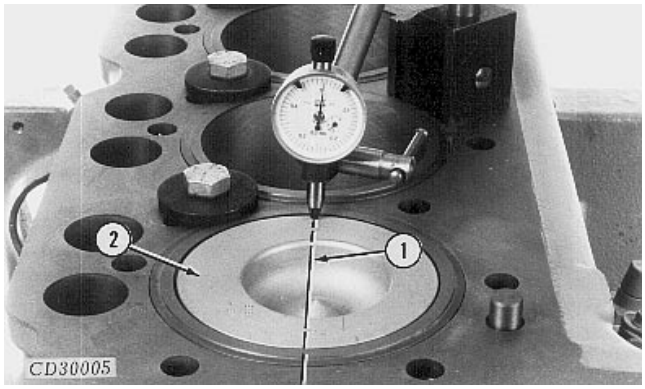

CD30005 –UN–07FEB95

Magnetic Base Dial Indicator

1—Centerline of Piston Pin
2—Position at TDC

Continued on next page

RG,10,DT7384 –19–02DEC03–1/3

4-Cyl. Heavy Duty
Codes 4804, 4809, 4816, 4822,
4825.
Part Numbers RE509540,
RE507758, RE55512, RE505102.
—Protrusion..... 0.07—0.25 mm
(0.003—0.010 in.)
6-Cyl. Heavy Duty
Codes 4808, 4810, 4815, 4820,
4824.
Part Numbers RE509540,
RE507758, RE55512, RE505102.
—Protrusion..... 0.07—0.25 mm
(0.003—0.010 in.)
All Four-Valve Head Engines.
Part Numbers RE509540,
RE507758, RE505102.
—Protrusion..... 0.07—0.25 mm
(0.003—0.010 in.)

Piston Protrusion Using KJD10123—Specification

4-Cyl. Standard Duty
Codes 4801, 4803, 4816, 4822,
4825.
Part Numbers RE515372,
RE59279, RE505101, RE59277,
RE505100.
(Maximum)—Protrusion..... 0.21 mm
(0.008 in.)
6-Cyl. Standard Duty
Codes 4805, 4807.
Part Numbers RE515372,
RE59279, RE505101, RE59277,
RE505100.
(Maximum)—Protrusion..... 0.21 mm
(0.008 in.)
4-Cyl. Heavy Duty
Code 4804, 4809, 4816, 4822,
4825.
Part Numbers RE509540,
RE507758, RE55512, RE505102.
(Maximum)—Protrusion..... 0.15 mm
(0.006 in.)

Continued on next page

6-Cyl. Heavy Duty
Codes 4808, 4810, 4815, 4820,
4824.
Part Numbers RE509540,
RE507758, RE55512, RE505102.
(Maximum)—Protrusion ..... 0.15 mm
(0.006 in.)

All Four-Valve Head Engines.
Part Numbers RE509540,
RE507758, RE505102.
(Maximum)—Protrusion ..... 0.15 mm
(0.006 in.)

RG,10,DT7384 –19–02DEC03–3/3

Complete Final Assembly

1. Install oil pump outlet tube O-ring in cylinder block. Install oil pump and outlet tube. (See INSTALL ENGINE OIL PUMP in Group 060.)
2. Install balancer shaft bushings (4-cylinder engines). (See REMOVE AND INSTALL BALANCER SHAFT BUSHINGS in Group 050.)
3. Install camshaft bushings. (See REMOVE AND INSTALL CAMSHAFT BUSHINGS in Group 050.)
4. Install oil bypass valve (in front of block) and front plate. (See INSTALL CYLINDER BLOCK FRONT PLATE in Group 050.)
5. Install balancer shafts (if equipped). (See INSTALL AND TIME BALANCER SHAFTS in Group 050.)
6. Install camshaft and timing gears. (See INSTALL CAMSHAFT in Group 050.)
7. If equipped with cartridge type oil pressure regulating valve, install valve. (See REMOVE AND INSTALL OIL PRESSURE REGULATING VALVE in Group 060.)
8. Install timing gear cover. (See INSTALL TIMING GEAR COVER in Group 050.)
9. If equipped with spring, plunger and seat type oil pressure regulating valve, install valve assembly. (See REMOVE AND INSTALL OIL PRESSURE REGULATING VALVE in Group 060.)
10. Install oil pan. (See INSTALL OIL PAN in Group 060.)
11. Install crankshaft pulley. (See INSTALL PULLEY OR VIBRATION DAMPER PULLEY in Group 040.)
12. Install camshaft followers. (See INSPECT, MEASURE AND ASSEMBLE CAMSHAFT FOLLOWERS in Group 050.)
13. Install cylinder head with new gasket. (See INSTALL CYLINDER HEAD in Group 020 for two valve head or INSTALL CYLINDER HEAD in Group 021 for four valve head.)
14. Fill engine with clean oil and proper coolant.
15. Perform engine break-in. (See PERFORM ENGINE BREAK-IN in Group 010.)

RG,10,DT7383 –19–05JUN02–1/1

Crankshaft and Main Bearing Failure Analysis

Scored Main Bearing (Diagnosis Also Applies to Connecting Rod Bearing.):

- Oil starvation.
- Contaminated oil.
- Engine parts failure.
- Excessive heat.
- Poor periodic service.

Galled or "Wiped" Bearings:

- Fuel in lubricating oil (incomplete combustion).
- Coolant in lubrication system (cracked block, liner seal failure, or leaking water pump seal with plugged hole).
- Insufficient bearing oil clearance.
- Parts not lubricated prior to engine operation.
- Wrong bearing size.

Inconsistent Wear Pattern:

- Misaligned or bent connecting rod.
- Warped or bowed crankshaft.
- Distorted cylinder block.

Broken Main Bearing Caps:

- Improper installation.
- Dirt between bearing and crankshaft journal.
- Low oil pressure.
- Oil pump failure.

Cracked, Chipped or Broken Bearings:

- Overspeeding.
- Excessive idling.
- Lugging.
- Excessive oil clearance.
- Improper installation.

RG,15,DT7461 –19–18MAY00–1/1

Inspect Vibration Damper (6.8 L Engines)

IMPORTANT: Do not immerse the vibration damper in cleaning solvent or any petroleum product. Rubber portion of damper may be damaged. Use a steam cleaner, soap solution or water only.

Never apply thrust on outer ring. Damper is sensitive to impact damage, such as being dropped or struck with a hammer.

The damper assembly is not repairable. Replace damper every 5 years or 4500 hours, whichever occurs first. Also, replace damper whenever crankshaft is replaced or after major engine overhaul.

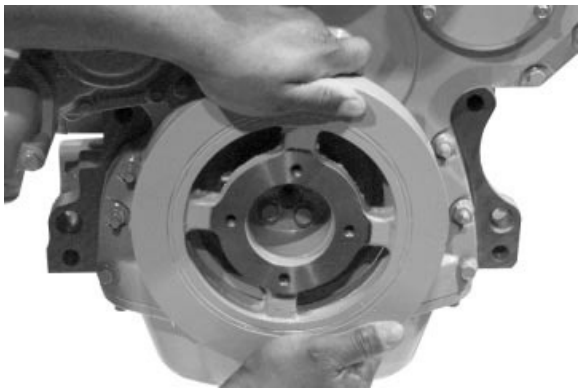
RG7507 –UN–23NOV97

Vibration Damper—6-Cylinder Engine

1. Grasp outer ring of damper and attempt to turn it in both directions. If rotation is felt, damper is defective and should be replaced. Also, if rubber is separated, partially missing, or displaced, replace damper.

RG,15,DT7460 –19–15OCT01–1/3

2. Check vibration damper radial runout (concentricity) by positioning D17526CI (English, in.) or D17527CI (Metric, mm) dial indicator so probe contacts damper OD.

3. With engine at operating temperature, rotate crankshaft using JDE81-1 or JDE83 Flywheel Turning Tool.

4. Note dial indicator reading. If runout (concentricity) exceeds specifications given below, replace vibration damper.

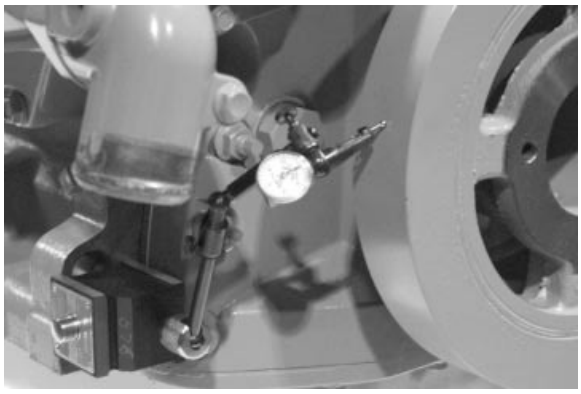
RG7508 –UN–23NOV97

Vibration Damper Radial (Concentricity)

Specification	
Damper—Maximum Radial Runout (Concentricity)	1.50 mm (0.060 in.)

Continued on next page

RG,15,DT7460 –19–15OCT01–2/3

5. Check vibration damper wobble using a dial indicator. Measure wobble at the outer edges of damper face (A).

6. Rotate crankshaft one complete revolution using engine rotation tool, and note total dial indicator movement. Compare readings with specifications below.

Specification	
Damper Pulley Outer Ring—	
Wobble (Maximum)	1.50 mm (0.060 in.)
Damper Pulley Inner Ring—	
Wobble (Maximum)	0.5 mm (0.020 in.)

IMPORTANT: Replace damper after 4500 hours or every five years, whichever occurs first.

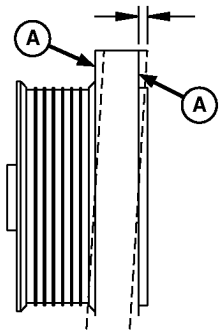

RG9053 –UN–16MAR98

Damper Wobble

A—Vibration Damper Wobble

RG,15,DT7460 –19–15OCT01–3/3

Remove Pulley or Vibration Damper and Pulley

Straight Nose Crankshaft

IMPORTANT: Never apply thrust on outer ring of damper. Do not drop or hammer on damper.

1. Remove four cap screws (A) from vibration damper.

NOTE: Check positioning of damper or pulley center washer before removal to aid in installation.

2. If equipped, remove center cap screw and washer (B).

3. Grasp damper and remove from crankshaft.

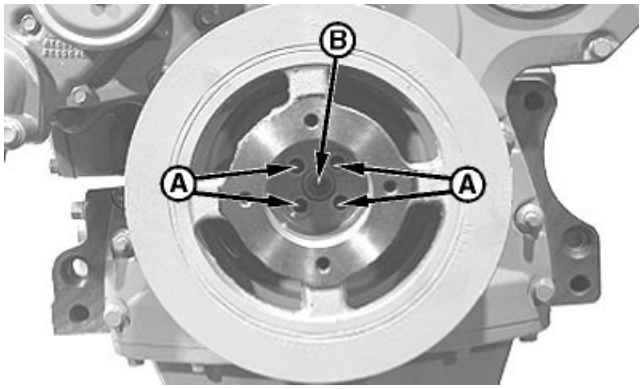

RG9078 –UN–16MAR98

Damper and Pulley

A—Cap Screws
B—Center Cap Screw

Continued on next page

RG,15,DT7459 –19–24MAY02–1/3

4. Remove belt pulley (C).

C—Pulley

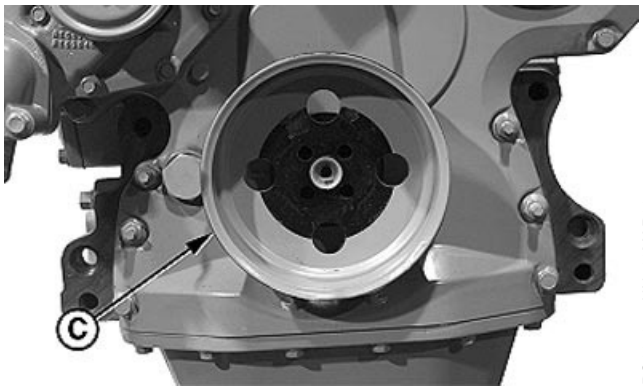

RG9079 –UN–16MAR98

Crankshaft Belt Pulley

Continued on next page

RG,15,DT7459 –19–24MAY02–2/3

Tapered Nose Crankshaft

IMPORTANT: DO NOT use a jaw-type puller to remove vibration damper. Damage to damper could result. Never apply thrust on outer ring of damper. Use of heavy duty puller mounted to auxiliary mounting holes is preferred method for removal. Do not drop or hammer on damper.

1. Install JDG1571 Timing pin.
2. Remove auxiliary pulley from damper, if equipped (shown removed).
3. Remove secondary vibration damper from main damper, if equipped (shown removed).

CAUTION: Damper may suddenly release from crankshaft as cap screw is removed. Plan a safe handling procedure to avoid personal injury or damage to damper.

4. Remove cap screw and washer (A) securing damper to crankshaft.
5. Install a thread protector in nose of crankshaft and secure a heavy duty puller to damper using auxiliary mounting holes (B).
6. Remove damper from crankshaft.

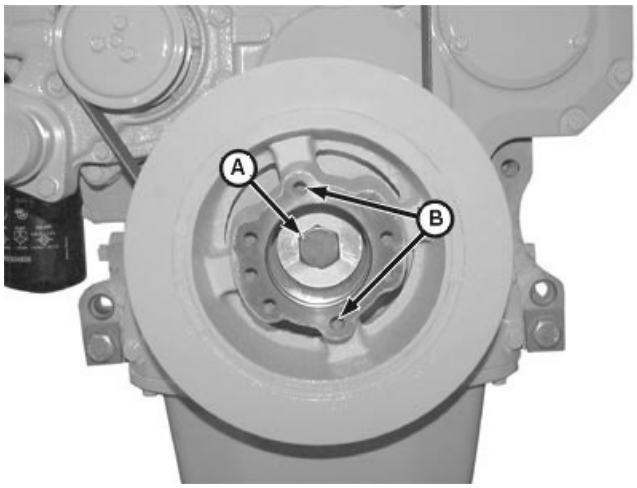

RG11786 –UN–17OCT01

Remove Center Cap Screw

A—Cap Screw and Washer
B—Auxiliary Mounting Holes (8 Used)

RG,15,DT7459 –19–24MAY02–3/3

Install Pulley or Vibration Damper and Pulley

Straight Nose Crankshaft

02
040
6

1. Install belt pulley (A).
2. Position damper on crankshaft. Handle vibration damper with care to avoid impact damage.

A—Pulley

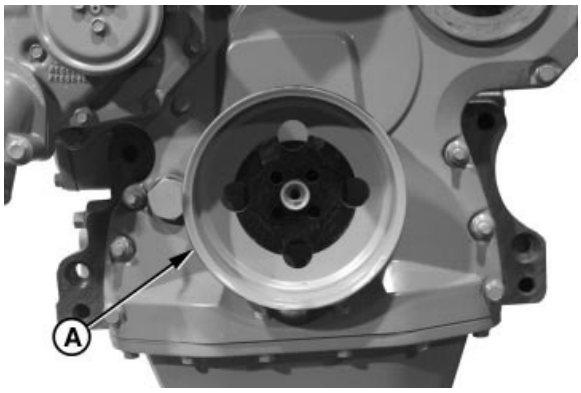

RG7510A –UN–04NOV97

Crankshaft Belt Pulley

RG,15,DT7458 –19–10DEC03–1/5

IMPORTANT: Damper or pulley-to-crankshaft cap screw must be SAE Grade 8 or higher. Always use new cap screws.

3. Install cap screws (B) and tighten in a cross sequence to initial torque specification.
4. Tighten cap screws to final specifications. Use a criss-cross sequence to tighten.

Crankshaft Damper Pulley Cap Screws—Straight Nose Crankshaft —Specification

Outer Cap Screw Initial Tightening—Torque	20 N•m (15 lb-ft.)
Four Cap Screw Mounted Damper Final (Dry)—Torque	63 N•m (47 lb-ft)
Five Cap Screw Mounted Damper (4 Outer Cap Screws) Final (Lubricated)—Torque	80 N•m (60 lb-ft)

NOTE: Check parts catalog for specific cap screw and washer applications.

5. If equipped, install cap screw and washer (C). Tighten to specification.

Crankshaft Damper Pulley Cap Screws—Straight Nose Crankshaft —Specification

Five Cap Screw Mounted Damper (Center Cap Screw-Lubricated)—Torque	150 N•m (111 lb-ft)

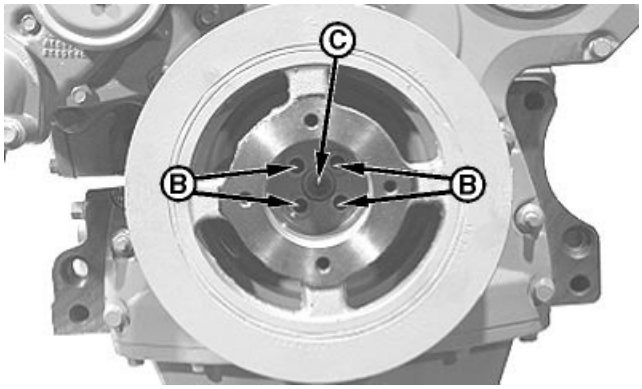

RG9080 –UN–16MAR98

Damper and Pulley

B—Cap Screws
C—Center Cap Screw

Continued on next page

RG,15,DT7458 –19–10DEC03–2/5

Tapered Nose Crankshaft

IMPORTANT: Never apply thrust on outer ring of damper. Do not drop or hammer on damper.

1. Install JDG1571 Timing pin.
2. Clean nose of crankshaft using LOCTITE® 7649 (TY16285) clean and cure primer.

NOTE: DO NOT over apply retaining compound. Use only a thin coat of retaining compound to avoid difficulty in removal of vibration damper.

3. Apply a light 2mm—3mm (.079—.118 in.) bead of LOCTITE® 680 (TY15969) retaining compound (maximum strength) (C) around the leading edge of the crankshaft nose.
4. Position damper, hub or pulley on crankshaft. Handle with care to avoid impact damage.

NOTE: Check parts catalog for specific cap screw and washer applications.

Option codes 4107 and 4108 require a special center bolt washer (R517237). Washer MUST be installed with recess facing away from crankshaft.

5. If equipped, install single center hole mounted pulley (D) to hub.

IMPORTANT: Damper or pulley-to-crankshaft cap screw must be Class 12.9 or higher. Always use new cap screw.

6. Dip mounting cap screw in clean SAE30 engine oil.
7. Install cap screw and washer (A). Tighten cap screw to specification.

A—Cap Screw and Washer
B—Auxiliary Pulley Mounting Holes
C—Retaining Compound
D—Crankshaft Pulley

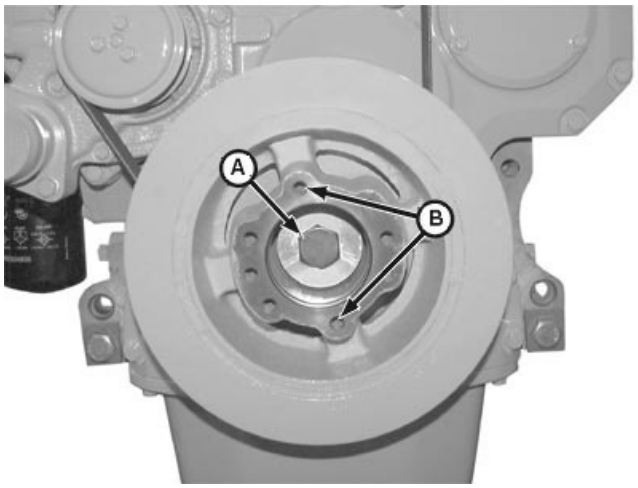

RG11786 –UN–17OCT01

Install Center Cap Screw

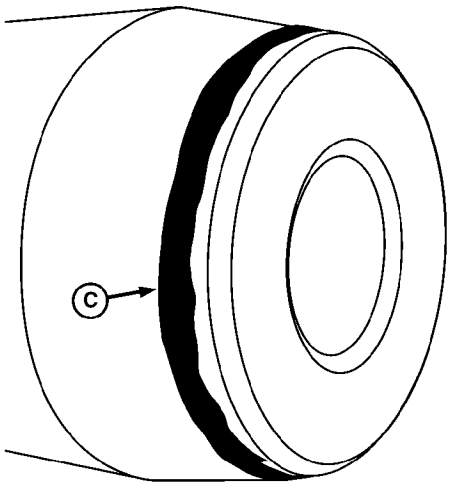

RG12355 –UN–31MAY02

Retaining Compound Application

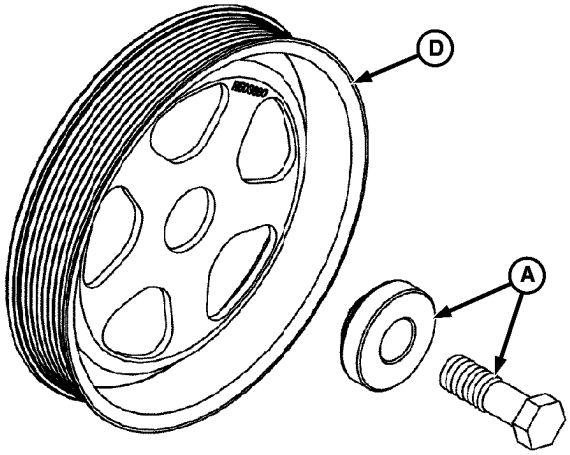

RG12412 –UN–10JUL02

LOCTITE is a registered trademark of Loctite Corp.

Continued on next page

RG,15,DT7458 –19–10DEC03–3/5

Specification	
Center Damper Mounting Cap Screw (Tapered Nose Crankshaft)—Torque	500 N•m (369 lb-ft)

8. Install secondary vibration damper or auxiliary pulley (if equipped) to main vibration damper using 6 cap screws. Tighten capscrews to specification.

Specification	
Seondary Vibration Damper-to-Main Vibration Damper or Auxiliary Pulley-to-Vibration Damper Cap Screws—Torque	70 N•m (52 lb-ft)

RG,15,DT7458 –19–10DEC03–4/5

9. If equipped with front PTO pulley, insure washer (A) is installed with the smaller diameter facing to the front of the engine.

A—Washer

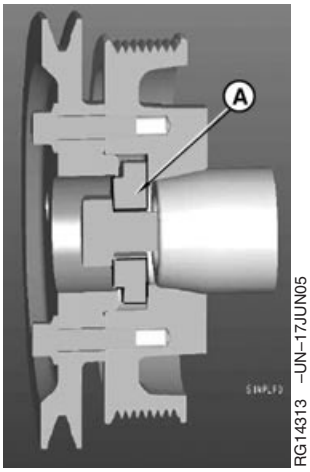

Front PTO Pulley - 4 Cylinder Engine

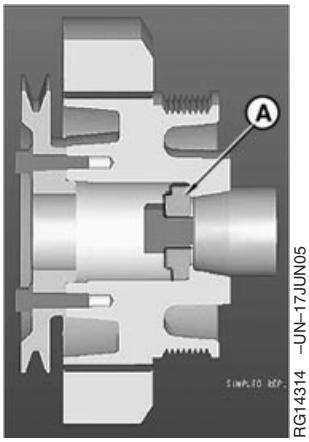

Front PTO Pulley - 6 Cylinder Engine

RG,15,DT7458 –19–10DEC03–5/5

Replace Front Crankshaft Oil Seal and Wear Sleeve

NOTE: This procedure is for removal and installation of the front oil seal and wear sleeve with timing gear cover installed.

Early production engines may be equipped with a two piece front oil seal/wear sleeve or front oil seal and no wear sleeve; however, installation of a wear sleeve is recommended for service whenever front oil seal is replaced.

Later production engines may be equipped with a unitized front oil seal/wear sleeve.

Two piece front oil seal/wear sleeve may be replaced with unitized front oil seal/wear sleeve as service parts become available.

Front Oil Seal/Wear Sleeve Installation Table

Refer to following table for proper oil seal/wear sleeve applications and installation.

Continued on next page

RG,15,DT7455 –19–04DEC03–1/14

FRONT OIL SEAL/WEAR SLEEVE INSTALLATION TABLE

Timing Gear Cover Type	Crankshaft Type	Timing Wheel	Front Seal Type	Seal Installation Dimension	Wear Sleeve	Sleeve Installation Dimension
Tier 1—W/Out Timing Wheel Clearance	Tier 1—Straight W/Out Timing Wheel Machining	No	Non-Unitized	Flush[a]	Yes	Against crank gear
Tier 2—With Timing Wheel Clearance	Tier 1—Straight W/Out Timing Wheel Machining	No	Non-Unitized	Flush[b]	Yes	12.7 mm ahead of crank gear[c]
Tier 1—W/Out Timing Wheel Clearance	Tier 2—Straight With Timing Wheel Machining	No	Unitized Only	17.3 mm from crank nose[d]	Unitized Only	Unitized Only
Tier 2—With Timing Wheel Clearance	Tier 2—Straight With Timing Wheel Machining	No	Non-Unitized	Flush[b]	Yes	12.7 mm ahead of crank gear[c]
Tier 2—With Timing Wheel Clearance	Tier 2—Straight With Timing Wheel Machining	Yes	Non-Unitized	Flush[b]	Yes	Against timing wheel
Tier 2—With Timing Wheel Clearance	Tier 2—Straight With Timing Wheel Machining	Yes	Unitized	Flush[b]	No	N/A
Tier 1—W/Out Timing Wheel Clearance	Tier 1—Straight W/Out Timing Wheel Machining	No	Unitized	17.3 mm from crank nose[e]	No	N/A
Tier 2—With Timing Wheel Clearance	Tier 1—Straight W/Out Timing Wheel Machining	No	Unitized	8.1 mm from crank nose[b]	No	N/A
Tier 1—W/Out Timing Wheel Clearance	Tier 2—Taper With Timing Wheel Machining	No	Unitized Only	27.2 mm from crank nose[d]	Unitized Only	Unitized Only
Tier 2—With Timing Wheel Clearance	Tier 2—Taper With Timing Wheel Machining	No	Non-Unitized	Flush[b]	Yes	12.7 mm ahead of crank gear[f]
Tier 2—With Timing Wheel Clearance	Tier 2—Taper With Timing Wheel Machining	Yes	Non-Unitized	Flush[b]	Yes	Against timing wheel
Tier 2—With Timing Wheel Clearance	Tier 2—Taper With Timing Wheel Machining	Yes	Unitized	27.2 mm from crank nose[b]	No	N/A

[a]Soon to be only on engines in service.

[b]Installation tool with JDG 954-4 spacer will assemble to correct depth.

[c]Service tool with fabricated spacer will assemble to correct depth. Fabricate spacer to dimensions of: 33.5 mm thick, with a 25.4 mm ID and 50.8 mm OD. Place spacer inside of tool provided in seal service kit.

[d]Service only-will not occur in production. Installation tool, without JDG954-4 spacer, will assemble to correct depth. The seal can be 3 mm proud of the TGC.

[e]Installation tool will bottom out at 17.3 mm. Installation tool, without JDG954-4 spacer, will assemble to correct depth.

[f]Service tool with spacer will assemble to correct depth. Fabricate spacer to dimensions of: 12.7 mm thick with a 50.8 mm OD and a 6.35 mm chamfer.Place spacer inside of tool provided in seal service kit.

Continued on next page

Remove Front Crankshaft Oil Seal—Two Piece or Unitized

1. Remove poly-vee belts.
2. Remove vibration damper/pulley or pulley from crankshaft as previously instructed in this group.
3. Check oil seal (A) for wear, damage, or leakage.

IMPORTANT: On unitized oil seal applications holes must be drilled at outer edge of seal case. Screws will pull seal against wear ring, thereby removing both pieces.

4. Center punch seal casing at 12 o'clock position and drill 1/8 in. hole in casing.

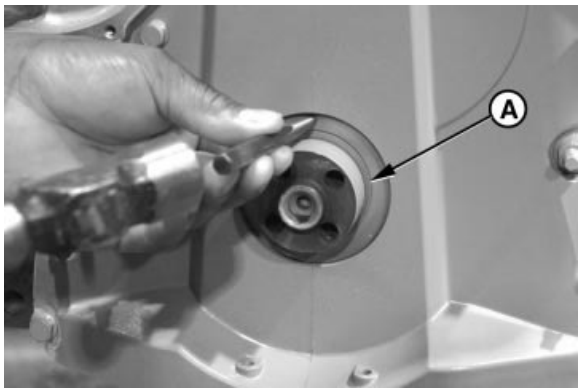

Crankshaft Oil Seal/Wear Sleeve

A—Oil Seal

RG,15,DT7455 –19–04DEC03–3/14

5. Remove seal from timing gear cover using JDG22 Seal Remover or JDG719 Seal Puller Adapter along with JDE38-2 Shank and JDE38-3 Slide Hammer (B). Be careful not to damage seal bore in timing gear cover.

B—Seal Removing Tool

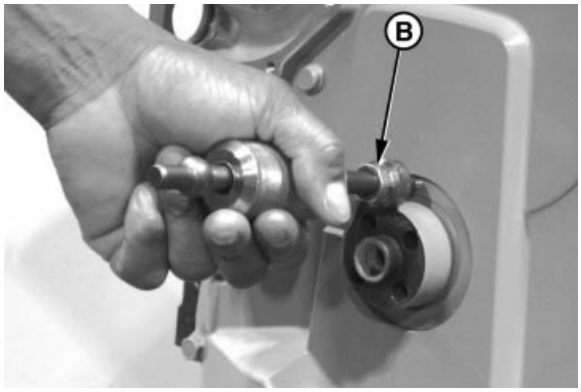

Slide Hammer Installed in Oil Seal

Continued on next page

RG,15,DT7455 –19–04DEC03–4/14

Remove Crankshaft Wear Sleeve—Two Piece Seal (If Equipped)

1. Rotate crankshaft using JDE81-1 or JDE83 Flywheel Turning Tool and lock flywheel with JDG1571 or JDE81-4 Timing Pin.
2. Back out forcing screw and position collet from JDG992-1 Front Wear Sleeve Puller onto crankshaft flange until threaded ID contacts wear sleeve.

NOTE: You may want to apply inward pressure on collet as it is threaded onto wear sleeve.

3. Thread collet onto wear sleeve and tighten securely. Use a long breaker bar and tighten collet until wear sleeve spins on crank flange.
4. Lubricate threads of forcing screw. Tighten forcing screw until flange on wear sleeve is at least 4 mm (0.16 in.) from crankshaft gear.
5. Loosen forcing screw and remove threaded collet from wear sleeve.



Crankshaft Wear Sleeve Removal Tool

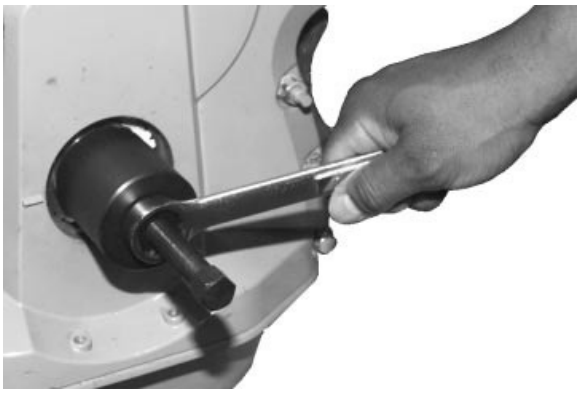

Crankshaft Wear Sleeve Removal Tool

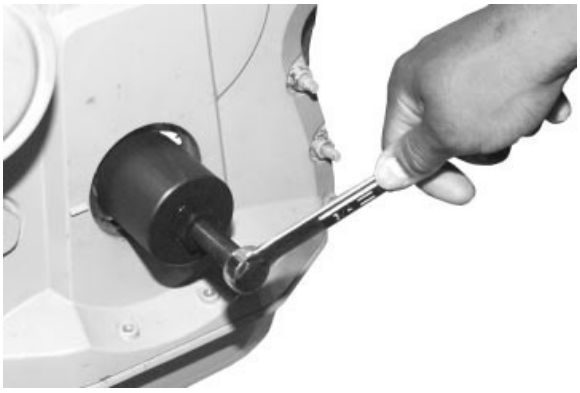

Crankshaft Wear Sleeve Removal Tool

Continued on next page RG,15,DT7455 –19–04DEC03–5/14

6. Position three 313727 Split Collets from JDG992-2 Front Wear Sleeve Puller (using narrower lip) around OD of wear sleeve flange with 221761 End Cap and 311099 Forcing Screw.



Front Wear Sleeve Removal Tool

RG,15,DT7455 –19–04DEC03–6/14

7. Slide 221760 Sleeve over collets to secure puller assembly.



Front Wear Sleeve Removal Tool

Continued on next page

RG,15,DT7455 –19–04DEC03–7/14

NOTE: If wear sleeve flange begins to roll during removal, remove puller assembly and use the wider lip of collets to grasp wear sleeve.

8. Tighten forcing screw until wear sleeve is removed from crankshaft flange.

9. Clean crankshaft flange using Brake Kleen, Ignition Cleaner, or equivalent.



Front Wear Sleeve Removal Tool

RG,15,DT7455 –19–04DEC03–8/14

Install Crankshaft Wear Sleeve—Two Piece Seal

NOTE: Some engines manufactured in 1999—2000 are not equipped with front wear sleeves; however, wear sleeve is recommended for service whenever front oil seal is replaced.

1. Coat ID of new wear sleeve with LOCTITE® 680 Retaining Compound.

2. Place wear sleeve (A) on nose of crankshaft with flange of sleeve toward crankshaft.

A—Wear Sleeve

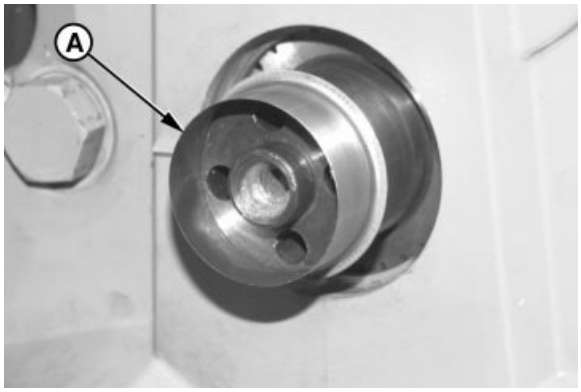

Crankshaft Wear Sleeve

LOCTITE is a registered trademark of Loctite Corp.

Continued on next page

RG,15,DT7455 –19–04DEC03–9/14

NOTE: Later engines with electronic fuel systems (VP44 or DE10 injection pumps) and all four-valve head engines will have a timing wheel on the front of the crankshaft.

On some engines a fabricated spacer will need to be made and placed inside of installation tool to properly set wear sleeve depth.

3. Position installation tool (B) provided in front wear sleeve kit over wear sleeve (C). Using a dead blow hammer, install wear sleeve to proper depth. See FRONT OIL SEAL/WEAR SLEEVE INSTALLATION TABLE earlier in this procedure.

4. Clean any sealant from OD of crankshaft flange and wear sleeve.

B—Installation Tool
C—Wear Sleeve

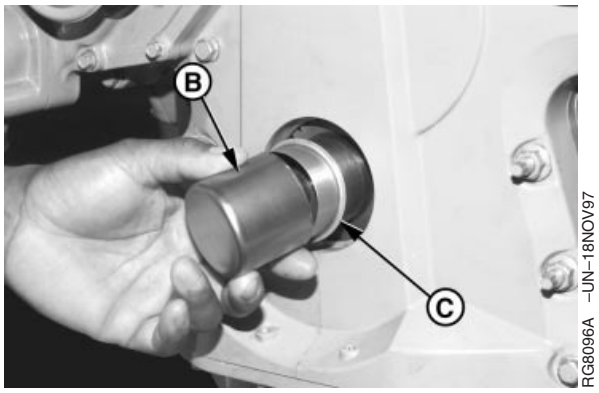

Crankshaft Wear Sleeve

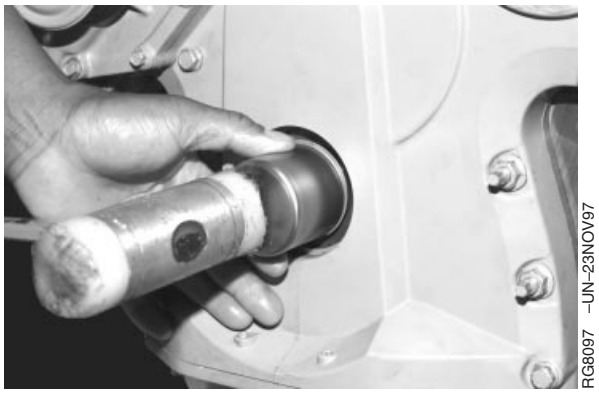

Installing Crankshaft Wear Sleeve

Continued on next page RG,15,DT7455 –19–04DEC03–10/14

Install Front Crankshaft Oil Seal or Unitized Oil Seal/Wear Sleeve—Straight Nose Crankshaft

NOTE: For proper seal installation depth, see FRONT OIL SEAL/WEAR SLEEVE INSTALLATION TABLE earlier in this procedure.

1. Inspect and clean seal bore in timing gear cover. Check for nicks or burrs. Use a medium-grit emery cloth to smooth rough areas.

IMPORTANT: To ensure proper sealing, the OD of the crankshaft and wear sleeve MUST BE cleaned with Brake Kleen, Ignition Cleaner, or equivalent and dried prior to installing seal (C).

2. Place JDG954-2 Adapter (A) on nose of crankshaft and tighten cap screws.

IMPORTANT: DO NOT allow oil to contact coating on OD of seal.

3. Apply a light coating of clean engine oil to lips of seal and position seal (C) on crankshaft flange. (The spring-loaded side of seal goes into timing gear cover first.)

4. If used place JDG954-4 Spacer (E) onto adapter. (See FRONT OIL SEAL/WEAR SLEEVE INSTALLATION TABLE earlier in this procedure.)

5. Place JDG954-1 Installer (B) over adapter for the non-unitized seal and JDG954-5 for the unitized seal.

NOTE: Guide sleeve is equipped with a notch to clear the cast indicator mark on some early timing gear covers.

6. Place JDG954-6 Guide Sleeve (D) over installer and seal.

A—Adapter
B—Installer
C—Seal
D—Guide Sleeve
E—Spacer

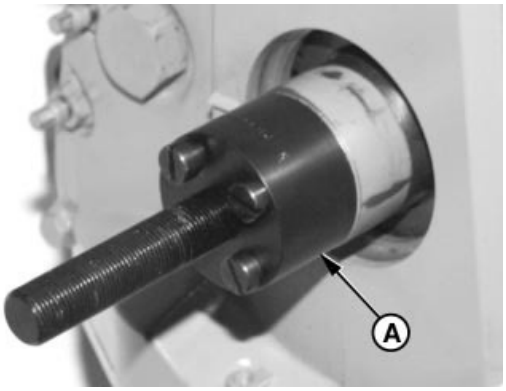

RG7515A –UN–04NOV97

Install Adapter

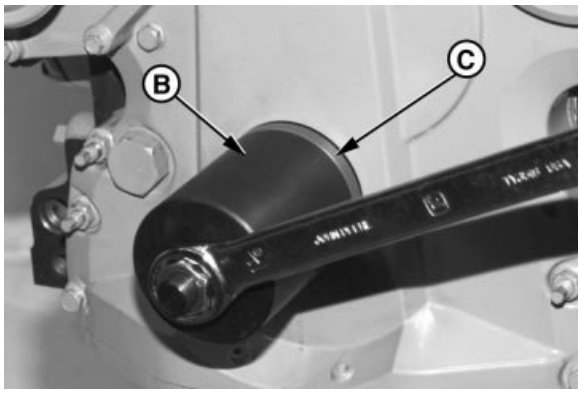

RG7516A –UN–04NOV97

Installer and Seal

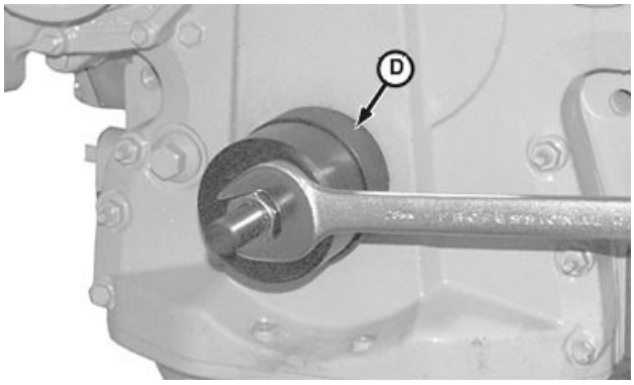

RG11793 –UN–17OCT01

Guide Sleeve

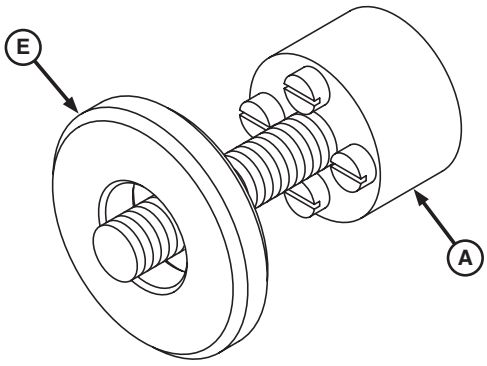

RG12449 –UN–04DEC03

Spacer Installation

Continued on next page

RG,15,DT7455 –19–04DEC03–11/14

7. Tighten nut until seal (C) is installed to proper depth in timing gear cover.

8. Install vibration damper/pulley or pulley on crankshaft. (See INSTALL PULLEY OR VIBRATION DAMPER AND PULLEY in this group.)

9. Install poly-vee belts.

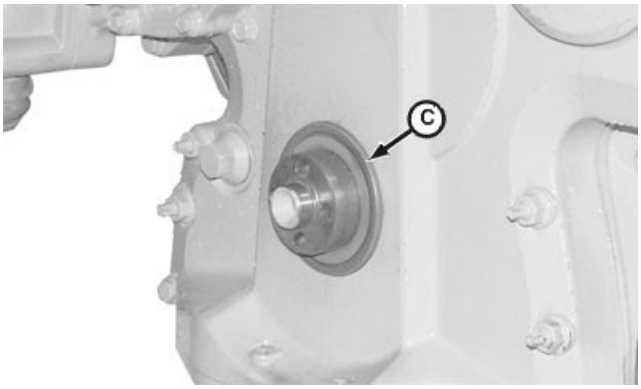

Installed Front Crankshaft Oil Seal

Continued on next page

RG,15,DT7455 –19–04DEC03–12/14

Install Front Crankshaft Oil Seal or Unitized Oil Seal/Wear Sleeve—Tapered Nose Crankshaft

NOTE: For proper seal installation depth, see FRONT OIL SEAL/WEAR SLEEVE INSTALLATION TABLE earlier in this procedure.

1. Inspect and clean seal bore in timing gear cover. Check for nicks or burrs. Use a medium-grit emery cloth to smooth rough areas.

IMPORTANT: To ensure proper sealing, the OD of the crankshaft and wear sleeve MUST BE cleaned with Brake Kleen, Ignition Cleaner, or equivalent and dried prior to installing seal.

2. Install JDG954-8 Forcing Screw (A) into nose of crankshaft until screw seats in bottom of crankshaft.

3. Place JDG954-7 Adapter (B) on forcing screw and fasten with nut (C).

IMPORTANT: DO NOT allow oil to contact coating on OD of seal.

4. Apply a light coating of clean engine oil to lips of seal and position seal on crankshaft flange. (The spring-loaded side of seal goes into timing gear cover first.)

5. If used place JDG954-4 Spacer (G) onto adapter. (SeeFRONT OIL SEAL/WEAR SLEEVE INSTALLATION TABLE earlier in this procedure.)

NOTE: Guide sleeve is equipped with a notch to clear the cast indicator mark on some early timing gear covers.

6. Place JDG954-1 Installer (D) over adapter for the non-unitized seal and JDG954-5 for the unitized seal. Place JDG954-6 Guide Sleeve (E) over installer and seal.

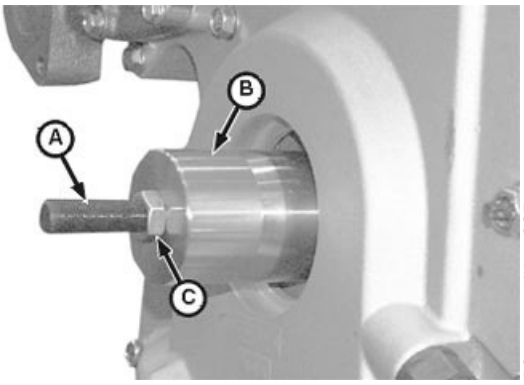

RG11795 –UN–17OCT01

Adapter and Seal Guide

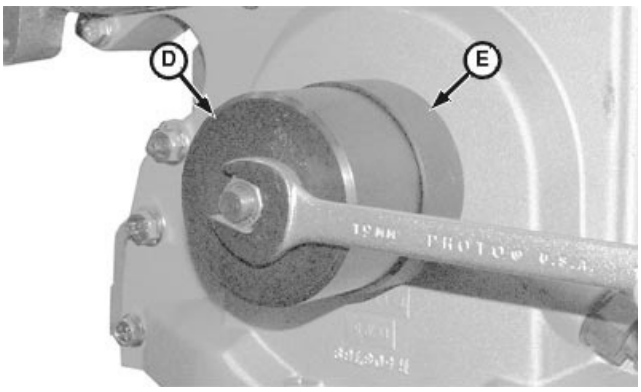

RG11796 –UN–28SEP01

Seal Tool with Sleeve

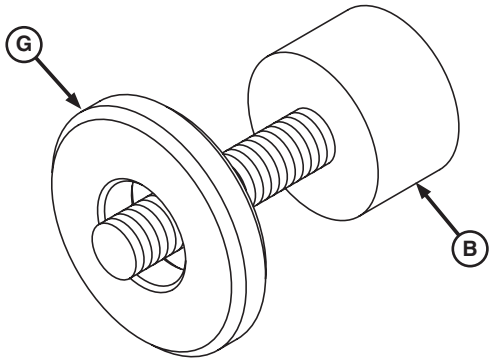

RG12450 –UN–04DEC03

A—Forcing Screw
B—Adapter
C—Nut
D—Installer
E—Guide Sleeve
F—Seal
G—Spacer

Continued on next page

RG,15,DT7455 –19–04DEC03–13/14

7. Install washer and nut from JDG954 kit onto adapter. Tighten nut until seal (F) is installed to proper depth in timing gear cover.

8. Install vibration damper/pulley or pulley on crankshaft. (See INSTALL PULLEY OR VIBRATION DAMPER AND PULLEY in this group.)

9. Install poly-vee belts.

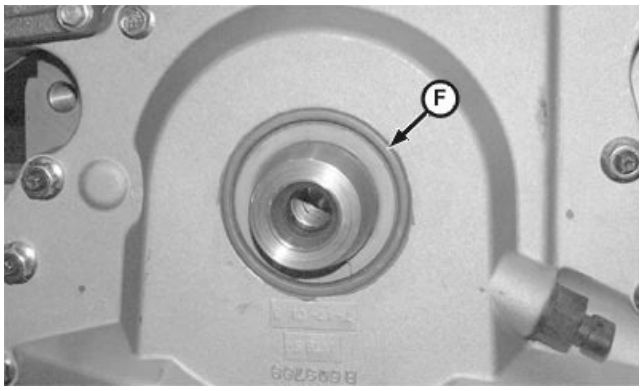

RG11797 –UN–28SEP01

Front Seal Installed

RG,15,DT7455 –19–04DEC03–14/14

Check Crankshaft End Play

Measure end play prior to removing crankshaft to determine condition of thrust bearings.

1. Position dial indicator on contact face of flywheel, on front crankshaft nose, on damper, or front pulley assembly, if installed.

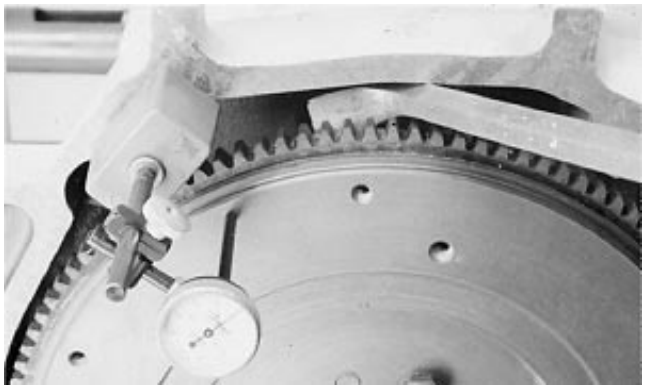

T88331 –UN–14OCT88

Check Crankshaft End Play w/Dial Indicator

Continued on next page

RG,15,DT7454 –19–15OCT01–1/2

IMPORTANT: Do not apply too much pressure with pry bar (A), as this could damage bearings.

2. Using a pry bar, gently push crankshaft as far to rear of engine as possible.
3. Zero the dial indicator.
4. Gently pry the crankshaft as far forward as possible. Note indicator reading. If end play is not within specifications, install new thrust bearing.

Specification

Crankshaft—End Play ..... 0.029—0.357 mm (0.001—0.014 in.)

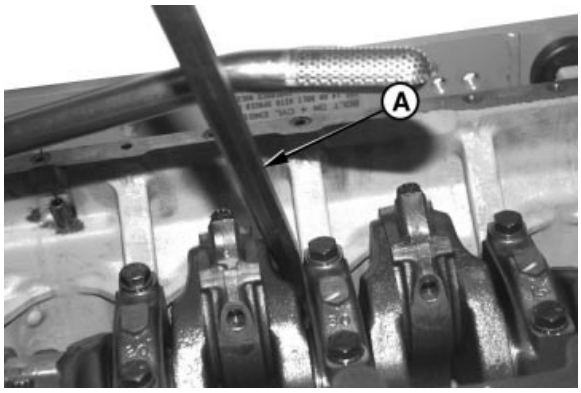

Prying Crankshaft Toward Rear of Engine

A—Pry Bar

RG,15,DT7454 –19–15OCT01–2/2

Inspect Flywheel

1. Inspect the clutch contact face for scoring, overheating, or cracks. Replace or resurface flywheel if defective.
2. Examine flywheel ring gear for worn or broken teeth. Replace ring gear if defective, as described later in this group.

RG,15,DT7465 –19–14NOV97–1/1

Check Flywheel Face Flatness

1. Mount dial indicator base on flywheel housing. Position pointer to contact driving ring mounting surface. Do not allow pointer to contact driving ring mounting holes.

IMPORTANT: Maintain constant end pressure on crankshaft to hold shaft against thrust bearing when measuring flywheel face runout.

2. Rotate flywheel by turning crankshaft. Read total indicator movement. Resurface flywheel face or replace as required.

Specification

Flywheel Face Flatness—	
Maximum Variation	0.23 mm (0.009 in.)
Maximum Variation per 25 mm (1.0 in.) of Travel	0.013 mm (0.0005 in.)

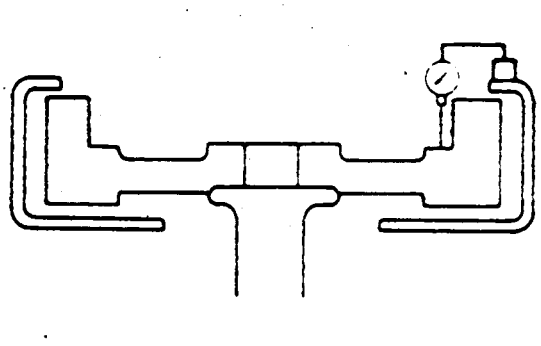

R22213 –UN–14DEC88

Flywheel Face Flatness Check

RG,15,DT7453 –19–14NOV97–1/1

Check Pilot Bearing Bore Concentricity

1. Mount dial indicator on flywheel housing face and position pointer to contact ID of pilot bearing bore in flywheel.

2. Rotate flywheel by turning crankshaft. Read total dial indicator movement.

Specification

Flywheel Bearing Bore Concentricity—Maximum Variation	0.127 mm (0.005 in.)

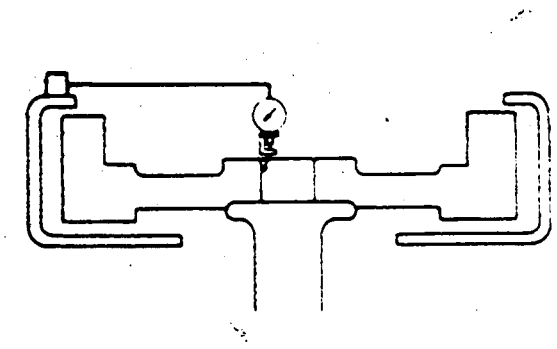

R22214 –UN–14DEC88

Flywheel Bearing Bore Concentricity

DPSG,OUO1004,69 –19–21APR98–1/1

Remove Flywheel

CAUTION: Flywheel is heavy. Plan a proper lifting procedure to avoid personal injury.

1. Remove two cap screws and install guide studs (A) in their place. Remove the remaining cap screws.
2. **On flywheels secured with threaded jack screw holes (B):** Install two jack screws and tighten evenly to remove flywheel.
3. **On all other flywheels:** Pry flywheel off of crankshaft.

NOTE: If flywheel to housing clearance will not allow use of a pry bar, install a punch through timing pin hole and tap on flywheel face to drive from crankshaft.

A—Guide Studs
B—Jack Screw Holes

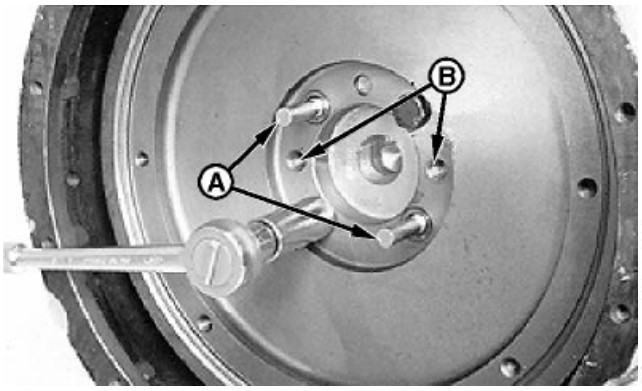

Remove Flywheel

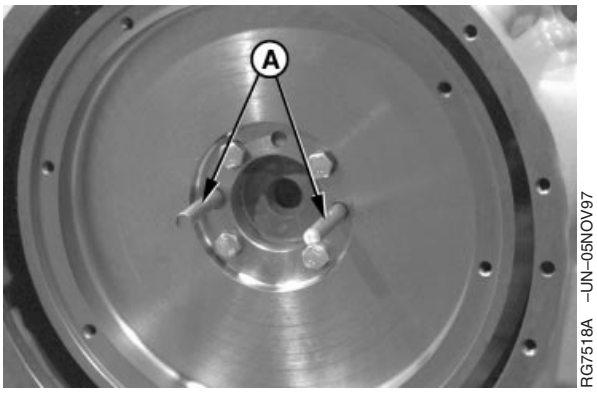

Remove Flywheel

RG,15,DT7452 –19–27MAR00–1/1

Replace Flywheel Ring Gear

CAUTION: Oil fumes or oil can ignite above 193°C (380°F). Use a thermometer and do not exceed 182°C (360°F). Do not allow a flame or heating element to be in direct contact with the oil. Heat the oil in a well ventilated area. Plan a safe handling procedure to avoid burns.

1. Place the flywheel on a solid flat surface.
2. Drive ring gear off with a brass drift (A) and hammer.

IMPORTANT: If flame heat is used, be sure gear is heated uniformly around circumference. DO NOT OVERHEAT. SEE CAUTION. Overheating may also destroy original heat treatment of gear.

3. Heat new ring gear to 148°C (300°F) using either heated oil, oven heat, or flame heat.
4. Turn gear so side with chamfer (B) is toward engine with flywheel installed.
5. Install ring gear against shoulder of flywheel.



RG7519 –UN–05NOV97

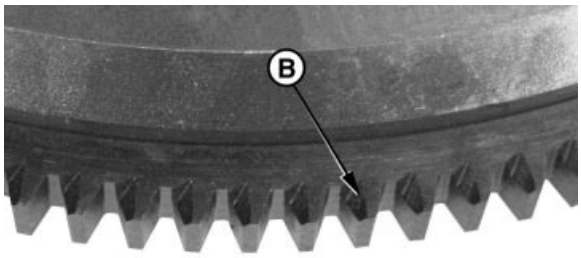

RG7520 –UN–05NOV97

Flywheel Ring Gear Teeth

A—Brass Drift
B—Chamfer

RG,15,DT7451 –19–14NOV97–1/1

Replace Pilot Bearing in Flywheel (If Equipped)

NOTE: Some engines are equipped with a pilot bearing (B) in flywheel (C). Flywheel must be removed from the engine to replace this bearing.

1. With flywheel removed from engine, drive bearing out of flywheel using appropriate disks and driver (A) from D01045AA Bushing, Bearing and Seal Driver Set. Discard bearing.

2. Measure flywheel bore diameter. If bore is larger than specifications, replace flywheel.

Specification	
Flywheel Pilot Bearing Bore (Option Code 1508)—ID	34.978—35.004 mm (1.3770—1.3781 in.)
Flywheel Pilot Bearing Bore (Option Codes 1502 and 1515)—ID	44.978—45.004 mm (1.7708—1.7719 in.)

3. Drive new pilot bearing into rear face of flywheel using appropriate disks and handle from same driver set, until bearing shoulder bottoms on flywheel face. Check bearing for smooth operation.

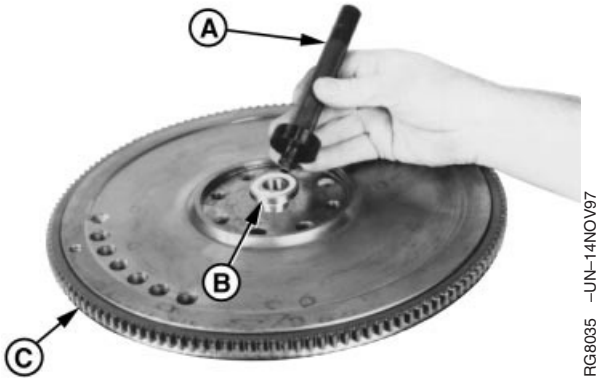

RG8035 –UN–14NOV97

Flywheel Pilot Bearing

A—Bushing Driver
B—Pilot Bearing
C—Flywheel

RG,15,DT7450 –19–15DEC99–1/1

Replace Sleeve in Flywheel (If Equipped)

NOTE: Some engines are equipped with a sleeve (A) in flywheel (B). Flywheel must be removed from the engine to replace this sleeve.

1. With flywheel removed from engine, press sleeve out of flywheel using a bench press. Discard sleeve.

2. Measure flywheel sleeve bore diameter. If bore is larger than specifications, replace flywheel.

Specification	
Flywheel Pilot Sleeve Bore (Option 1573)—ID	55.978—55.004 mm (2.2038—2.1655 in.)
Flywheel Sleeve (Option 1573)—OD	55.054—55.004 mm (2.1675—2.1655 in.)
Sleeve Bore (Option 1573)—ID	39.998—40.024 mm (1.5747—1.5757 in.)

3. Press new sleeve into rear face of flywheel until sleeve shoulder bottoms on flywheel.

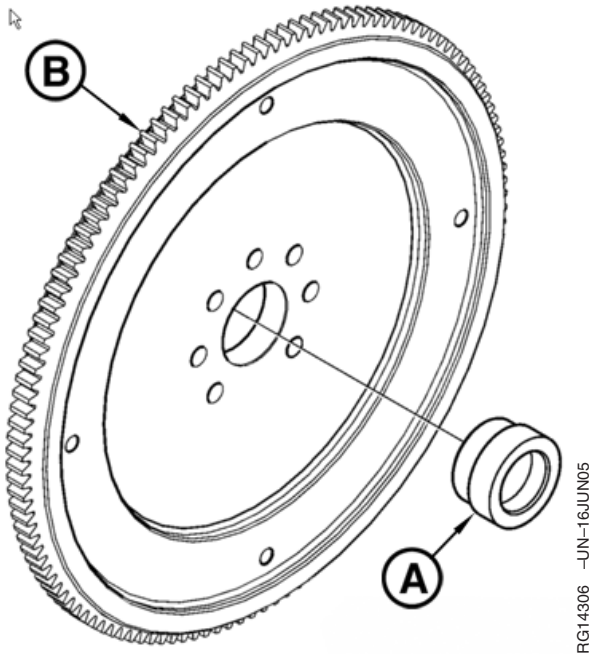

A—Sleeve
B—Flywheel

RG19661,0000002 –19–14JUN05–1/1

Install Flywheel

CAUTION: Flywheel is heavy. Plan a proper handling procedure to avoid injuries.

02
040
26

IMPORTANT: Flywheel MUST BE clean and free of any oil, grease or debris.

NOTE: Engines with flywheel option code 1557 have threaded studs (B) in flywheel. If studs were removed, apply LOCTITE® 271 Thread Lock and Sealer (High Strenght) to threads and install studs into flywheel to end of threads.

CD4045T Engines with flywheel option code 1568 must have a continuous 1.5—2.0 mm (0.06—0.08 in.) bead (C) of LOCTITE® 515 Flexible Form-In-Place Gasket (PM38655) applied to crankshaft flange around all holes and locating pin.

1. Install two guide studs (A) in crankshaft cap screw threaded holes. Place flywheel on studs and slide into position against crankshaft.

IMPORTANT: ALWAYS install new flywheel cap screws when flywheel has been removed.

2. Start cap screws in crankshaft. Do not tighten until guide studs are removed and all cap screws are started. Tighten cap screws to specifications.

Specification	
Flywheel Mounting Cap Screws (Dry)—Torque	138 N•m (102 lb-ft)
Flywheel Mounting Cap Screws (Lubricated)—Torque	110 N•m (81 lb-ft)

A—Guide Studs
B—Threaded Studs
C—Flexible Gasket Pattern

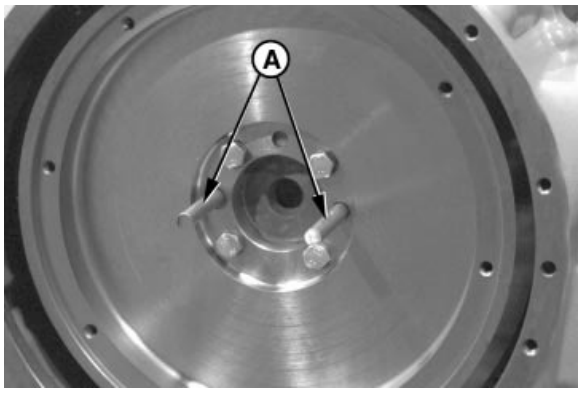

RG7518A –UN–05NOV97

Flywheel and Guide Studs

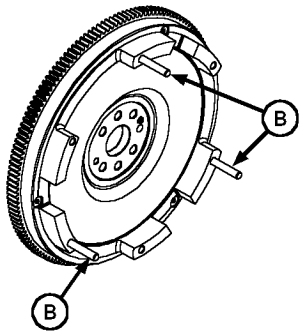

RG10542 –UN–19NOV99

Flywheel (Option 1557)

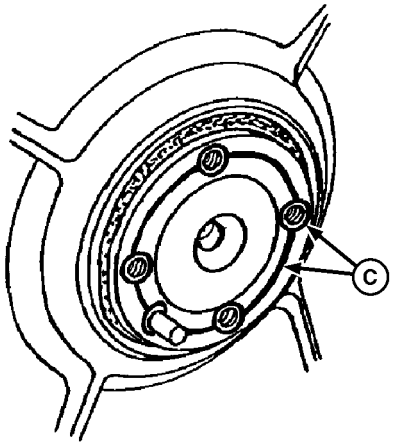

RG11778 –UN–05SEP01

Flywheel (Option 1568) Flexible Gasket Application Pattern

LOCTITE is a registered trademark of Loctite Corp.

RG,15,DT7449 –19–26NOV03–1/1

Crankshaft Rear Oil Seal and Wear Sleeve Handling Precautions

Use the following precautions for handling seal and wear sleeve assembly (A):

- Always install seal and wear sleeve assembly immediately after removal from plastic bag to avoid possible dirt contamination.
- No lubrication of any kind is to contact seal when installing. Use of a lubricant may result in premature seal failure.
- Install oil seal/wear sleeve assembly with the open side of seal and wear sleeve ID chamfer toward the engine. If seal is reversed, engine oil may be lost because grooves in oil seal lip would be incorrect with respect to direction of crankshaft rotation.



RG5640A –UN–31OCT97

Crankshaft Rear Oil Seal

A—Wear Sleeve

RG,15,DT7448 –19–14NOV97–1/1

Remove Crankshaft Rear Oil Seal and Wear Sleeve

The crankshaft rear oil seal (A) and wear sleeve (B) are fabricated as a non-separable part. To remove the oil seal/wear sleeve assembly, the two following procedures can be used depending on special tool availability.

A—Oil Seal
B—Wear Sleeve



RG9083 –UN–16MAR98

Crankshaft Rear Oil Seal and Wear Sleeve

Continued on next page

RG,15,DT7447 –19–14NOV97–1/9

Remove Oil Seal/Wear Sleeve Using JDG698A

1. Adjust forcing screw (A) on JDG698A Seal and Wear Sleeve Remover and position screw so it centers tool on crankshaft flange.
2. Using the slots in JDG698A Remover as a template, mark three locations on seal casing where screws should be installed for removal purposes. Remove tool from crankshaft flange.

A—Forcing Screw

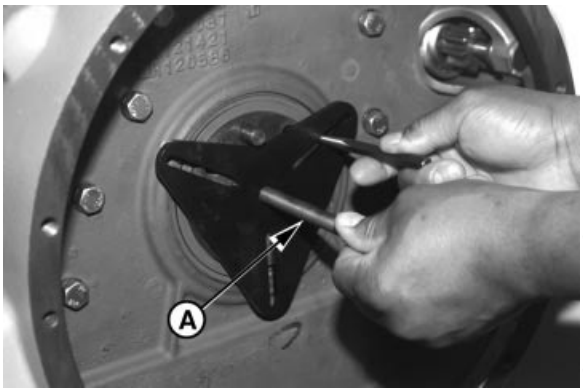

Unitized Crankshaft Rear Oil Seal/Wear Sleeve Puller

RG,15,DT7447 –19–14NOV97–2/9

IMPORTANT: Holes must be drilled at outer edge of seal case. Screws will pull seal against wear ring, thereby removing both pieces.

3. Drill a 3/16 in. hole through wear sleeve lip and seal casing at the three marked locations.
4. Position JDG698A Remover on end of crankshaft.



Setting Puller Removal Screws

Continued on next page

RG,15,DT7447 –19–14NOV97–3/9

5. Install three 2-1/2 in. (approximate) sheet metal screws with washers (B) into slots of removal tool and thread screws into holes in seal casing. Evenly tighten screws until plate is flush with rear face of crankshaft.

6. Tighten forcing screw (plate should pull evenly against the three screws) until seal and wear sleeve assembly is removed from engine

B—Sheet Metal Screws

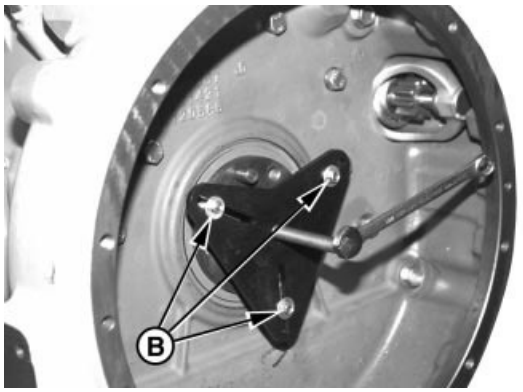

RG7401 –UN–03NOV97

Puller in Position

RG,15,DT7447 –19–14NOV97–4/9

Remove Oil Seal/Wear Sleeve Using JDG645E

1. Place and center JDG645E Rear Crankshaft Oil Seal/Wear Sleeve Puller cap screws and driver plate assembly onto crankshaft rear face. Then, using snap ring pliers, set the thinner shoulder of ring tool between sleeve flange and seal case.

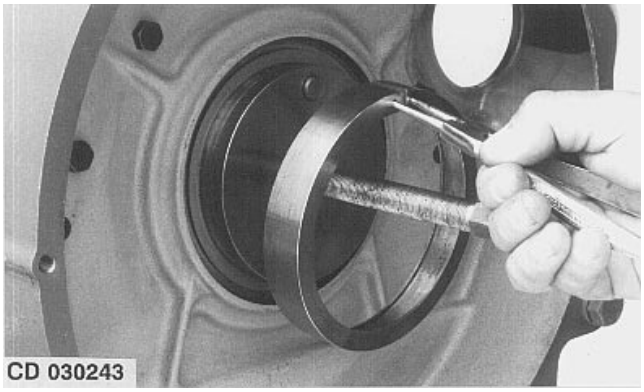

CD30243 –UN–06MAR95

Rear Oil Seal/Wear Sleeve Removal

Continued on next page

RG,15,DT7447 –19–14NOV97–5/9

2. Secure the assembly with a clamp, then gradually tighten the screw until wear sleeve is extracted.

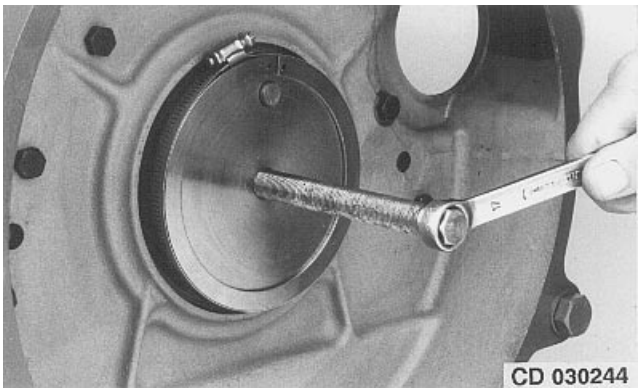

CD030244 –UN–06MAR95

Rear Oil Seal/Wear Sleeve Removal

RG,15,DT7447 –19–14NOV97–6/9

3. Cut the rubber lip (now accessible) and remove it.

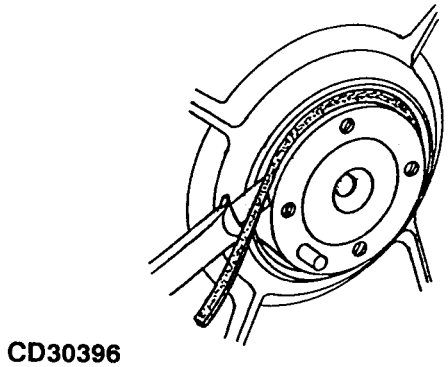

CD30396 –UN–10MAY95

Rear Oil Seal Removal

Continued on next page

RG,15,DT7447 –19–14NOV97–7/9

4. Using a punch and hammer, tap the seal case toward engine at any location until seal case pivots.

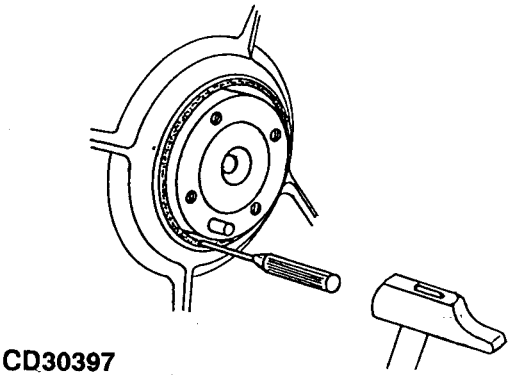

Rear Seal Removal

CD30397 –UN–10MAY95

RG,15,DT7447 –19–14NOV97–8/9

5. Using JDG22 Seal Remover, extract seal case.

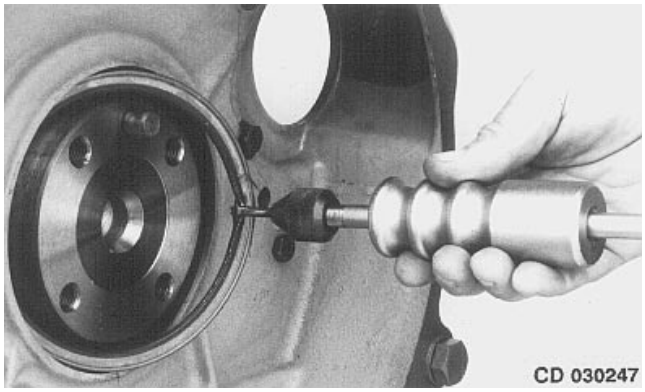

Rear Oil Seal/Wear Seal Removal

CD30247 –UN–06MAR95

RG,15,DT7447 –19–14NOV97–9/9

Clean and Inspect Crankshaft Flange

1. Clean OD of crankshaft flange and ID of flywheel housing with cleaning solvent, acetone, or any other suitable cleaner that will remove sealant, if previously applied. (Brake Kleen, Ignition Cleaner and Drier are examples of commercially available solvents that will remove sealant from flange.)

2. Look for nicks or burrs on wear ring surface and bore in flywheel housing. If necessary, use polishing cloth to remove nicks or burrs.

   Finish cleaning by wiping flange with a clean rag.



Clean Crankshaft Flange

DPSG,OUO1004,75 –19–02OCT01–1/1

Install Crankshaft Rear Oil Seal and Wear Sleeve

IMPORTANT: No lubrication of any kind is to contact seal when installing. Use of a lubricant may result in premature seal failure. Install seal and wear sleeve assembly immediately after removal from plastic bag to avoid possible dirt contamination.

1. Clean OD of crankshaft flange and ID of flywheel housing with cleaning solvent, acetone, or any other suitable cleaner that will remove sealant, if previously applied. (Brake Kleen, Ignition Cleaner and Drier are examples of commercially available solvents that will remove sealant from flange.) Make sure that OD of crankshaft flange and ID of seal housing bore are free from nicks or burrs.

2. The standard oil seal/wear sleeve assembly can be installed using JT30040B or KCD10002A Rear Oil Seal/Wear Sleeve Installer Set. Teflon unitized rear oil seal/wear sleeve assembly must be installed using JDG476 Rear Oil Seal/Wear Sleeve Installation Tool Set.



Clean Crankshaft Flange

Continued on next page

RG,15,DT7446 –19–10DEC03–1/6

Install Rear Oil Seal/Wear Sleeve Using JT30040B

NOTE: Early JT30040 Tool Set will need a modification to the JT30041 Pilot Tool. Remove locating boss (C) flush with crankshaft face (D). Add an "A" suffix to the JT30041 tool number. (Newer tools with "A" suffix do not need to be modified.)

1. Install JT30041A Pilot (A) from the JT30040B Seal/Wear Sleeve Installer Set on end of crankshaft using two 38 mm (1-1/2 in.) socket-head cap screws. Tighten both cap screws until they touch base of pilot, then back them off approximately 1/2 turn.

2. Install JT30042 Driver over JT30041A Pilot until driver cross-plate bottoms on pilot. This will properly center pilot with crankshaft flange.

NOTE: It may be necessary to lift up on pilot to install driver to full depth over pilot and crankshaft flange.

3. Tighten two pilot socket head cap screws (B) securely. Remove driver from pilot.

A—Pilot
B—Cap Screws
C—Locating Boss
D—Crankshaft Face JT30041 Pilot (Early Version)

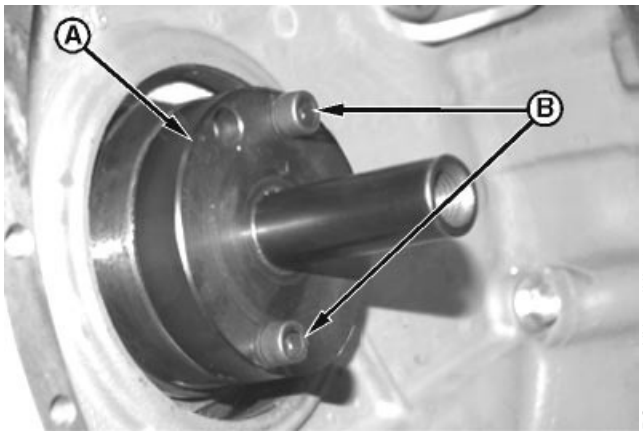

RG9442 –UN–07JUL98

Rear Oil Seal/Sleeve Pilot Tool

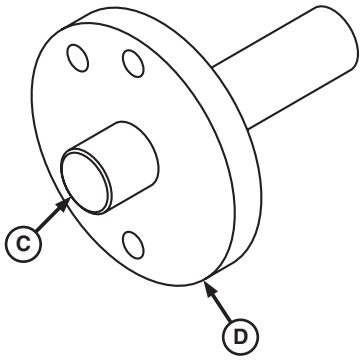

RG11779 –UN–06SEP01

JT30041 Modification

Continued on next page

RG,15,DT7446 –19–10DEC03–2/6

IMPORTANT: Handle the rear oil seal and sleeve assembly carefully. If wear sleeve surface is scratched, gouged or any sealant (liquid) is present, order a new seal assembly.

4. Carefully start oil seal (B) and wear sleeve over pilot and crankshaft flange with open side of seal toward engine.

5. Attach JT30042 Driver (A) and thrust washer to the guide plate with cap screw. Tighten the cap screw until driver bottoms on pilot.

6. Remove seal driver and pilot plate. Check that seal and wear sleeve assembly is properly positioned on crankshaft flange and installed square in flywheel housing bore.

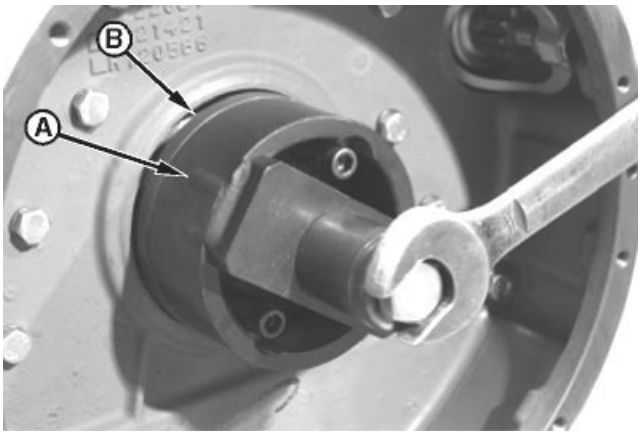

RG9443 –UN–07JUL98

Rear Oil Seal/Sleeve Driver Tool

A—Driver
B—Seal

Continued on next page

RG,15,DT7446 –19–10DEC03–3/6

Install Rear Oil Seal/Wear Sleeve Using KCD10002A

NOTE: Due to a diameter change of the crankshaft bore, it may be necessary to suppress the pilot pin from KCD10002. With this modification, KCD10002 becomes KCD10002A

1. Position guide (A) from KCD10002A Rear Oil Seal/Wear Sleeve Installer Set on crankshaft end with two cap screws finger tight.
2. Install new oil seal/wear sleeve assembly on guide with open side of seal toward engine. Center the guide and tighten cap screws.
3. Slide driver (B) onto guide (A) and gradually tighten hex nut until driver bottoms on guide.
4. Remove seal driver and guide. Check that seal and wear sleeve assembly is properly positioned on crankshaft flange and installed square in flywheel housing bore.

A—Guide
B—Driver

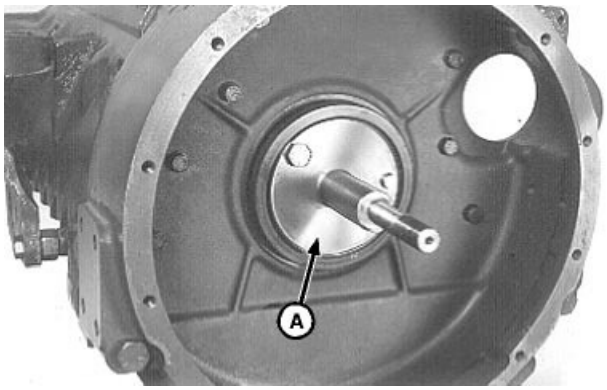

RG9136 –UN–18MAY98

KCD10002A Guide

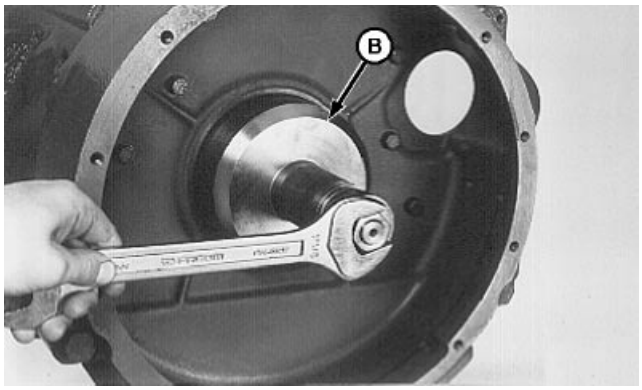

RG9137 –UN–18MAY98

KCD10002A Driver

Continued on next page

RG,15,DT7446 –19–10DEC03–4/6

Install Rear Oil Seal/Wear Sleeve Using JDG476

IMPORTANT: DO NOT SEPARATE seal and wear sleeve. If parts become separated, discard and replace with a new assembly.

Oil seal/wear sleeve must be installed with wear sleeve flange away from the engine. The part number and instructions must be visible when installed on the engine.

No lubrication is to be used on the sealing portion of the oil seal/wear sleeve or the sleeve inside diameter. A light coating of engine oil is to be used on the rubber outside diameter of the seal only.

1. Make sure the OD of crankshaft flange and ID of seal housing are free from nicks or burrs. Restore damaged surfaces with file or emery cloth. Clean with compressed air.

2. Using a new gasket, install oil seal housing (without seal/wear sleeve assembly) on cylinder block. Install cap screws with washers, but do not tighten at this time.

NOTE: JDG478 Driver is designed to center the oil seal housing in relation to the crankshaft. Use of a dial indicator to measure seal housing run-out, is NOT REQUIRED.

3. Slip JDG478 Driver (B) over flange of crankshaft and into bore of oil seal housing, to center seal housing.

4. Position bottom of oil seal housing flush with cylinder block oil pan surface. Tighten seal housing-to-cylinder block cap screws to specification. Remove driver.

Specification

Seal Housing-to-Cylinder Block
Cap Screw—Torque ..... 27 Nm (20 lb-ft)

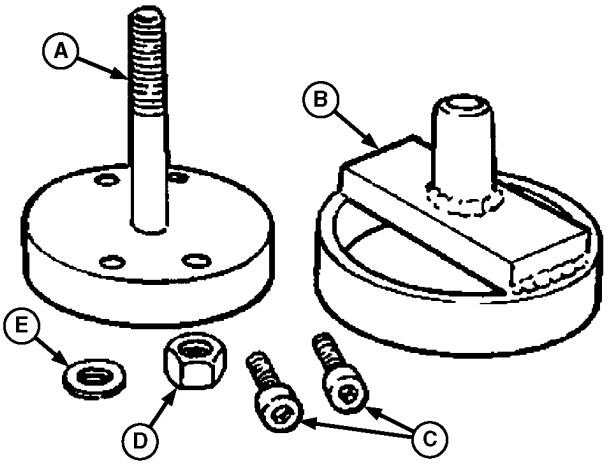

RG12447 –UN–04DEC03

JDG476

A—Pilot
B—Driver
C—Socket Head Cap Screw (2 used)
D—Nut
E—Washer

Continued on next page

RG,15,DT7446 –19–10DEC03–5/6

NOTE: Do NOT apply Loctite or Permatex sealant to the crankshaft. Seal is already coated with a sealant material.

5. Install JDG477 Pilot (A) on end of crankshaft. Use two socket head screws (C) to fasten pilot to crankshaft.

IMPORTANT: Handle seal carefully. Do not allow OIL to get on any part of wear sleeve O.D. or on seal. Coat RUBBER O.D. of new seal with a light coating of engine oil. Carefully start seal/wear sleeve assembly on JDG477 Pilot (open end of seal toward engine).

Make sure that plate does not cover the two cap screws. Plate must bottom on face of pilot, not on cap screws. When the tool bottoms, seal and wear sleeve will be correctly positioned.

6. Position JDG478 Driver over threaded stud of pilot. Install washer (E) and nut (D) on stud. Tighten nut to draw the driver “in” until it bottoms on pilot.

7. Remove JDG476 tool set from engine.

RG,15,DT7446 –19–10DEC03–6/6

Remove Flywheel Housing

1. Remove flywheel. (See REMOVE FLYWHEEL earlier in this group.)
2. Remove starter if desired (see REMOVE AND INSTALL STARTER in Group 100). Starter and flywheel housing may be removed as an assembly.
3. Remove crankshaft rear oil seal as described earlier in this group.

CAUTION: The flywheel housing is heavy. Plan a proper handling procedure to avoid injuries.

4. Remove flywheel housing-to-cylinder block cap screws and flywheel housing-to-oil pan cap screws. Remove flywheel housing from block.

NOTE: Illustration shows three different types of flywheel housings used:

- *SAE 2, 3, and 4 housing (A).*
- *Standard flat housing (B).*
- *Special flat housing (C).*

Some flywheel housings may use a sheet metal plate as part of the enclosure; remove as necessary.

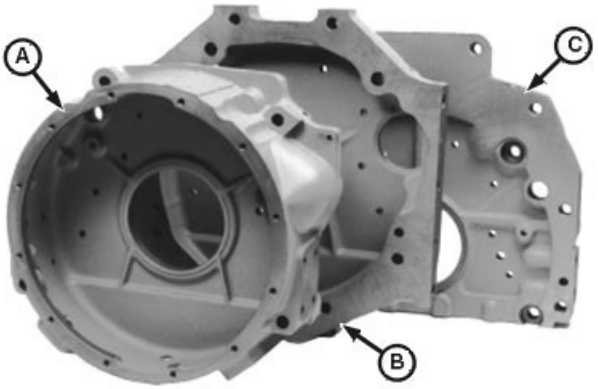

RG10568 –UN–10JAN00

Flywheel Housings

A—SAE 2, 3 and 4 Housing
B—Standard Flat Housing
C—Special Flat Housing

RG,15,DT7445 –19–02OCT01–1/1

Remove and Install Crankshaft Timing Wheel (Two-Valve Head Engines with VP44 or DE10 Fuel Injection Pumps and All Four-Valve Head Engines)

IMPORTANT: Timing wheel is not reusable. If timing wheel is removed from crankshaft, a new timing wheel must be installed.

NOTE: Engine with stamped metal timing wheel shown. Procedures for cast metal timing wheel is the same.

Remove Timing Wheel

1. Lock engine at No. 1 TDC.
2. Remove timing gear cover. (See REMOVE TIMING GEAR COVER in Group 050.)
3. Clean crankshaft nose.

NOTE: Tapered nose crankshafts MUST have a thread protector installed in nose before using puller to remove timing wheel.

4. Remove timing wheel (A) using standard puller as shown.

Install Timing Wheel

NOTE: All other drive gears, oil pump, and balance shafts MUST be installed before installing timing wheel.

Ensure that the word "FRONT" (stamped on the face of the timing wheel) is facing out from the engine.

1. Apply thread lock and sealer (high strength) to crankshaft nose and timing wheel bore.
2. Slide timing wheel onto crankshaft nose with recess side toward timing gear cover. Be sure keyway (B) in timing wheel is properly aligned with Woodruff key.

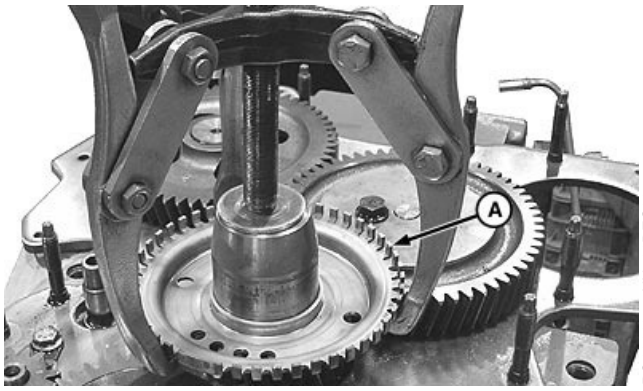

Remove Timing Wheel

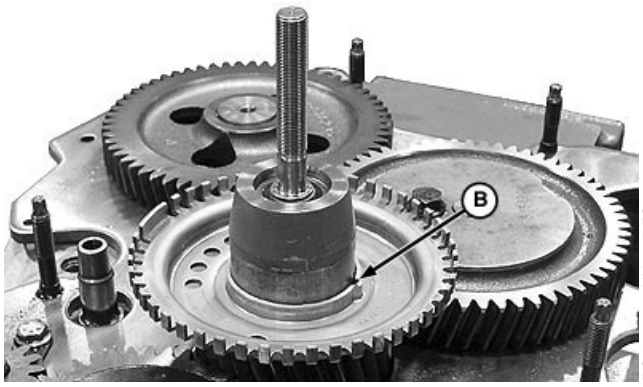

Timing Wheel Keyway

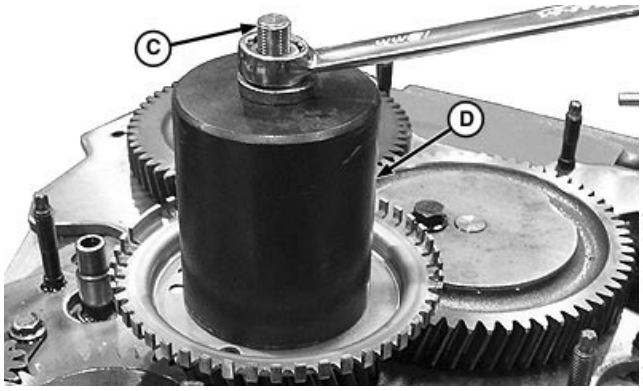

Install Timing Wheel

A—Timing Wheel
B—Keyway
C—JDG954-2 Adapter (Shown)
D—JDG954-1 Installer

Continued on next page

3. Install tool adapter (C) into nose of crankshaft until adapter seats in bottom of crankshaft. Use JDG954-2 Adapter for straight nose crankshafts or JDG954-7 for tapered nose crankshafts.

4. Install JDG954-1 Installer (D) over adapter.

5. Tighten nut until timing wheel firmly seats against gear face.

6. Remove adapter and installer and install timing gear cover. (See INSTALL TIMING GEAR COVER in Group 050.)

DPSG,OUO1004,1126 –19–01DEC03–2/2

Remove Crankshaft Main Bearings

1. Drain oil from engine crankcase and remove oil pan.

2. Remove timing gear cover. (See REMOVE TIMING GEAR COVER in Group 050.)

3. Remove cylinder block front plate. (See REMOVE CYLINDER BLOCK FRONT PLATE in Group 050.)

4. Remove flywheel housing. (See REMOVE FLYWHEEL HOUSING in this group.)

5. Remove connecting rods from crankshaft. (See REMOVE PISTONS AND CONNECTING RODS in Group 030.)

Continued on next page

RG,15,DT7444 –19–14NOV97–1/3

IMPORTANT: Before removing main bearing caps, check for proper torque on all main bearings.

NOTE: When crankshaft is to be removed, leave front and rear main bearing caps installed until all connecting rod caps have been removed.

6. Check main bearing caps for arrows (A) cast in main bearing cap, and numbers (B) stamped on cap and oil pan rail. Arrow points toward camshaft side of engine.

   If there are no numbers, stamp corresponding numbers on cap and oil pan rail to ensure correct placement of bearing caps during reassembly.

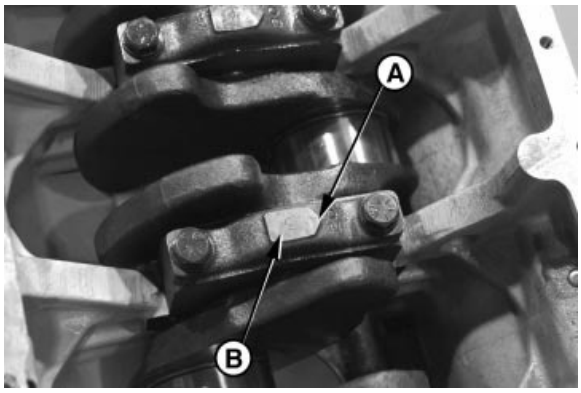

Crankshaft Main Bearing Caps

A—Cast Arrows
B—Stamped Numbers

RG,15,DT7444 –19–14NOV97–2/3

7. Remove main bearing caps by extending cap screws (C) and forcing heads of screws together. Wiggle bearing cap back and forth while applying an upward force with cap screws until free from main bearing cap support.

IMPORTANT: Keep matched bearings with their respective main bearing cap for comparison with crankshaft journal (surface wear) from which removed.

8. Visually inspect condition of bearing inserts and crankshaft main journals as bearing caps are removed.

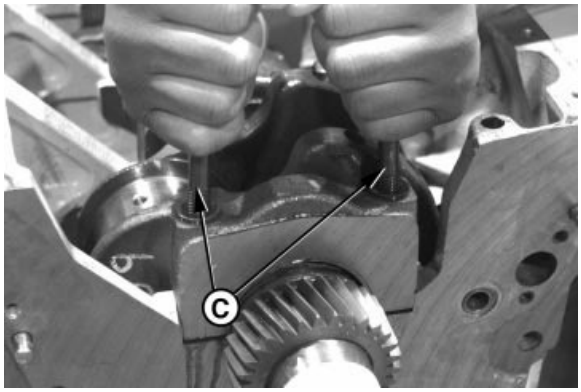

Crankshaft Main Bearing Cap Screws

C—Cap Screws

RG,15,DT7444 –19–14NOV97–3/3

Check Main Bearing Oil Clearance

NOTE: The use of PLASTIGAGE® will determine wear (crankshaft-to-bearing oil clearance) but will not determine condition of either bearing or journal surface.

1. Place a strip of PLASTIGAGE® in the center of the main bearing cap (with insert) about three-fourths of the width of the bearing or on crankshaft journal to measure oil clearance.
2. Use clean (SAE30) oil on PLASTIGAGE® to prevent smearing.
3. Install cap and tighten cap screws to 135 N•m (100 lb-ft).
4. Remove cap and compare width of PLASTIGAGE® with scale provided on wrapper to determine clearance.

Specification

Crankshaft Main Bearing-to-Journal—Oil Clearance	0.041—0.109 mm (0.0016—0.0043 in.)

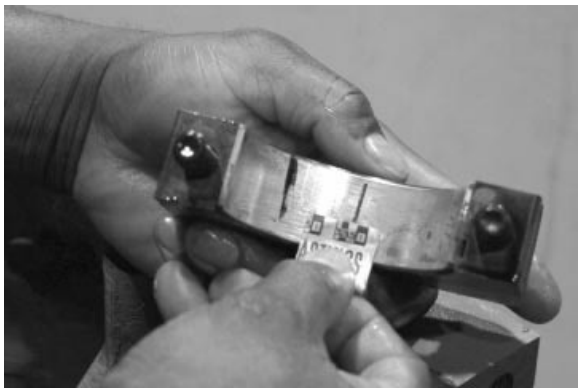

RG7528 –UN–23NOV97

Using PLASTIGAGE

PLASTIGAGE is a registered trademark of the DANA Corp.

RG,15,DT7443 –19–14NOV97–1/1

Remove and Install Crankshaft Gear (Crankshaft Installed in Engine)

NOTE: Remove crankshaft gear for replacement only; it is not necessary to remove gear for crankshaft removal.

Remove Crankshaft Gear

1. Lock engine at No. 1 TDC compression.
2. Remove timing gear cover. (See REMOVE TIMING GEAR COVER in Group 050.)
3. Remove oil pump. (See REMOVE ENGINE OIL PUMP in Group 060.)
4. Remove upper idler gear and lower idler gear and shaft. (See REMOVE LOWER AND UPPER IDLER SHAFTS in Group 050.)
5. Remove front plate. (See REMOVE CYLINDER BLOCK FRONT PLATE in Group 050.)

NOTE: Tapered nose crankshafts MUST have a thread protector installed in nose before using puller to remove crankshaft gear.

6. Install No. 1123 (D01218AA) Pulling Attachment (A) or larger onto crankshaft gear.
7. Install D01200AA Push Puller (B). Remove crankshaft gear.

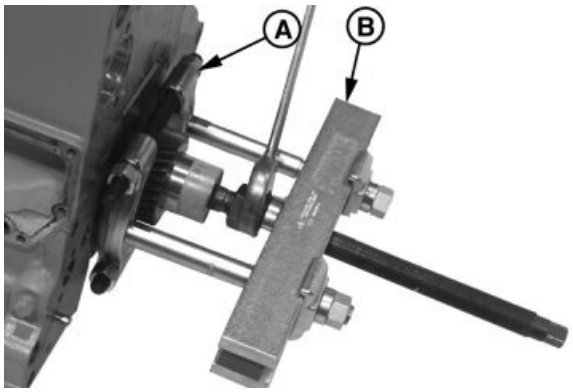

RG7529 –UN–05NOV97

Crankshaft Gear Puller

A—Pulling Attachment
B—Push Puller

Continued on next page

RG,15,DT7442 –19–01DEC03–1/2

Install Crankshaft Gear

IMPORTANT: If flame heat is used, be sure gear is heated uniformly around circumference. DO NOT OVERHEAT. SEE CAUTION. Overheating may also destroy original heat treatment of gear.

CAUTION: Oil fumes or oil can ignite above 193°C (380°F). Use a thermometer and do not exceed 182°C (360°F). Do not allow a heating element to be in direct contact with the oil. Heat the oil in a well-ventilated area. Plan a safe handling procedure to avoid burns.

1. Heat crankshaft gear to 148°C (300°F) using either heated oil or oven heat.
2. Install tool adapter (A) into nose of crankshaft until adapter seats in bottom of crankshaft. Use JDG954-2 Adapter for straight nose crankshafts or JDG954-8 for tapered nose crankshafts.

IMPORTANT: When installing gear, do not gouge or nick crankshaft flange.

NOTE: Chamfered side of gear should be installed toward engine.

3. Place gear on crankshaft flange. Be sure Woodruff key (B) on crankshaft is properly aligned with keyway in gear
4. Install JDG954-1 Installer (C) over adapter.
5. Tighten nut clockwise until gear firmly seats against crankshaft flange. Allow gear to cool before removing installer.
6. Refer to appropriate group to complete final assembly of parts removed to access crankshaft gear.

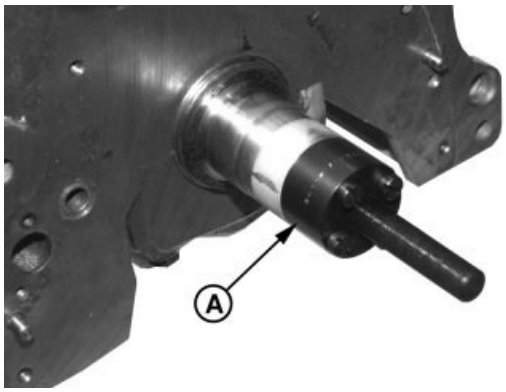

RG7533 –UN–05NOV97

Crankshaft Gear Adapter Tool

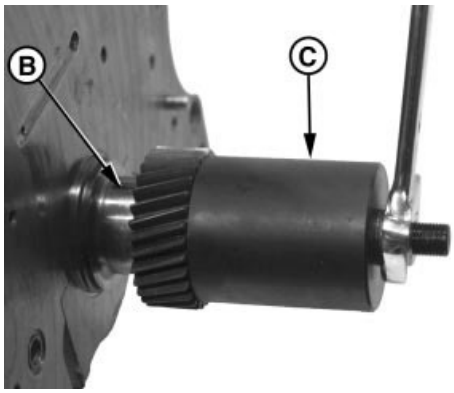

RG7534 –UN–05NOV97

Crankshaft Gear Woodruff Key/Installer Tool

A—JDG954-2 Adapter Shown
B—Woodruff Key
C—JDG954-1 Installer

RG,15,DT7442 –19–01DEC03–2/2

Remove Crankshaft

1. Remove engine front plate. (See REMOVE CYLINDER BLOCK FRONT PLATE in Group 050.)
2. Remove flywheel housing and flywheel. (See REMOVE FLYWHEEL HOUSING earlier in this group.) (See REMOVE FLYWHEEL in this group.)
3. Remove main bearing caps and connecting rod caps, as described earlier in this group.

CAUTION: Crankshaft is very heavy. Plan a proper handling procedure to avoid injury.

4. Attach a lifting sling to crankshaft. Using proper lifting equipment, carefully raise crankshaft out of cylinder block.
5. Clean crankshaft, especially oil passages, using solvent and compressed air.
6. Place crankshaft on clean V-blocks.
7. If main bearing inserts are to be replaced, remove inserts from cylinder block. Otherwise, leave bearing inserts in block until assembled ID has been measured.

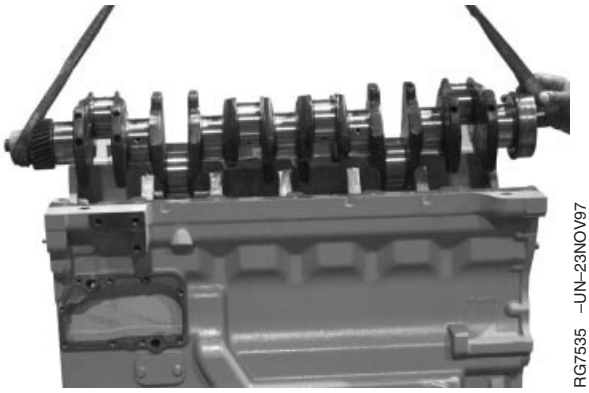

RG7535 –UN–23NOV97

Remove Crankshaft from Cylinder Block

RG,15,DT7441 –19–14NOV97–1/1

Inspect Crankshaft

NOTE: If vibration damper damage was discovered during teardown, it is recommended that the crankshaft be magna-fluxed. This will verify whether or not it has microscopic cracks or fissures. See INSPECT VIBRATION DAMPER earlier in this group.

1. Thoroughly clean crankshaft. Clear restrictions from all oil passages.

IMPORTANT: Small cracks may not be visible to the eye. Use a method such as the Fluorescent Magnetic Particle Method. This method magnetizes the crank, employing magnetic particles which are fluorescent and glow under "black light". The crankshaft must be de-magnetized after inspection.

2. Inspect crankshaft for signs of load stress, cracks, scoring, or journal scratches. Replace crankshaft if cracks are found.

3. Check each journal for evidence of excessive overheating or discoloration. If either condition exists, replace crankshaft since heat treatment has probably been destroyed.

4. Inspect front crankshaft gear for cracks, chipped teeth, or excess wear. Replace gear as required.

5. Inspect the keyway for evidence of cracks or wear. Replace crankshaft as necessary.

6. Carefully inspect the rear hub of the crankshaft in the area of the wear sleeve contact surface for evidence of a rough or grooved condition. Any imperfections in this area will result in oil leakage. Slight ridges may be cleaned up with emery cloth or crocus cloth.

7. Carefully check the crankshaft for cracks in the area of rod journal holes (A) and at journal fillets (B). Replace crankshaft if any cracks are found.

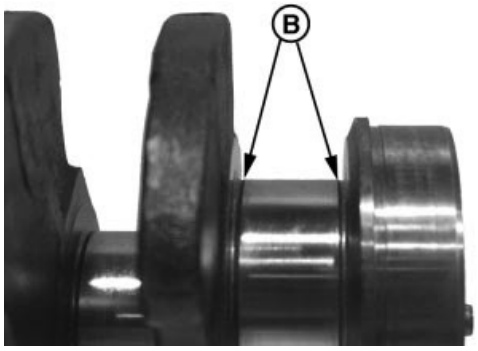

RG7536B –UN–05NOV97

Crankshaft Main Bearing Journal Fillets

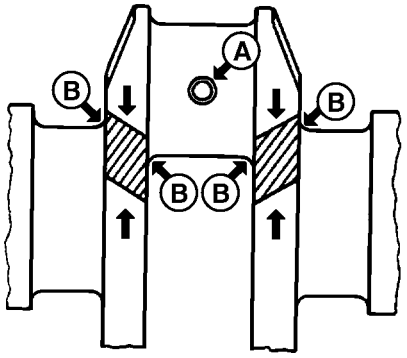

RGCD7147 –UN–30OCT97

Crankshaft Rod Bearing Journal Holes/Fillets

A—Rod Journal Hole
B—Journal Fillets

RG,15,DT7440 –19–14NOV97–1/1

Measure Crankshaft Journals and Main Bearing ID

1. With crankshaft removed from engine, assemble main bearing caps with bearing inserts. Be sure inserts are installed correctly.
2. Tighten main bearing cap screws to 135 N•m (100 lb-ft).
3. Measure and record main bearing assembled ID (A) at several points with an inside micrometer.
4. Measure and record crankshaft main journal OD (B) and rod journal OD (C) at several points around each journal.

NOTE: If an undersized crankshaft has been installed, measured dimensions will not meet specifications. However, bearing-to-journal oil clearance must be within specification. See CRANKSHAFT GRINDING GUIDELINES later in this group.

5. Compare measurements with specifications given below.

Specification	
Crankshaft Main Bearing—ID	79.391—79.433 mm (3.1256—3.1273 in.)
Crankshaft Main Journal—OD	79.324—79.350 mm (3.1229—3.1240 in.)
Crankshaft Rod Journal—OD	77.800—77.826 mm (3.0629—3.0640 in.)
Crankshaft Main Bearing-to-Journal—Oil Clearance	0.041—0.109 mm (0.0016—0.0043 in.)
Crankshaft Main or Rod Journal—Maximum Taper	0.010 mm (0.0004 in.)
Crankshaft Main or Rod Journal—Maximum Out-of-Round	0.005 mm (0.0002 in.)

Replace or recondition crankshaft if it does not fall within above specifications.

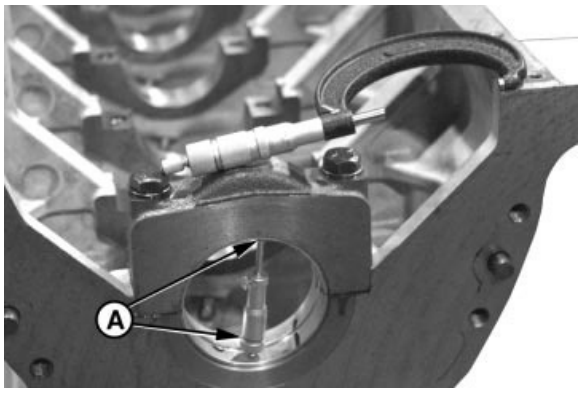

RG7648 –UN–07NOV97

Measuring Main Bearing Cap ID Assembly

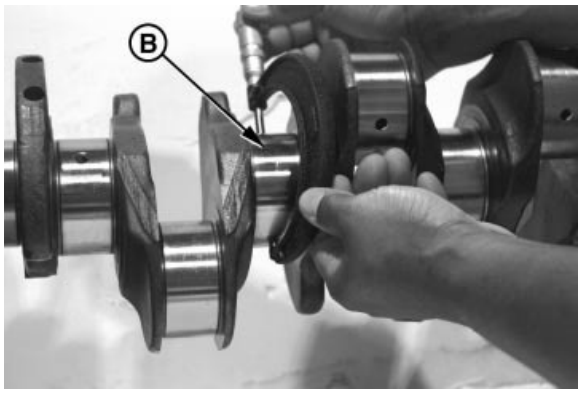

RG7538 –UN–05NOV97

Measuring Crankshaft Main Bearing Journal OD

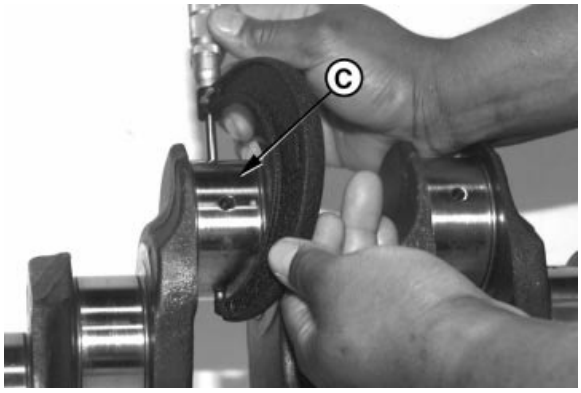

RG7539 –UN–05NOV97

Measuring Crankshaft Rod Bearing Journal OD

A—Main Bearing ID
B—Main Journal OD
C—Rod Journal OD

RG,15,DT7439 –19–14NOV97–1/1

Measure Main Thrust Journal Width and Thrust Bearing Width

NOTE: Oversized bearings were available for some early engines. If crankshaft has been previously reconditioned, thrust journal width may not be within specifications. However, oil (side) clearance must be within specification.

1. Measure and record crankshaft main thrust journal width.

   If crankshaft thrust journal width is not within specifications, install a new crankshaft.

2. Measure and record width of main thrust bearing. Oil (side) clearance between thrust bearing and thrust journal must be within specifications.

Specification

Crankshaft Main Thrust Bearing Journal (New)—Width	38.952—39.028 mm (1.5335—1.5365 in.)
Crankshaft Main Thrust Bearing—Overall Width	38.79—38.87 mm (1.527—1.530 in.)



RG7540 –UN–23NOV97

Measuring Main Thrust Journal Width



RG7541 –UN–23NOV97

Measuring Main Thrust Bearing Width



RG7542 –UN–23NOV97

Assembled Main Thrust Bearing

RG,15,DT7438 –19–28JAN04–1/1

Crankshaft Grinding Guidelines

IMPORTANT: Crankshaft grinding should be done ONLY by experienced personnel on equipment capable of maintaining crankshaft size and finish specifications. Undercut and rolled fillets (A) have taken the place of ground (tangential) fillets. DO NOT grind within this undercut area when undersize bearings are used.

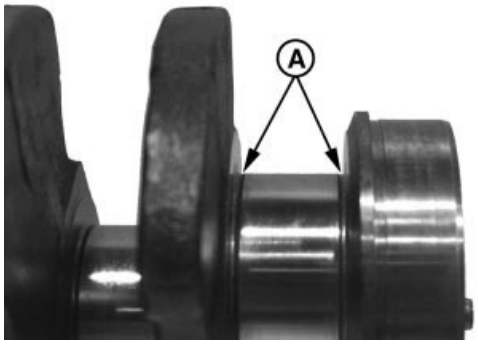

RG7536A –UN–23NOV97

Crankshaft Main Bearing Journal Fillets

Crankshafts have micro-finished journal surfaces.

IMPORTANT: If undersize bearings are installed, recheck bearing-to-journal clearance. If oil clearance is not within specifications, premature wear of bearings and journals will result.



RG7542 –UN–23NOV97

Assembled Main Thrust Bearing

If the crankshaft is to be reground, use the following recommended guidelines:

1. Compare the crankshaft journal measurements taken during inspection and determine the size which the journals are to be reground.

2. Grind all main journals or all connecting rod journals to the same required size.

IMPORTANT: Care must be taken to avoid localized heating which often produces grinding cracks. Use coolant generously to cool the crankshaft while grinding. DO NOT crowd the grinding wheel into the work. Grind crankshaft with journals turning counterclockwise, as viewed from the front end of the crankshaft. Lap or polish journals in opposite direction of grinding.

3. Polish or lap the ground surfaces to the specified finish to prevent excessive wear of the journals.

4. Stone the edge of all oil holes in the journal surfaces smooth to provide a radius of approximately 1.50 mm (0.060 in.).

A—Fillets

Continued on next page

RG,15,DT7437 –19–20DEC99–1/2

5. When finished grinding, inspect the crankshaft by the fluorescent magnetic particle method, or other similar method to determine if cracks have originated due to the grinding operation.

6. De-magnetize the crankshaft after inspection.

7. Thoroughly clean the crankshaft and oil passages with solvent. Dry with compressed air.

RG,15,DT7437 –19–20DEC99–2/2

Crankshaft Grinding Specifications

Bearing Size	Crankshaft Main Journal OD	Crankshaft Rod Journal OD
Standard	79.324—79.350 mm (3.1229—3.1240 in.)	77.800—77.826 mm (3.0629—3.0640 in.)
0.25 mm (0.010 in.) Undersize	79.074—79.100 mm (3.1131—3.1141 in.)	77.550—77.576 mm (3.0531—3.0541 in.)
Main and Connecting Rod Journal Surface Finish (AA)	Lap 0.20 [micro]m (8 AA)	
Thrust Surface Finish (AA)	Lap 0.40 [micro]m (16 AA)	
Thrust Bearing Journal Width	38.952—39.028 mm (1.5335—1.5365 in.)	
Direction of Crankshaft Rotation (viewed from flywheel end):		
Grinding	Clockwise	
Lapping	Counterclockwise	
Engine Stroke	127 mm (5.00 in.)	
Main Journal Maximum Runout (Concentricity) Relative to No. 1 and No.7 (6.8 L) or No. 1 and No. 5 (4.5 L) Journals	0.05 mm (0.0019 in.)	
Main Journal Maximum Runout (Concentricity) Between Adjacent Journals	0.025 mm (0.0009 in.)	

RG,15,DT7435 –19–14NOV97–1/1

Measure Assembled ID of Main Bearing Caps

1. Remove bearing inserts from caps and cylinder block. Keep inserts in correct order if they are to be reused.
2. Clean and inspect caps for damage. Small burrs or nicks on flat surfaces may be removed with a file. Use a medium-grit polishing cloth to dress curved bearing surfaces.
3. Install bearing caps (without bearings) in cylinder block. Tighten cap screws to 135 N•m (100 lb-ft).
4. Measure ID of bearing cap bores.

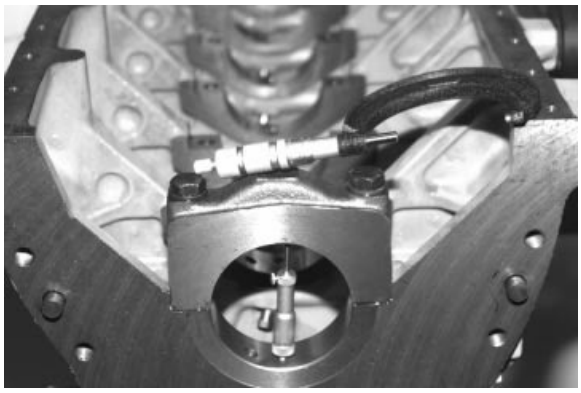
RG7537 –UN–23NOV97

Measuring Assembled Main Bearing Cap ID

Specification	
Crankshaft Main Bearing Bore (Without Bearings)—ID	84.455—84.481 mm (3.3250—3.3260 in.)
Crankshaft Main Bearing Bore Centerline-to-Top Deck—Distance	337.896—337.972 mm (13.3029—13.3059 in.)

IMPORTANT: When cylinder block is line bored, dimension (A) from centerline of main bearing bore to cylinder block top deck will be changed. Piston may contact cylinder head if this dimension is less than specified above. Main bearing line boring should be done ONLY by experienced personnel on equipment capable of maintaining bore specifications.

Service bearing caps are not available for more recent cylinder blocks as listed below:

CYLINDER BLOCK	PART NUMBER
Non-Structural 4 Cylinder	R504849
Structural 4 Cylinder	R516309
Non-Structural 6 Cylinder	R504850
Structural 6 Cylinder	R516310

5. If bearing caps are damaged or bore is not within specification, install a new cap and line bore to specified size. (See MEASURE CRANKSHAFT JOURNALS AND MAIN BEARING ID, earlier in this group.)

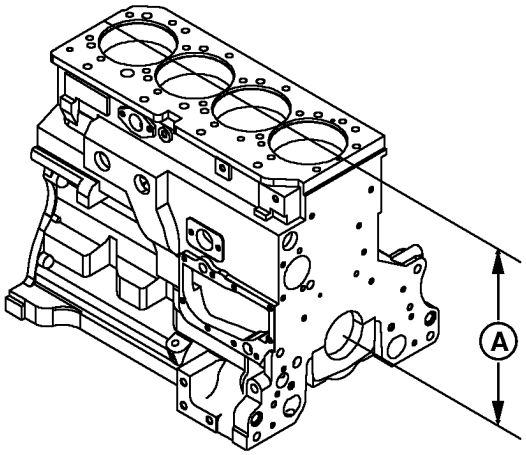

RG7405 –UN–03NOV97

Cylinder Block to Crankshaft Centerline

A—Top Deck-to-Centerline Bearing Bore

Continued on next page

NOTE: Replacement bearing caps are supplied with unfinished bearing bore.

RG,15,DT7436 –19–23JAN04–2/2

02
040
52

Install Main and Thrust Bearing Inserts in Block

NOTE: Lower half of bearing insert with oil hole goes in block.

1. Install main bearing inserts. Make sure that tang (A) in insert is engaged with slot (B) in the cylinder block and main bearing caps. Also make sure oil holes in insert (C) line up with oil passages in block (D).

A—Tang in Insert
B—Slot in Block
C—Oil Holes in Insert
D—Oil Passages in Block

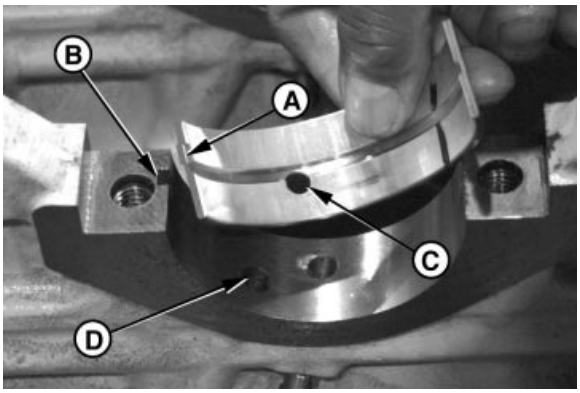

RG7544 –UN–05NOV97

Main and Thrust Bearing Insert

RG,15,DT7433 –19–14NOV97–1/3

NOTE: Only two-piece bearings (A) are provided for service.

During assembly, apply a liberal coating of clean engine oil to:

- *All main bearing webs in block*
- *Both sides of main bearing inserts and thrust bearing inserts*
- *Entire OD of crankshaft main bearing journal*

A—Two-Piece Bearing

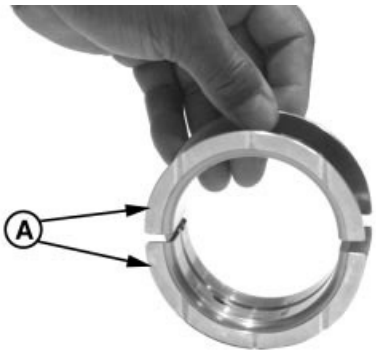

RG7542A –UN–05NOV97

Assembled Main Thrust Bearing

Continued on next page

RG,15,DT7433 –19–14NOV97–2/3

2. Install main thrust bearing (B) in thrust web of cylinder block.

B—Main Thrust Bearing

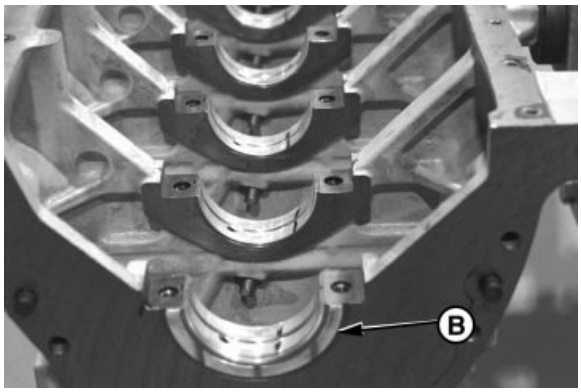

Main Thrust Bearing

RG,15,DT7433 –19–14NOV97–3/3

Install Crankshaft

CAUTION: Crankshaft is heavy. Plan a proper lifting procedure to avoid injuries.

02
040
54

1. Carefully position crankshaft onto main bearing inserts using a hoist and lift sling.

2. Apply a liberal amount of clean oil to bearing insert. Dip entire main bearing cap screws in clean engine oil and position them in main bearing caps.

IMPORTANT: Make sure main bearing caps are installed in locations from which they were removed. Numbers (B) stamped on the caps should match numbers stamped on pan rail of block. Arrow (C) on cap must point toward camshaft side of block.

3. Install main bearing caps so bearing tang (A) in cap and cylinder block are together on same side of cylinder block.

A—Bearing Tang
B—Stamped Numbers
C—Cast Arrow

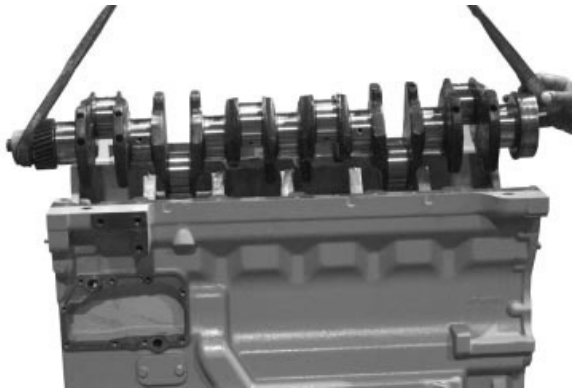
RG7535 –UN–23NOV97

Crankshaft in Cylinder Block

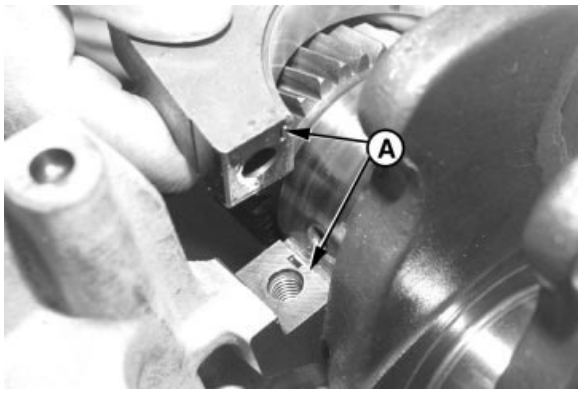

RG7547 –UN–05NOV97

Main Bearing Insert Tangs

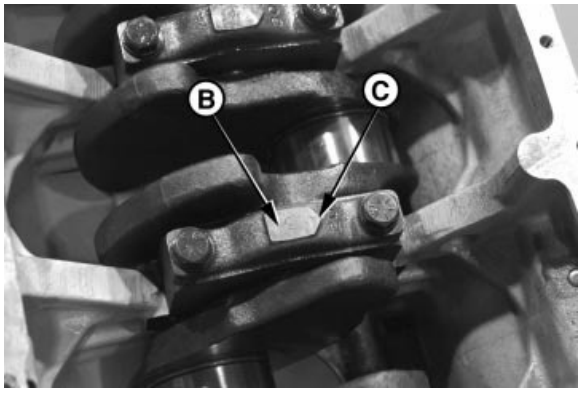

RG7525B –UN–05NOV97

Bearing Cap Location and Direction Stamp

Continued on next page
RG,15,DT7432 –19–15OCT01–1/3

IMPORTANT: Do not use pneumatic wrench to install main bearing cap screws, as damage may occur to threads.

4. Tighten all main bearing cap screws to specifications except rear main (thrust) bearing cap screws. Tighten rear main (thrust) bearing cap screws to specifications.

Specification	
Crankshaft Main Bearing Cap Screws—Torque	135 N•m (100 lb-ft)
Crankshaft Rear Main (Thrust) Bearing Cap Screw (Initial)—Torque	20 N•m (177 lb-in.)



Main Bearing Cap Screws

IMPORTANT: DO NOT pry on thrust washer when forcing crankshaft back and forth to align thrust bearings.

5. Before tightening rear main (thrust) bearing cap screws, align upper and lower thrust bearings. Carefully force crankshaft and main thrust bearing cap to rear, using a prybar between crank throw and block web. Then, force crankshaft to front to line up thrust bearing surfaces.

6. Tighten rear main (thrust) bearing cap screws to specified torque.

Specification	
Crankshaft Rear Main (Thrust) Bearing Cap Screw (Final)—Torque	135 N•m (100 lb-ft)

7. Turn crankshaft by hand. If crankshaft does not turn easily, disassemble parts and determine the cause.

Continued on next page

RG,15,DT7432 –19–15OCT01–2/3

IMPORTANT: Using pneumatic wrenches to install cap screws may cause damage to the threads. Never reuse connecting rod cap screws.

8. Install connecting rod caps and bearings. Install new cap screws and tighten to specification. (See INSTALL PISTON AND CONNECTING ROD ASSEMBLY in Group 030.)

9. Check crankshaft for specified end play.

Specification

Crankshaft—End Play ..... 0.029—0.357 mm (0.001—0.014 in.)

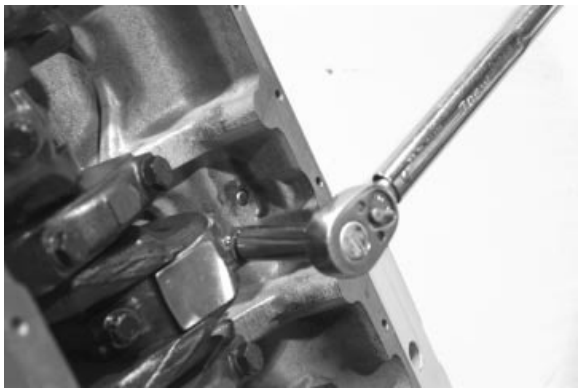

RG7549 –UN–23NOV97

Connecting Rod Bearing Cap Screws

RG,15,DT7432 –19–15OCT01–3/3

Install Flywheel Housing

1. Inspect and clean cylinder block and flywheel housing mating surfaces using a brass scraper and/or steam cleaner. Remove any previously applied sealant or gasket material.

2. Rinse well with plain water to remove all soap residue from gasket surfaces.

NOTE: Some flywheel housings may use a impregnated gasket instead of sealant. DO NOT apply sealant to gasket or mating surfaces of these housings.

If equipped, locate camshaft o-ring seal (A) in recess similar to recess shown in bottom figure.

Check parts catalog for specific engine applications.

3. Install new camshaft O-ring seal (A) (if equipped).

IMPORTANT: Surfaces to be bonded MUST BE free of oil, dirt, or cleaning agents.

4. Apply LOCTITE® 515 (PM38655) Flexible Form-In-Place Gasket in a continuous 2—4 mm (0.080—0.157 in.) bead to flywheel housing as shown.

NOTE: In middle figure for T06068TF151 engine, note that bead between No. 1 and No. 2 cap screw is centered on rib of housing and not centerline to cap screw holes.

Locate bead in the center of mating surfaces as shown and completely encircle cap screws (except No. 3) and dowel holes.

A—O-Ring

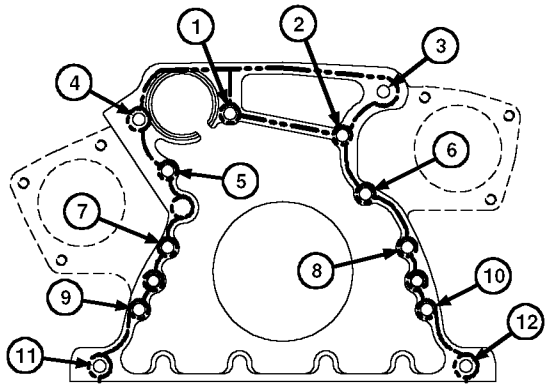

RG10544 –UN–03DEC99

Flywheel Housing

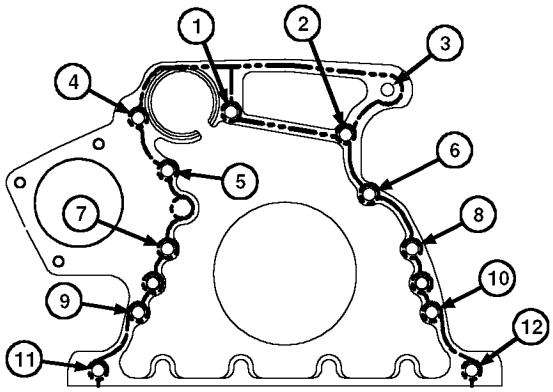

RG10545 –UN–03DEC99

Flywheel Housing (T06068TF151)

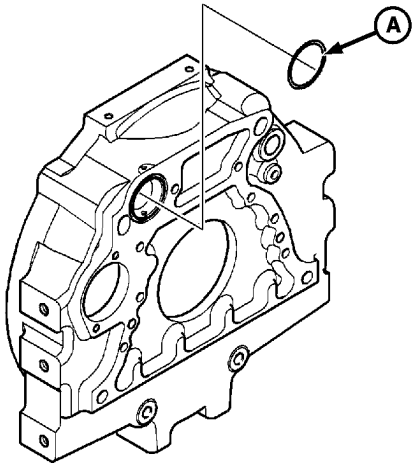

RG12413 –UN–10JUL02

LOCTITE is a registered trademark of Loctite Corp.

Continued on next page

RG,15,DT7431 –19–11JUN02–1/3

IMPORTANT: Tighten cap screws to specifications in sequence shown, within 10 minutes after parts are assembled.

Engines equipped with a dual starter flywheel housing require a matching flywheel. If replacing single starter housing with a dual, the flywheel must also be changed.

NOTE: **On 6103, 6203, 6403 and 6603 Tractors:** *Apply LOCTITE® 515 (PM38655) Flexible Form-In-Place Gasket to flywheel housing surface under head of M20 cap screw on camshaft side of engine (position No. 4 in upper figure).*

On 3210, 3310, and 3410 Tractors: *Lubricate flywheel housing cap screws with clean engine oil before assembly.*

5. Install flywheel housing on cylinder block and tighten cap screws to specifications.

Specification	
Flywheel Housing Cap Screws—Torque	125 N•m (92 lb-ft)
3210, 3310 and 3410 Tractor—Specification	
Flywheel Housing Cap Screws (1—8)—Torque	110 N•m (81 lb-ft)
Flywheel Housing Cap Screws (9 and 12)—Torque	130 N•m (96 lb-ft)
Flywheel Housing Cap Screws (13 and 14)—Torque	280 N•m (206 lb-ft)
Flywheel Housing Cap Screws (10 and 11)—Torque	530 N•m (391 lb-ft)

6. Check flywheel housing seal bore runout (concentricity). If runout exceeds specification, replace housing.

Specification	
Flywheel Housing Seal Bore—Maximum Permissible Runout (Concentricity)	0.152 mm (0.006 in.)

7. Install crankshaft rear oil seal assembly. (See INSTALL CRANKSHAFT REAR OIL SEAL AND WEAR SLEEVE earlier in this group.)

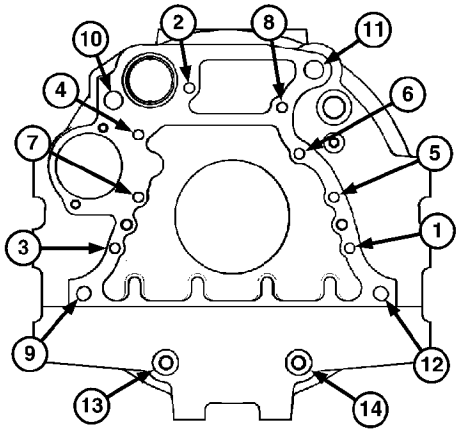

3210, 3310 and 3410 Tractor Torque Sequence

RG12371 –UN–31MAY02

LOCTITE is a registered trademark of Loctite Corp.

Continued on next page

RG,15,DT7431 –19–11JUN02–2/3

8. If torque converter access hole plug was removed, apply LOCTITE® 277 to plug and install.

NOTE: Some flywheel housings may use a sheet metal plate as part of the enclosure, install as necessary.

LOCTITE is a registered trademark of Loctite Corp.

RG,15,DT7431 –19–11JUN02–3/3

Complete Final Assembly

Use new gaskets and O-rings during final engine assembly. Clean all engine components as necessary prior to assembly.

1. Install oil bypass valve assembly in front face of block. (See REMOVE, INSPECT AND INSTALL OIL BYPASS VALVE in Group 060)
2. Install front plate. (See INSTALL CYLINDER BLOCK FRONT PLATE in Group 050.)
3. Install balancer shafts (if equipped). (See INSTALL AND TIME BALANCER SHAFTS in Group 050.)
4. Install timing gear train and camshaft. (See INSTALL CAMSHAFT in Group 050.)
5. Install oil pump assembly. (See INSTALL ENGINE OIL PUMP in Group 060.)
6. If equipped with cartridge type oil pressure regulating valve, install valve. (See REMOVE AND INSTALL OIL PRESSURE REGULATING VALVE in Group 060.)
7. Install timing gear cover gasket and timing gear cover. (See INSTALL TIMING GEAR COVER in Group 050.)
8. If equipped with spring, plunger and seat type oil pressure regulating valve, install valve assembly. (See REMOVE AND INSTALL OIL PRESSURE REGULATING VALVE in Group 060.)
9. Install front oil seal. (See REPLACE FRONT CRANKSHAFT OIL SEAL AND WEAR SLEEVE in this group.)
10. Install oil pan. (See INSTALL OIL PAN in Group 060.)
11. Install crankshaft pulley, or vibration damper. (See INSTALL PULLEY OR VIBRATION DAMPER AND PULLEY in this group.)
12. Install push rods, and rocker arm assembly. (See INSTALL ROCKER ARM ASSEMBLY in Group 020.)
13. Install fuel supply pump. See Section 02, Group 090 of CTM207 (Mechanical Fuel Systems), CTM170 (Level 4 Electronic Fuel Systems), CTM331 (Level 12 Electronic Fuel Systems), CTM284 (Level 1 Electronic Fuel Systems) or CTM220 (Level 11 Electronic Fuel Systems with Denso High Pressure Common Rail).
14. Install injection pump. See Section 02, Group 090 of CTM207 (Mechanical Fuel Systems), CTM170 (Level 4 Electronic Fuel Systems), CTM331 (Level 12 Electronic Fuel Systems), CTM284 (Level 1 Electronic Fuel Systems) or CTM220 (Level 11 Electronic Fuel Systems with Denso High Pressure Common Rail).
15. Install starter motor. (See REMOVE AND INSTALL STARTER in Group 100.)
16. Adjust valve clearance. (See CHECK AND ADJUST VALVE CLEARANCE in Group 020 for two-valve head engines or CHECK AND ADJUST VALVE CLEARANCE in Group 21 for four-valve head engines.)
17. Install and adjust poly-vee belts. (See Group 070.)
18. Fill engine with clean oil and proper coolant. (See Section 01, Group 002)
19. Perform engine break-in. (See PERFORM ENGINE BREAK-IN in Group 010.)

RG,15,DT7430 –19–19JUN02–1/1

Measure Valve Lift

IMPORTANT: For a more accurate measurement, measure valve lift at 0.00 mm (0.00 in.) rocker arm-to-valve tip clearance.

NOTE: Measuring valve lift provides an indication of wear on camshaft lobes and camshaft followers or push rods.

1. Remove heat shield if required.
2. Remove rocker arm cover.
3. Using JDE81-1 or JDE83 Flywheel Turning Tool and JDG1571 or JDE81-4 Timing Pin inserted in flywheel, lock No. 1 piston at TDC compression stroke.

   See CHECK AND ADJUST VALVE CLEARANCE in Group 020 for engine valve locations.
4. Set rocker arm-to-valve tip clearance to 0.00 mm (0.00 in.) for:
   - No. 1 and 3 exhaust and No. 1 and 2 intake valves on 4-cylinder engines.
   - No. 1, 3, and 5 exhaust and No. 1, 2, and 4 intake valves on 6-cylinder engines.
5. **On Two-Valve Head Engine:** place dial indicator tip on top of valve rotator as shown. Preload indicator tip and set dial at 0.0 mm (0.00 in.).
6. **On Four-Valve Head Engine:** place dial indicator tip on top of valve bridge as shown. Preload indicator tip and set dial at 0.0 mm (0.00 in.).
7. Remove timing pin from flywheel and manually rotate engine one full revolution (360°) in running direction.
8. Observe dial indicator reading as valve is moved to full open. Record maximum reading and compare with specifications.

Two-Valve Head Engines—Specification

Intake Valves—Valve Lift [at 0.00 mm (0.00 in.) Valve Clearance]	11.77—12.21 mm (0.463—0.481 in.)
Wear Limit	11.34 mm (0.447 in.)

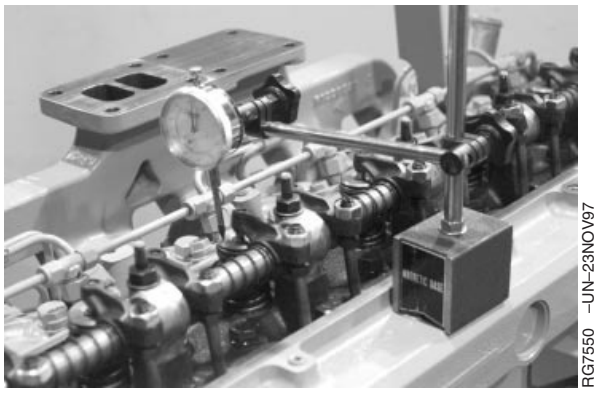

Two-Valve Head Engine Shown

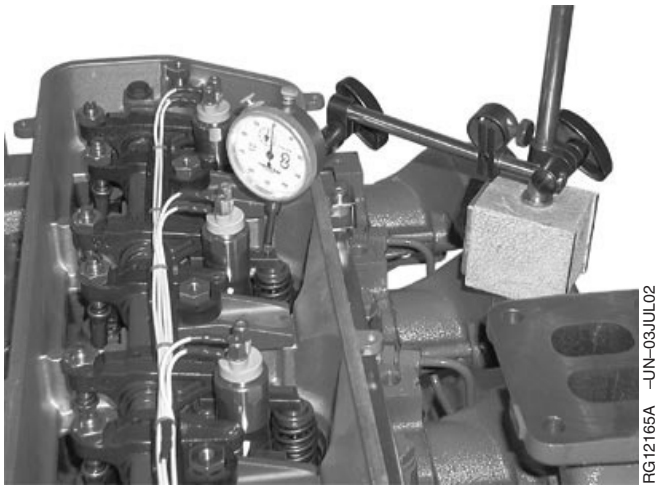

Four-Valve Head Engine Shown

Continued on next page

RG,16,DT7507 –19–23MAY02–1/2

Exhaust Valves—Valve Lift [at 0.00 mm (0.00 in.) Valve Clearance] ..... 11.51—11.94 mm (0.453—0.470 in.)
Wear Limit ..... 11.08 mm (0.436 in.)

Four-Valve Head Engines—Specification

Intake Valves—Valve Lift [at 0.00 mm (0.00 in.) Valve Clearance] ..... 9.03—9.43 mm (0.356—0.371 in.)
Wear Limit ..... 8.7 mm (0.343 in.)
Exhaust Valves—Valve Lift [at 0.00 mm (0.00 in.) Valve Clearance] ..... 9.32—9.72 mm (0.367—0.383 in.)
Wear Limit ..... 9.00 mm (0.354 in.)

9. If valve lift on all valves is within specifications, adjust valve lash to specified clearance. (See CHECK AND ADJUST VALVE CLEARANCE in Group 020.)

   If valve lift on one or more valves is not within specification, remove and inspect entire valve train and camshaft.

10. Rotate engine one full revolution (360°). Lock engine at:

    - TDC No. 4 compression stroke for 4-cylinder engines.
    - TDC No. 6 compression stroke for 6-cylinder engines.

11. Set rocker arm-to-valve tip clearance to 0.0 mm (0.00 in.) for:

    - No. 2 and 4 exhaust and No. 3 and 4 intake valves on 4-cylinder engines.
    - No. 2, 4, and 6 exhaust and No. 3, 5, and 6 intake valves on 6-cylinder engines.

12. Repeat steps 4—7.

RG,16,DT7507 –19–23MAY02–2/2

Remove Timing Gear Cover

NOTE: It is not necessary to remove belt tensioner (two-valve head engines and some four-valve head engines), water pump pulley or water pump when removing timing gear cover.

IMPORTANT: Whenever the aluminum timing gear cover or water pump are replaced, the cooling system should be flushed and serviced. See FLUSH AND SERVICE COOLING SYSTEM in Section 01, Group 002. Ensure system, including radiator, is completely drained.

1. Drain oil from engine crankcase.
2. Remove fan.
3. Remove oil pan.
4. Remove oil cooler-to-water manifold elbow (A) at front plate.
5. Release fan belt tensioner (B) and remove fan belt (C).
6. **On Four-Valve Head Engines:** If needed remove fan belt tensioner and bracket as an assembly.
7. Remove alternator (D) and alternator mounting bracket. (See REMOVE AND INSTALL ALTERNATOR in Group 100.)
8. On non-auxiliary drive engines, remove tensioner bracket.
9. Remove water pump (E), if desired. (See REMOVE WATER PUMP in Group 070.)
10. Remove fan pulley (F).
11. Remove crankshaft pulley or damper (G). (See REMOVE PULLEY OR VIBRATION DAMPER AND PULLEY in Group 040.)
12. Remove unitized front oil seal/wear sleeve, if equipped. (See REPLACE FRONT CRANKSHAFT OIL SEAL AND WEAR SLEEVE in Group 040.)

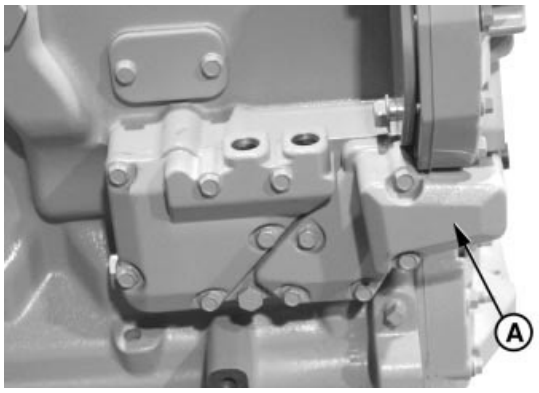

Oil Cooler-to-Water Manifold Elbow (Two-Valve Head Engine Shown)

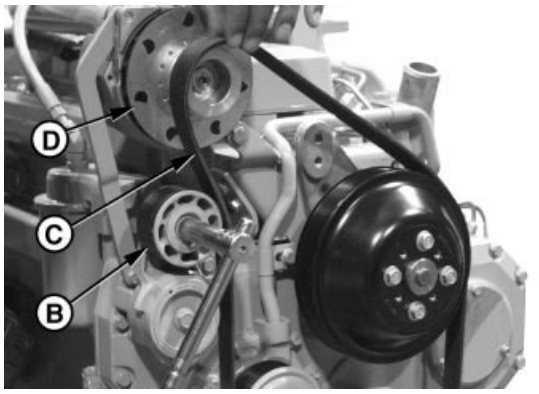

Fan Belt, Tensioner and Alternator (Two-Valve Head Engine Shown)

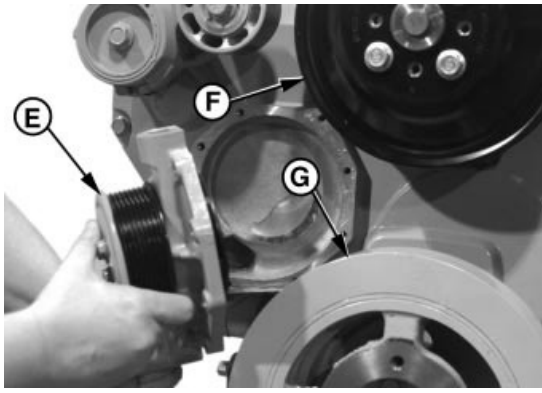

Water Pump, Fan and Crankshaft Pulley (Two-Valve Head Engine Shown)

A—Oil Cooler-to-Water Manifold Elbow
B—Fan Belt Tensioner
C—Fan Belt
D—Alternator
E—Water Pump
F—Fan Pulley
G—Crankshaft Pulley or Damper

Continued on next page

13. Remove adjustable fan drive assembly (A). (See REMOVE AND INSPECT FAN DRIVE ASSEMBLY in Group 070.)

A—Adjustable Fan Drive

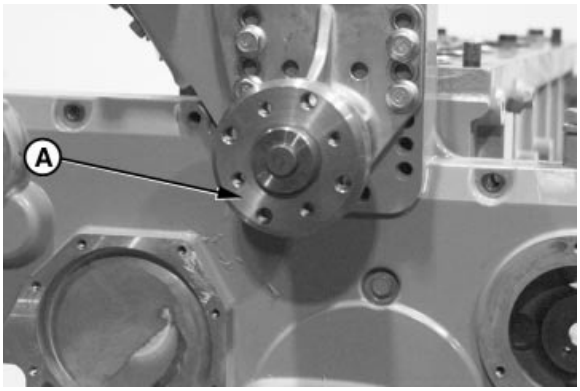

Adjustable Fan Drive Assembly (Two-Valve Head Engine Shown)

RG,16,DT7506 –19–20NOV03–2/4

14. **On Two-Valve Head Engines:** unscrew oil pressure regulating valve plug, if required. Remove spring and valve. (See REMOVE AND INSTALL OIL PRESSURE REGULATING VALVE in Group 060.)

15. Remove auxiliary drive cover and gears, if equipped, as described later in this group. (See REMOVE AND INSTALL CAMSHAFT GEAR-DRIVEN AUXILIARY DRIVE later in this group.)



Remove Oil Pressure Regulating Valve Plug (Early Two-Valve Head Engines Only)

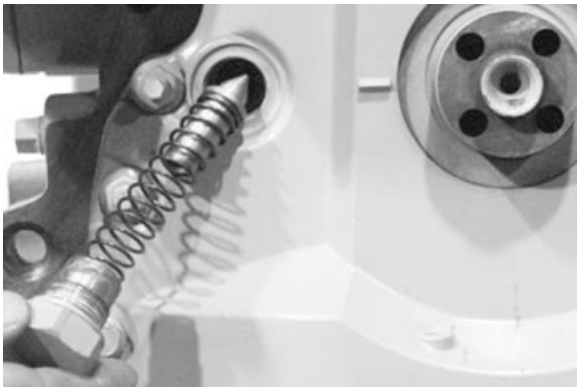

Oil Pressure Regulating Valve (Early Two-Valve Head Engines Only)

Continued on next page

RG,16,DT7506 –19–20NOV03–3/4

NOTE: Mark and identify location of timing gear cover hardware before removal to aid in reassembly.

16. **On Later, Two-Valve Head Engines:**[1] remove timing gear cover-to-cylinder block stud nuts and washers (A).

17. **On All Engines:** remove timing gear cover-to-cylinder block stud nuts and washers or flange nuts (D).

18. **On Two-Valve Head Engines:** remove cap screws (B).

19. Remove cap screws (C) bordering timing cover and cap screw (E) on back of engine front plate. Remove cover.

20. Remove two piece oil seal/wear sleeve, if equipped. (See REPLACE FRONT CRANKSHAFT OIL SEAL AND WEAR SLEEVE in Group 040.)

A—Stud Nuts and Washers
B—Cap Screws
C—Cap Screws
D—Stud Nuts and Washers or Flange Nuts (9 used)
E—Cap Screw (Behind Engine Front Plate)

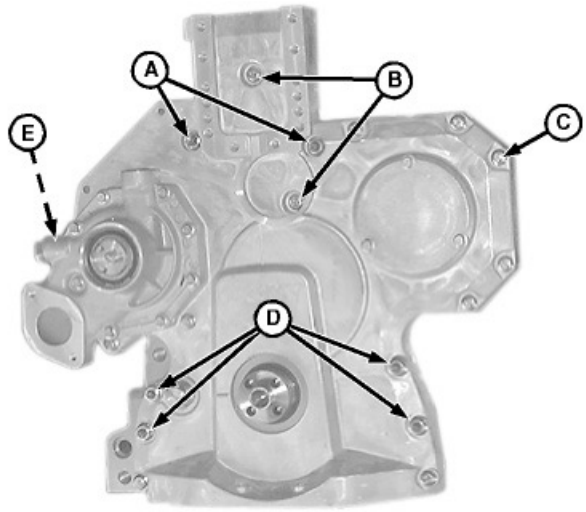

RG9105 –UN–01APR98

Two-Valve Head Engine Shown

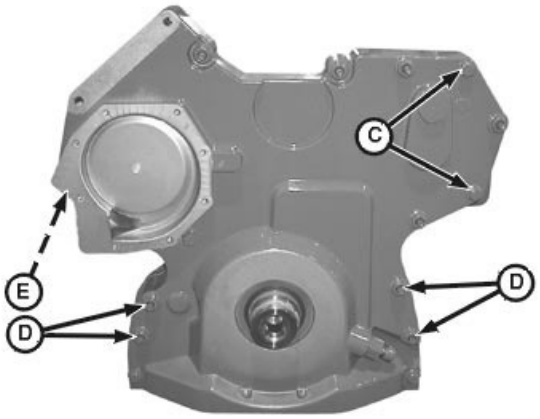

RG12353A –UN–03JUL02

Four-Valve Head Engine Shown

[1]Serial Numbers: Dubuque-built engines (703905—), Saran-built engines (516218—), Torreon-built engines (001000—).

RG,16,DT7506 –19–20NOV03–4/4

Remove and Install Camshaft Bushing with Front Plate Installed

NOTE: A camshaft bushing is installed in front (No. 1) camshaft bore only. The front plate has a chamfered edge allowing camshaft bushing removal and installation with the front plate installed.

Remove Camshaft Bushing

1. Set engine at No. 1 TDC compression.
2. On turbocharged engines, disconnect the turbocharger oil inlet line. (See DISCONNECT TURBOCHARGER OIL INLET LINE in Group 010.)
3. Remove timing gear cover, as described earlier in this group. (See REMOVE TIMING GEAR COVER in this group.)
4. Remove rocker arm cover and rocker arm assembly. (See REMOVE CYLINDER HEAD in Group 020 or 021.)
5. Remove push rods and identify location for reinstallation.
6. On engines with camshaft driven fuel supply pump, see REMOVE FUEL SUPPLY PUMP in Section 02, Group 090 of CTM207 (Mechanical Fuel Systems), REMOVE FUEL SUPPLY PUMP in Section 02, Group 090 of CTM331 (Level 12 Electronic Fuel Systems with Stanadyne DE10 Pump), or REMOVE MECHANICAL FUEL TRANSFER PUMP in Section 02, Group 090 of CTM220 (Level 11 Electronic Fuel Systems with Denso High Pressure Common Rail).

Continued on next page

7. Revolve engine to an angle where camshaft followers fall away from camshaft or use D15001NU Magnetic Follower Holder Kit (A) to hold followers.

A—Magnetic Follower Holder Kit

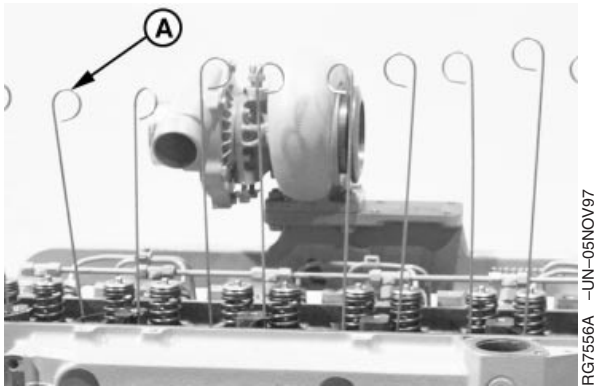

Camshaft Follower Holder Kit

Continued on next page

RG,16,DT7505 –19–17OCT01–2/4

8. Remove camshaft. (See REMOVE CAMSHAFT later in this group.)

IMPORTANT: Engine MUST remain in a position where camshaft followers rest against cylinder head or are held in up position by magnetic holders so that followers do not fall into engine crankcase. If camshaft followers fall into crankcase, cylinder head removal will be required.

9. Remove countersunk TORX® cap screw (A). Install JDG739-7 (M8 x 1.25) tapered bottom leg (B) from JDG739B Camshaft Bushing Service Kit into hole that has chamfered screw and star washer.

IMPORTANT: Block must be replaced if camshaft bore is damaged. Be careful when removing or installing bushing.

10. Install JDG739-8 (M8 x 1.25) flat bottom legs and JDG739-3 Removing/Installing Plate (C) to cylinder block so plate is parallel with front plate and centered over camshaft bore. Tighten legs and hex nuts securely.

IMPORTANT: Cylinder block bore may be damaged if puller is not properly piloted in bushing. Be sure puller is properly piloted before pulling bushing.

11. Insert JDG739-1 Bushing Remover into camshaft bore so puller pilots in bushing ID and JDG739-4 Bushing Installer Screw (D) extends through plate.

12. Install thrust washer and hex nut. Tighten hex nut until bushing is free of block bore. Remove puller and discard bushing.

13. Clean and inspect bore in cylinder block. If bore is damaged, replace cylinder block.

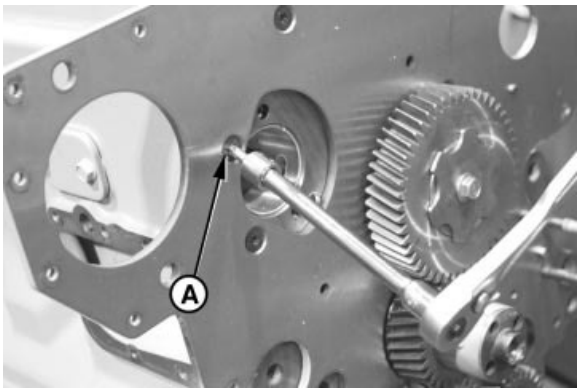

Front Plate on Cylinder Block

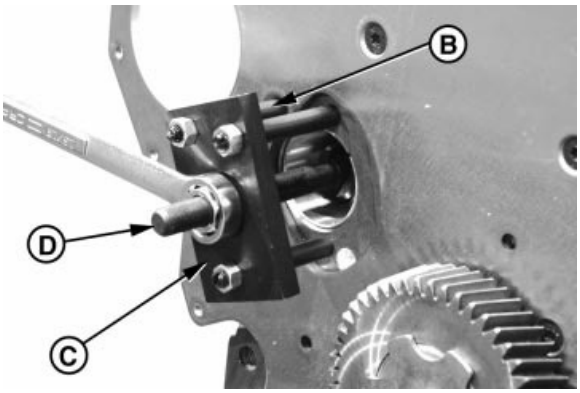

Camshaft Bushing Removal Tool

A—Cap Screw
B—JDG739-7 Tapered Bottom Leg (8 mm)
C—JDG739-3 Removing/Installing Plate
D—JDG739-4 Bushing Installer Screw

TORX is a registered trademark of Camcar/Textron.

Continued on next page

RG,16,DT7505 –19–17OCT01–3/4

Install Camshaft Bushing

IMPORTANT: Bushings must be installed so oil supply hole in bushing aligns with oil drilling in block bore.

1. Mark orientation of oil supply hole (C) on front face of block and on bushing to help with bushing alignment during installation.

2. Apply TY6333 High-Temperature Grease to ID and OD of new bushing (A), and to ID of bushing bore. Slide bushing onto JDG739-5B Bushing Installer (B) so notched end of bushing will be toward front end of engine when installed.

3. Thread JDG739-4 Bushing Installer Screw into JDG739-3 Removing/Installing Plate. With bushing started, square in bore and oil hole aligned, tighten forcing screw until flange of bushing driver bottoms against face of block.

4. Remove bushing tool from cylinder block and check oil supply hole for correct alignment. If holes are not aligned, remove and discard bushing. Install a new bushing.

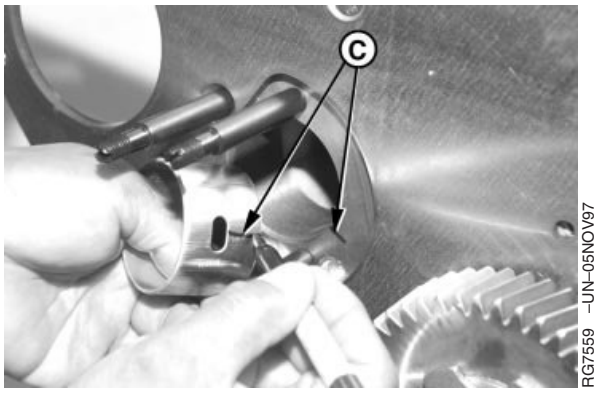

Camshaft Bushing Oil Hole Alignment

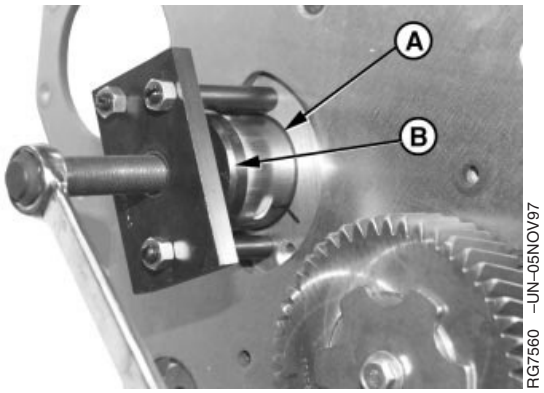

Camshaft Bushing Installation Tool

A—Bushing
B—JDG739-5B Bushing Installer
C—Oil Supply Hole

RG,16,DT7505 –19–17OCT01–4/4

Remove and Install Camshaft Gear-Driven Auxiliary Drive

02
050
10

NOTE: Various auxiliary drive options are available; removal and installation of all options are similar. The auxiliary drive is integrated into the engine front timing gear cover.

1. Remove lube line.
2. Remove auxiliary drive gear cover (A).
3. Clean and inspect cover for cracks or damage.
4. Remove auxiliary drive assembly (B).

NOTE: Auxiliary drive assembly is repairable. Refer to CTM67, OEM Accessories, for additional service information.

5. Inspect for cracked housing, worn or damaged bearings, damaged gear or spline.
6. Repair or replace auxiliary drive assembly as needed.

NOTE: Ensure that slot in gasket is aligned with oil drain (C) in auxiliary drive cavity.

7. Install gasket on auxiliary drive assembly and position in the cylinder block plate. Install cap screws and tighten to specifications.

Specification	
Auxiliary Drive-to-Cylinder Block Plate—Torque	95 N•m (70 lb-ft)

8. Install cover and tighten cap screws or nuts to specifications.

Specification	
Auxiliary Drive Cover Plate—Torque	55 N•m (41 lb-ft)

9. Install lube line.

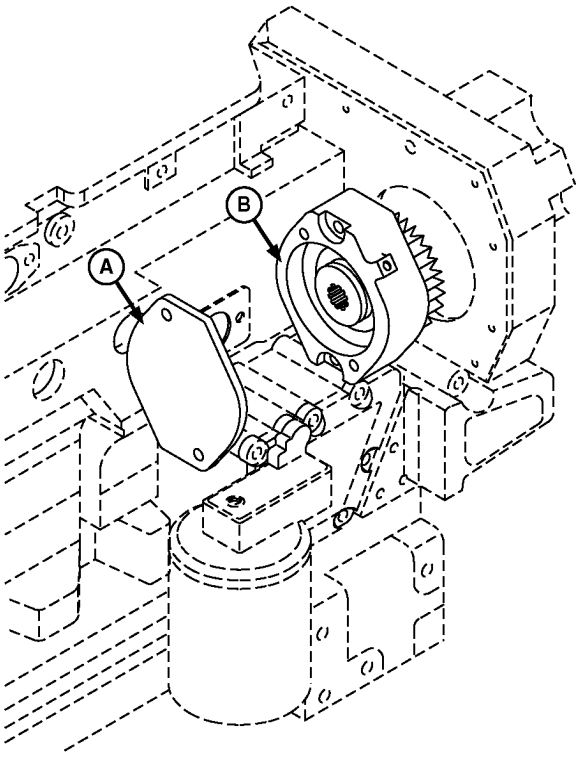

RG9049 –UN–16MAR98

Auxiliary Drive

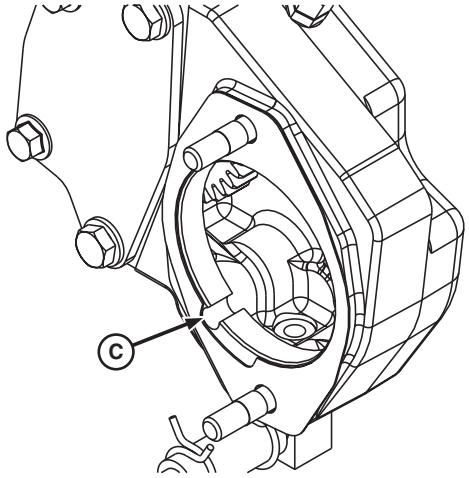

RG12431 –UN–02DEC03

A—Gear Cover
B—Auxiliary Drive Assembly
C—Oil Drain

RG,16,DT7504 –19–20NOV03–1/1

Measure Camshaft End Play

Measure camshaft end play.

Specification

Camshaft—End Play ..... 0.08—0.23 mm (0.003—0.009 in.)

If end play is excessive, check thrust plate thickness with camshaft removed. (See MEASURE CAMSHAFT THRUST PLATE CLEARANCE AND THICKNESS, later in this group.)



Measuring Camshaft End Play

RG,16,DT7503 –19–14NOV97–1/1

Measure Balancer Shaft End Play (If Equipped—4-Cylinder Engines)

Measure balancer shaft end play.

Specification

Balancer Shaft—End Play..... 0.05—0.26 mm (0.002—0.010 in.)

If balancer shaft end play exceeds specifications, check thrust plate thickness. (See INSPECT BALANCER SHAFT GEARS AND THRUST PLATES, later in this group.)



Measuring Balancer Shaft End Play—4-Cylinder

RG,16,DT7502 –19–14NOV97–1/1

Measure Idler Gear End Play

Check end play of upper and lower idler gears.

02
050
12

Specification

Upper Idler Gear—End Play	0.070—0.170 mm (0.0027—0.0066 in.)
Lower Idler Gear—End Play	0.070—0.330 mm (0.0027—0.0129 in.)

If idler gear end play does not meet specifications, check idler gear, idler shaft, and thrust washer for wear. (See MEASURE IDLER GEAR BUSHING AND SHAFT later in this group.)

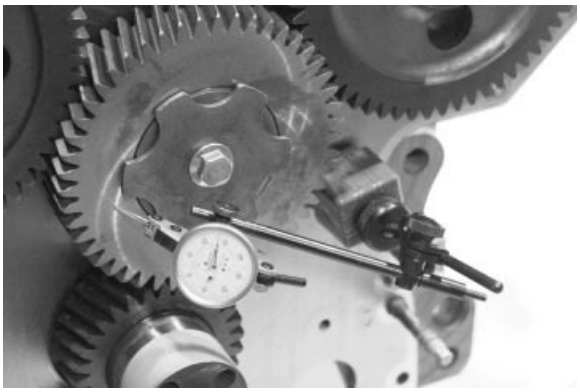

Measuring Idler Gear End Play

RG,16,DT7501 –19–14NOV97–1/1

Measure Timing Gear Backlash

NOTE: All gears have helical cut teeth.

Measure timing gear backlash. Compare against the following specifications.

Timing Gear Backlash Specifications—Specification

Camshaft-to-Upper Idler (A)
(Two-Valve Head Engine with
Gear Identified as R120635)—
Backlash ..... 0.04—0.2 mm
(0.0015—0.008 in.)

Camshaft-to-Upper Idler (A)
(Two-Valve Head Engine with
Gear Identified as R505121)—
Backlash ..... 0.04 mm
(0.0015 in.) Minimum

Camshaft-to-Upper Idler (A)
(Four-Valve Head Engine)—
Backlash ..... 0.03—0.64 mm
(0.0011—0.0254 in.)

Injection Pump-to-Upper Idler (B)
(Two-Valve Head Engine with
Gear Identified as R120635)—
Backlash ..... 0.04—0.2 mm
(0.0015—0.008 in.)

Injection Pump-to-Upper Idler (B)
(Two-Valve Head Engine with
Gear Identified as R505121)—
Backlash ..... 0.04 mm
(0.0015 in.) Minimum

Injection Pump-to-Upper Idler (B)
(Four-Valve Head Engine)—
Backlash ..... 0.09—0.55 mm
(0.0034—0.0218 in.)

Upper Idler-to-Crankshaft (C)
(Two-Valve Head Engine with
Gear Identified as R120635)—
Backlash ..... 0.04—0.2 mm
(0.0015—0.008 in.)

Upper Idler-to-Crankshaft (C)
(Two-Valve Head Engine with
Gear Identified as R505121)—
Backlash ..... 0.04 mm
(0.0015 in.) Minimum

Upper Idler-to-Crankshaft (C)
(Four-Valve Head Engine)—
Backlash ..... 0.09—0.55 mm
(0.0034—0.0218 in.)

Crankshaft-to-Lower Idler (D)—
Backlash ..... 0.07—0.60 mm
(0.0027—0.0236 in.)

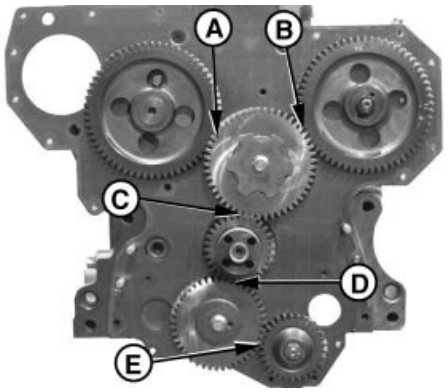

RG7530 –UN–05NOV97

6-Cylinder Engine (Two-Valve Head Engine Shown)

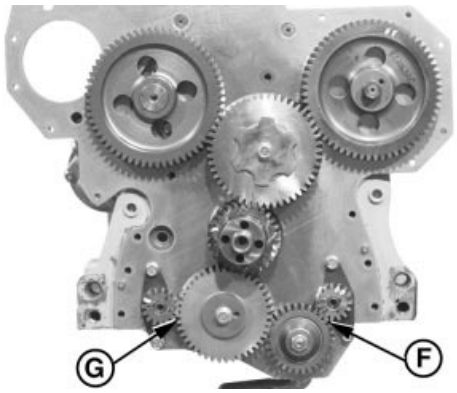

RG7703B –UN–07NOV97

4-Cylinder Engine (Two-Valve Head Engine Shown)

A—Camshaft Gear-to-Upper Idler Gear
B—Injection Pump Gear-to-Upper Idler Gear
C—Upper Idler Gear-to-Crankshaft Gear
D—Crankshaft Gear-to-Lower Idler Gear
E—Oil Pump Gear-to-Lower Idler Gear
F—Balancer Shaft Gear-to-Oil Pump Gear
G—Lower Idler Gear-to-Balancer Shaft Gear

Continued on next page

RG,16,DT7500 –19–24NOV03–1/2

Oil Pump-to-Lower Idler (E)—
Backlash ..... 0.08—0.60 mm
(0.0031—0.0236 in.)
Balancer Shaft-to-Oil Pump
(4-Cyl. Only) (F)—Backlash ..... 0.06—0.65 mm
(0.0025—0.0255 in.)
Lower Idler-to-Balancer Shaft
(4-Cyl. Only) (G)—Backlash..... 0.07—0.65 mm
(0.0027—0.0255 in.)
Camshaft-to-Auxiliary Drive (Not
Shown)—Backlash ..... 0.05—0.68 mm
(0.0021—0.0266 in.)

RG,16,DT7500 –19–24NOV03–2/2

Remove Camshaft

NOTE: It is not necessary to remove cylinder head from engine for camshaft removal. If push rods are bent or show excessive scuffing, it may be necessary to remove cylinder head for inspection of block, head and camshaft followers. (See REMOVE CYLINDER HEAD in Group 020 or 021.)

New service camshafts have fixed gears. Camshaft and gear are replaced as an assembly.

1. Drain engine oil and coolant, if not previously done.
2. Measure valve lift. (See MEASURE VALVE LIFT, earlier in this group).
3. Remove rocker arm assembly and push rods. (See REMOVE CYLINDER HEAD in Group 020.)
4. Remove timing gear cover. (See REMOVE TIMING GEAR COVER, earlier in this group.)

Continued on next page

RG,16,DT7499 –19–17OCT01–1/5

5. Remove cap screws (A) and camshaft activated fuel supply pump. See REMOVE FUEL SUPPLY PUMP in Section 02, Group 090 of CTM207 (Mechanical Fuel Systems), REMOVE FUEL SUPPLY PUMP in Section 02, Group 090 of CTM331 (Level 12 Electronic Fuel Systems with Stanadyne DE10 Pump) or REMOVE MECHANICAL FUEL TRANSFER PUMP in Section 02, Group 090 of CTM220 (Level 11 Electronic Fuel Systems with Denso High Pressure Common Rail).

A—Cap Screws

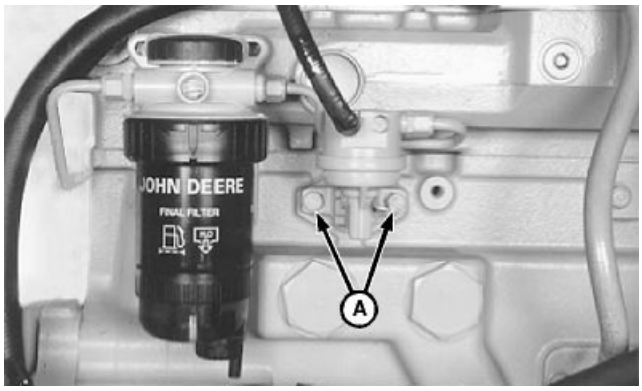

Fuel Supply Pump

RG,16,DT7499 –19–17OCT01–2/5

6. Rotate engine gear train until cap screws (A) can be removed.

A—Cap Screws

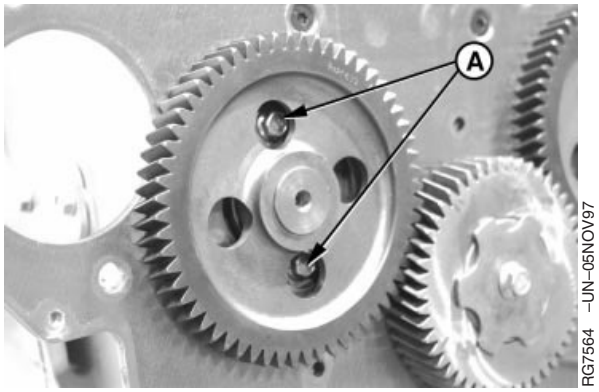

Camshaft Gear

Continued on next page

RG,16,DT7499 –19–17OCT01–3/5

IMPORTANT: Engine MUST remain in a position where camshaft followers rest against cylinder head or are held in up position with magnetic holders so that followers do not fall into engine crankcase. If camshaft followers fall into crankcase, cylinder head removal is required.

NOTE: D15001NU Magnetic Follower Holder Kit (C) may also be used to hold camshaft followers away from lobes.

7. Revolve engine on repair stand to an angle where camshaft followers and fuel supply pump actuator pin (B) falls away from camshaft lobes.

IMPORTANT: DO NOT allow camshaft lobes to drag in bushing or honed bores.

8. Carefully pull camshaft straight up, out of cylinder block.

NOTE: Rotate camshaft carefully to aid in removing.

B—Pump Actuator Pin
C—Magnetic Follower Holder Kit

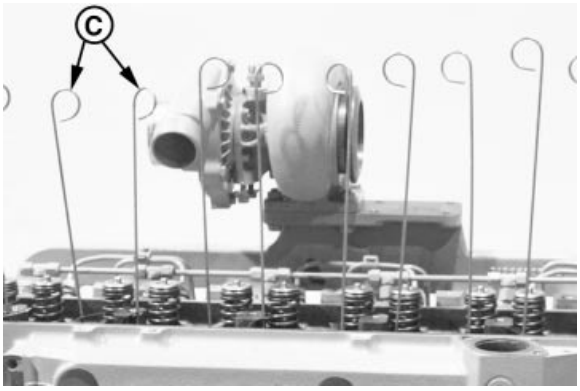

Magnetic Camshaft Follower Holder Kit

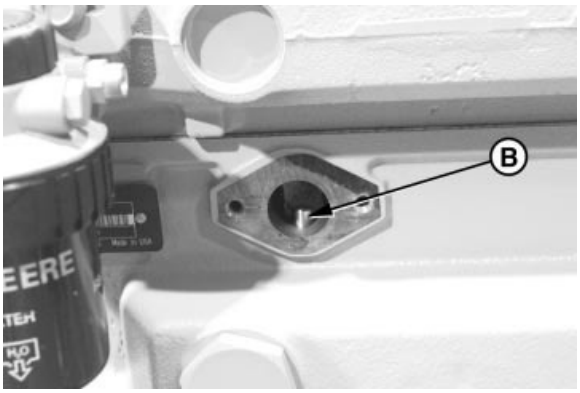

Fuel Supply Pump Actuator Pin

RG,16,DT7499 –19–17OCT01–4/5

9. Remove thrust plate (A) from slot behind camshaft gear.

A—Thrust Plate

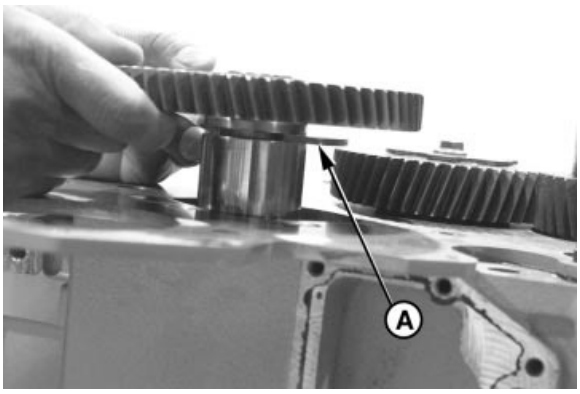

Camshaft and Thrust Plate

RG,16,DT7499 –19–17OCT01–5/5

Visually Inspect Camshaft

1. Clean camshaft in solvent. Dry with compressed air.
2. Inspect all camshaft lobes (A) and journals (B) for wear or damage. Replace camshaft as necessary.
3. Inspect camshaft for broken, cracked or excessively worn drive gear. Replace camshaft as necessary.

IMPORTANT: New camshaft followers can be used with old camshaft. DO NOT reuse old camshaft followers with a new camshaft.

NOTE: Very light score marks are acceptable if valve lift is within specification. If pitting or galling exists, replace camshaft. (See MEASURE VALVE LIFT earlier in this group.)

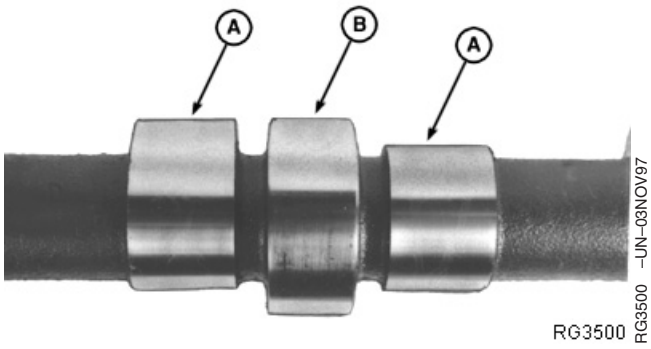

Camshaft Lobe Inspection

A—Lobes
B—Journal

RG,16,DT7498 –19–14NOV97–1/1

Measure Camshaft Thrust Plate Clearance and Thickness

Clean camshaft thrust plate and check clearance using a feeler gauge. Replace parts as necessary.

Specification	
Camshaft Thrust Plate—Clearance	0.08—0.23 mm (0.003—0.009 in.)

NOTE: Thrust plate clearance determines camshaft end play.

Check thrust plate thickness.

Specification	
Camshaft Thrust Plate—Thickness	3.96—4.01 mm (0.156—0.158 in.)



Measuring Camshaft Thrust Plate

RG,16,DT7514 –19–15NOV97–1/1

Inspect and Measure Camshaft Bushing ID and Journal OD

All engine camshafts have a (replaceable) bushing installed in No. 1 (front) camshaft bore.

1. Measure camshaft journals. If a camshaft journal is damaged or does not meet specification, install a new camshaft.

2. Measure camshaft bushing ID and remaining bores in cylinder block. If camshaft bore is damaged or is not within specification, have a qualified machine shop install new bushings.

   If No. 1 camshaft bushing ID does not meet specifications, replace camshaft bushing. (See REMOVE AND INSTALL CAMSHAFT BUSHING earlier in this group.)

Camshaft Bearing Bores and Journals—Specification

Camshaft Journal—OD	55.872—55.898 mm (2.1997—2.2007 in.)
Camshaft Bore, Front No. 1 in Block (Without Bushing)—ID	59.961—59.987 mm (2.3607—2.3617 in.)
Camshaft Bore, Front No. 1 in Block (With Bushing)—ID	55.961—55.987 mm (2.2031—2.2042 in.)
Camshaft Bore, All Except No. 1—ID	55.986—56.012 mm (2.2042—2.2052 in.)
Camshaft Journal-to-Bushing, No. 1 Bore (With Bushing)—Oil Clearance	0.063—0.115 mm (0.0025—0.0045 in.)
Camshaft Journal-to-Bushing, All Except No. 1 Bore—Oil Clearance	0.088—0.140 mm (0.0035—0.0055 in.)



Measuring Camshaft Journal OD

RG,16,DT7497 –19–14NOV97–1/1

Measure Camshaft Lobe Height

1. Measure each camshaft lobe at highest point (A) and at narrowest point (B). The difference between these dimensions is camshaft lobe height. If height is not within specification on any lobe, install a new camshaft.

Specification	
Camshaft Intake Lobe (Two-Valve Head Engines)—Height	7.05—7.31 mm (0.278—0.288 in.)
Camshaft Intake Lobe (Four-Valve Head Engines)—Height	5.88—6.14 mm (0.231—0.242 in.)
Camshaft Exhaust Lobe (Two-Valve Head Engines)—Height	6.89—7.15 mm (0.271—0.281 in.)
Camshaft Exhaust Lobe (Four-Valve Head Engines)—Height	5.84—6.10 mm (0.230—0.240 in.)

2. Measure fuel supply pump camshaft lobe diameter. If diameter is not within specification or lobe surface is grooved, install a new camshaft.

Specification	
Fuel Supply Pump Camshaft Lobe (Early)—Diameter	41.15—41.41 mm (1.62—1.63 in.)
Fuel Supply Pump Camshaft Lobe (Late)—Diameter	42.67—42.93 mm (1.68—1.69 in.)

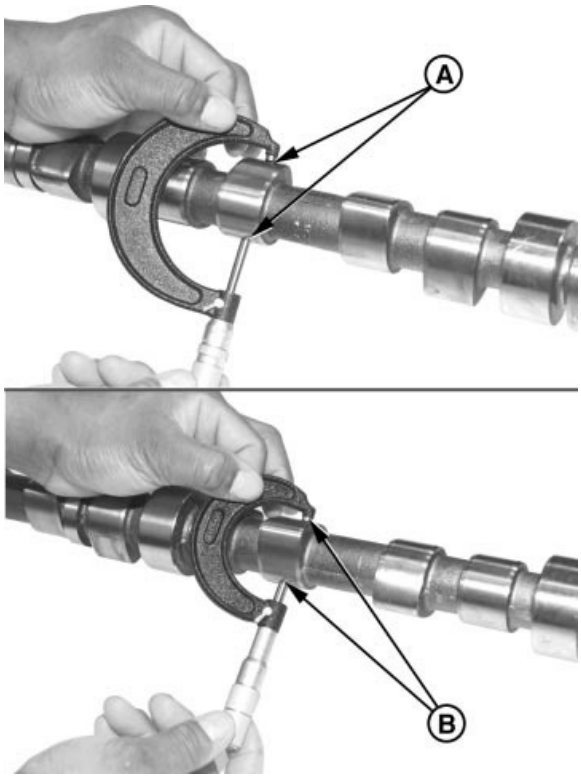

Measuring Camshaft Lobe Height

A—High Point
B—Narrow Point

RG,16,DT7496 –19–14NOV97–1/1

Inspect Camshaft Gear

IMPORTANT: Camshaft must be replaced if dropped or damaged. Camshaft gear and shaft key are no longer available as service parts. If gear is damaged, replace camshaft and gear as an assembly.

1. Clean camshaft and gear in solvent. Dry with compressed air.

2. Inspect camshaft gear for nicks and scratches. Replace camshaft and gear assembly if damage is found.

RG,16,DT7495 –19–14NOV97–1/1

Inspect Camshaft Followers

NOTE: Cylinder head must be removed before camshaft followers can be removed from engine. (See REMOVE CYLINDER HEAD in Group 020 or 021.)

02
050
20

1. Inspect followers for uneven wear or damage. Also inspect corresponding camshaft lobe for wear or damage. Replace as necessary.

2. Measure follower OD and follower bore ID in cylinder block.

Specification	
Camshaft Follower—OD	31.61—31.64 mm (1.245—1.246 in.)
Camshaft Follower Bore in Block—ID	31.70—31.75 mm (1.248—1.250 in.)
Camshaft Follower-to-Bore—Clearance	0.06—0.13 mm (0.002—0.005 in.)

Replace camshaft followers that are not within specification.

Replace cylinder block if any one camshaft follower bore is not within specification.



RG6324 –UN–23NOV97

Camshaft Follower

RG,16,DT7494 –19–14NOV97–1/1

Inspect, Measure, and Install Fuel Supply Pump Push Rod

1. Remove and clean push rod (A). Label end(s) for reassembly in same orientation.

2. Measure push rod OD (B). If OD is less than specifications listed, install a new push rod.

Specification

Fuel Supply Pump Push Rod—
OD ..... 9.891—9.917 mm
(0.3894—0.3904 in.)

3. Check crown on push rod ends. If flat or concave, replace push rod and check camshaft lobe for wear. (See VISUALLY INSPECT CAMSHAFT in this group.)

4. Measure push rod bore ID (C) in block.

Specification

Fuel Supply Pump Push Rod
Bore in Block—ID ..... 10.00—10.05 mm
(0.3937—0.3957 in.)

Repair or replace block as necessary.

5. Lubricate push rod with clean engine oil. Apply a small amount of TY6333 High Temperature Grease to both ends and install in bore with same end orientation as removed.

A—Push Rod
B—Push Rod OD
C—Push Rod Bore ID



RG7447 –UN–04NOV97

Fuel Supply Pump Push Rod

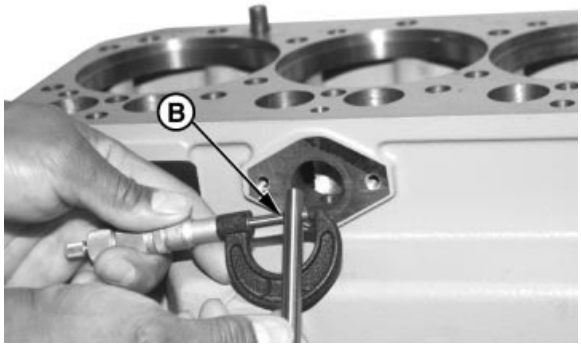

RG7496A –UN–04NOV97

Push Rod OD Wear

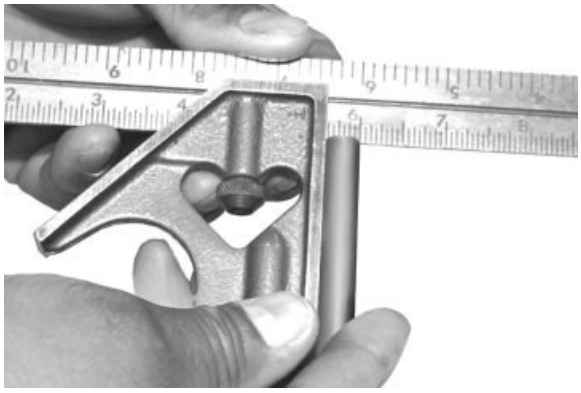

RG8113 –UN–23NOV97

Push Rod End Crown Wear

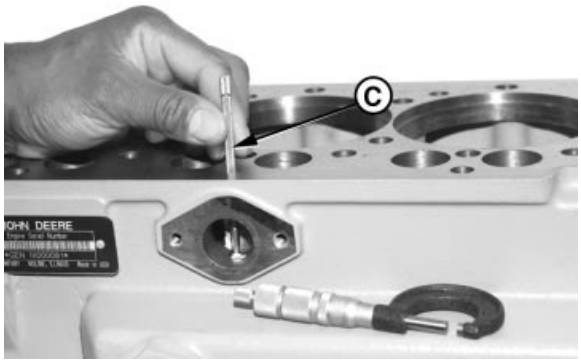

RG7495A –UN–04NOV97

Push Rod Bore in Block Wear

RG,16,DT7493 –19–14NOV97–1/1

Remove Balancer Shafts (If Equipped—4-Cylinder Engines)

02
050
22

1. If equipped, remove timing wheel. (See REMOVE AND INSTALL CRANKSHAFT TIMING WHEEL (TWO= VALVE HEAD ENGINES WITH VP44 OR DE10 FUEL INJECTION PUMPS AND ALL FOUR-VALVE HEAD ENGINES in Group 040.)

NOTE: Balancer shafts may be equipped with fixed weights, or removable weights attached with one or two cap screws.

2. Remove lower idler gear and oil pump gear (shown removed).

3. On later engines with removable weights[1], weights (A) must be removed before removing balancer shaft.

4. Remove cap screws from balancer shaft thrust plate as shown.

A—Weights
B—Cap Screw
C—Key

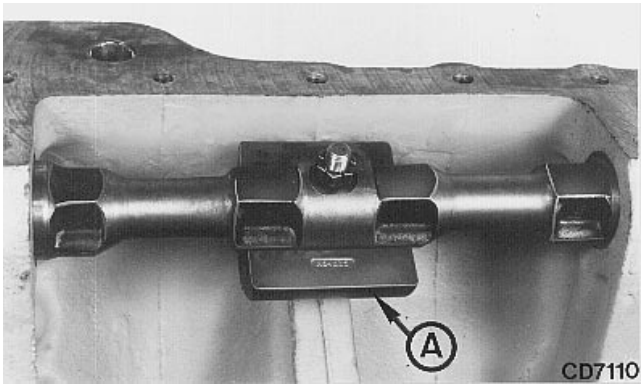

Balancer Shaft Weight (Single Cap Screw Mounted)

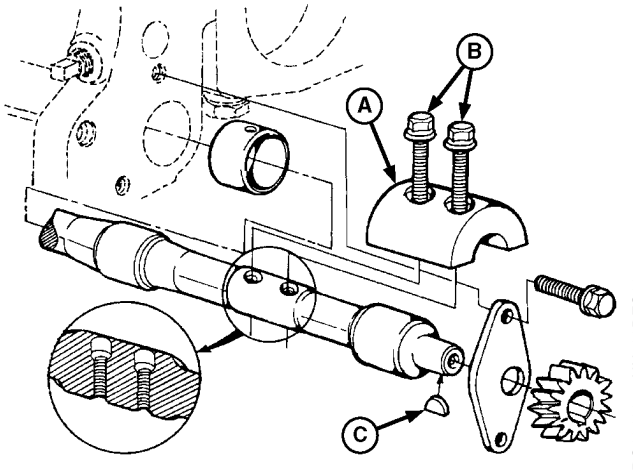

Balancer Shaft Weight (Dual Cap Screw Mounted)

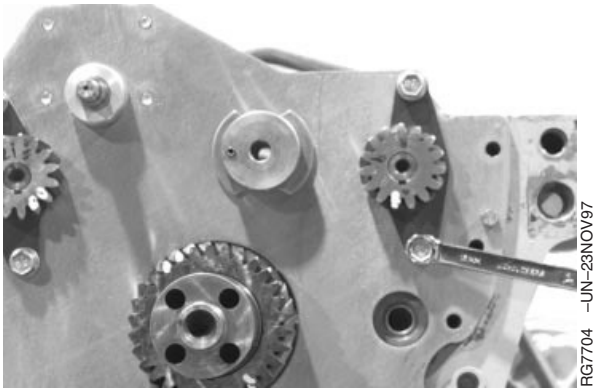

Thrust Plate Cap Screw

[1]Serial Numbers: Dubuque-built engines (700877—), Saran-built engines (500212—), Torreon-built engines (001000—).

Continued on next page

RG,16,DT7491 –19–20NOV03–1/2

IMPORTANT: Identify left and right balancer shafts for correct assembly. Permanently mark a letter "R" or letter "L" on the rear of the shaft for identification. Interchanging shaft locations could cause premature wear of shafts and bushings.

NOTE: When removing balancer shafts, use care that neither shaft journals nor bushings are damaged in cylinder block.

5. Remove balancer shafts.

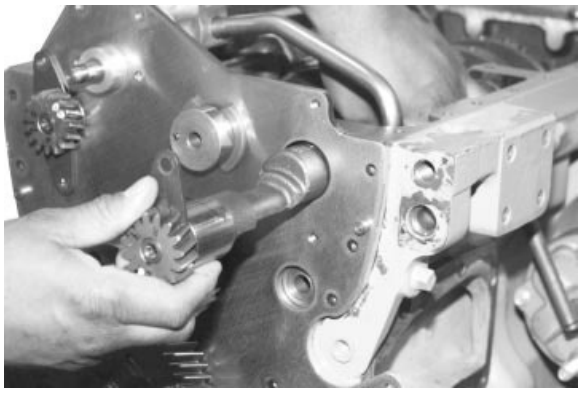

RG7718 –UN–23NOV97

Balancer Shaft (S.N. — 700876 Shown)

RG,16,DT7491 –19–20NOV03–2/2

Inspect and Measure Balancer Shaft Bushings and Journals

1. Inspect, measure and record bushing ID (A) at all locations.

2. Measure balancer shaft journal OD (B). Difference between journal OD and bushing ID is oil clearance.

   If oil clearance is not within specification, install new bushings and, if necessary, new balancer shaft.

Specification

Balancer Shaft Bushing (New)—ID	40.177—40.237 mm (1.5818—1.5841 in.)
Balancer Shaft Journal—OD	40.135—40.161 mm (1.5801—1.5811 in.)
Balancer Shaft Journal-to-Bushing—Oil Clearance	0.016—0.102 mm (0.0006—0.0040 in.)
Cylinder Block Bore for Balancer Shaft Bushing—ID	43.262—43.288 mm (1.7032—1.7042 in.)

A—Bushing ID
B—Journal OD



RG7705A –UN–07NOV97

Measuring Balancer Shaft Bushing ID



RG7706 –UN–07NOV97

Measuring Balance Shaft Journal OD

RG,16,DT7490 –19–14NOV97–1/1

Remove and Install Balancer Shaft Bushings

IMPORTANT: Engines with and without balancer shafts use balancer shaft bushings.

Later non-balancer shaft engines may use a semi-finished bushing with no oil hole. Replace with a finished bushing rotated to cover oil hole in cylinder block.

Cylinder block front plate must be removed in order to replace balancer shaft bushings.

1. Remove all fuel lines from injection or rotary pump.
2. Remove front plate. See REMOVE CYLINDER BLOCK FRONT PLATE, later in this group.

NOTE: Semi-finished bushings are removed by using JD249 (JD-249) Balancer Shaft Bushing Driver alone.

3. Remove bushings from block with JD249 (JD-249)[1] Balancer Shaft Bushing Driver and JDG963 Adapter. To remove the rear (third) bushing, the flywheel housing must be removed.

IMPORTANT: On balancer shaft equipped engines make sure oil holes in bushing and block are aligned for proper bushing and journal lubrication.

On non-balancer shaft engines make sure bushing is rotated 90° to cover cylinder block oil hole.

4. Lubricate bushings with clean engine oil and install in block with same tools used during removal.


RG7959 –UN–15JAN98

Removing Bushing

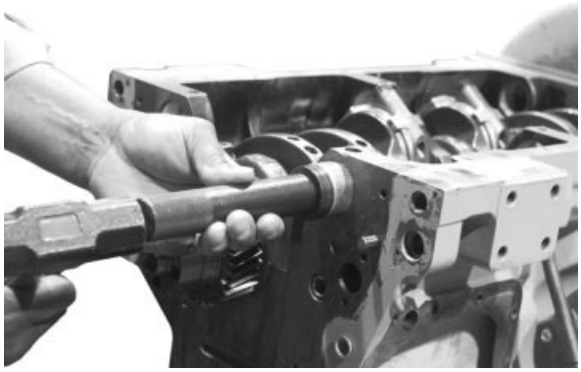
RG7960 –UN–15JAN98

Installing Bushing

[1]*Order JD-249 when tool is ordered from European Parts Distribution Center (EPDC)*

Continued on next page

5. On balancer shaft equipped engines, insert balancer shaft to check for bushing-to-shaft clearance. If shaft can be rotated by hand with a slight-to-moderate drag, adequate bushing-to-balancer shaft clearance exists. It is not necessary to hone bushings to obtain specified oil clearance. Excessive clearance can result in shaft seizure.

RG,16,DT7489 –19–17OCT01–2/2

Inspect Balancer Shaft Gears and Thrust Plates

RG7708 –UN–07NOV97



Balancer Shaft Thrust Plate

A—Thrust Plate

1. Inspect for broken, cracked or excessively worn gears.

NOTE: Gear removal is required for thrust plate removal.

2. Inspect thrust plate (A) for scoring or excessive wear.

	Specification
Balancer Shaft Thrust Plate (New)—Thickness	2.97—3.02 mm (0.117—0.119 in.)

RG,16,DT7488 –19–14NOV97–1/1

Remove and Install Balancer Shaft Gears

IMPORTANT: DO NOT intermix gears and shafts. Shafts are finish lapped in different locations; therefore, balancer shafts MUST BE installed in the location from which removed. Reversing shaft locations could result in excessive bushing and shaft wear. If in doubt about proper shaft locations, replace the balancer shaft and bushings.

NOTE: Balancer shaft kits provided for service are delivered without gear.

1. Support back side of gear in a press and push on balancer shaft to remove gear.
2. Inspect Woodruff key or spring pin (some engines), gear, and thrust plate for cracks and wear. Replace if necessary.

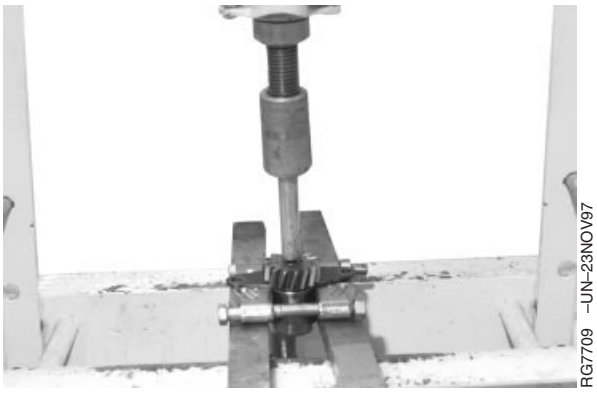

Remove Balancer Shaft Gear from Shaft

RG,16,DT7487 –19–17OCT01–1/2

3. Position balancer shaft in JD247 (JD-247)[1] Balancer Shaft Holding Tool or bearing pulling attachment (A).
4. Install thrust plate.
5. Use Woodruff key or spring pin (some engines) to index gear on balancer shaft. Be sure timing mark is on front face of gear.
6. Press gear onto shaft with a tube-type driver (B) until gear is flush with shaft.

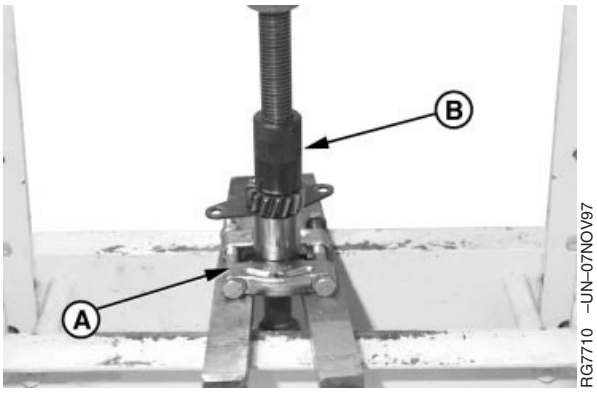

Balancer Shaft Gear to Shaft

A—Bearing Pulling Attachment
B—Tube-Type Driver

Specification

Balancer Shaft Thrust Plate-to-Gear—Clearance	0.05—0.26 mm (0.002—0.010 in.)

[1]Order JD-247 when tool is ordered from European Parts Distribution Center (EPDC)

RG,16,DT7487 –19–17OCT01–2/2

Remove Cylinder Block Front Plate

Before the front plate can be removed, the following components must first be removed:

- Timing gear cover. (See REMOVE TIMING GEAR COVER in this group.)
- Timing Wheel. (See REMOVE AND INSTALL CRANKSHAFT TIMING WHEEL (TWO-VALVE HEAD ENGINES WITH VP44 OR DE10 FUEL INJECTION PUMPS AND ALL FOUR-VALVE HEAD ENGINES in Group 040.)
- Camshaft and gear (A). (See REMOVE CAMSHAFT in this group.)
- Injection pump drive gear (B) and injection pump. See Section 02, Group 090 of CTM207 (Mechanical Fuel Systems), CTM170 (Level 4 Electronic Fuel Systems), CTM331 (Level 12 Electronic Fuel Systems), CTM284 (Level 1 Electronic Fuel Systems) or CTM220 (Level 11 Electronic Fuel Systems with Denso High Pressure Common Rail).
- Oil pump drive gear (C) and oil pump. (See REMOVE ENGINE OIL PUMP in Group 060.)
- Idler gears (D)
- Balancer shafts (E)[1] (See REMOVE BALANCER SHAFTS in this group.)
- Oil pressure regulating valve, if equipped with cartridge type. (See REMOVE AND INSTALL OIL PRESSURE REGULATING VALVE in Group 060.)

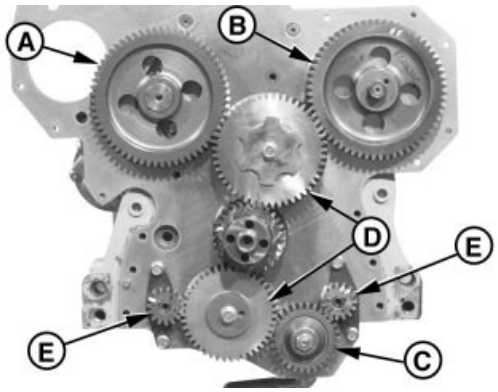

RG7703A –UN–07NOV97

4-Cylinder Engine (Two-Valve Head Engine Shown)

A—Camshaft and Gear
B—Injection Pump Drive Gear
C—Oil Pump Drive Gear
D—Idler Gears (Upper and Lower)
E—Balancer Shafts[1]

[1] 4-cylinder engine only

Continued on next page

RG,16,DT7486 –19–24MAY02–1/4

1. Remove four countersunk, TORX® screws (A) from gear and oil pump using T-40 TORX® adapter.

NOTE: On earlier engines[1], there are two countersunk TORX® screws used in place of threaded studs (C).

On four-valve head engines, double ended studs are used to hold the fuel injection pump and timing gear cover. Remove if needed.

2. Remove six threaded studs (B) and (C) using E-8 TORX® Socket.

3. Remove front plate (D).

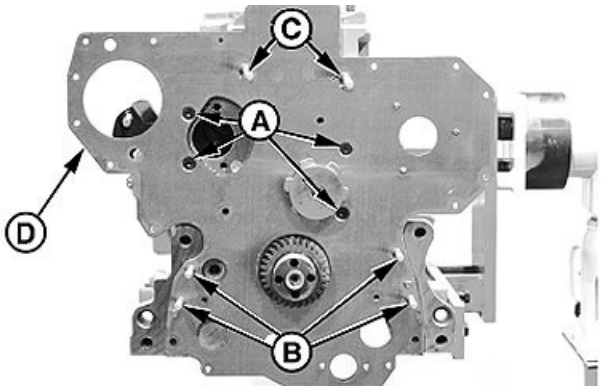

RG9064 –UN–16MAR98

Cylinder Block Front Plate (Two-Valve Head Engine Shown)

A—Screws
B—Threaded Studs
C—Threaded Studs
D—Front Plate

TORX is a registered trademark of Camcar/Textron

[1] Serial Numbers: Dubuque-built engines (—703904), Saran-built engines (—516217), Torreon-built engines (does not apply).

RG,16,DT7486 –19–24MAY02–2/4

4. Remove oil bypass valve and spring.



RG7571 –UN–23NOV97

Oil Bypass Valve and Spring

Continued on next page

RG,16,DT7486 –19–24MAY02–3/4

IMPORTANT: All surfaces must be free of oil and dirt.

5. Thoroughly clean front face of cylinder block.

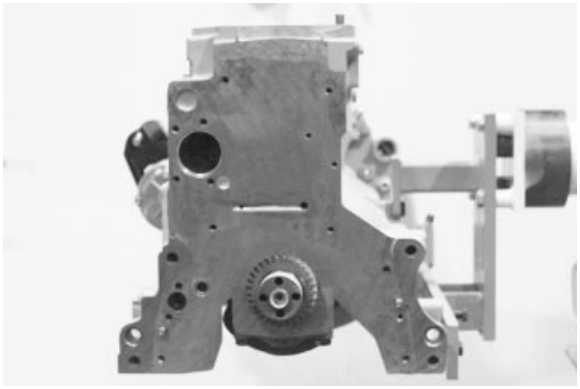

Front Face of Cylinder Block

RG,16,DT7486 –19–24MAY02–4/4

Measure Idler Gear Bushing and Shaft

1. Measure idler gear bushing ID and shaft OD to determine oil clearance. If oil clearance exceeds specification, replace worn parts.

02
050
30

Specification

Upper Idler Gear Bushing (Two-Valve Head Engine) (30 mm Wide Gear)—ID	69.802—69.832 mm (2.7481—2.7493 in.)
Upper Idler Gear Bushing (Two-Valve Head Engine) (22 mm Wide Gear)—ID	44.49—44.54 mm (1.751-1.753 in.)
Upper Idler Gear Bushing (Four-Valve Head Engine)—ID	92.732—92.762 mm (3.6509—3.6520 in.)
Lower Idler Gear Bushing—ID	44.489—44.539 mm (1.7515—1.7535 in.)
Upper Idler Gear Shaft (Two-Valve Head Engine) (30 mm Wide Gear)—OD	69.757—69.777 mm (2.7463—2.7471 in.)
Upper Idler Gear Shaft (Two-Valve Head Engine) (22 mm Wide Gear)—OD	44.43—44.46 mm (1.749-1.750 in.)
Upper Idler Gear Shaft (Four-Valve Head Engine)—OD	92.687—92.707 mm (3.6491—3.6499 in.)
Lower Idler Gear Shaft—OD	44.437—44.463 mm (1.7495—1.7505 in.)
Upper Idler Gear Bushing-to-Shaft (Two-Valve Head Engine)—Oil Clearance	0.075—0.125 mm (0.0030—0.0049 in.)
Upper Idler Gear Bushing-to-Shaft (Four-Valve Head Engine)—Oil Clearance	0.0025—0.075 mm (0.0010—0.0030 in.)
Lower Idler Gear Bushing-to-Shaft—Oil Clearance	0.026—0.102 mm (0.0010—0.0040 in.)
Upper Idler Gear—End Play	0.070—0.170 mm (0.0027—0.0066 in.)
Lower Idler Gear—End Play	0.070—0.330 mm (0.0027—0.0129 in.)

2. If idler gear end play, measured earlier in this group, was out of specification, remove idler shaft and thrust washer from front plate. (See REMOVE LOWER AND UPPER IDLER SHAFTS, later in this group.)



RG7573 –UN–23NOV97

Measuring Idler Gear Bushing ID

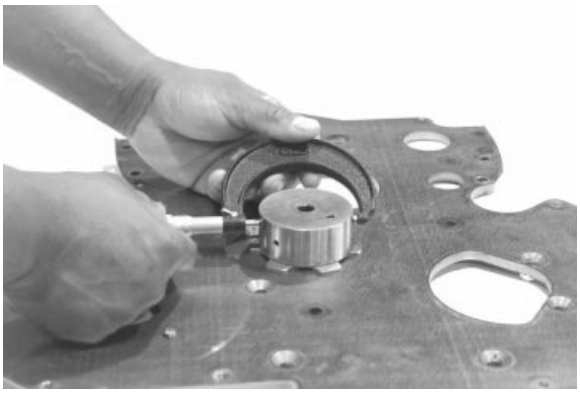

RG7574 –UN–23NOV97

Measuring Idler Shaft Journal ID

Continued on next page

RG,16,DT7484 –19–03JUN02–1/2

3. Check thrust washer for wear.

4. Measure idler gear hub width and shaft width. Replace worn parts that are out of specification.

RG,16,DT7484 –19–03JUN02–2/2

Remove Idler Gear Bushings

NOTE: Upper idler gear bushing for "wide" 30 mm (1.18 in.) gear and four-valve head engine upper idler gear, is not replaceable. If bushing is worn, replace gear assembly.

1. For "narrow" 22 mm (0.87 in.) upper idler gear bushing, press worn bushing out of gear using 27527 Disc Driver from D01045AA Master Driver Set and JDG537 (OTC815) Handle.

2. For lower idler gear bushing, press worn bushing out of gear using discs from D01045AA Master Driver Set and JGD537 (OTC815) Handle.



22 mm (0.87 in.) Upper Idler Gear



Lower Idler Gear

RG,16,DT7483 –19–03JUN02–1/1

Install Idler Gear Bushings

NOTE: Upper idler gear bushing for "wide" 30 mm (1.18 in.) gear and four-valve head engine upper idler gear, is not replaceable. If bushing is worn, replace gear assembly.

IMPORTANT: Bushing failure will result if upper and lower bushings are interchanged. Lower idler gear bushings are splash lubricated and have a spiral oil groove; upper idler gear bushings are pressure lubricated and DO NOT have oil grooves.

1. Coat ID and OD of idler gear bushing and ID of gear with TY6333 High-Temperature Grease.
2. Install bushing into upper "narrow" 22 mm (0.087 in.) idler gear using JD252 (JD-252)[1] Driver[2] and JDG537 (OTC815) Handle.
3. Install bushing into lower idler gear using discs and driver from D01045AA Master Driver Set.



Upper Idler Gear



Lower Idler Gear

[1]Order JD-252 when tool is ordered from European Parts Distribution Center (EPDC)

[2] Discs from D01045AA Master Driver Set can be used if JD252 (JD-252) Driver is not available.

DPSG,OUO1004,43 –19–03JUN02–1/1

Remove Lower and Upper Idler Shafts

1. Remove lower idler shaft and thrust washer by driving or pressing on shaft from block side of front plate.

NOTE: On Four-Valve Head Engine, upper idler, rear thrust washer can be removed without removing upper idler shaft.

2. Remove upper idler shaft and thrust washer by driving or pressing on shaft from block side of front plate.



Upper Idler Shaft



Lower Idler Shaft

RG,16,DT7482 –19–14NOV97–1/1

Clean and Inspect Front Plate

IMPORTANT: All surfaces must be free of oil and dirt.

1. Clean front plate with hot soapy water.
2. Rinse well with plain water to remove all soap residue from gasket surface.
3. Inspect front plate for damage.

RG,16,DT7481 –19–14NOV97–1/1

Transfer Fuel Injection Pump Timing Mark onto Replacement Front Plate (Two-Valve Head Engine with Mechanical Fuel Injection)

02
050
34

IMPORTANT: Replacement front plates do not have an injection pump timing mark. It is extremely important that the timing mark be accurately transferred from original front plate to the replacement plate in the exact location for correct injection pump timing.

1. Position DFRG5 Aluminum Template (B) onto original front plate (C) as shown. (See Section 05, Group 190, Dealer Fabricated Tools, for manufacturing detail.) Install and tighten three 3/8-16 cap screws securely.
2. Transfer injection pump timing mark (A) from previous front plate onto template using a fine tip marker and straightedge. Remove template from front plate being replaced.
3. Attach template (with timing mark) to new replacement front plate and tighten cap screws securely.
4. Transfer timing mark from the template to the new front plate using a scribe. Scribe deep enough so mark becomes a permanent reference.
5. Remove template from front plate and install front plate. (See INSTALL CYLINDER BLOCK FRONT PLATE later in this group).

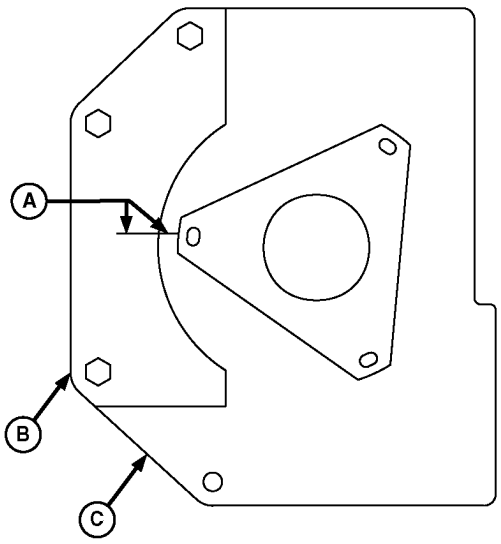

RG9057 –UN–16MAR98

Front Plate Timing Mark

A—Timing Mark
B—Aluminum Template
C—Front Plate

RG,16,DT7480 –19–14NOV97–1/1

Install Idler Shaft Spring Pins (If Equipped)

Install spring pins in lower (A) and upper (B) idler gear shafts. This locks thrust washer to shaft to allow 4.32 mm (0.170 in.) projection (C) above front face of each shaft. The pins on idler shafts extend through both rear and front thrust washers.

Specification

Lower and Upper Idler Shaft
Spring Pin (D)—Protrusion..... 2.79—4.83 mm (0.11—0.19 in.)

A—Lower Idler Gear Shaft
B—Upper Idler Gear Shaft
C—4.32 mm (0.170 in.) Projection
D—2.79—4.83 mm (0.11—0.19 in.) Protrusion

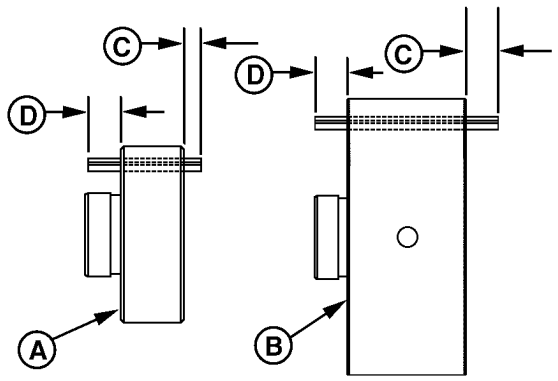

RG9135 –UN–18MAY98

Idler Shaft Spring Pins

02
050
35

RG,16,DT7479 –19–14NOV97–1/1

Install Upper Idler Shaft in Front Plate

2-Valve Head

IMPORTANT: Oil holes in idler shaft must be properly indexed to provide adequate lubrication to the idler gear bushing. Install shaft so the oil hole is pointing toward top of engine ±15°. Install thrust washer (A) with "X" mark facing away from gear (toward front plate) (early models) or with notches facing gear (late models).

1. Install rear thrust washer (A) and upper idler shaft into front plate. Spring pin (if equipped) must extend through hole in thrust washer and front plate.

2. Drive or press shaft into front plate until thrust washer is fully seated.

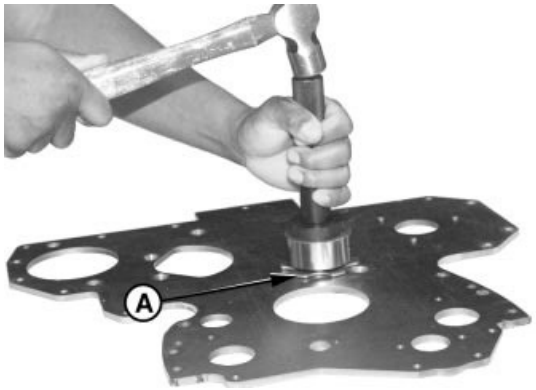

RG7581 –UN–05NOV97

Upper Idler Shaft in Front Plate

A—Thrust Washer

Continued on next page

RG,16,DT7478 –19–21NOV03–1/2

4-Valve Head

Press pin (A) into front plate until flush with rear surface.

A—Upper Idler Gear Hub Pin



Upper Idler Shaft Pin

RG,16,DT7478 –19–21NOV03–2/2

Install Lower Idler Shaft in Front Plate

NOTE: Spring pin (B) is only used on later engines.

IMPORTANT: Install thrust washer (A) with "X" mark facing away from gear (toward plate).

1. Install thrust washer (A) and lower idler shaft with spring pin (B). Spring pin must extend through hole in thrust washer and front plate.
2. Drive shaft into front plate (C) until thrust washer is fully seated.

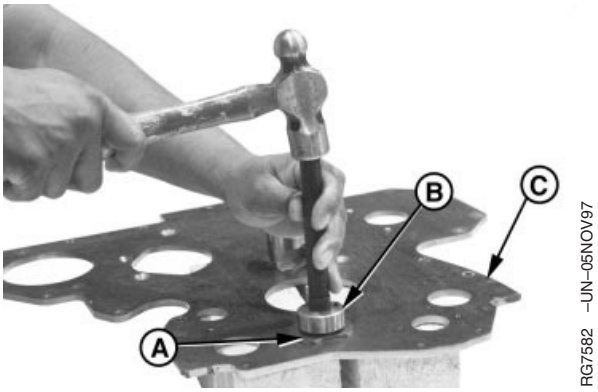

Lower Idler Shaft in Front Plate

A—Thrust Washer
B—Spring Pin
C—Front Plate

RG,16,DT7477 –19–15DEC03–1/1

Install Cylinder Block Front Plate

1. Install oil bypass valve and spring into block.
2. If not previously done, use a brass scraper and remove any previously applied sealant.

IMPORTANT: Be sure cylinder block and front plate surfaces are free of oil, dirt, previously applied sealant, and cleaning agents.

3. Wash gasket surfaces with a steam cleaner using hot soapy water. Rinse well with plain water to remove all soap residue from gasket surface.



RG7571 –UN–23NOV97

Oil Bypass Valve and Spring

RG,16,DT7476 –19–03JUN02–1/3

4. Apply LOCTITE® 515 Flexible Form-In-Place Gasket (PM38655) in a continuous 1.5—2.0 mm (0.06—0.08 in.) bead (A) to cylinder block.
5. Locate bead in the center of the mating surfaces and completely encircle cap screw and dowel holes.

A—Flexible Gasket Pattern

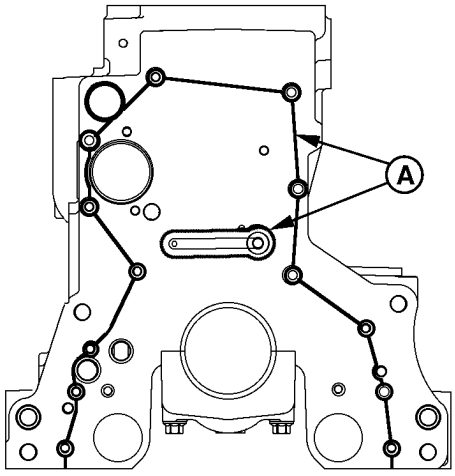

RG8030 –UN–14NOV97

Flexible Gasket Application Pattern

LOCTITE is a registered trademark of the Loctite Corp.

Continued on next page

RG,16,DT7476 –19–03JUN02–2/3

6. Install front plate (D).

IMPORTANT: Tighten screws to specified torque using a cross pattern, within 10 minutes after parts are assembled.

NOTE: On earlier engines[1], there are two countersunk TORX® screws in place of threaded studs (C).

On four-valve head engines, double ended studs are used to hold the fuel injection pump and timing gear cover. Install if needed.

Specification

Front Plate Countersunk TORX® Screws (A)—Torque	25 N•m (221 lb-in.)
Front Plate Threaded Studs (B) and (C)—Torque	35 N•m (26 lb-ft)

7. If required, install cartridge type oil pressure regulating valve. (See REMOVE AND INSTALL OIL PRESSURE REGULATING VALVE in Group 060.)

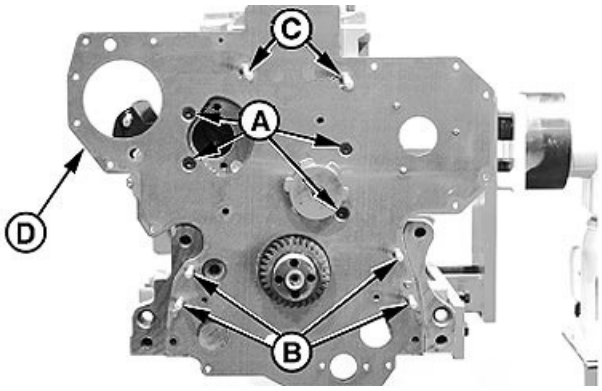

RG9064 –UN–16MAR98

Front Plate (Two-Valve Head Engine Shown)

A—Countersunk TORX® Screws
B—Threaded Studs
C—Threaded Studs
D—Front Plate

TORX is a registered trademark of Camcar/Textron

[1] Serial Numbers: Dubuque-built engines (—703904), Saran-built engines (—516217), Torreon-built engines (does not apply).

RG,16,DT7476 –19–03JUN02–3/3

Install and Time Balancer Shafts (If Equipped—4-Cylinder Engines)

1. Using JDE81-1 or JDE83 Flywheel Turning Tool and JDG1571 or JDE81-4 Timing Pin, lock No. 1 piston at TDC compression stroke.

2. Lubricate balancer shaft bushings and journals with clean engine oil.

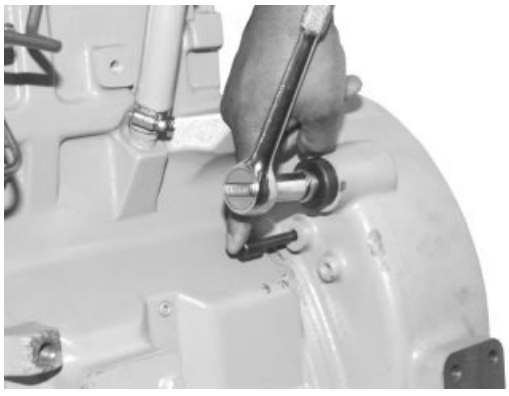

RG7711 –UN–23NOV97

Engine Rotation Tool and Timing Pin in Place

Continued on next page

RG,16,DT7475 –19–21NOV03–1/8

NOTE: Balancer shafts can also be identified by stamped letters at rear of shafts.

"R" or "RH" for right-hand side shaft.

"L" or "LH" for left-hand side shaft.

3. Identify right and left balancer shafts according to the gear timing marks as shown.

A—Right-hand Side Shaft (Camshaft Side)
B—Left-hand Side Shaft (Injection Pump Side)

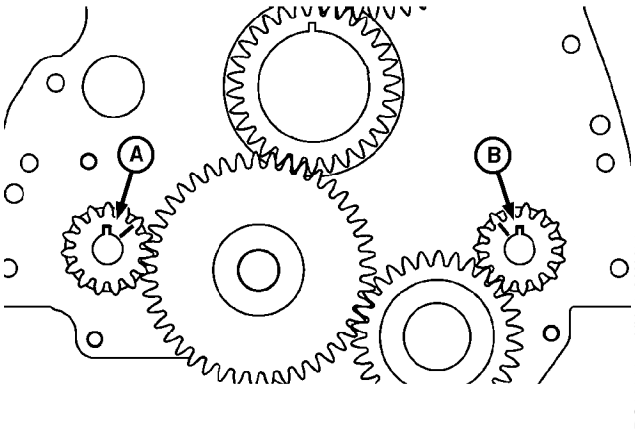

Front Face

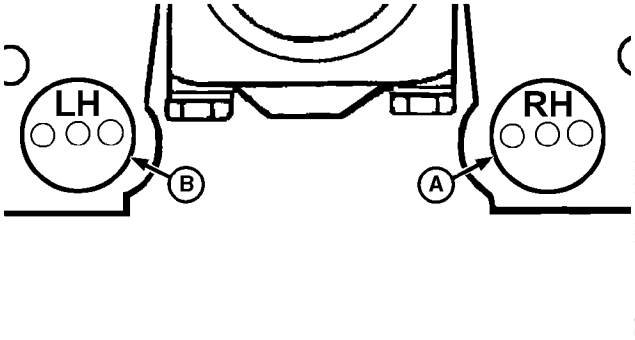

Rear Face

RG,16,DT7475 –19–21NOV03–2/8

IMPORTANT: Balancer shafts MUST BE installed in the location from which removed. Reversing shaft locations could result in excessive bushing and shaft wear. If in doubt about proper shaft locations, replace the balancer shaft and bushings.

4. Install balancer shafts and thrust plates. Tighten thrust plate cap screws to specifications.

Specification	
Balancer Shaft Thrust Plate Cap Screws—Torque	40 N•m (29.5 lb-ft)

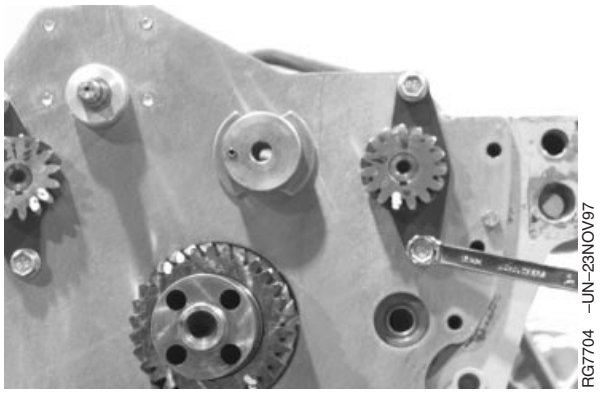

Balancer Shafts and Thrust Plates

Continued on next page

RG,16,DT7475 –19–21NOV03–3/8

IMPORTANT: Ensure weights are installed to shaft side opposite key (C)

5. Later engines[1] have balancer shafts with removable weights. Install weights to balancer shafts using new cap screws and nuts. Tighten to specifications.

Specification	
Balancer Shaft Removable Weights (One-Bolt Weights)—Torque	58 N•m (43 lb-ft)
Balancer Shaft Removable Weights (Two-Bolt Weights)—Torque	40 N•m (30 lb-ft)

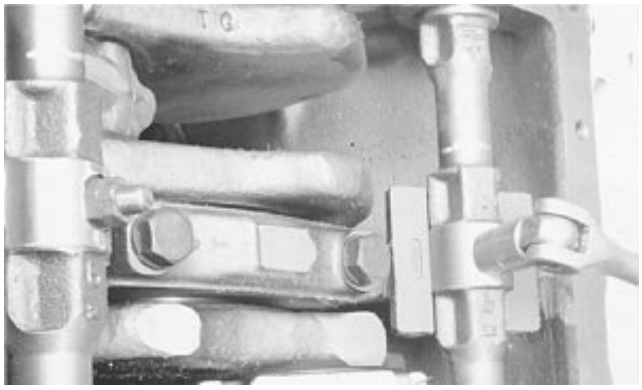
T91157 –UN–09NOV88

Balancer Shaft Removable Weights

A—Weight
B—Bolt (1 or 2 used)
C—Key
D—Nut

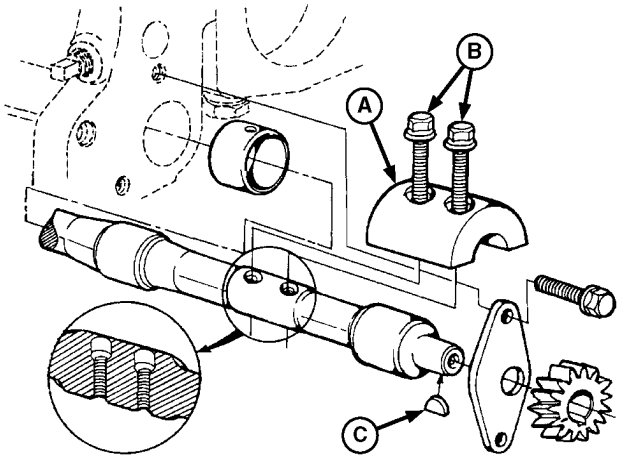

RG12432 –UN–02DEC03

Two-Bolt Weight

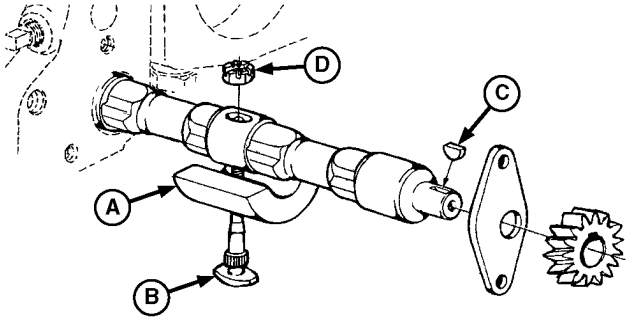

RG13388 –UN–17DEC03

Single Bolt Weight

[1]*Serial Numbers: Dubuque-built engines (700877—), Saran-built engines (500212—), Torreon-built engines (001000—).*

Continued on next page

RG,16,DT7475 –19–21NOV03–4/8

6. Turn right (camshaft side) balancer shaft so timing mark on gear is aligned with JD254A (JD-254A)[1] Timing Tool (A). Timing mark on balancer shaft gear must point to centerline of crankshaft when correctly timed.

NOTE: Keyway (B) in balancer shaft gear will be at 12 o'clock position, when engine is locked at No. 1 TDC compression.

7. Apply TY6333 High-Temperature Grease to idler gear bushing ID and shaft OD. Install lower idler gear without turning balancer shaft.

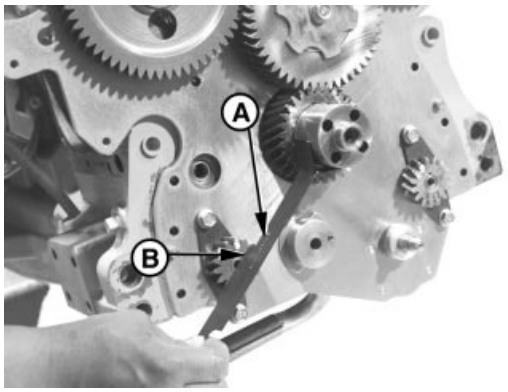

RG7712 –UN–07NOV97

Timing Right (Camshaft Side) Balancer Shaft

A—Timing Tool
B—Keyway

[1]Order JD-254A when tool is ordered from European Parts Distribution Center (EPDC)

RG,16,DT7475 –19–21NOV03–5/8

IMPORTANT: DO NOT use zinc coated hardware to retain idler gear. If cap screw is zinc coated, replace with new phosphate coated cap screw. See parts catalog for appropriate part number.

NOTE: Install thrust washer with "X" mark facing away from gear.

8. Install thrust washer over lower idler gear (C) and shaft.

9. Lubricate and install cap screw through idler shaft into threaded leg of oil pump housing and finger tighten only.

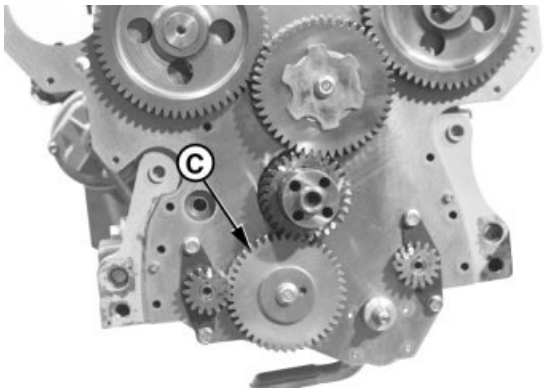

RG7713 –UN–07NOV97

Lower Idler Gear and Thrust Washer

C—Lower Idler Gear

Continued on next page

RG,16,DT7475 –19–21NOV03–6/8

10. Turn left (injection pump side) balancer shaft so timing mark on gear is aligned with JD254A (JD-254A)[1] Timing Tool (A).
11. Install oil pump gear. Finger tighten gear retaining nut.
12. Recheck gear timing for both balancer shafts

A—Timing Tool

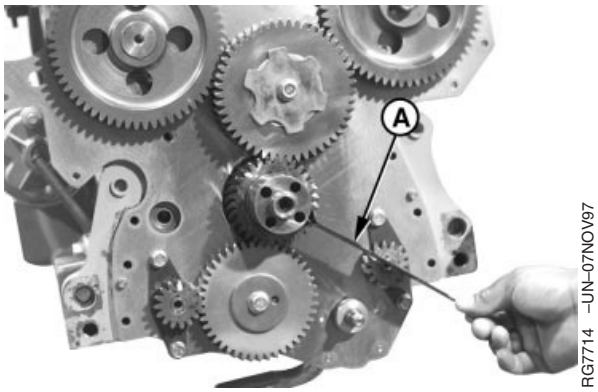

Timing Left (Engine Pump Side) Balancer Shaft

[1]Order JD-254A when tool is ordered from European Parts Distribution Center (EPDC)

RG,16,DT7475 –19–21NOV03–7/8

13. Tighten oil pump drive gear retaining nut to specifications. Stake nut to shaft in three places (B). (See INSTALL ENGINE OIL PUMP in Group 060 for oil pump installation.)

Specification	
Oil Pump Drive Gear Staked Nut—Torque	50 N•m (37 lb-ft)

14. Tighten lubricated lower idler gear cap screws to specifications.

Specification	
Lower Idler Gear Cap Screw (Lubricated Threads)—Torque	70 N•m (53 lb-ft)

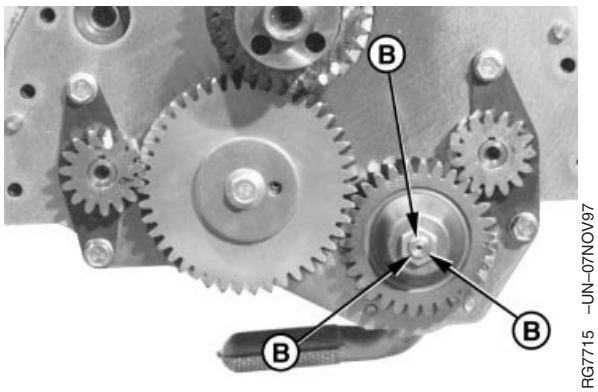

Early Model Shown

B—Stake Points

RG,16,DT7475 –19–21NOV03–8/8

Install Camshaft

1. Using JDE81-1 or JDE83 Flywheel Turning Tool and JDG1571 or JDE81-4 Timing Pin, lock No. 1 piston at TDC compression stroke.

NOTE: Injection pumps must be properly installed and timed during camshaft installation.

For Stanadyne and Delphi/Lucas rotary pumps, see following procedure in this group.

For Denso high-pressure pumps, see appropriate pump installation procedure in Section 02, Group 090 of CTM220 (Level 11 Electronic Fuel Systems with Denso High Pressure Common Rail) or CTM320 (Level 14 Electronic Fuel Systems with Denso High Pressure Common Rail) .

For static lock-pin timing of Bosch VP44 pumps, see BOSCH VP44 ROTARY INJECTION PUMP TIMING in Section 02, Group 90 of CTM170 (Level 4 Electronic Fuel Systems). Then, see INSTALL BOSCH VP44 FUEL INJECTION PUMP in Section 02, Group 090 of CTM170 (Level 4 Electronic Fuel Systems).

For static lock-pin timing of Denso and Motorpal pumps, see DENSO AND MOTORPAL IN-LINE INJECTION PUMP TIMING in Section 02, Group 090 of CTM207 (Mechanical Fuel Systems). Then, see the appropriate pump installation procedure in Section 02, Group 090 of CTM207 (Mechanical Fuel Systems).

For static lock-pin timing of Stanadyne DE10 pumps, see INJECTION PUMP STATIC TIMING in Section 02, Group 090 of CTM331 (Level 12 Electronic Fuel Systems).

For static timing of Delphi/Lucas DP201 pumps, see FUEL INJECTION PUMP TIMING in Section 02, Group 090 of CTM284 (Level 1 Electronic Fuel Systems).

2. Install fuel injection pump and drive gear. See appropriate reference as identified in NOTE above.

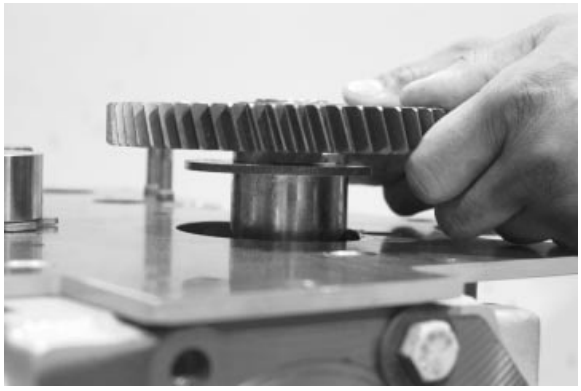

RG7583 –UN–23NOV97

Camshaft and Thrust Plate in Cylinder Block

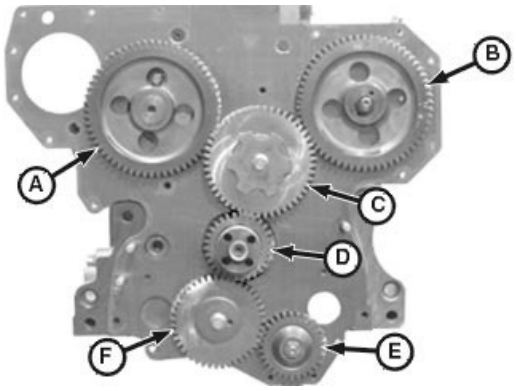

RG11790 –UN–27SEP01

6-Cylinder Engine

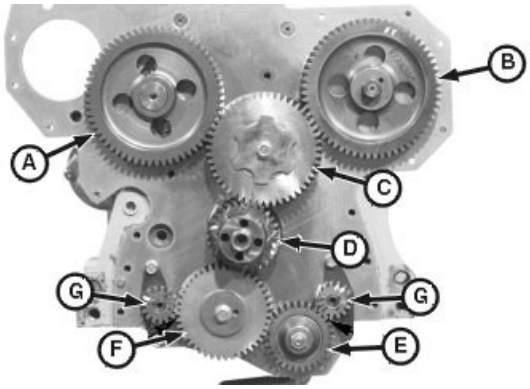

RG11791 –UN–27SEP01

4-Cylinder Engine

A—Camshaft Gear
B—Fuel Injection Pump Gear
C—Upper Idler Gear
D—Crankshaft Gear
E—Oil Pump Gear
F—Lower Idler Gear
G—Balancer Shaft Gears (Some 4-Cylinder Engines)

Continued on next page

3. Lubricate camshaft bearing journals, lobes, and followers with TY6333 High-Temperature Grease.

IMPORTANT: DO NOT allow camshaft lobes to drag on camshaft bore or bushing surfaces while installing camshaft. Bearing surfaces may become scratched or scored. Rotate camshaft during installation to avoid obstruction in any bore.

4. Install camshaft and thrust plate in cylinder block. Be careful not to damage bushing ID.

5. Install thrust plate cap screws and tighten to specifications.

	Specification
Camshaft Thrust Plate Cap Screws—Torque	35 N•m (26 lb-ft)

RG19661,000001D –19–01JUL05–2/8

6. **On Two-Valve Head Engine:**

   a. With JD254A (JD-254A)[1] Timing Tool resting on nose of crankshaft and center of camshaft (as shown), turn camshaft until timing mark (A) on camshaft gear aligns with timing tool.

A—Timing Mark

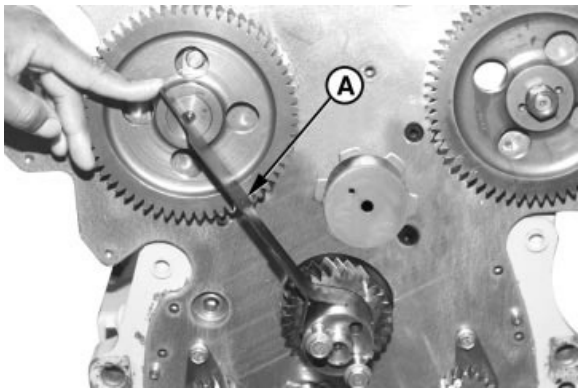

Setting Camshaft Timing

[1]Order JD-254A when tool is ordered from European Parts Distribution Center (EPDC)

Continued on next page

RG19661,000001D –19–01JUL05–3/8

NOTE: Denso, Motorpal, Bosch VP44 and Stanadyne DE10 injection pumps are static lock-pin timed during installation. The following step applies to earlier Stanadyne and to all Delphi/Lucas Pumps only.

IMPORTANT: Use the timing mark corresponding to the number of cylinders the engine has that is being timed.

b. **On earlier Stanadyne and all Delphi/Lucas rotary pumps:** Check injection pump gear timing with JD254A (JD-254A)[1] Timing Tool resting on nose of crankshaft and center of injection pump shaft. Timing mark (B) on injection pump drive gear, as described in table below, must align with timing tool (as shown).

INJECTION PUMP GEAR TIMING MARKS

Injection Pump Model	Timing Mark
Delphi/Lucas and Stanadyne 4-Cyl. Engine	4
Stanadyne 6-Cyl. Engine	S6
Delphi/Lucas 6-Cyl. Engine	L6
Delphi/Lucas (1st Production 1170 Combines)	L6
Delphi/Lucas (Early 1170 Combines)	6C
Delphi/Lucas (Late 1170 Combines)	6Z

IMPORTANT: To ensure proper lubrication of new upper idler gear bushing and camshaft bushing, install new upper idler gear with the reference number facing away from engine.

c. Lubricate upper idler gear bushing ID and shaft OD with TY6333 High-Temperature Grease. Using JDG791A Idler Gear Installer Pilot,[2] install idler gear without turning camshaft gear or injection pump gear.

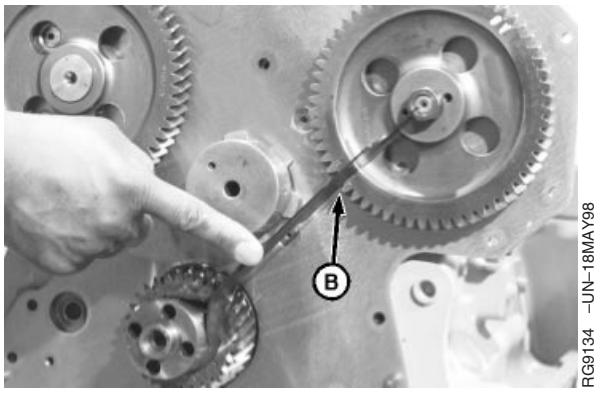

Setting Injection Pump Timing

RG7939 –UN–05JAN98

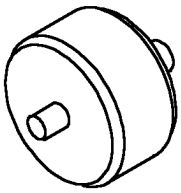

JDG791A

B—Timing Mark

[1]Order JD-254A when tool is ordered from European Parts Distribution Center (EPDC)

[2]JDG791A needs to be modified to allow space for the spring pin in idler shaft.

Continued on next page

RG19661,000001D –19–01JUL05–4/8

IMPORTANT: DO NOT use zinc coated hardware to retain idler gear. If cap screw is zinc coated, replace with new phosphate coated cap screw. See parts catalog for appropriate part number.

NOTE: Install outer thrust washer with "X" mark facing away from gear (early engines) or with notches facing toward gear (later engines).

d. Lubricate upper idler gear cap screw threads with oil. Install upper idler gear thrust washer and cap screw. Tighten cap screw to specifications.

Specification

Upper Idler Gear Cap Screw—
Torque ..... 70 N•m (53 lb-ft)

e. Recheck camshaft gear (A) and injection pump drive gear timing to make sure they are correct.

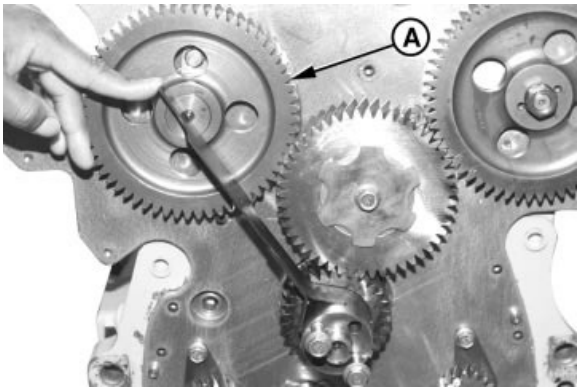

Rechecking Camshaft Timing

A—Camshaft Gear

Continued on next page

7. **On Four-Valve Head Engine:**

NOTE: Be sure crankshaft is at TDC compression stroke and timing pin is in position (see Step 1).

a. Align the fuel injection pump gear timing mark (I) to the twelve o'clock position.

b. Align "V 4Valve" or "V 4" timing mark (G) of camshaft gear with center of idler gear pin (C).

NOTE: Install inner and outer thrust washers with lubrication grooves facing toward idler gear.

c. Install rear thrust washer (B) onto pin (C) with lubrication grooves facing the idler gear.

d. Lubricate upper idler gear hub (A) ID and upper idler gear pin (C) OD with TY6333 High Temperature Grease.

e. Lubricate upper idler gear (D) ID and upper idler gear hub (A) OD with TY6333 High Temperature Grease. Install upper idler gear (D) onto upper idler gear hub (A).

A—Upper Idler Gear Hub
B—Rear Thrust Washer
C—Upper Idler Gear Hub Pin
D—Upper Idler Gear
E—Front Thrust Washer
F—Cap Screw
G—Camshaft Gear "V 4Valve" or "V 4" Timing Mark
H—Upper Idler Gear "V 4Valve" or "V 4" Timing Mark
I—Fuel Injection Pump Gear Timing Mark

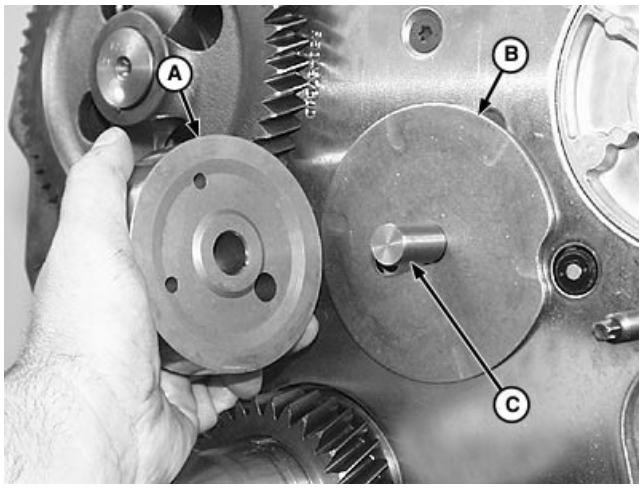

RG12440 –UN–02DEC03

Upper Idler Gear Thrust Washer and Hub (Four-Valve Head Engine)

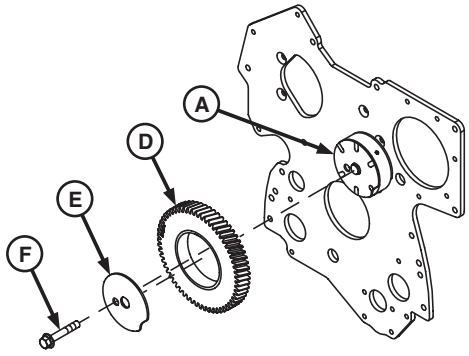

RG12433 –UN–02DEC03

Upper Idler Gear Assembly (Four-Valve Head Engine)

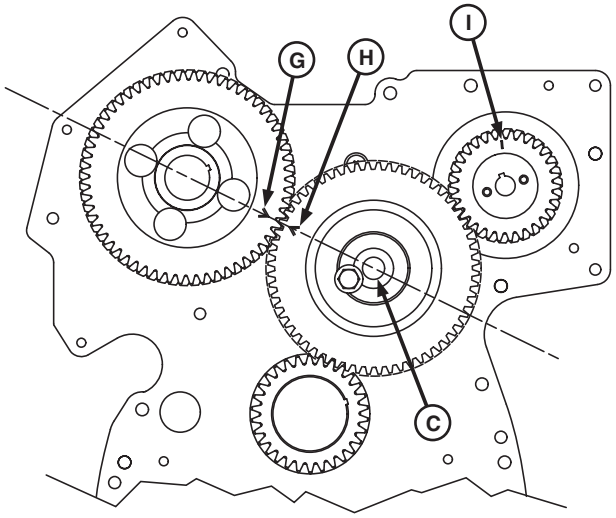

RG12434 –UN–02DEC03

Camshaft and Fuel Pump Timing (Four-Valve Head Engine)

Continued on next page

IMPORTANT: Gears must have “V 4Valve” or “V 4” marking. Use straight edge to align timing marks with shaft center lines.

f. Install upper idler gear hub and idler gear with timing ribs toward the front plate onto idler gear pin (C). Using straightedge, align camshaft gear “V 4Valve” or “V 4” timing mark (G) with upper idler gear “V 4Valve” or “V 4” timing mark (H). The “V” timing marks must be facing each other and in line with the centerline of the camshaft gear and the upper idler gear.

RG19661,000001D –19–01JUL05–7/8

g. Install upper idler gear front thrust washer (C) with lubrication grooves facing toward gear.

IMPORTANT: DO NOT use zinc coated hardware to retain idler gear. If cap screw is zinc coated, replace with new phosphate coated cap screw. See parts catalog for appropriate part number.

h. Lubricate upper idler gear cap screw (F) threads with oil. Tighten cap screw to specifications.

Specification	
Upper Idler Gear Cap Screw— Torque	70 N•m (53 lb-ft)

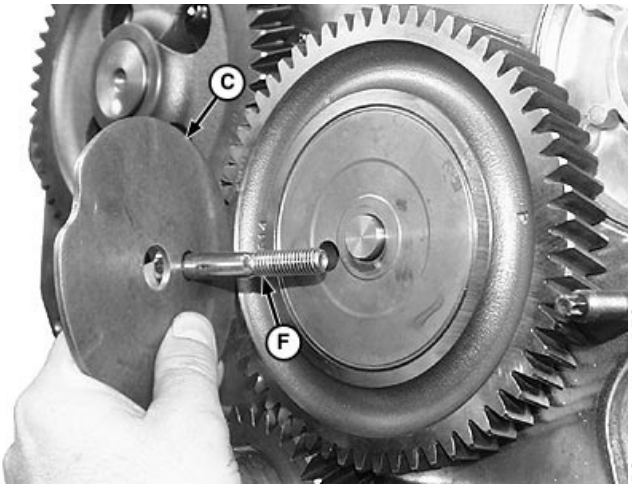

Idler Gear Outer Thrust Washer and Cap Screw

8. **On All Engines:** install timing wheel, if equipped. (See REMOVE AND INSTALL CRANKSHAFT TIMING WHEEL (TWO-VALVE HEAD ENGINES WITH VP44 OR DE10 INJECTION PUMP AND ALL FOUR-VALVE HEAD ENGINES) in Group 040.)

RG19661,000001D –19–01JUL05–8/8

Clean and Inspect Timing Gear Cover

1. Drive crankshaft front oil seal out of cover on engines not using a unitized front seal.
2. Remove material and sealant from cylinder block and timing gear cover gasket surfaces. If necessary, remove oil filler neck and gasket and injection pump drive gear nut cover plate and gasket.

CAUTION: Do not spin bearings when drying with compressed air.

3. If engine is equipped with the auxiliary drive, remove auxiliary drive as described earlier in this group.
4. If engine is equipped with electronic tachometer (magnetic pick-up) sensor, remove sensor and O-ring. (See REMOVE AND INSTALL MAGNETIC PICK-UP SENSOR, as described in this group.)
5. Clean timing gear cover in solvent. Dry with compressed air.
6. Inspect cover for cracks or damage. Make sure seal bore is clean and free of nicks.

RG,16,DT7472 –19–14NOV97–1/1

Install Timing Gear Cover

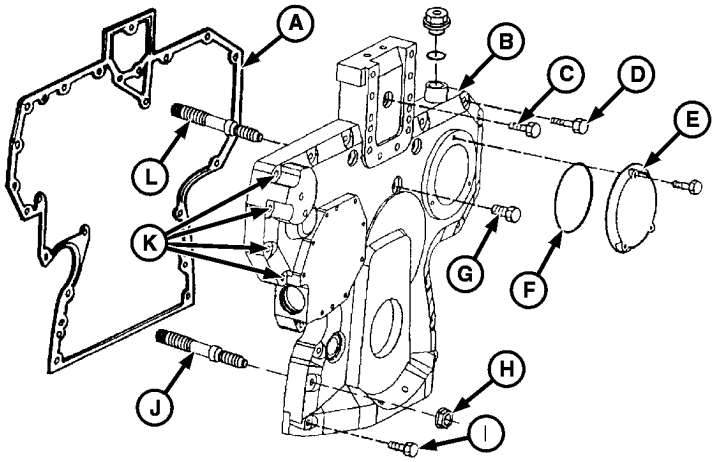

RG10385 –UN–19NOV99

Timing Gear Cover (Two-Valve Head Engine Shown)

A—Cover Gasket
B—Timing Gear Cover
C—Cap Screw (Two-Valve Head Engine)
D—Cap Screw
E—Injection Pump Drive Gear Cover Plate (Two-Valve Head Engine)
F—O-Ring (Two-Valve Head)
G—Cap Screw (Two-Valve Head Engine)
H—Flange Nut
I—Cap Screw
J—Stud
K—Stud Locations (Some OEM Applications Only)
L—Stud[1]

NOTE: Two-valve head engine is shown. Cap screws and studs for four-valve head engine are similar for installation.

1. Make sure gasket surfaces on cover and front plate are clean. See CLEAN AND INSPECT FRONT PLATE, earlier in this group.
2. Install timing gear. (See REPLACE FRONT CRANKSHAFT OIL SEAL AND WEAR SLEEVE in Group 040.)

NOTE: On some OEM engine applications, cap screws in location (K) are replaced by studs with nuts to prevent interference with auxiliary driven hydraulic pump. Apply LOCTITE® 271 Thread Lock and Sealer (High Strength) to studs. Install studs in front plate and wait two hours before installing timing gear cover. Studs must not protrude from front plate.

3. Apply a thin coat of oil to ID of crankshaft seal if installed. Install timing gear cover (B) on engine.
4. **On Two-Valve Head Engine:** Apply LOCTITE® 592 (TY9375) Pipe Sealant to cap screw (G).

LOCTITE is a registered trademark of Loctite Corp.

[1] Serial Numbers: Dubuque-built engines (703905—), Saran-built engines (516218—), Torreon-built engines (001000—).

Continued on next page

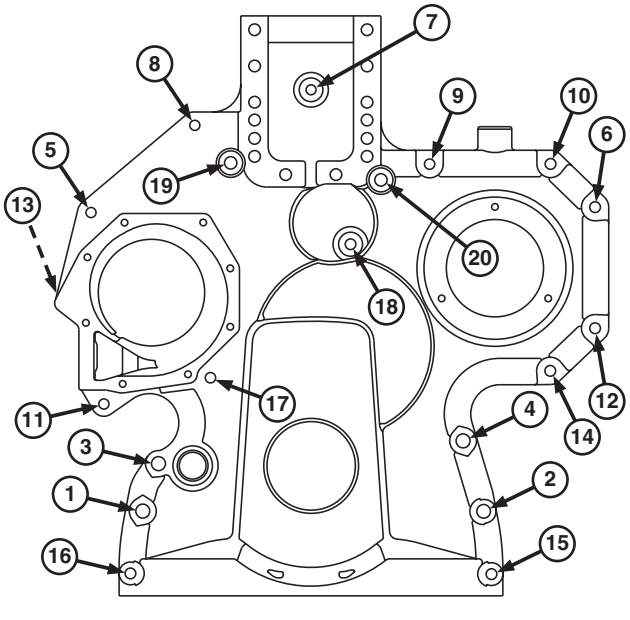

Two-Valve Head Engines Without PTO

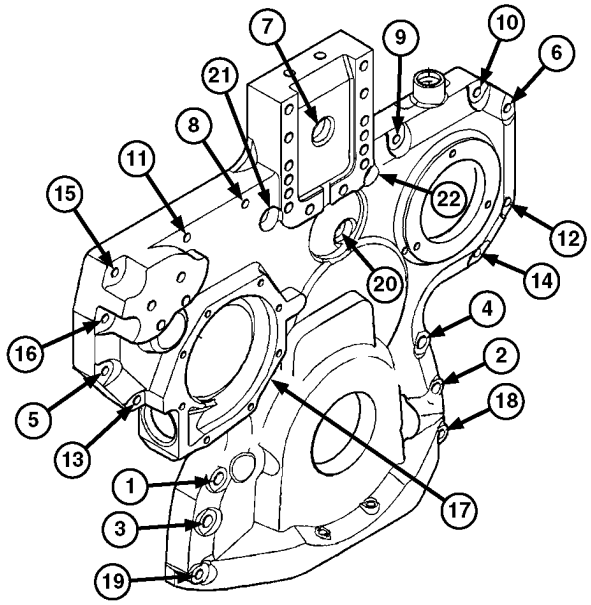

Two-Valve Head Engines With PTO

5. Tighten all cap screws and nuts to initial torque, following the sequence shown for the appropriate cover type. Finally, tighten all cap screws and nuts to final torque following the same sequence.

Specification	
Timing Gear Cover-to-Front Plate and Cylinder Block Cap Screws and Nuts - Initial Torque—Torque	20 N•m (177 lb-in.)
Oil Pan-to-Timing Gear Cover - Initial Torque—Torque	20 N•m (177 lb-in.)
Timing Gear Cover-to-Front Plate and Cylinder Block Cap Screws and Nuts - Final Torque—Torque	35 N•m (26 lb-ft)
Oil Pan-to-Timing Gear Cover - Final Torque—Torque	35 N•m (26 lb-ft)

NOTE: If engine is equipped with front oil fill, install in place of cover plate (E).

6. **On Two-Valve Head Engine:** Install injection pump drive gear cover plate (E) or front oil fill (if equipped) using a new O-ring (F), if necessary. Apply LOCTITE® 242 (T43512) Thread Lock and Sealer (Medium Strength) to cap screws on rotary injection pump covers. Tighten screws to specifications.

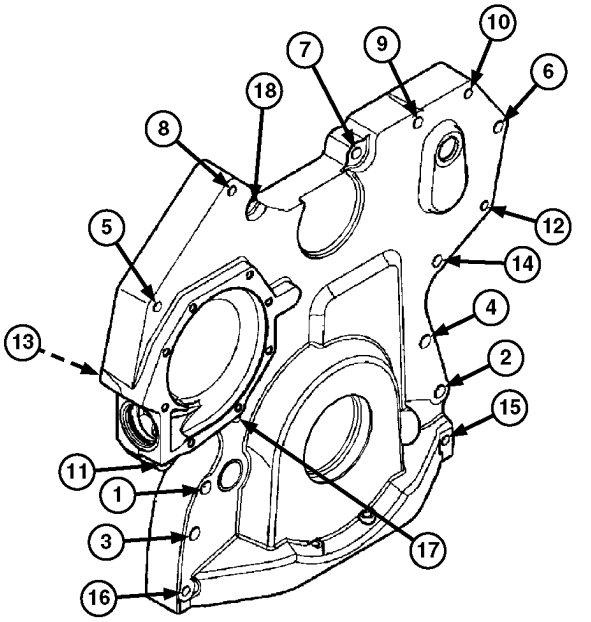

Four-Valve Head Engines

LOCTITE is a registered trademark of Loctite Corp.

Continued on next page

RG,16,DT7471 –19–24NOV03–2/6

Specification	
Injection Pump Drive Gear Cover—Torque	6 N•m (4.5 lb-ft) (53 lb-in.)

7. **On Four-Valve Head Engine:** Install timing gear cover plug, using a new O-ring, in front of fuel pump to specifications.

Specification	
Timing Gear Cover Plug—Torque	50 N•m (37 lb-ft)

8. If equipped with spring, plunger and seat type oil pressure regulating valve, install oil pressure regulating valve assembly. (See REMOVE AND INSTALL OIL PRESSURE REGULATING VALVE AND SEAT in Group 060.)

RG,16,DT7471 –19–24NOV03–3/6

9. Install adjustable fan drive and fan pulley (B). (See INSTALL FAN DRIVE ASSEMBLY in Group 070.)

10. Install water pump, if removed. (See INSTALL WATER PUMP in Group 070.)

B—Fan Pulley

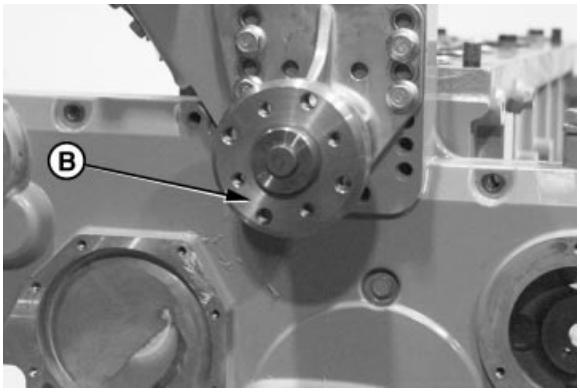

Adjustable Fan Drive Assembly (Two-Valve Head Engine Shown)

Continued on next page

RG,16,DT7471 –19–24NOV03–4/6

11. Install belt tensioner (A), if removed. (See REMOVE AND INSTALL AUTOMATIC (SPRING) BELT TENSIONER in Group 070.)

A—Belt Tensioner

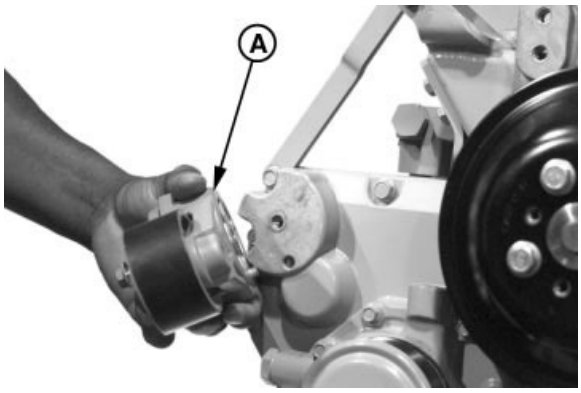

Fan Tensioner (Two-Valve Head Engine Shown)

RG,16,DT7471 –19–24NOV03–5/6

12. Install oil cooler-to-water manifold elbow (B) at front plate. (See REMOVE, INSPECT, AND INSTALL OIL COOLER in Group 060.)

13. Install oil pan. (See INSTALL OIL PAN in Group 060.)

14. Install front crankshaft oil seal and wear sleeve. (See REPLACE FRONT CRANKSHAFT OIL SEAL AND WEAR SLEEVE in Group 040.)

B—Oil Cooler-to-Water Manifold Elbow

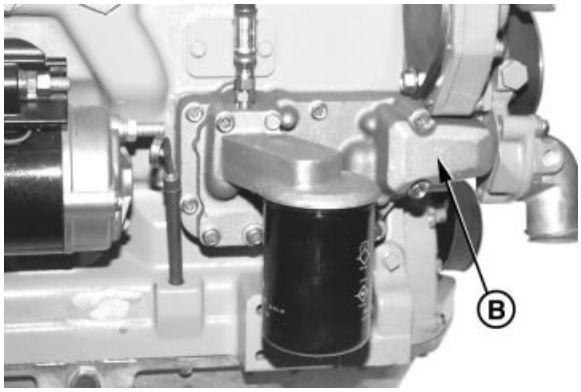

Oil Cooler-to-Water Manifold Elbow (Two-Valve Head Engine Shown)

RG,16,DT7471 –19–24NOV03–6/6

Remove and Install Magnetic Pick-Up Sensor

1. Disconnect wiring connector and remove magnetic pick-up. Discard O-ring.
2. Replace magnetic pick-up as required.
3. Install magnetic pick-up with a new O-ring and tighten to specifications.

Specification	
Fuel Injection Gear Magnetic Pick-Up Sensor—Torque	15 N•m (133 lb-in.)
Crankshaft Timing Wheel Magnetic Pick-Up Sensor—Torque	15 N•m (133 lb-in.)

4. Install electrical connector.

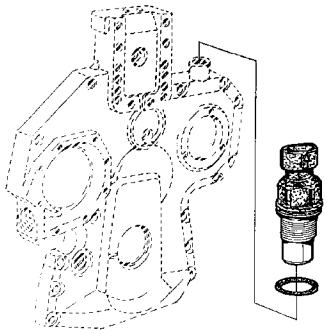

RG10551 –UN–02DEC99

Fuel Injection Gear Magnetic Pick-Up Sensor



RG11792 –UN–27SEP01

Crankshaft Timing Wheel Magnetic Pick-Up Sensor

DPSG,OUO1004,1179 –19–15DEC03–1/1

Complete Final Assembly

1. Install crankshaft pulley or damper. (See INSTALL PULLEY OR VIBRATION DAMPER AND PULLEY in Group 040.)
2. Install fuel supply pump. See INSTALL LUCAS AND STANADYNE FUEL SUPPLY PUMP, INSTALL DENSO IN-LINE FUEL SUPPLY PUMP, or INSTALL MOTORPAL FUEL SUPPLY PUMP in Section 02, Group 090 of CTM207 (Mechanical Fuel Systems). See INSTALL MECHANICAL FUEL TRANSFER PUMP or REMOVE AND INSTALL ELECTRONIC FUEL TRANSFER PUMP in CTM220 (Level 11 Electronic Fuel Systems with Denso High Pressure Common Rail). See INSTALL FUEL SUPPLY PUMP in CTM331 (Level 12 Electronic Fuel Systems).
3. Remove camshaft follower holding tools (if used for camshaft removal).
4. Install push rods and rocker arm assembly. (See INSTALL ROCKER ARM ASSEMBLY in Group 020 or 021.)
5. Adjust valve clearance. (See CHECK AND ADJUST VALVE CLEARANCE in Group 020.) Install rocker arm cover and sealing ring. (See INSTALL ROCKER ARM COVER in Group 020.)
6. Install fan. (See INSPECT AND INSTALL FAN ASSEMBLY in Group 070.)
7. Install alternator. (See REMOVE AND INSTALL ALTERNATOR in Group 100.)
8. Fill engine crankcase with clean oil having correct viscosity and grade specifications. (See Section 01, Group 002.)
9. Perform engine break-in. (See PERFORM ENGINE BREAK-IN in Group 010.)

RG,16,DT7469 –19–03JUN02–1/1

General Lubrication System Information

The oil filter can be located on right side of the engine or remotely located on left side. The oil filter may be a standard type or an extended-life filter assembly for Tier 2 engines.

Dipsticks and oil fill locations can be located on either side of the engine. The oil fill can also be located on the rocker arm cover or mounted to the timing gear cover.

The pressure regulating valve and the bypass valve are located in the front face of the block. On early engines, two regulating valve springs are available: one for 4-cylinder engines and one for 6-cylinder engines. Later engines use the same one-piece cartridge type regulating valve for 4- and 6-cylinders engines.

Oil coolers are full-flow, plate-type coolers. They may be equipped with 3, 5, 7, or 9 plates.

One oil pump is available and is used on both 4- and 6-cylinder engines.

NOTE: For lubrication system diagnostics, see 4.5L/6.8L - L1 - EXCESSIVE OIL CONSUMPTION in Section 04, Group 150.

RG,20,DT7533 –19–26NOV03–1/1

Remove, Inspect, and Install Oil Filter Base

Several oil filter locations are available. Two versions are being shown in this procedure.

1. Disconnect turbocharger oil inlet line (A) from oil filter header.
2. On left hand and remote mount filters, disconnect oil inlet and outlet lines.

A—Turbocharger Oil Inlet Line

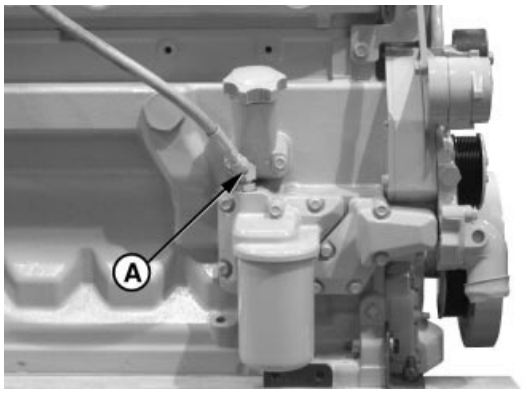

RG7962A –UN–13NOV97

Turbocharger Oil Inlet Line

Continued on next page

RG19661,0000010 –19–16JUN05–1/7

3. Remove oil filter (B or C) using a suitable filter wrench.

B—Standard Oil Filter
C—Extended-Life Oil Filter

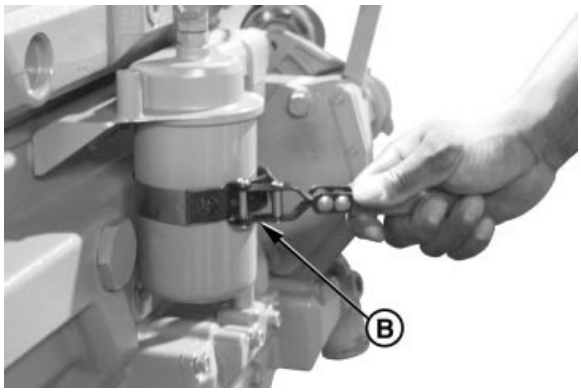

RG7961 –UN–13NOV97

Standard Oil Filter



RG12032 –UN–03JAN02

Extended-Life Oil Filter

Continued on next page

RG19661,0000010 –19–16JUN05–2/7

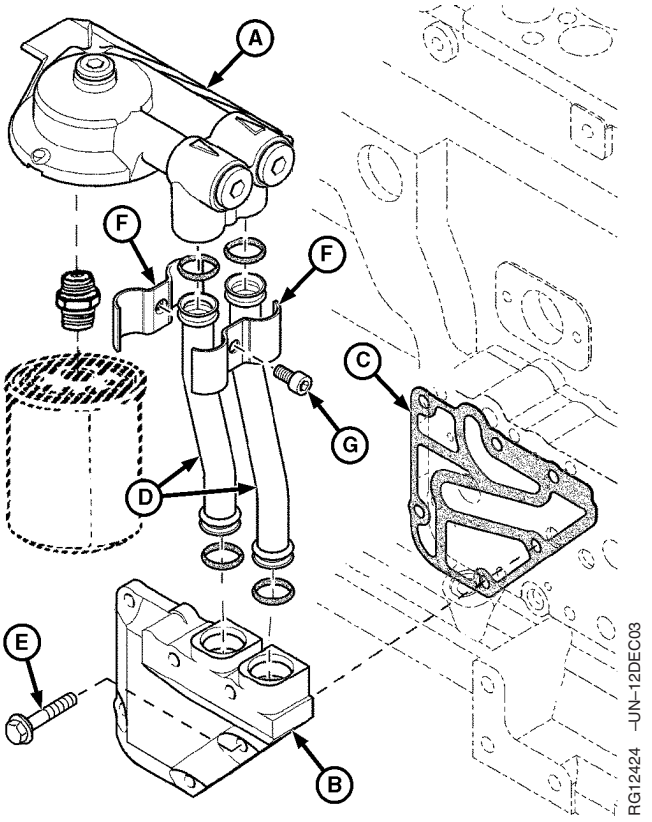

Later Engines

4. Remove oil filter header (on left-hand and remote mount filters) or header/rear adapter (A).

5. Remove oil tube adapter/oil cooler cover (B) and remove tubes (D), if equipped.

6. Clean all gasket material from mating surfaces.

7. **On engines with extended-life filter option:** Check filter bypass valve spring using a clean wooden dowel to push up on the plastic portion of the valve to ensure the valve moves freely and there is no obvious damage. Replace valve if required. (See REMOVE, INSPECT, AND INSTALL OIL BYPASS VALVE in this group.)

A—Oil Filter Header/Rear Adapter
B—Oil Tube Adapter/Oil Cooler Cover
C—Gasket
D—Oil Tubes
E—Cap Screw
F—Clamp Halves (2 used)
G—Cap Screw

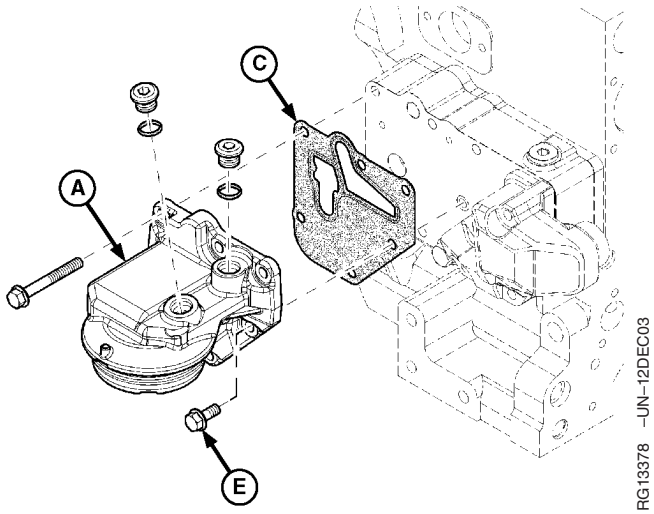

Extended Life Filter Housing

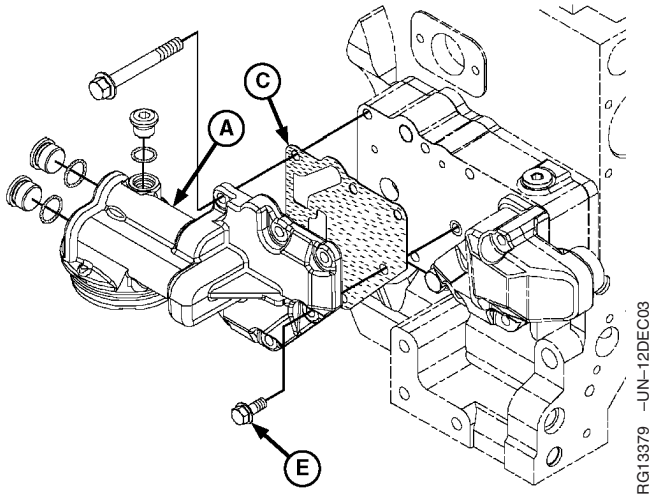

Extended Life Filter Housing

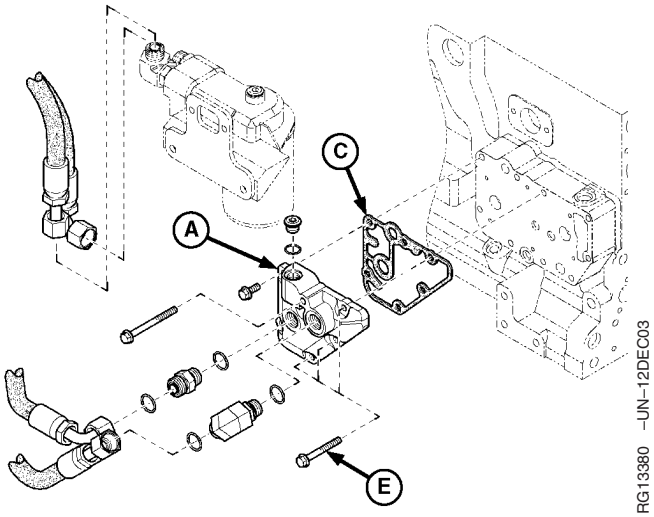

Remote Mounted Filter Housing

Continued on next page

8. Inspect all parts and replace if needed.

NOTE: On early engines, O-rings for tubes (D) are installed in grooves of adapter (B). Later engines are equipped with beaded tubes (D) which retain the O-rings. Note position on these tubes for assembly in the same position.

9. Install new gasket and O-rings (if required) and install oil filter header/rear adapter (A) or remote filter header to bracket. Tighten cap screws to specifications.

Specification	
Oil Filter Header Cap Screws (High, Front and Rear Mounted)—Torque	35 N•m (26 lb-ft)
Oil Filter Header-to-Bracket Cap Screws (Left-Hand and Remote Mounted)—Torque	73 N•m (54 lb-ft)

10. Using a new gasket and O-rings, install adapter (B) and tubes (D) on high, front and rear mount assemblies. Apply LOCTITE® 242 Thread Lock and Sealer (Medium Strength) to short cap screw (E) for open hole in oil cooler. Tighten all cap screws to specifications.

Specification	
Oil Cooler Cover Cap Screw—Torque	35 N•m (26 lb-ft)

11. Place clamp halves (F) on each side of the upper straight sections of oil tubes as shown.

12. Apply LOCTITE® 242 Thread Lock and Sealer (Medium Strength) to threads of cap screw (G) and tighten to specification.

Specification	
Oil Line Clamp Cap Screw—Torque	10 N•m (88 lb-in.)

13. On left hand and remote mount filters, connect oil inlet and outlet lines. Tighten line end nuts to specifications.

LOCTITE is a registered trademark of the Loctite Corp.

Continued on next page

Specification	
Remote Oil Filter Line End Nuts—Torque	66 N•m (49 lb-ft)

IMPORTANT: Ensure oil inlet and outlet lines are properly clamped and protected to prevent excessive motion or abrasion.

RG19661,0000010 –19–16JUN05–5/7

14. Connect turbocharger oil inlet line (C) and tighten to specifications.

Specification	
Turbocharger Oil Inlet Line—Torque	24 N•m (212 lb-in.)

A—Oil Filter Header/Rear Adapter
B—Oil Tube Adapter/Oil Cooler Cover
C—Turbocharger Oil Inlet Line
D—Oil Tubes
E—Cap Screw

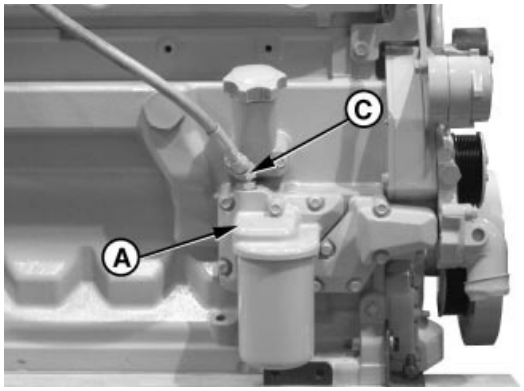

RG7962B –UN–13NOV97

Filter Header (Front Mount)

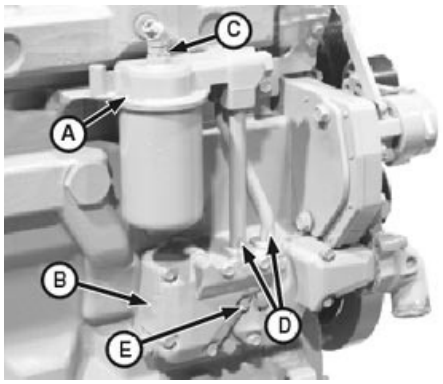

RG10373 –UN–04OCT99

Filter Adapters (High Mount)

Continued on next page

RG19661,0000010 –19–16JUN05–6/7

15. **On engines with standard filter option:** Spread a layer of clean engine oil on new filter seal. Install filter and tighten until packing contacts filter base. Tighten an additional 1/2—3/4 turn after packing contacts base. DO NOT overtighten oil filter.

IMPORTANT: DO NOT use filter wrench to install filter. Install filter by hand only.

On extended life oil filters, ensure that tabs (C) of dust seal are properly installed in the slots of housing before installing filter.

On engines with extended-life filter option: Apply clean engine oil to the inner (B) and outer (A) seal and filter threads. Wipe both sealing surfaces (D and E) of the header with a clean rag. *Ensure that dust seal (C) is in place on header, and that tabs on seal are in line with slots on header.* Replace seal if damaged. Install and tighten oil filter by hand until firmly against dust seal. DO NOT apply an extra 1/2—3/4 turn after seal contact as done with other filters.

A—Outer Seal
B—Inner Seal
C—Dust Seal
D—Outer Seal Surface
E—Inner Seal Surface

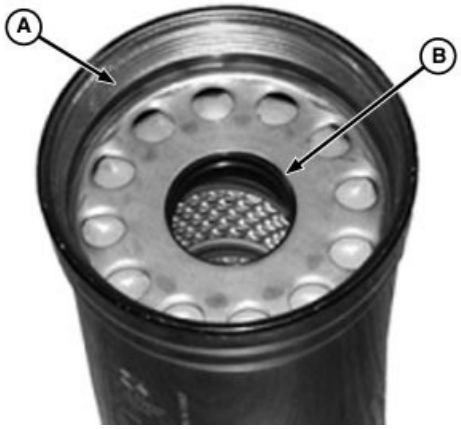

RG13381 –UN–12DEC03

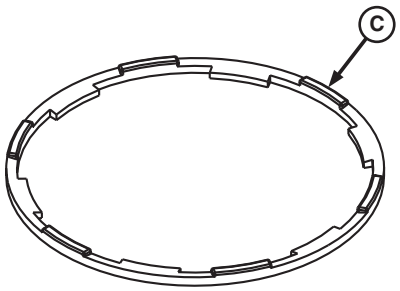

RG12425 –UN–12DEC03

Oil Filter Dust Seal

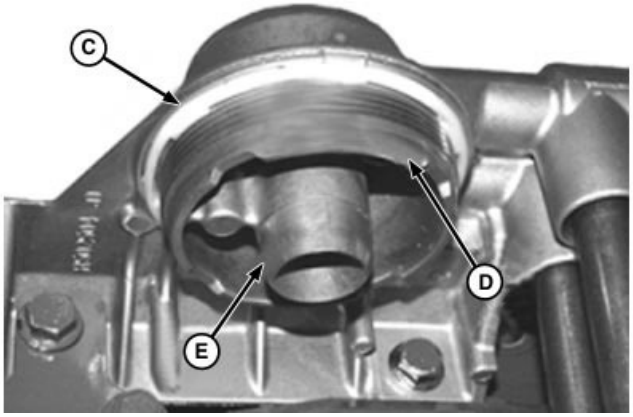

RG13382 –UN–12DEC03

RG19661,0000010 –19–16JUN05–7/7

Remove, Inspect, and Install Oil Cooler

Remove Oil Cooler Assembly

1. Remove oil cooler drain plug (E) and drain coolant.
2. On high mount, rear and front mount oil filters, remove oil filter header with tubes and adapter/cooler cover, if equipped. (See REMOVE, INSPECT, AND INSTALL OIL FILTER BASE, in this group.)
3. On left hand or remote oil filters, disconnect oil lines (A) and (B) and remove cooler cover (C).
4. If equipped, disconnect line from top of oil cooler housing.
5. Remove elbow adapter (D).
6. Remove housing (F).
7. Remove oil cooler (G).

A—To Oil Filter Inlet (Dirty Oil)
B—From Oil Filter Outlet (Clean Oil)
C—Cover
D—Adapter
E—Oil Drain Plug
F—Oil Cooler Housing
G—Oil Cooler

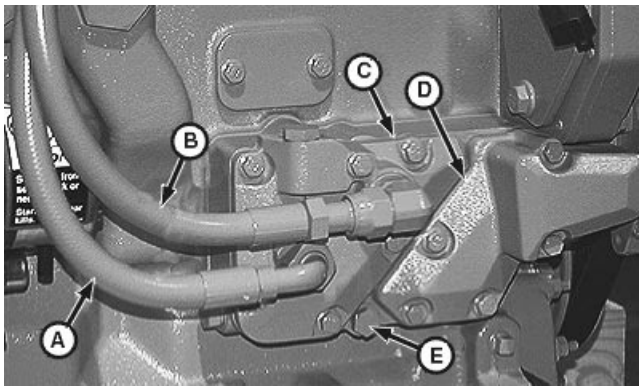

RG10361 –UN–14MAY02

Oil Cooler Assembly (Remote Filter Application Shown)

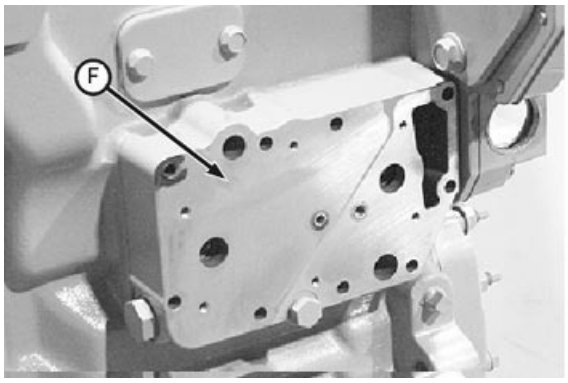

RG10362 –UN–04OCT99

Oil Cooler Housing

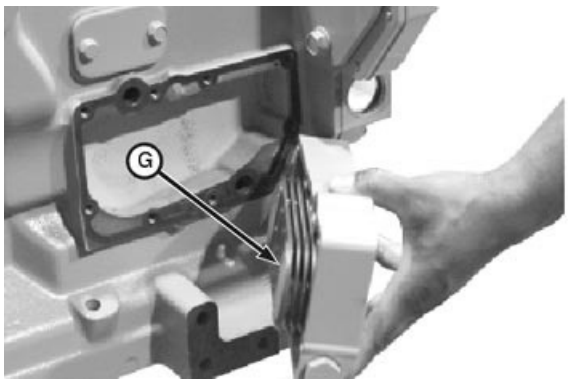

RG10363 –UN–04OCT99

Oil Cooler

Continued on next page

RG,20,DT7531 –19–19NOV03–1/8

Inspect Oil Cooler Assembly

1. Inspect oil cooler (A) (shown installed in housing) for physical damage, plugging, or leakage which may allow mixing of oil and coolant.
2. Back flush oil cooler to clean all debris from core.
3. Pressure test oil cooler in liquid and compressed air if mixing of oil and coolant is suspected.

   Oil cooler should show no leakage when 140—170 kPa (1.4—1.7 bar) (20—25 psi) air pressure is applied for a minimum of 30 seconds.

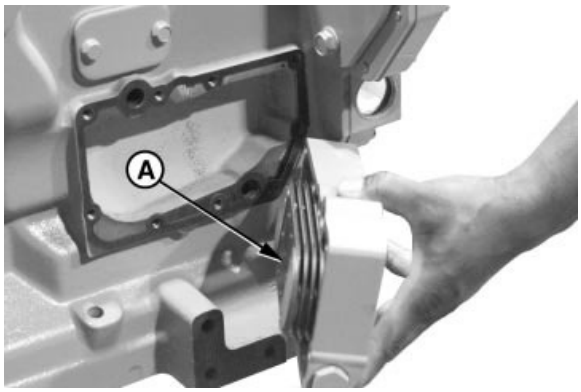

RG7592B –UN–05JAN98

Oil Cooler

A—Oil Cooler

RG,20,DT7531 –19–19NOV03–2/8

4. Inspect oil cooler housing (B).

NOTE: Service oil cooler housings have a 3.5 mm (0.138 in.) O-ring groove width. Older housings had a 4.5 mm (0.177 in.) groove width. Check O-ring grooves for latest width specification and replace if necessary.

5. Remove O-rings (C) and inspect surface finish of O-ring grooves. If there are ridges discernible with a fingernail, replace oil cooler housing. Additionally, if there is porosity in grooves larger than 0.5 mm (0.20 in.), replace housing.
6. Replace parts as needed. DO NOT attempt to repair oil cooler.

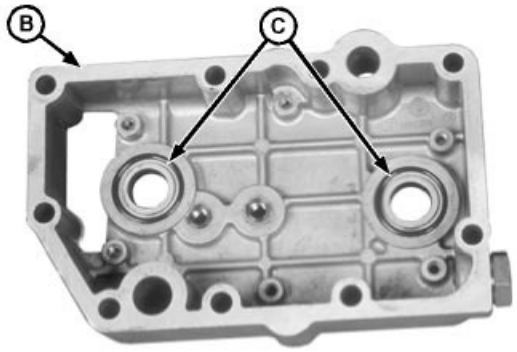

RG9085 –UN–16MAR98

Oil Cooler Housing

B—Oil Cooler Housing
C—O-Rings

Continued on next page

RG,20,DT7531 –19–19NOV03–3/8

Install Oil Cooler Assembly

1. Lubricate new O-rings with clean engine oil.
2. Install oil cooler (A) in oil cooler housing (B).
3. Apply LOCTITE® 242 Thread Lock and Sealer (Medium Strength) to six Allen head cap screws and install oil cooler in housing. Tighten all cap screws by hand, then tighten to the following specifications in sequence shown.

Specification

Oil Cooler-to-Housing Allen Head Cap Screws—Torque ..... 12 N•m (106 lb-in.)

A—Oil Cooler
B—Oil Cooler Housing

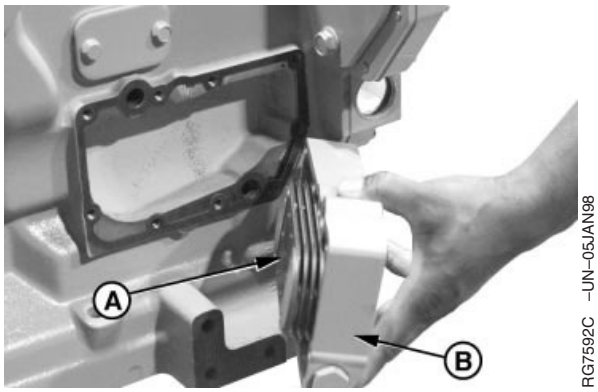

RG7592C –UN–05JAN98

Oil Cooler and Housing

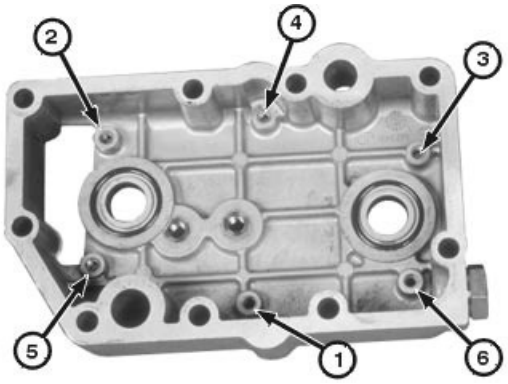

RG10377 –UN–12OCT99

Oil Cooler Torque Sequence

LOCTITE is a registered trademark of the Loctite Corp.

Continued on next page

RG,20,DT7531 –19–19NOV03–4/8

4. **On high mount, rear and front mount applications:** Use new gaskets and install oil cooler assembly. Be sure gasket is properly aligned with cap screw holes.

NOTE: On some engines, tube (D) is part of elbow adapter (A) and O-ring (E) is not used.

Ensure that O-ring (C) is properly installed in groove in coolant port of timing gear cover.

5. Install gasket (B), O-rings (C and E), tube (D) and elbow adapter (A). Install cap screws (F and G) to attach elbow adapter to engine. Tighten cap screws to specification.

Specification	
Oil Cooler Elbow Adapter Cap Screws—Torque	35 N•m (26 lb-ft)

6. If equipped, install line fitting on top of oil cooler housing and tighten to specification. Install new O-ring and connect oil line to fitting and tighten to specification.

Specification	
Line Fitting on Top of Oil Cooler Housing—Torque	50 N •m (37 lb-ft)
Oil Line Clamp on Top of Oil Cooler Housing—Torque	7 N •m (62 lb-in.)

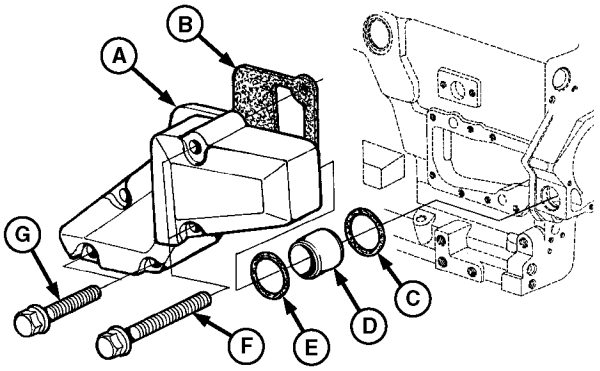

RG11787 –UN–20SEP01

Elbow Adapter

A—Elbow Adapter
B—Gasket
C—O-Ring
D—Tube
E—O-Ring
F—Cap Screw
G—Cap Screw

Continued on next page

RG,20,DT7531 –19–19NOV03–5/8

NOTE: Refer to Parts Catalog for appropriate replacement parts as necessary.

7. Install parts (A, B, D, E and F). (See REMOVE, INSPECT AND INSTALL OIL FILTER BASE in this group.)

8. Apply LOCTITE® 242 Thread Lock and Sealer (Medium Strength) to cap screw (G) and install. Tighten cap screws (D and G) to specification.

Specification

Oil Cooler Cover Cap Screws—Torque ..... 35 N•m (26 lb-ft)

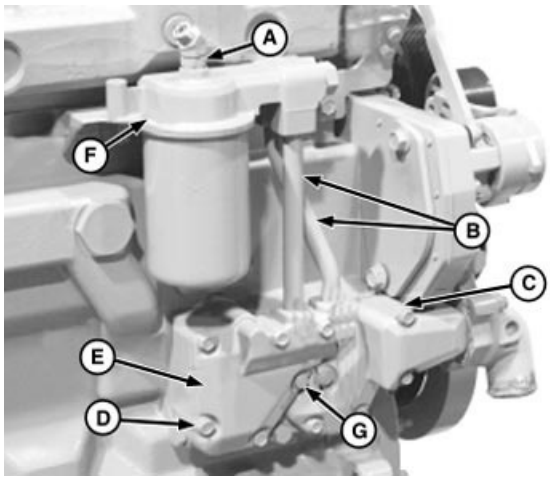

RG13622A –UN–17MAY04

Oil Filter Base and Oil Cooler Cover Installation

A—Turbocharger Oil Inlet Line
B—Tubes
C—Elbow Adapter
D—Cap Screw (5 used)
E—Oil Tube Adapter/Oil Cooler Cover
F—Oil Filter Header/Rear Adapter
G—Cap Screw

LOCTITE is a registered trademark of the Loctite Corp.

RG,20,DT7531 –19–19NOV03–6/8

9. **On left hand or remote filter applications:** Use new gaskets and install oil cooler assembly. Be sure gasket is properly aligned with cap screw holes.

NOTE: On some engines, tube (D) is part of elbow adapter (A) and O-ring (E) is not used.

Ensure that O-ring (C) is properly installed in groove in coolant port of timing gear cover.

10. Install gasket (B), O-rings (C and E), tube (D) and elbow adapter (A). Install cap screws (F and G) to attach elbow adapter to engine. Tighten cap screws to specification.

Specification

Oil Cooler Elbow Adapter Cap Screws—Torque ..... 35 N•m (26 lb-ft)

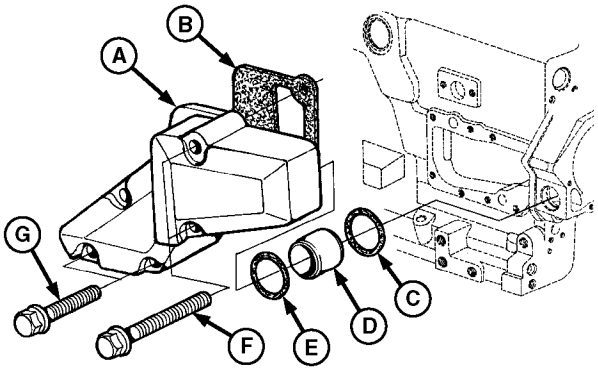

RG11787 –UN–20SEP01

Elbow Adapter

A—Elbow Adapter
B—Gasket
C—O-Ring
D—Tube
E—O-Ring
F—Cap Screw
G—Cap Screw

Continued on next page

RG,20,DT7531 –19–19NOV03–7/8

11. Install oil cooler cover (C).

12. Apply LOCTITE® 242 Thread Lock and Sealer (Medium Strength) to cap screws (E) and install. Tighten cap screws to specifications.

Specification

Oil Cooler Cover Cap Screws—Torque ..... 35 N•m (26 lb-ft)

13. If equipped, install line fitting on top of oil cooler housing and tighten to specification. Install new O-ring and connect oil line to fitting and tighten to specification.

Specification

Line Fitting on Top of Oil Cooler Housing—Torque..... 50 N •m (37 lb-ft)
Oil Line Clamp on Top of Oil Cooler Housing—Torque..... 7 N •m (62 lb-in.)

14. Connect lines (A) and (B) and tighten to specifications.

Specification

Oil Cooler Line End Nuts (Remote Filter Applications)—Torque ..... 66 N•m (49 lb-ft)

15. **For all applications:** Install oil cooler drain plug (F) and tighten to specifications.

Specification

Oil Cooler Drain Plug—Torque ..... 5 N•m (44 lb-in.)

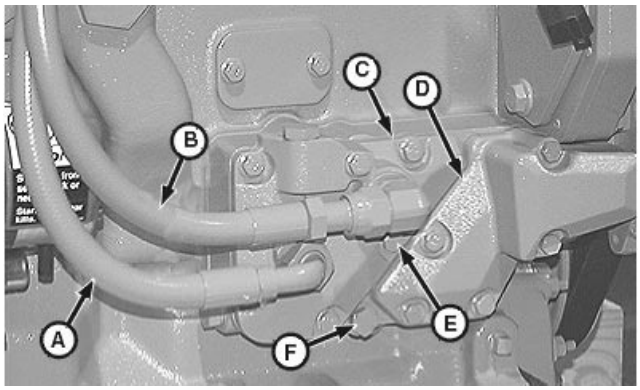

RG11810 –UN–17JUN02

Oil Cooler Cover Installation

A—To Oil Filter Inlet (Dirty Oil)
B—From Oil Filter Outlet (Clean Oil)
C—Oil Cooler Cover
D—Elbow Adapter
E—Cap Screw
F—Drain Plug

LOCTITE is a registered trademark of the Loctite Corp.

RG,20,DT7531 –19–19NOV03–8/8

Remove, Inspect, and Install Oil Bypass Valve

1. Remove timing gear cover and front plate. (See REMOVE TIMING GEAR COVER in Group 050. See REMOVE CYLINDER BLOCK FRONT PLATE in Group 050.)
2. Remove oil bypass valve and spring.
3. Inspect valve and spring for damage. Replace parts if necessary.
4. Check bypass valve spring free length and compression strength using D01168AA Spring Compression Tester. Replace parts if not within specification.

Specification

Oil Bypass Valve Springs—Free Length	51 mm (2.00 in.)
Spring Load at 29 mm (1.14 in.) Compressed Length	87.8 N (20 lb-force)

5. Install oil bypass valve and spring in cylinder block.
6. Install front plate and timing gear cover. (See INSTALL TIMING GEAR COVER in Group 050. See INSTALL CYLINDER BLOCK FRONT PLATE in Group 050.)



RG7571 –UN–23NOV97

Oil Bypass Valve and Spring

RG,20,DT7530 –19–17NOV97–1/1

Remove and Install Oil Filter Bypass Valve (Extended-Life Filter)

NOTE: Bypass valve MUST be replaced any time damage is noticed or it is removed from filter base.

1. Remove oil filter base. (See REMOVE, INSPECT, AND INSTALL OIL FILTER BASE in this group.)

NOTE: Valve plunger will need to be slightly compressed to insert puller.

2. Remove bypass valve (A) from filter base (B) using D01061AA Blind-Hole Puller Set, or equivalent blind hole puller.
3. Clean filter base and inspect for damage. Replace if necessary.
4. Press in new bypass valve until seated using an appropriate arbor.

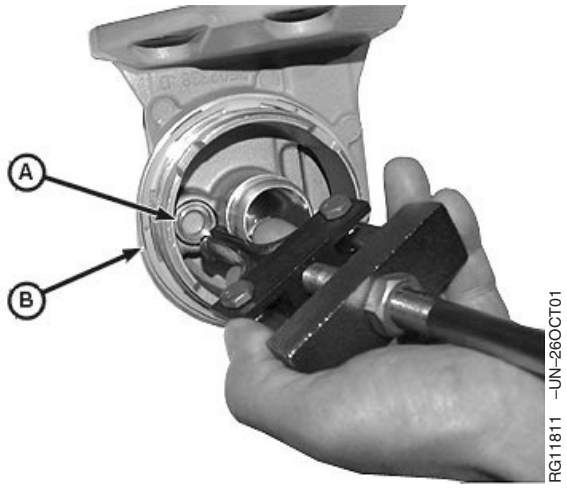

Remove Oil Filter Bypass Valve

A—Oil Filter Bypass Valve
B—Oil Filter Base

OUO1082,000021D –19–26SEP01–1/1

Remove and Install Oil Pressure Regulating Valve

NOTE: On earlier engines, the oil pressure regulating valve, spring and seat are separate parts located under a plug on the timing gear cover.

On later engines, the oil pressure regulating valve is a one-piece cartridge. No valve seat is used. There is no access plug on the timing gear cover. Note that the timing gear cover must be removed to access this valve.

Refer to the appropriate following procedures.

Remove and Install Oil Pressure Regulating Valve and Seat (Earlier Engines)

1. Remove oil pressure regulating valve plug from timing gear cover.

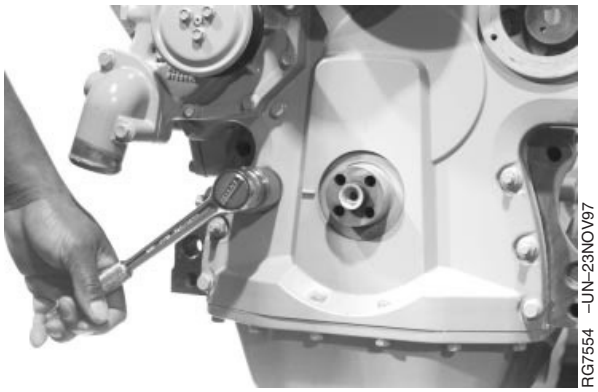

Remove Oil Pressure Regulating Valve Plug (Earlier Engines)

Continued on next page

RG,20,DT7529 –19–10DEC03–1/8

2. Remove oil pressure regulating valve and spring.

3. Check valve cone for excessive wear and damaged sealing face.

NOTE: When ordering early style oil pressure regulating valve parts, they may be substituted with a later cartridge style oil pressure regulating valve as it becomes available for service. (See REMOVE AND INSTALL OIL PRESSURE REGULATING VALVE (LATER ENGINES) in this procedure for installation.)

4. Check oil pressure regulating spring free length and compression strength using D01168AA Spring Compression Tester. Replace parts if not within specification.

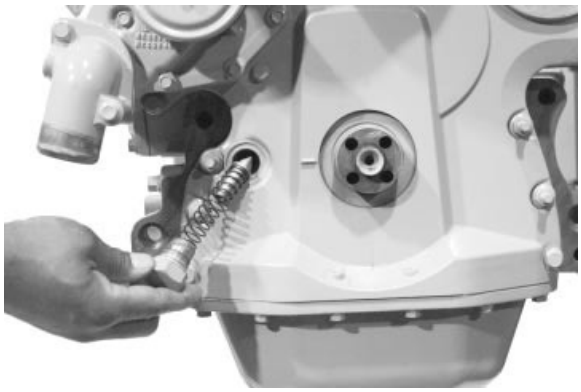

Oil Pressure Regulating Valve and Spring (Earlier Engines)

Oil Pressure Regulating Valve Spring Specifications—	Specification
4-Cylinder Engines (Except for Saran Engines Listed Below)—Spring Free Length	115.5 mm (4.55 in.)
4-Cylinder Engines (Except for Saran Engines Listed Below)—Spring Load at 42.5 mm (1.68 in.)	40.5—49.4 N (9.1—11.1 lb-force)
6-Cylinder Engines and CD4045HF157/158, CD4045TF157/158 and CD4045TF257/258—Spring Free Length	119 mm (4.68 in.)
6-Cylinder Engines and CD4045HF157/158, CD4045TF157/158 and CD4045TF257/258—Spring Load at 42.5 mm (1.68 in.)	60.1—73.4 N (13.5—16.5 lb-force)

Continued on next page

RG,20,DT7529 –19–10DEC03–2/8

IMPORTANT: The valve seat is destroyed during valve seat removal. If the valve seat is removed, the oil pressure regulating valve will need to be replaced.

5. Pull valve seat out of cylinder block with JT01727 Collet (A) and JT01718 Slide Hammer (B) from D01061AA Blind-Hole Puller Set, or equivalent.

A—JT01727 Collet
B—JT01718 Slide Hammer

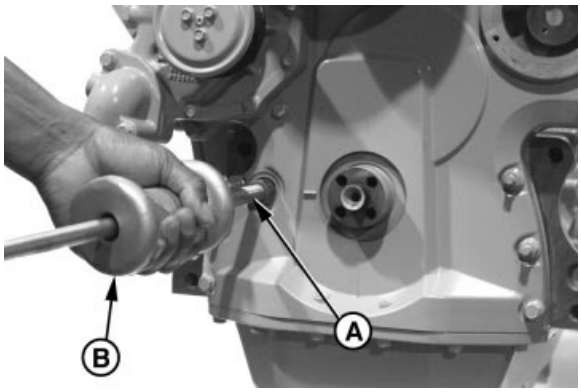

Oil Pressure Regulating Valve Seat

RG,20,DT7529 –19–10DEC03–3/8

IMPORTANT: DO NOT drive against raised inner rim of valve seat so that valve seat bore is not damaged.

6. Drive valve seat into cylinder block with JD248A (JD-248A)[1] Oil Pressure Relief Valve Bushing Driver and JDG536 (OTC813) Handle until the seat bottoms in bore.

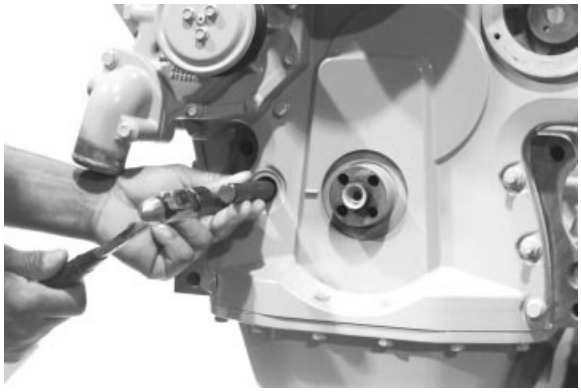

Oil Pressure Regulating Valve Seat

[1]Order JD-248A when tool is ordered from European Parts Distribution Center (EPDC)

Continued on next page

RG,20,DT7529 –19–10DEC03–4/8

7. Install valve, spring, washer, and plug in timing gear cover. Tighten plug to specification.

Specification

Oil Pressure Regulating Valve—
Torque ..... 95 N•m (70 lb-ft)

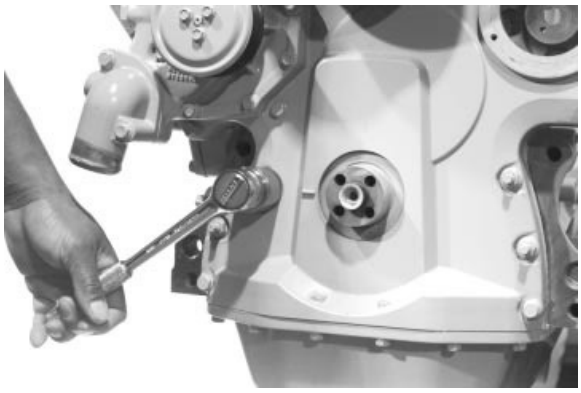

Oil Pressure Regulating Valve and Plug in Timing Gear Cover

RG,20,DT7529 –19–10DEC03–5/8

Remove and Install Oil Pressure Regulating Valve (Later Engines)

IMPORTANT: If replacing a valve on an earlier engine with a valve seat, with a later cartridge style valve, remove valve seat before installing new valve. (See REMOVE AND INSTALL OIL PRESSURE REGULATING VALVE AND SEAT (EARLIER ENGINES) previously in this procedure.)

1. Remove timing gear cover. (See REMOVE TIMING GEAR COVER in Group 050.)

2. Install valve puller (A) (part of JDG1517 Pressure Regulating Valve Installer and Remover Tool Set) on oil regulating valve (B). Make sure barbs (D) lock into slots (C) of valve.

3. Slide sleeve (E) (part of JDG1517 Pressure Regulating Valve Installer and Remover Tool Set) completely over valve puller.

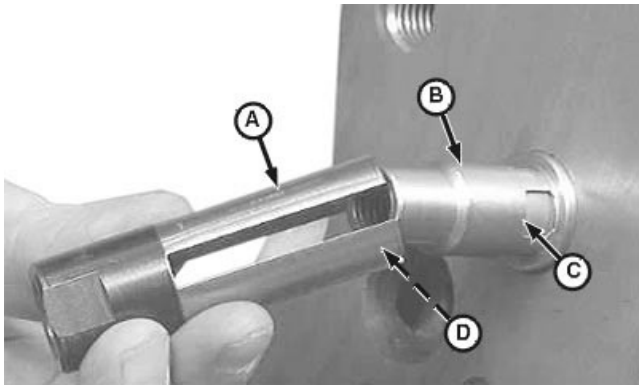

Install Valve Puller (Later Engines)

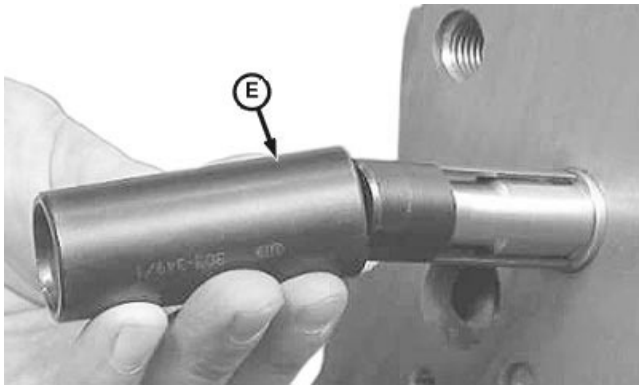

Install Sleeve (Later Engines)

A—Valve Puller
B—Oil Regulating Valve
C—Slot
D—Barb (One on Each Leg of Puller)
E—Sleeve

Continued on next page

RG,20,DT7529 –19–10DEC03–6/8

4. Install JT01718 Slide Hammer (A) into threaded end of valve puller (B) and remove the valve from the engine block.

5. To remove the valve puller from the oil regulating valve, first remove the sleeve and slightly rotate the puller on the valve. This will cause the puller to come out of the valve slots so it can be removed. (There is a chamfer on the inside of each leg, allowing the valve puller to be easily rotated.)

A—Slide Hammer
B—Valve Puller

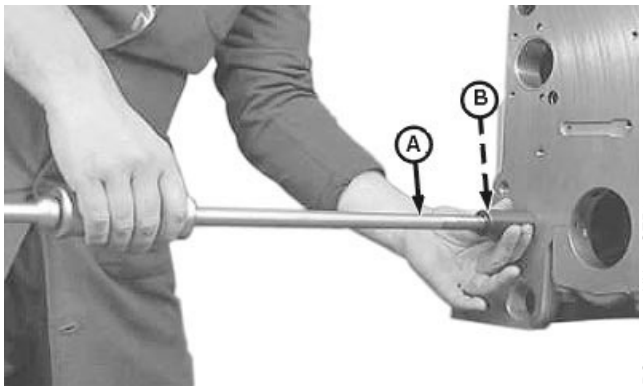

Remove Oil Pressure Regulating Valve (Later Engines)

RG,20,DT7529 –19–10DEC03–7/8

NOTE: It is recommended to replace cartridge style valves only after engine front plate is installed. Front plate mounting studs will help protect valve from damage.

6. To install the oil pressure regulating valve, insert valve insertion tool (A) (part of JDG1517 Pressure Regulating Valve Installer and Remover Tool Set) into oil pressure regulating valve (B). Use a hammer to drive the valve into bore (C) of engine block until fully seated.

A—Valve Insertion Tool
B—Oil Pressure Regulating Valve
C—Hole in Engine Block

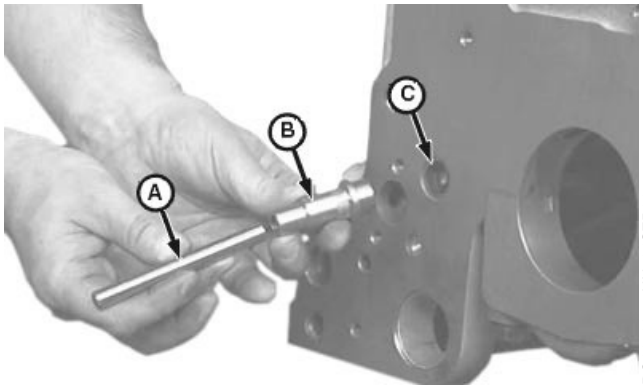

Valve Insertion Tool and Oil Regulating Valve

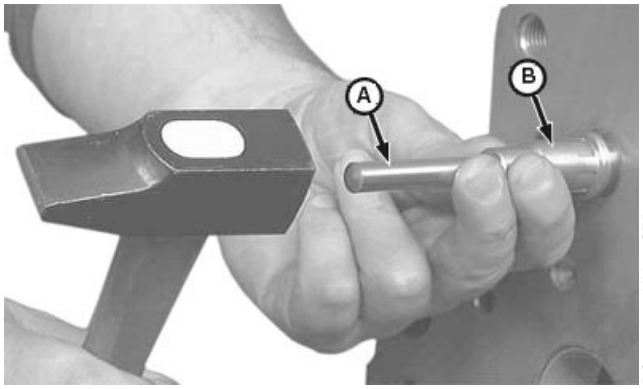

Install Oil Pressure Regulating Valve

RG,20,DT7529 –19–10DEC03–8/8

Remove and Install Oil Fill Adapter

NOTE: Some engines have a timing gear cover mounted oil filler. (See INSTALL TIMING GEAR COVER in Group 050.)

1. Remove oil fill tube (A).

IMPORTANT: Engine damage and/or failure can result if the wrong cap screws are used in assembly of oil fill adapter. The oil fill adapter is used in multiple oil fill option codes. Regardless of the engine, cap screws used to attach the oil fill adapter to the engine must never thread into the cylinder block deeper than 14 mm (0.551 in.). When all required components are considered (plates, spacers, gaskets, etc.), installing a cap screw that threads into the cylinder block deeper than 14 mm (0.551 in.) could cause the camshaft to be side-loaded, resulting in engine damage during start-up.

2. Inspect and replace adapter as needed.

3. If replacing with a new RE501377 Oil Fill Adapter, refer to the engine option code label on the rocker arm cover for the correct oil fill option code. Then refer to the following table to select the proper length cap screws listed in the table.

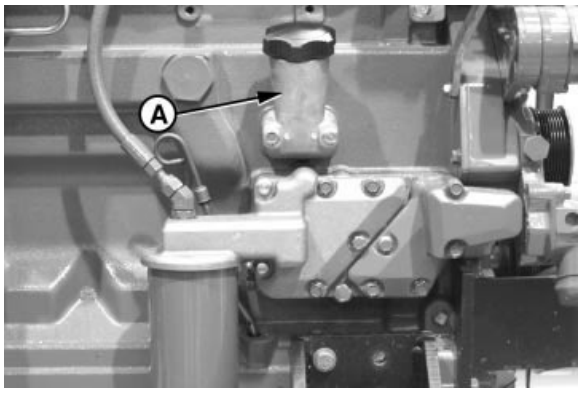

Oil Fill Adapter

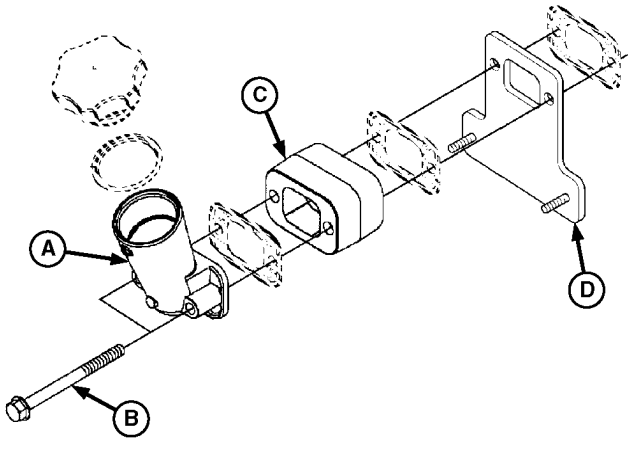

A—Oil Fill Adapter
B—Cap Screw
C—Spacer
D—Bracket

Option Code*	Cap Screw (B) with Pre-Applied Thread Locker and Sealant**	Cap Screw (B) without Pre-Applied Thread Locker and Sealant**	Cap Screw (B) Specifications	Spacer (C)	Bracket (D)
1201, 1202, 1212, 1214, 1215	RE67239	19M7799	M8x1.25x45	None	None
1203, 1210	RE71526	19M7979	M8x1.2x55	None	None
1204, 1209	RE503609	19M7970	M8x1.25x100	R136514	None
1211	RE71527	19M7873	M8x1.25x110	R136514	RE70063

Continued on next page

* This option code should be used for reference only to identify ALL parts that are needed in the oil fill adapter assembly (gaskets, spacer, mounting plate, etc.). As previously stated, cap screw length should be chosen to meet the 14 mm (0.551 in.) maximum thread engagement depth requirement.

** If the 19M type cap screws are used, apply LOCTITE® 242 Thread Lock and Sealer (Medium Strength) to threads of cap screws to prevent oil leaks. If the RE type are used, new cap screws with pre-applied sealant must be used.

4. Using a new gasket, install oil fill adapter.

5. Tighten cap screws to specifications.

	Specification
Oil Fill Tube Cap Screws—	
Torque	35 N•m (26 lb-ft)

LOCTITE is a registered trademark of the Loctite Corp.

RG,20,DT7528 –19–19NOV03–2/2

Remove and Install Dipstick Tube with Oil Pan Installed

Remove Dipstick Tube

IMPORTANT: Orientation of dipstick tube in engine varies by application. Make index marks on tube and block to ensure correct orientation when reinstalling tube.

NOTE: Saran (CD) engines for the 6010 and 6020 series tractors use either a 71 mm or a 67.5 mm cylinder block machining height (C) for the oil dipstick tube location. Service tubes and dipsticks are as follows: R136162 Tube and AT21535 Dipstick for 71 mm configuration (Engine S.N. —550948CD), or R501178 Tube and RE502740 Dipstick for 67.5 mm configuration (Engine S.N. 550949CD—). Additionally, there may be some later engines still using the 71 mm configuration dipstick tube with a spacer to compensate for the 67.5 mm block machining. For service, these should be replaced with the 67.5 mm configuration tube and dipstick.

1. Remove dipstick (A).

2. Using JT01724 (5/16 in.) Collet, JT01720 Actuator Pin, and 1156 Slide Hammer, remove dipstick tube (B) from block.

Install Dipstick Tube

1. Coat end of new dipstick tube with LOCTITE® 271 Thread Lock and Sealer (High Strength).

A—Dipstick
B—Dipstick Tube
C—Block Machining Height

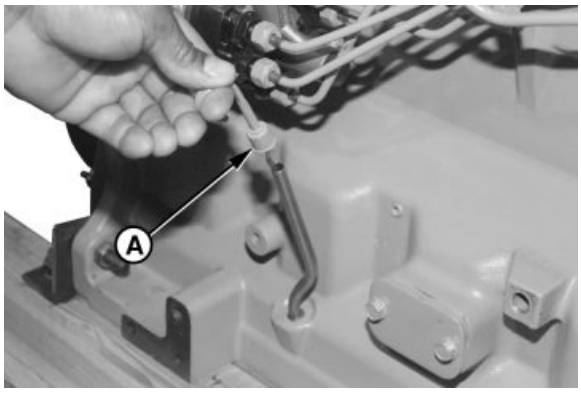

RG7979 –UN–14NOV97

Dipstick and Dipstick Tube

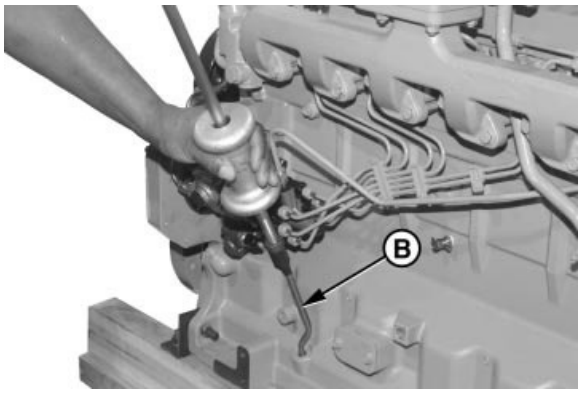

RG7980 –UN–14NOV97

Dipstick Tube Removal Tool

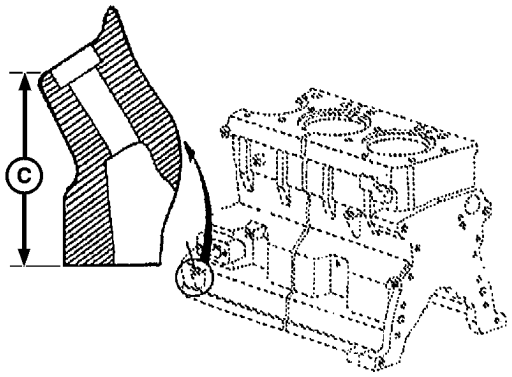

RG10564 –UN–21DEC99

LOCTITE is a registered trademark of the Loctite Corp.

Continued on next page

RG,20,DT7527 –19–10NOV99–1/3

NOTE: On 5524 and 5525 Series Tractors, orient the dipstick tube toward the front of engine.

6010 and 6020 Series Tractors use a straight dipstick tube.

On 7810 Tractors, orient the dipstick tube with the top bend directed toward the front of the engine and the centerline plane of the top bend angled 45 degrees outward from the crankshaft vertical plane.

2. Orient right-hand dipstick tube with first bend directed toward rear of engine and centerline plane of first bend angled 20 degrees toward the crankshaft centerline.

   Orient left-hand dipstick tube with first bend directed toward rear of engine and centerline plane of first bend parallel with the crankshaft centerline.

RG,20,DT7527 –19–10NOV99–2/3

NOTE: JDG965 Dipstick Driver cannot be used for straight dipstick tube used on 6010 and 6020 Series Tractors. Use Engine Oil Dipstick Tube Driver (dealer fabricated tool) on these tractors. Refer to Section 05, Group 190, Dealer Fabricated Tools.

3. Using JDG965 Dipstick Driver (C), install dipstick tube until shoulder bottoms.

4. Install dipstick.

C—Dipstick Driver

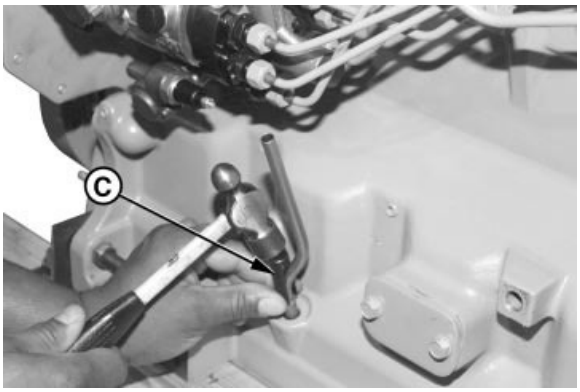

Dipstick Tube Installation Tool

RG,20,DT7527 –19–10NOV99–3/3

Remove and Install Dipstick Tube with Fitting

1. Unscrew dipstick tube from fitting and remove.
2. Remove fitting from block.
3. Coat smooth end of dipstick fitting with LOCTITE® 271 Thread Lock and Sealer (High Strength).
4. Position fitting (B) in JDG1146 Dipstick Fitting Installer (A) as shown.

   Orient fitting with threaded end pointing out and straight up from block.

   Drive fitting flush with block.
5. Install dipstick tube on fitting.

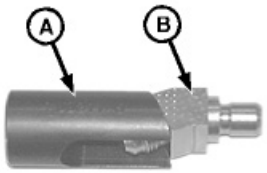

RG9115 –UN–02APR98

Left-Hand Dipstick Tube Fitting

A—JDG1146 Dipstick Fitting Installer Tool
B—Dipstick Fitting (Angled Design)

LOCTITE is a registered trademark of Loctite Corp.

DPSG,OUO1004,80 –19–24APR98–1/1

Remove, Inspect, and Install Oil Pump Pick-Up Tube Assembly

02
060
24

A loose or damaged suction tube or O-ring can cause a temporary loss of prime for the engine oil pump at start-up. There will be low or no oil pressure at starting, followed by normal engine oil pressure.

NOTE: If the pick-up tube is to be inspected only and not removed, verify mounting cap screw torque to ensure proper seating and seal.

1. Remove oil pan.
2. Loosen cap screws (A) and remove oil pump pick-up tube assembly.
3. Inspect pick-up tube for cracks, restrictions or damage. Replace if necessary.
4. Install assembly with new O-ring and tighten cap screws to specifications.

Specification	
Oil Pump Pick-Up Tube Cap Screws—Torque	35 N•m (26 lb-ft)

5. Reinstall oil pan. (See INSTALL OIL PAN, later in this group.)

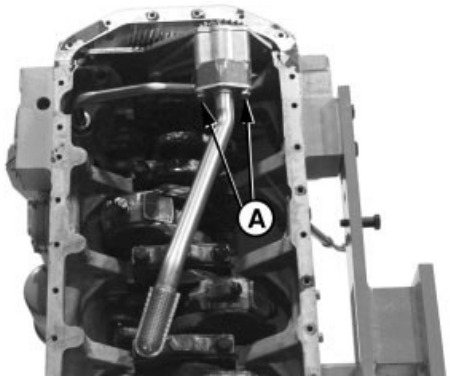

RG7596 –UN–05JAN98

Oil Pump Pick-Up Tube Assembly

A—Cap Screws

RG,20,DT7526 –19–17NOV97–1/1

Engine Oil Pump Assembly

A—Outlet Tube
B—O-Ring
C—Pump Housing
D—Idler Gear
E—Drive Gear
F—Cover

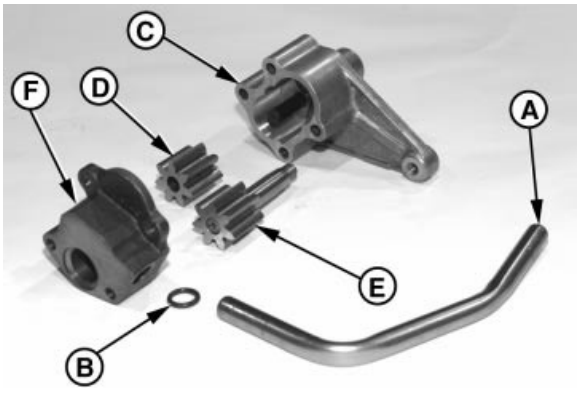

RG7610A –UN–06NOV97

Engine Oil Pump

RG,20,DT7525 –19–17NOV97–1/1

Remove Engine Oil Pump

1. Drain oil and disconnect turbocharger oil inlet line (A) at the turbocharger.
2. Remove oil pan.
3. Remove gasket from oil pan and oil pan rail.

A—Oil Inlet Line

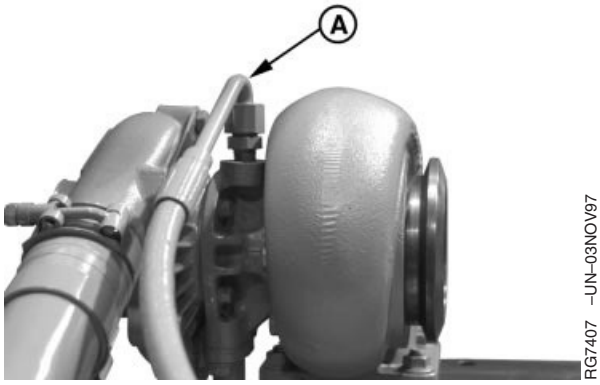

Turbocharger Oil Inlet Line

RG,20,DT7524 –19–17NOV97–1/3

4. On 4-cylinder engines with balancer shafts, lock crankshaft at TDC using JDE81-1 or JDE83 Flywheel Turning Tool and JDG1571 or JDE81-4 Timing Pin. Then lock the balancer shaft (injection pump side) using a lock-grip pliers so that balancer shaft cannot turn while oil pump gear is being removed.

IMPORTANT: When removing nut and gear from tapered oil pump drive shaft, take care not to damage fine threads on end of shaft.

5. Remove nut (B) and pull gear from tapered oil pump drive shaft.

   To remove oil pump gear, loosen nut several turns and apply force between the front plate and gear on two sides of gear with pry bars.

   If above method does not work, loosen oil pump housing cap screws and strike the nut on end of shaft with a small **lead** hammer while applying force to gear until gear is free of tapered shaft.

6. Remove oil pump pick-up tube. (See REMOVE, INSPECT, AND INSTALL OIL PUMP PICK-UP TUBE ASSEMBLY in this group.)

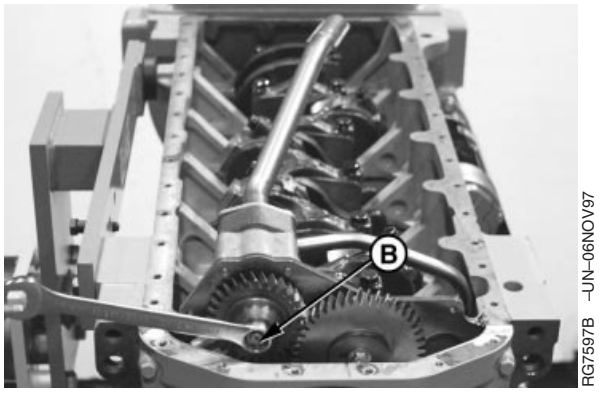

Oil Pump, Gear and Nut

B—Gear Retaining Nut

Continued on next page

RG,20,DT7524 –19–17NOV97–2/3

7. Remove upper two cap screws and remove cover (A).

NOTE: The lower idler gear cap screw (C) has to be removed to remove the oil pump housing.

8. Loosen idler cap screw (C).

9. Remove lower oil pump housing cap screws and turn idler cap screw (C) out while removing oil pump housing assembly (B).

A—Cover
B—Oil Pump Housing
C—Idler Cap Screw

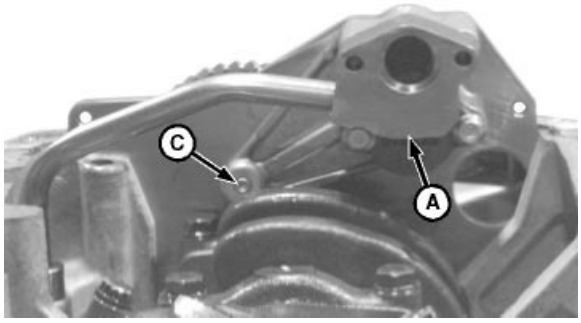

RG9077 –UN–12MAR98

Oil Pump Cover

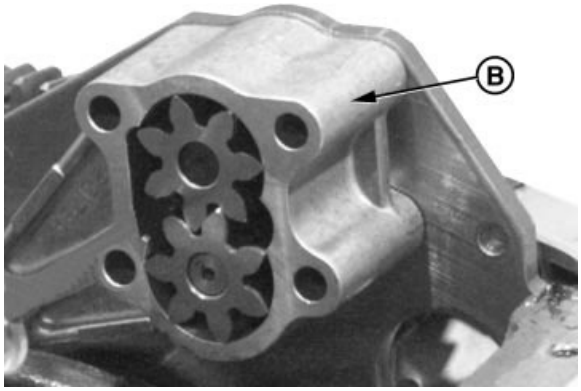

RG7967B –UN–14NOV97

Oil Pump Housing Assembly

RG,20,DT7524 –19–17NOV97–3/3

Inspect and Measure Clearances

Inspect oil pump components for excessive wear. Replace parts or oil pump assembly, as necessary.

1. Check gear-to-pump cover axial clearance.

Specification	
Oil Pump Gears—Thickness	35.975—36.025 mm (1.4163—1.4183 in.)
Oil Pump Gears—Axial Clearance	0.045—0.165 mm (0.0018—0.0065 in.)


RG7601 –UN–23NOV97

Checking Gear-to-Pump Cover Axial Clearance


RG7602 –UN–23NOV97

Checking Gear Thickness

Continued on next page

RG,20,DT7523 –19–17NOV97–1/4

2. Check gear-to-pump housing radial clearance.

Specification

Oil Pump Gears—Radial Clearance	0.131—0.211 mm (0.005—0.008 in.)

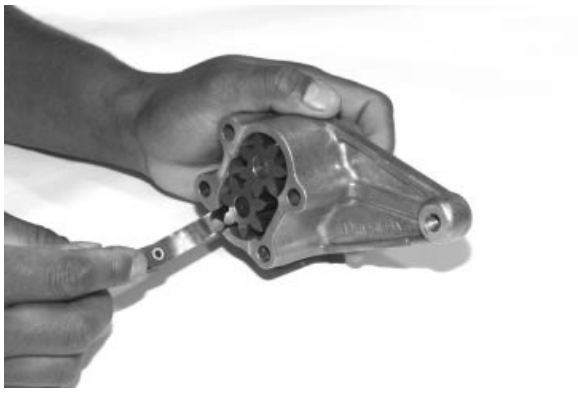

RG7603 –UN–23NOV97

Checking Gear-to-Pump Housing Radial Clearance

RG,20,DT7523 –19–17NOV97–2/4

3. Check housing and cover bore ID and shaft OD. Inspect cover and housing for evidence of gear rub. Light contact is acceptable.

4. Measure bushing ID in housing and bore in cover.

Specification

Oil Pump Drive Shaft—OD	16.017—16.037 mm (0.6306—0.6314 in.)
Oil Pump Bushing in Housing—ID	16.052—16.102 mm (0.632—0.634 in.)



RG7605 –UN–23NOV97

Measuring Drive Shaft OD for Wear



RG7606 –UN–23NOV97

Measuring Bushing ID in Housing for Wear

Continued on next page

RG,20,DT7523 –19–17NOV97–3/4

5. Measure idler shaft OD and idler gear ID

Specification	
Oil Pump Idler Shaft—OD	12.316—12.332 mm (0.4849—0.4855 in.)
Oil Pump Idler Gear—ID	12.355—12.363 mm (0.4864—0.4867 in.)

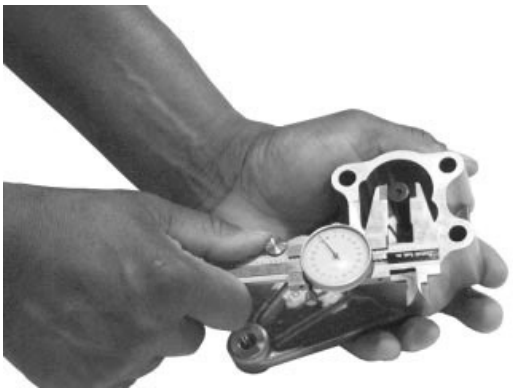

RG7607 –UN–23NOV97

Measure Idler Shaft OD for Wear



RG7608 –UN–23NOV97

Measure Idler Gear ID for Wear

RG,20,DT7523 –19–17NOV97–4/4

Complete Oil Pump Disassembly

1. Remove O-ring from pump housing and cylinder block (for outlet tube).
2. Remove O-ring from oil pick-up tube.
3. Clean oil pump parts in solvent. Dry with compressed air.
4. Inspect pick-up tube. Check flange-to-pick-up tube weld for cracks. If cracks or other defects are found, replace pick-up tube. (See REMOVE, INSPECT AND INSTALL OIL PUMP PICK-UP TUBE ASSEMBLY, in this group.)

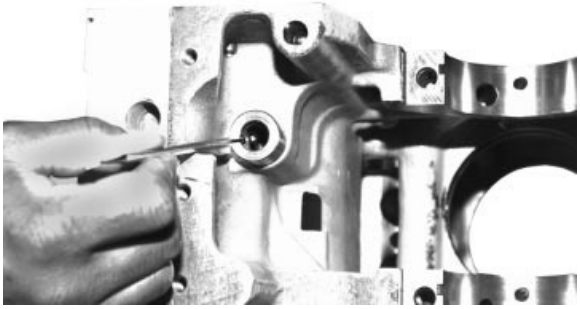

RG7609 –UN–23NOV97

RG,20,DT7522 –19–17NOV97–1/1

Assemble Engine Oil Pump

IMPORTANT: Lubricate gears and shaft with clean engine oil before assembling.

1. Install new O-ring (B) in pump cover (F).
2. Put idler gear (D) and drive gear (E) in pump housing (C).

A—Outlet Tube
B—O-Ring
C—Pump Housing
D—Idler Gear
E—Drive Gear
F—Cover

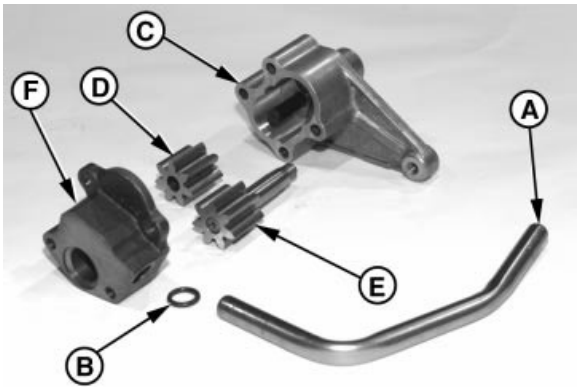

Engine Oil Pump

RG,20,DT7521 –19–17NOV97–1/1

Install Engine Oil Pump

NOTE: This procedure is for installing the oil pump with timing gear cover installed. If timing gear cover is removed from engine, refer to INSTALL AND TIME BALANCER SHAFTS (4-Cylinder Engines) in Group 050.

02
060
30

1. On 4-cylinder engines with balancer shafts, lock No. 1 piston at TDC compression stroke.
2. Install new O-rings in cylinder block and oil pump cover (for outlet tube). Install tube into cover and block.
3. Lubricate lower idler gear cap screw threads (C) and draw into leg of housing finger tight while installing oil pump housing (A) with gears onto front plate.
4. Wedge a hardened round punch between the drive gear and idler gear.
5. Install oil pump drive gear (D) so that it meshes with lower idler gear (E) and balancer shaft gear (4045 engines only) without altering gear train timing.
6. Install new retaining nut and tighten to specifications.

Specification

Oil Pump Drive Gear "Staked" Nut—Torque ..... 50 N•m (37 lb-ft)

7. Stake oil pump drive gear nut by applying three center punch marks near ID of shaft.
8. Swing (position) oil pump cover (B) onto pump housing and install two lower cap screws finger tight.

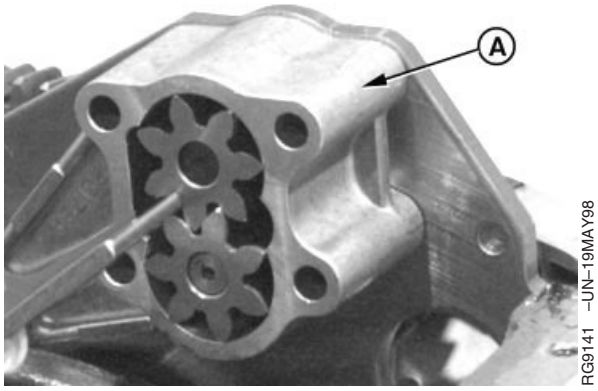

Oil Pump Housing Assembly

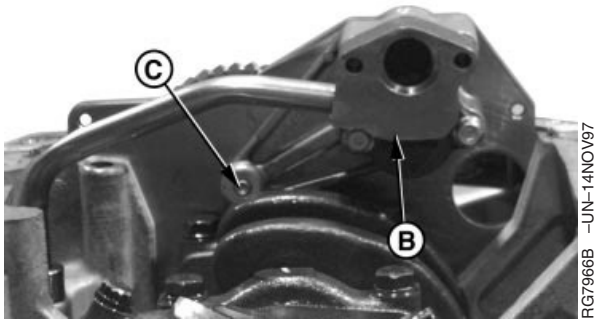

Oil Pump Cover and Lower Idler Gear Cap Screw

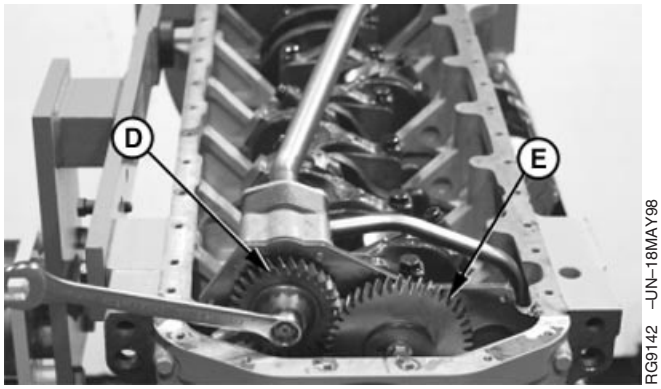

Oil Pump, Gear and Lower Idler Gear

A—Oil Pump Housing
B—Oil Pump Cover
C—Idler Gear Cap Screw
D—Oil Pump Drive Gear
E—Lower Idler Gear

Continued on next page

RG,20,DT7520 –19–17NOV97–1/3

9. Install new O-ring (A) on neck of pick-up tube. Install pick-up tube. (See REMOVE, INSPECT, AND INSTALL OIL PUMP PICK-UP TUBE ASSEMBLY in this group.)

A—O-Ring

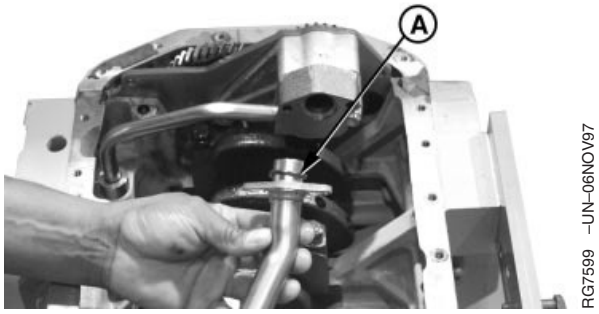

O-Ring on Pick-Up Tube Neck

RG,20,DT7520 –19–17NOV97–2/3

NOTE: Idler gear cap screw threads (5) must be lubricated.

10. Tighten four cap screws and lower idler gear cap screw to specified torque according to sequence shown.

Specification	
Oil Pump-to-Front Plate and Oil Pump Pick-Up Tube Cap Screws—Torque	35 N•m (26 lb-ft)
Oil Pump Lower Idler Gear Cap Screw (Lubricated Threads)—Torque	70 N•m (53 lb-ft)

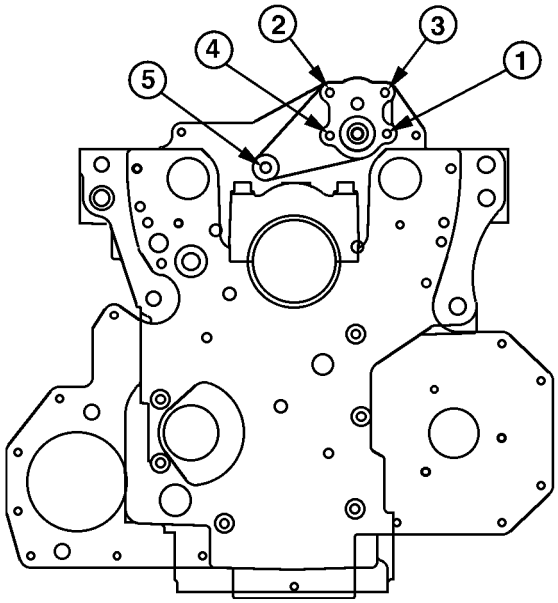

Viewed from Rear of Engine

RG,20,DT7520 –19–17NOV97–3/3

Install Oil Pan

1. Apply LOCTITE® 515 Flexible Form-In-Place Gasket on oil pan rail, as shown, where flywheel housing, front plate, and timing gear cover attach to cylinder block.
2. Install oil pan gasket.
3. Install oil pan and tighten cap screws to specifications.

Specification	
Oil Pan M8 Cap Screws—Torque	35 N•m (26 lb-ft)
Oil Pan M10 Cap Screws up to 110 mm—Torque	70 N•m (52 lb-ft)
Oil Pan M10 Cap Screws 110 mm and Above—Torque	60 N•m (44 lb-ft)
Oil Pan M10 Serrated Flange-head Cap Screws—for 4045DAT70, 4045TAT50, 4045TAT70 or 4045TAT71 Engines—Torque	35 N•m (26 lb-ft)
Oil Pan M10 Cap Screws—Option Code 1931 and PE4045DLV50 or PE4045TLV50 Engines—Torque	44 N•m (33 lb-ft)
Flywheel Housing-to-Oil Pan Cap Screws (A) (if required)—Torque	280 N•m (207 lb-ft)

4. Install O-ring or copper washer on drain plug. If copper washer is used, install with raised center against plug. Install plug in oil pan. Tighten drain plug to specifications.

Specification	
Oil Pan Drain Plug with Copper Washer—Torque	70 N•m (52 lb-ft)
Oil Pan Drain Plug with O-Ring—Torque	50 N•m (37 lb-ft)
Oil Pan Drain Plugs—Option Codes 1976 and 1981—Torque	21 N•m (186 lb-in.)
Oil Pan Drain Plugs—Option Codes 19AC, 1941 and 1961—Torque	40 N•m (29.5 lb-ft)
Oil Pan Drain Plugs with 10 mm Square Socket Head—Torque	68 N•m (50 lb-ft)
Oil Pan Drain Plugs with Steel Washer—Torque	27 N•m (20 lb-ft)

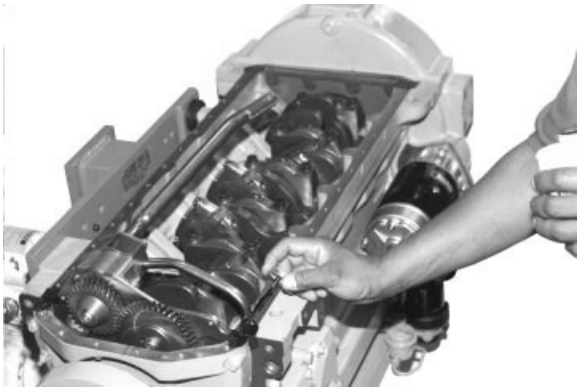

RG7611 –UN–28AUG96

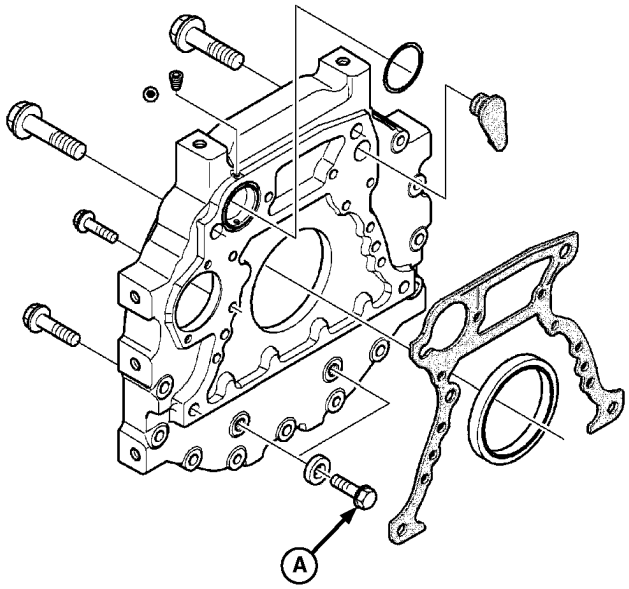

RG13384 –UN–12DEC03

Flywheel Housing

A—Flywheel Housing-to-Oil Pan Cap Screws

LOCTITE is a registered trademark of the Loctite Corp.

Continued on next page

RG,20,DT7519 –19–19NOV03–1/2

5. If equipped with elbow drain fittings, the threads and sealing surfaces must be free of oil film to ensure an effective seal. Apply LOCTITE® 592 Pipe Sealant with TEFLON® to fitting except for the leading one to three threads. Install and tighten fitting.

6. If equipped with side oil return ports, install port plugs and tighten to specification.

Specification

Oil Return Port Plugs—Torque ..... 27 N•m (20 lb-ft)

7. If equipped with oil level sensor, install sensor and tighten to specification.

Specification

Oil Level Sensor Cap Screws—
Torque ..... 10 N•m (88 lb-in.)

8. Fill engine crankcase with correct grade and viscosity engine oil. See DIESEL ENGINE OIL—NON-CERTIFIED AND Tier 1 CERTIFIED ENGINES or DIESEL ENGINE OIL—Tier 2 ENGINES in Section 01, Group 002, Fuels, Lubricants, and Coolants.

LOCTITE is a registered trademark of the Loctite Corp.
TEFLON is a registered trademark of the DuPont Co.

RG,20,DT7519 –19–19NOV03–2/2

Remove Coolant Manifold/Thermostat Cover and Thermostat

CAUTION: Explosive release of fluids from pressurized cooling system can cause serious burns. Do not drain coolant until coolant temperature is below operating temperature. Always loosen cooling system filler cap, radiator cap, or drain valve slowly to relieve pressure.



TS281 –UN–23AUG88

Cooling System Safety

NOTE: On some engines, the coolant manifold/thermostat housing is an integral part of the cylinder head.

1. Partially drain coolant from system.

RG,25,JW7561 –19–15OCT01–1/3

2. Remove thermostat cover-to-coolant pump tube (A) and seal.
3. Visually inspect area around coolant manifold/thermostat cover for leaks.

A—Tube



RG8115A –UN–15JAN98

Thermostat Cover-to-Coolant Pump Tube

Continued on next page

RG,25,JW7561 –19–15OCT01–2/3

4. Remove coolant manifold/thermostat cover (B) with gasket.
5. Remove thermostat.
6. Remove and discard all gasket material. Clean gasket surfaces.
7. Clean and inspect cover for cracks or damage.

B—Cover

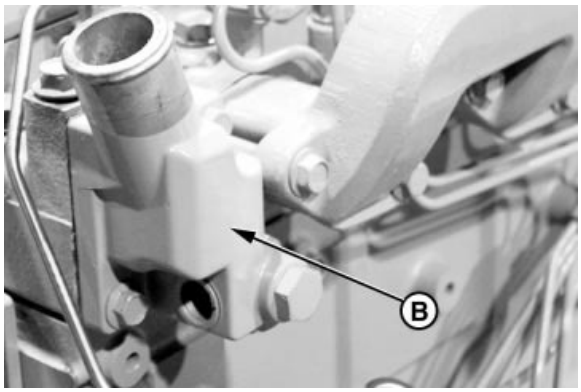

Coolant Manifold/Thermostat Cover

RG,25,JW7561 –19–15OCT01–3/3

Install Coolant Manifold/Thermostat Cover and Thermostat

IMPORTANT: Install manifold gasket so that smaller (round) holes are at lower left and upper right corners of manifold (matching studs A).

1. Using guide studs (A) to keep gasket in place, install a new gasket on cylinder head.

NOTE: Thermostat must be installed with jiggle pin facing up in the 12 o'clock position.

2. Using a screwdriver to hold thermostat in place, install thermostat and coolant manifold/thermostat cover. Tighten cover cap screws to specifications.

Specification	
Coolant Manifold/Thermostat Cover Cap Screws (Single Thermostat)—Torque	70 N•m (52 lb-ft)

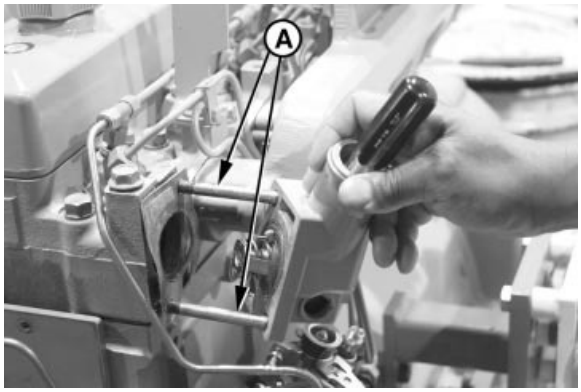

Coolant Manifold/Thermostat Cover

A—Guide Studs

Continued on next page

RG,25,JW7559 –19–15OCT01–1/3

3. Lubricate new O-ring with PT507 Multi-Purpose Grease. Install seal (B) in thermostat cover.

B—Seal

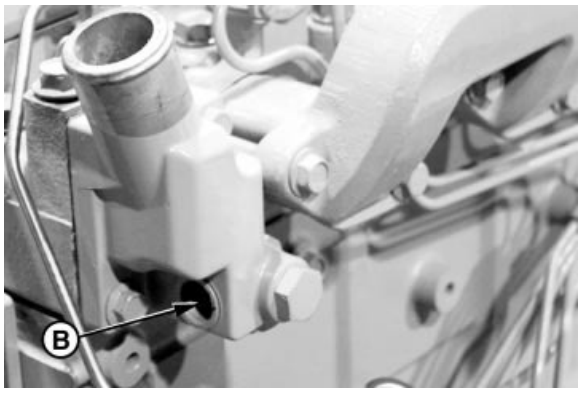

Thermostat Cover Seal

RG,25,JW7559 –19–15OCT01–2/3

4. Install coolant manifold/thermostat cover-to-coolant pump tube (C). Tighten clamps.

IMPORTANT: Air must be expelled from cooling system when filling. Loosen temperature sending unit fitting at rear of cylinder head or plug in thermostat housing to allow air to escape when filling system. Tighten fitting or plug when all air has been expelled.

5. Fill cooling system and check for leaks.

Specification

Air Bleed Port Plug—Torque..... 6 N•m (53 lb-in.)

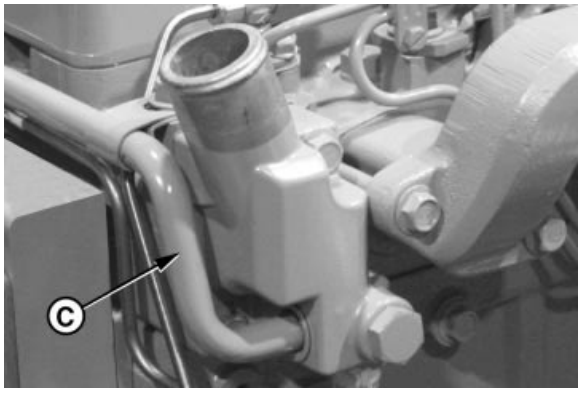

Thermostat Cover-to-Coolant Pump Tube

C—Tube

RG,25,JW7559 –19–15OCT01–3/3

Remove and Install Coolant Manifold/Thermostat Cover and Thermostat (High Flow Single Thermostat)

02
070
4

CAUTION: Explosive release of fluids from pressurized cooling system can cause serious burns. Do not drain coolant until coolant temperature is below operating temperature. Always loosen cooling system filler cap, radiator cap, or drain valve slowly to relieve pressure.



TS281 –UN–23AUG88

Cooling System Safety

1. Partially drain coolant from system.

Continued on next page

DPSG,OUO1004,1135 –19–15OCT01–1/3

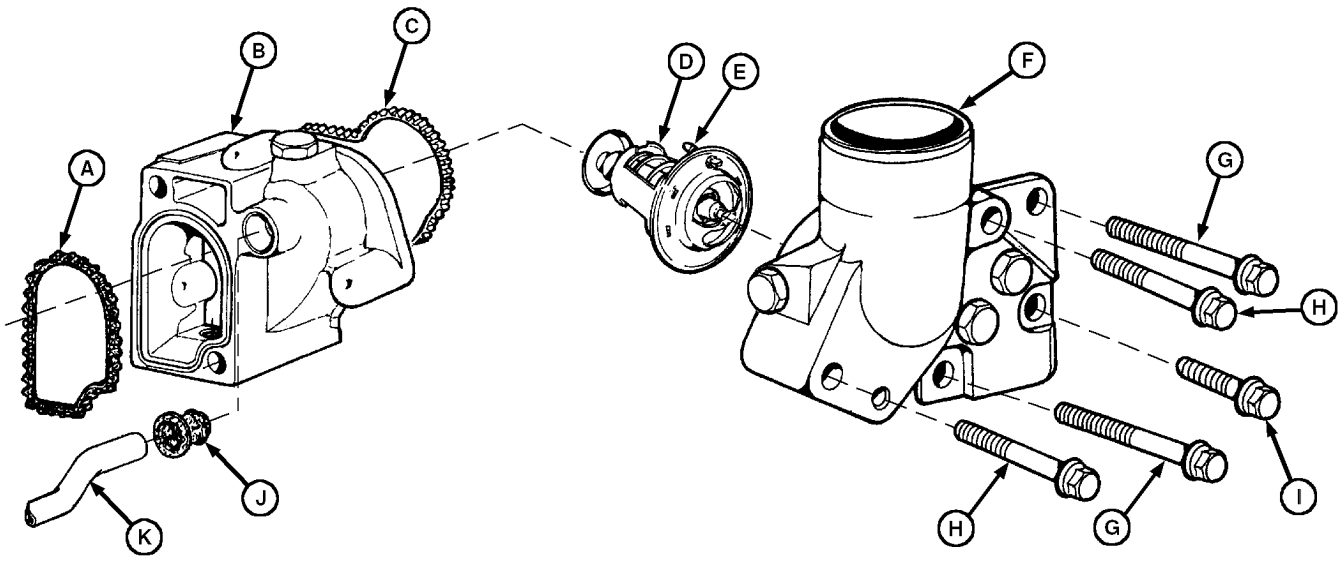

RG10543 –UN–29NOV99

Coolant Manifold and Thermostat (High Flow Single Thermostat)

A—Seal
B—Coolant Manifold
C—Seal
D—Thermostat
E—Jiggle Pin
F—Thermostat Cover
G—Cap Screw (M10 x 90) Thermostat Cover-to-Coolant Manifold-to-Cylinder Head
H—Cap Screw (M10 x 70) Thermostat Cover-to-Coolant Manifold
I—Cap Screw (M10 x 25) Thermostat Cover-to-Coolant Manifold
J—Seal
K—Coolant Manifold-to-Coolant Pump Tube

2. Remove coolant manifold-to-coolant pump tube (K) and seal (J).

3. Visually inspect area around coolant manifold/thermostat cover for leaks.

4. Remove cap screws (G) and remove coolant manifold/thermostat cover assembly with gasket.

5. Remove thermostat cover (F) and thermostat (D).

6. Remove and discard all gasket material. Clean gasket surfaces.

7. Clean and inspect cover for cracks or damage.

NOTE: Thermostat must be installed with jiggle pin (E) facing up in the 12 o'clock position.

8. Install thermostat (D), cover (F) and seal (C) on coolant manifold. Hand tighten cover cap screws (H) and (I).

9. Install coolant manifold/thermostat cover assembly on engine using cap screws (G). Tighten all cap screws to specifications.

Specification	
Thermostat Cover-to-Coolant Manifold Cap Screws (H and I) (High Flow Single Thermostat)—Torque	30 N•m (22 lb-ft)
Coolant Manifold-to-Cylinder Head Cap Screws (G) (High Flow Single Thermostat)—Torque	35 N•m (26 lb-ft)

10. Install new seal (J) and tube (K). Tighten tube clamps securely.

11. Fill cooling system and check for leaks.

Continued on next page

IMPORTANT: Air must be expelled from cooling system when filling. Loosen temperature sending unit fitting at rear of cylinder head or plug in thermostat housing to allow air to escape when filling system. Tighten fitting or plug when all air has been expelled.

DPSG,OUO1004,1135 –19–15OCT01–3/3

02
070
6

Remove and Install Coolant Manifold and Thermostats (Dual Thermostats)

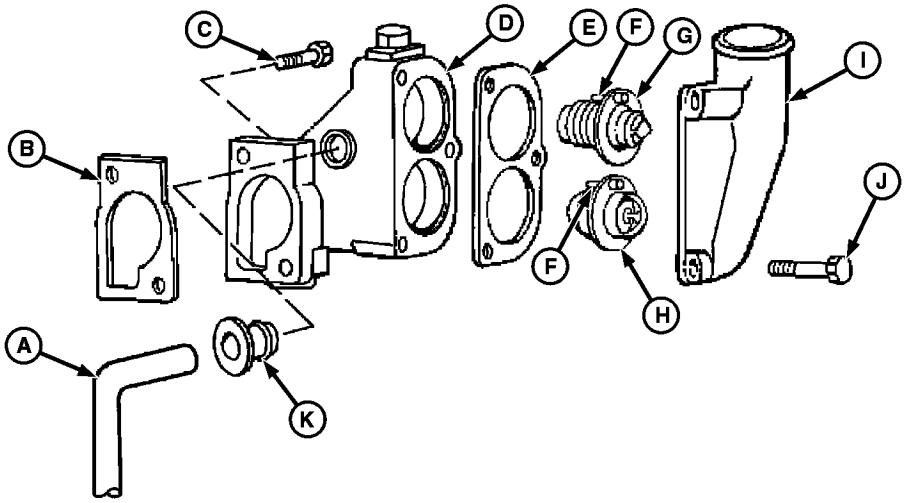

RG9112 –UN–30AUG01

Coolant Manifold and Dual Thermostats

A—Tube
B—Gasket
C—Cap Screw (2 used)
D—Coolant Manifold
E—Gasket
F—Jiggle Pin
G—Thermostat (Upper)
H—Thermostat (Lower)
I—Cover
J—Cap Screw (3 used)
K—Seal

CAUTION: Explosive release of fluids from pressurized cooling system can cause serious burns. Do not drain coolant until the coolant temperature is below operating temperature. Always loosen cooling system filler cap, radiator cap, or drain valve slowly to relieve pressure.

NOTE: Configuration of coolant manifold/dual thermostat assembly varies by engine application.

1. Partially drain coolant from system.
2. Remove coolant manifold-to-coolant pump tube (A) and seal (K).
3. Remove parts (E—J).
4. Remove coolant manifold (D) and gasket (B).
5. Discard all gasket material and clean mating surfaces.
6. Clean and inspect manifold and cover for cracks and damage.

NOTE: On vertical mounted manifolds (shown above), lower thermostat (H) must be installed with jiggle pin (F) facing up in the 12 o'clock position. Ensure upper and lower thermostats (G and H) are installed as shown in drawing. The larger (blocking) thermostat (G) is installed in the upper bore, while the smaller (non-blocking) thermostat (H) is installed in the lower bore.

7. Install parts (B—J).
8. Lubricate O-ring with PT507 Multi-Purpose Grease and install seal (K) and tube (A).

IMPORTANT: Air must be expelled from cooling system when filling. Loosen temperature sending unit fitting at rear of cylinder head or plug in thermostat housing to allow air to escape when filling system. Tighten fitting or plug when all air has been expelled.

DPSG,OUO1004,18 –19–02OCT01–1/1

Remove and Install Coolant Manifold, Thermostats and Side Port (Four-Valve Head)

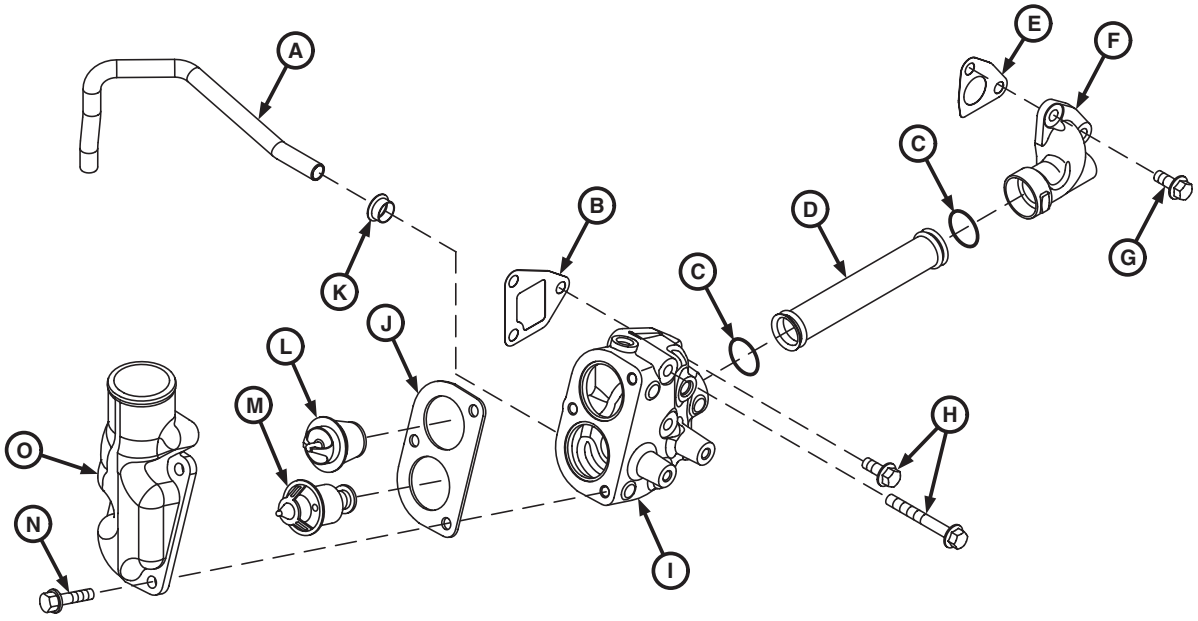

RG12164 –UN–22MAY02

Coolant Manifold and Dual Thermostats

A—Tube
B—Gasket
C—O-Ring
D—Coolant Tube
E—Gasket
F—Side Port
G—Cap Screw (2used)
H—Cap Screw (3 used)
I—Coolant Manifold
J—Gasket
K—Seal
L—Thermostat (Upper)
M—Blocking Thermostat (Lower)
N—Cap Screw (3 used)
O—Thermostat Cover

CAUTION: Explosive release of fluids from pressurized cooling system can cause serious burns. Do not drain coolant until the coolant temperature is below operating temperature. Always loosen cooling system filler cap, radiator cap, or drain valve slowly to relieve pressure.

1. Properly drain coolant from system.
2. Remove cap screws (G), side port (F), gasket (E) and coolant tube (D).
3. Remove cap screws (N), thermostat cover (O) and gasket (J).
4. Remove cap screws (H), coolant manifold (I) and gasket (B).
5. Discard seal (K) and O-rings (C).
6. Discard all gasket material and clean mating surfaces.
7. Clean and inspect manifold, cover, side port and coolant tube for cracks and damage. Replace as necessary.
8. Lubricate new seal (K) and tube (A) with petroleum jelly. Install seal in coolant manifold.
9. Install new gasket (B), coolant manifold (I) and cap screws (H). Tighten cap screws to specifications.

Specification	
Coolant Manifold-to-Cylinder Head Cap Screws (Four-Valve Head)—Torque	70 N•m (52 lb-ft)

Continued on next page

NOTE: Ensure upper and lower thermostats (L and M) are installed as shown in drawing. The blocking thermostat (M) is installed in the lower bore, while the non-blocking thermostat (L) is installed in the upper bore.

10. Install thermostats (L and K).

11. Install new gasket (J), thermostat cover (O) and cap screws (N). Tighten cap screws to specifications.

Specification	
Coolant Manifold Cover-to-Coolant Manifold Cap Screws (Four-Valve Head)—Torque	47 N•m (35 lb-ft)

12. Lubricate new O-rings (C) with petroleum jelly.

13. Install coolant tube (D), new gasket (E), side port (F) and cap screws (G). Tighten cap screws to specifications.

Specification	
Side Port-to-Cylinder Head Cap Screws (Four-Valve Head)—Torque	70 N•m (52 lb-ft)

IMPORTANT: Air must be expelled from cooling system when filling. Loosen temperature sending unit fitting in thermostat housing or plug at rear of cylinder head to allow air to escape when filling system. Tighten fitting or plug when all air has been expelled.

OUO1080,0000236 –19–17MAY02–2/2

Remove and Install Thermostat Cover and Thermostats (Tier 3)

1. Remove thermostat cover (A). Clean and check cover for cracks or damage

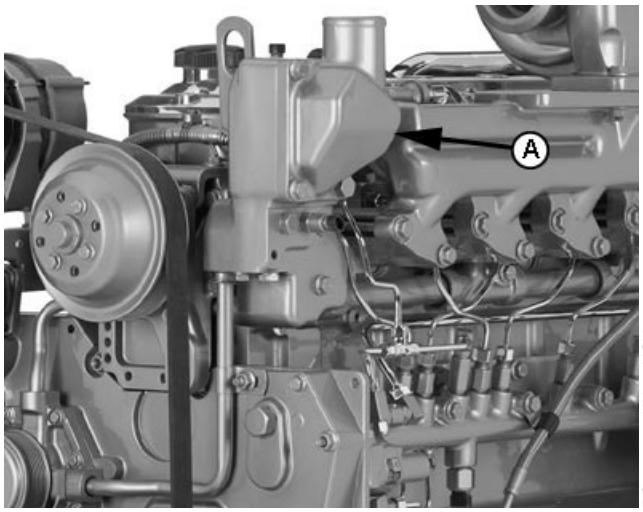

Thermostat Cover

Continued on next page

RG19661,0000046 –19–31MAR05–1/2

IMPORTANT: Thermostat type and location may vary. Carefully note the location and position of each thermostat before removing it from the housing for installation purposes

NOTE: Thermostat housing shown has one non-blocking thermostat (B) and two blocking thermostats (C). Thermostats on your engine may be different.

2. Remove all three thermostats from the housing.
3. Remove and discard rubber seal (A) from each of the three thermostats.
4. Install thermostats with new rubber seals in thermostat housing.
5. Install thermostat cover and tighten cap screws to specifications.

Specification	
Thermostat Cover Cap Screws— Torque	47 N•m (35 lb-ft)

A—Rubber Seal
B—Non-Blocking Thermostat
C—Blocking Thermostat

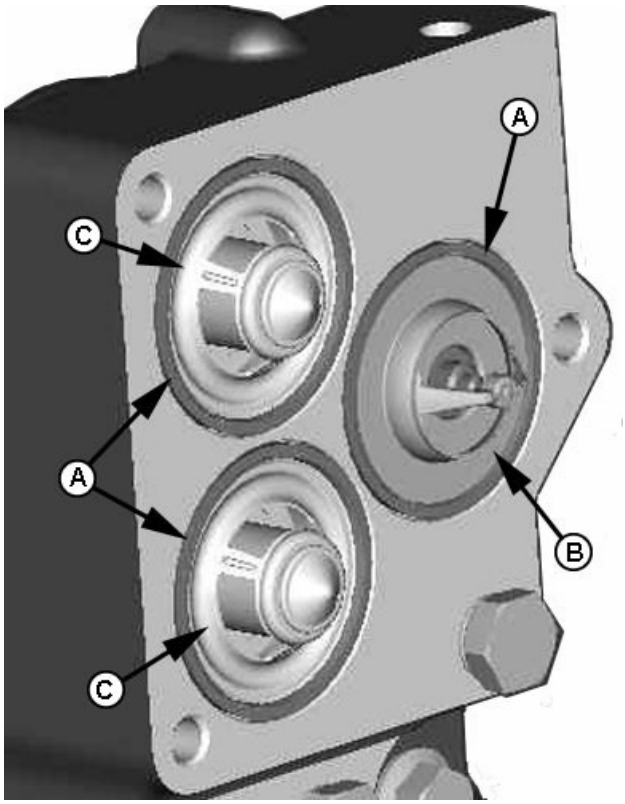

Thermostats

RG19661,0000046 –19–31MAR05–2/2

Test Thermostat(s)

Inspect thermostat(s) for debris or damage, and test each thermostat using an approved testing procedure. (See INSPECT THERMOSTAT AND TEST OPENING TEMPERATURE in Section 04, Group 150 for testing procedure and specifications.)

NOTE: Deaeration is accomplished by a jiggle pin or groove in thermostat flange area (positioned at top).

RG,25,JW7560 –19–20NOV97–1/1

Remove Coolant Pump

CAUTION: Explosive release of fluids from pressurized cooling system can cause serious burns. Do not drain coolant until the coolant temperature is below operating temperature. Always loosen cooling system filler cap, radiator cap, or drain valve slowly to relieve pressure.

IMPORTANT: Whenever the aluminum timing gear cover or coolant pump is replaced, the cooling system must be flushed and serviced, regardless of time/hours since last coolant change. See FLUSH AND SERVICE COOLING SYSTEM in Section 01, Group 002. Ensure system, including radiator, is completely drained.

On engines without coolant pump inserts, a coolant pump insert must be installed before installing coolant pump.

NOTE: Weeping or seepage of coolant, creating chemical streak trails from the weep hole of the pump, is normal.

"Weeping" is defined as a passing of liquid across a sealed surface of about 1-5 drops per day's usage.

"Seeping" describes an amount of liquid equal to or greater than 5 drops per day's usage.

"Leaking" is defined as a near constant dripping of coolant.

1. Drain coolant.
2. Remove fan (shown removed).
3. Release tension on belt (A) using a breaker bar and socket.
4. Remove poly-vee belt from pulleys.

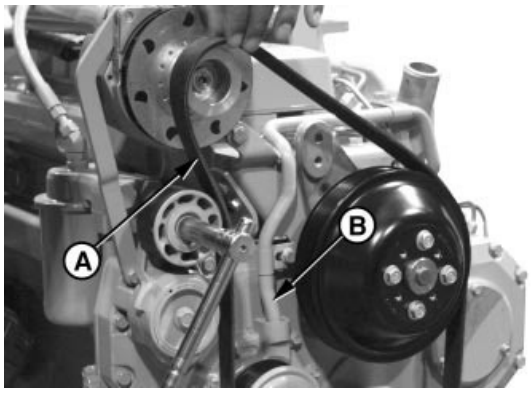

RG7937B –UN–13NOV97

Belt and Housing-to-Coolant Pump Tube

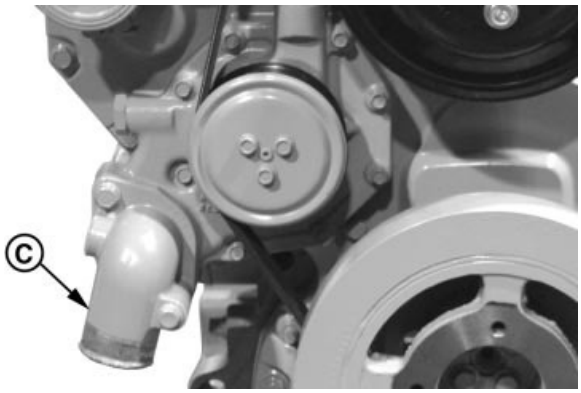

RG7922A –UN–13NOV97

Coolant Pump Inlet Elbow

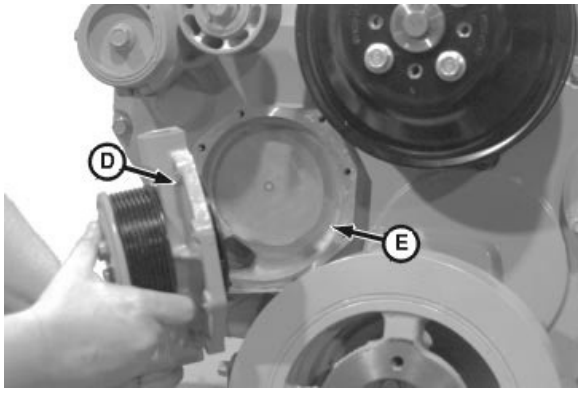

RG11799 –UN–01OCT01

Coolant Pump

A—Belt
B—Thermostat Housing-to-Coolant Pump Tube
C—Inlet Elbow
D—Coolant Pump
E—Coolant Pump Insert

Continued on next page

RG,25,JW7558 –19–20NOV03–1/2

5. Remove thermostat housing-to-coolant pump tube (B).
6. Remove coolant pump inlet elbow (C) and O-ring, if desired.
7. Remove coolant pump (D).
8. Remove coolant pump insert (E), if necessary.
9. Remove pulley from coolant pump.
10. Clean mating surfaces of pump, insert and timing cover.

02
070
12

RG,25,JW7558 –19–20NOV03–2/2

Coolant Pump Assembly

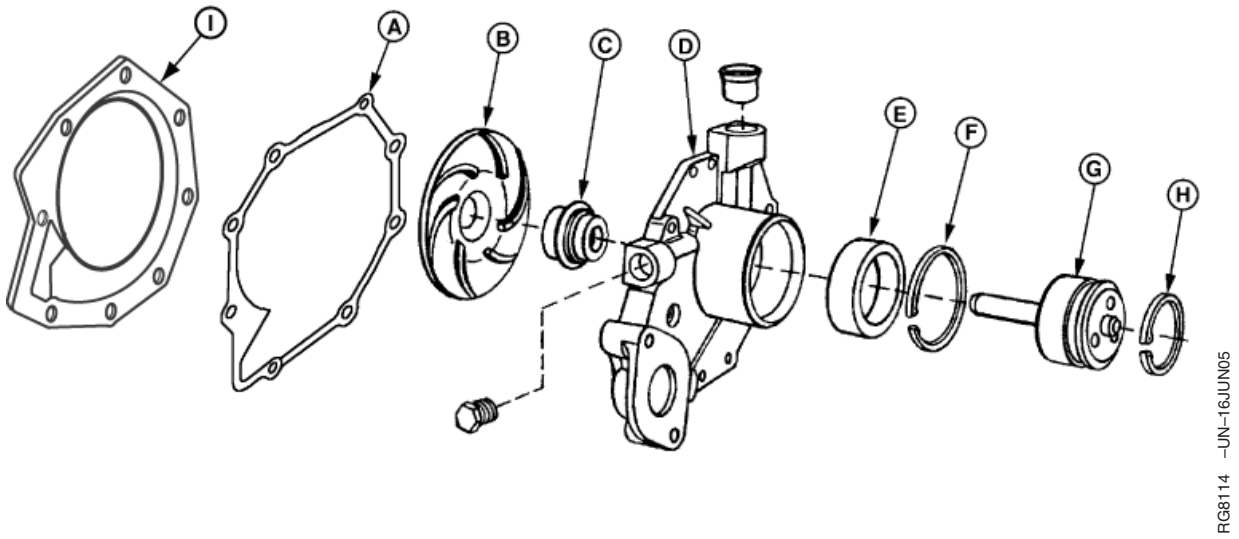

Coolant Pump Assembly

A—Gasket
B—Impeller
C—Seal
D—Housing
E—Bearing
F—Internal Snap Ring
G—Shaft
H—External Snap Ring
I—Insert

RG,25,JW7557 –19–02OCT01–1/1

Disassemble Coolant Pump

1. Using appropriate snap ring pliers, remove internal snap ring from front bore of pump housing.

IMPORTANT: If plastic impeller breaks while pressing shaft through impeller, remove brass bushing from shaft before pressing shaft through rest of housing. Use a knife-edge puller to remove bushing.

2. Support nose of coolant pump housing and press shaft through impeller (A) until impeller is free from shaft and bearing/shaft assembly is removed from housing. Discard impeller.

3. Using the appropriate driver from D01045AA Bushing, Bearing and Seal Driver Set, drive or press seal (B) from pump housing.

4. Support inner bearing race and press shaft (C) out of bearing. Discard bearing.

A—Impeller
B—Seal
C—Shaft

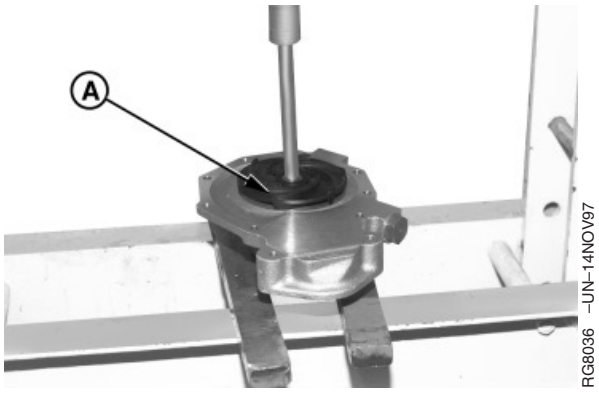

Coolant Pump Housing Shaft and Impeller

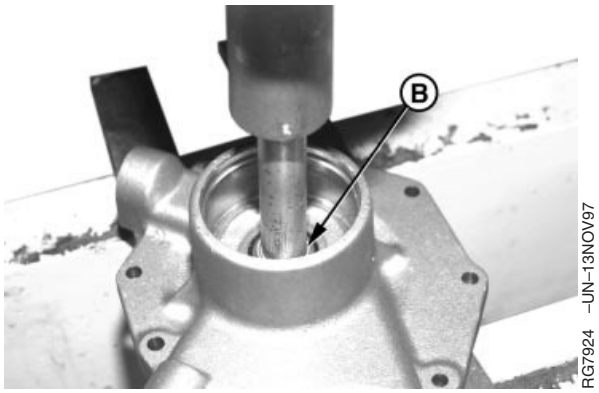

Coolant Pump Housing Seal

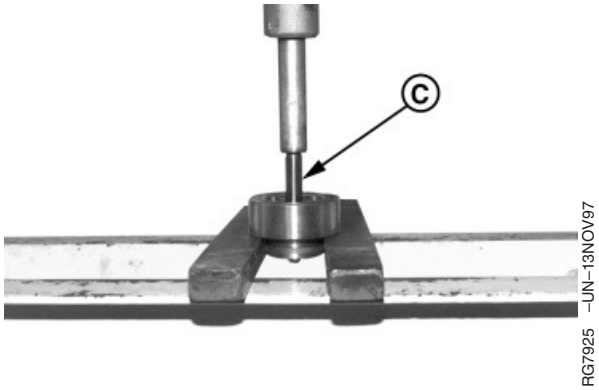

Inner Shaft and Bearing

RG,25,JW7556 –19–02OCT01–1/1

Inspect, Clean, and Measure Coolant Pump Parts

1. Inspect coolant pump housing (A) for cracks or damage.
2. Remove gasket material from housing and clean with solvent. Dry with compressed air.
3. Inspect parts for wear or damage.

Specification	
Coolant Pump Impeller Bore—ID	11.973—11.999 mm (0.4714—0.4724 in.)
Coolant Pump Bearing Shaft (Impeller End)—OD	12.025—12.038 mm (0.4734—0.4739 in.)
Coolant Pump Bearing Shaft (Pulley End)—OD	39.997—40.013 mm (1.5747—1.5753 in.)
Coolant Pump Housing Bearing Bore—ID	61.961—61.987 mm (2.4394—2.4404 in.)

4. Remove foam filters and clean out weep holes in housing. Inspect weep holes for oil or coolant leakage.
   - Oil leakage indicates a damaged sealed bearing (B).
   - Coolant leakage indicates a damaged housing seal (F).

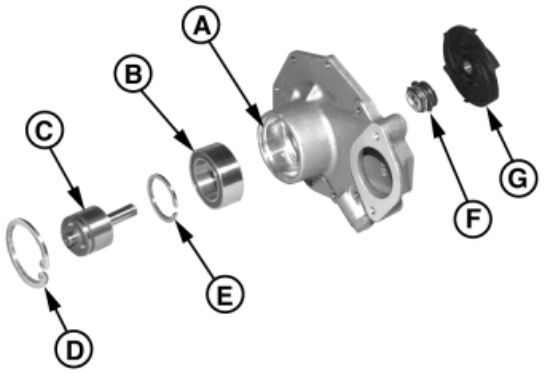

RG7926 –UN–30AUG01

Coolant Pump Assembly



RG7927 –UN–05JAN98

Coolant Pump Housing Weep Hole

A—Housing
B—Bearing
C—Shaft
D—Internal Snap Ring
E—External Snap Ring
F—Seal
G—Impeller

RG,25,JW7555 –19–02OCT01–1/1

Assemble Coolant Pump

1. Thoroughly clean and inspect coolant pump mounting surface in timing gear cover before installing coolant pump assembly.

2. Using appropriate snap ring pliers, install external snap ring (C) into groove in shaft (B).

3. Using appropriate driver which bears on inner bearing race, install bearing (A) onto shaft against snap ring.

IMPORTANT: Do not push against end of bearing shaft. Push against outer race only, when installing bearing and shaft assembly into housing.

4. Using JDG956 Coolant Pump Bearing Installer (D), install bearing and shaft assembly into housing until it bottoms in housing bore.

5. Install large internal snap ring into groove in front bore of pump housing.

NOTE: Coolant pumps have a unitized (one-piece) coolant seal.

6. Using seal installation tool (F) provided in seal kit, install seal (E) (dry) onto coolant pump shaft and into housing until it is firmly seated. Ensure metal cup side of seal faces inward (toward impeller).

A—Bearing
B—Shaft
C—Snap Ring
D—JDG956 Coolant Pump Bearing Installer
E—Seal
F—Seal Installation Tool

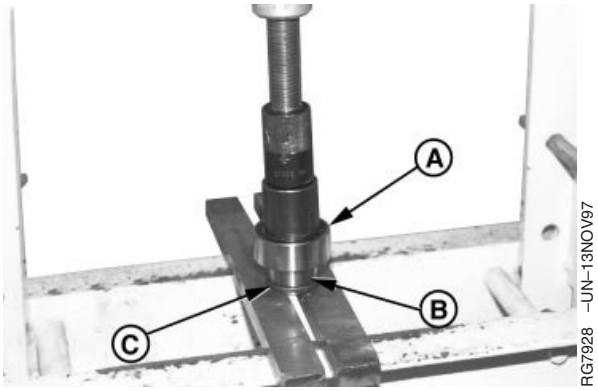

Shaft, Bearing and Snap Ring Assembly

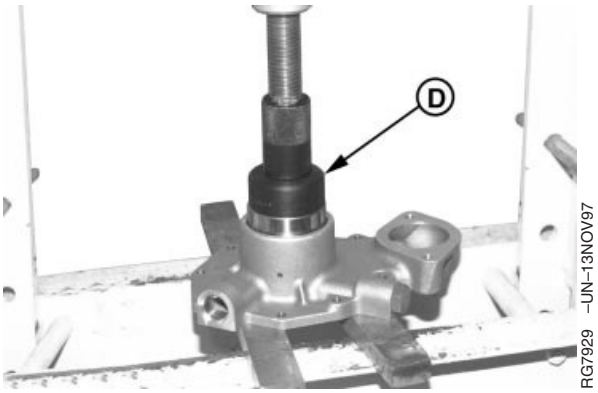

Shaft Assembly in Housing

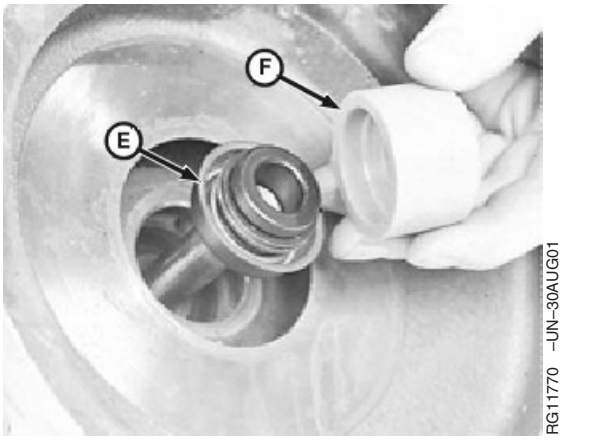

Shaft Seal Installation

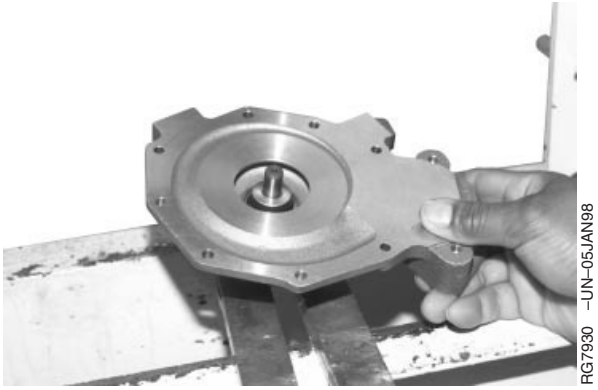

Shaft Seal in Housing

Continued on next page

RG,25,JW7554 –19–02OCT01–1/2

NOTE: Coolant pumps are available with two different types of impellers to ensure adequate coolant flow for a given engine application. Standard flow pumps have fins on both sides of impeller (A). High flow pumps have fins on one side of impeller (B). Be sure to replace impeller with the same type of impeller to ensure proper engine cooling.

7. Support front nose of coolant pump shaft.

IMPORTANT: When installing impeller, press only on brass bushing (C), as impeller could crack.

8. Using an appropriate driver, install impeller onto shaft to the specified dimension below.

Specification	
Coolant Pump Impeller (Standard Flow)—Position	2.17—2.29 mm (0.085—0.090 in.) below end of shaft
Coolant Pump Impeller (High Flow)—Position	Flush ± 0.13 mm (0.005 in.) with end of shaft

9. Rotate impeller a complete revolution by hand and check with feeler gauge for housing-to-impeller clearance.

Specification	
Coolant Pump Housing-to-Impeller—Minimum Clearance	0.27 mm (0.010 in.)

10. Install new foam filters in weep holes.

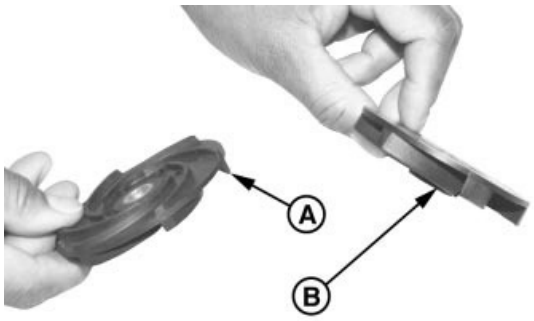

RG7932 –UN–13NOV97

Coolant Pump Impeller Differences

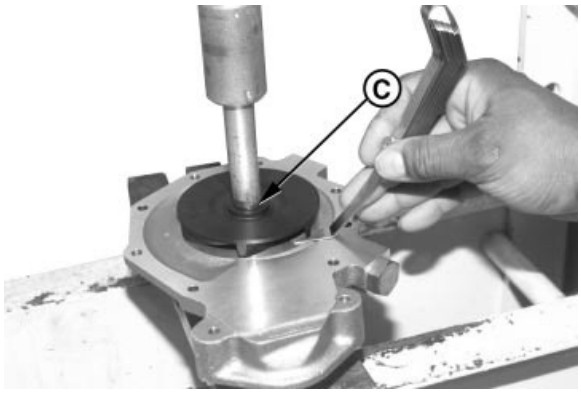

RG7931 –UN–13NOV97

Install Impeller

A—Standard Flow Impeller
B—High Flow Impeller
C—Bushing

RG,25,JW7554 –19–02OCT01–2/2

Install Coolant Pump

IMPORTANT: On engines without coolant pump inserts, a coolant pump insert must be installed before installing coolant pump. Instructions for installation of insert on early timing gear covers are supplied with inserts.

1. Install pulley (B) onto coolant pump (C). Tighten cap screws to specifications.

Specification	
Coolant Pump Pulley Cap Screws—Torque	15 N•m (133 lb-in.)

NOTE: If installing a new coolant pump and insert kit, proper sealant is supplied with kit.

Coolant pump hardware will pull/squeeze the insert onto the timing gear cover.

2. Insure that all mating surfaces are clean. Apply three 2.0 mm—4.0 mm (0.080—0.157 in.) beads PM710XX280 Silicone Sealant to coolant pump cavity in timing gear cover and install coolant pump insert (D). Make sure holes in insert are aligned with holes in timing gear cover.

3. Using a new gasket, install coolant pump (C) over coolant pump insert (D). Install cap screws through coolant pump and coolant pump insert and into the timing gear cover.

4. Tighten cap screws to specification three times by tightening in three clockwise rotations.

Specification	
Coolant Pump-to-Timing Cover Cap Screws—Torque	16 N•m (142 lb-in.)

5. Turn pump shaft by hand to ensure impeller does not contact insert.

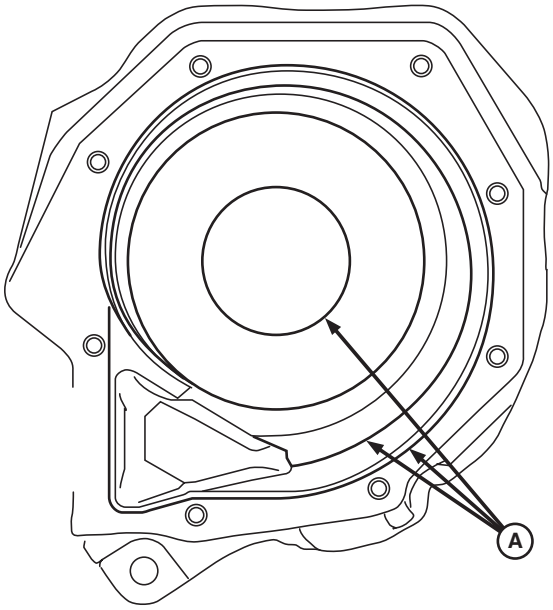

RG11782 –UN–28SEP01

Sealant Pattern

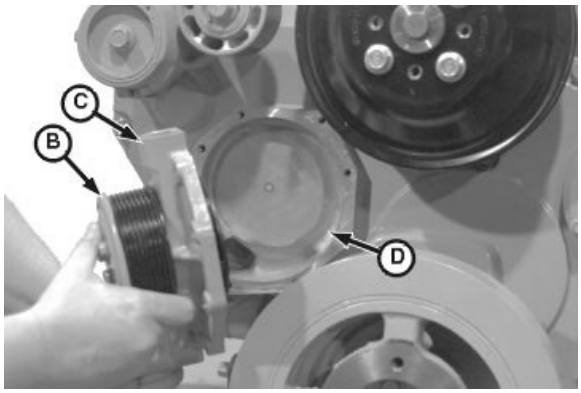

RG11800 –UN–01OCT01

Coolant Pump with Pulley on Timing Gear Cover

A—Sealant
B—Pulley
C—Coolant Pump
D—Coolant Pump Insert

Continued on next page

6. Using a new O-ring, install coolant pump inlet elbow (C), if removed. Tighten cap screws to specifications.

Specification	
Coolant Pump Inlet Elbow Cap Screws—Torque	35 N•m (26 lb-ft)

7. Install poly-vee belt. Be sure that belt is correctly seated in all pulley grooves.

8. Install fan and tighten cap screws with lock washers to the following specification:

Specification	
Fan-to-Pulley Hub M8 Cap Screws—Torque	35 N•m (26 lb-ft)
Fan-to-Pulley Hub M10 Cap Screws—Torque	70 N•m (52 lb-ft)

IMPORTANT: Engine must sit for at least 30 minutes after repairs are completed to allow sealant to set properly before coolant is added.

9. 30 minutes after repairs are completed, fill cooling system with proper coolant. (See Section 01, Group 002.)

IMPORTANT: Air must be expelled from cooling system when refilled. Loosen temperature sending unit fitting at rear of cylinder head or plug in thermostat housing to allow air to escape when filling system. Tighten fitting or plug when all the air has been expelled.

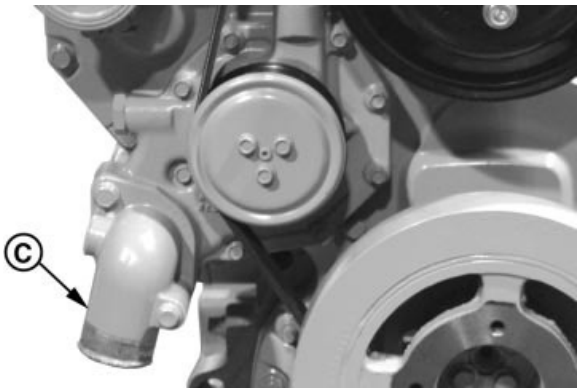

RG7922A –UN–13NOV97

Coolant Pump Inlet Elbow

C—Inlet Elbow

RG,25,JW7553 –19–20NOV03–2/2

Cooling System Deaeration

Deaeration is normally accomplished by the jiggle pin in the thermostat flange. However, a pocket of air can stay on the top rear of the engine. When refilling the cooling system, loosen the coolant temperature sensor (A) or plug at the rear of the cylinder head to allow air to escape.

A—Coolant Temperature Sensor

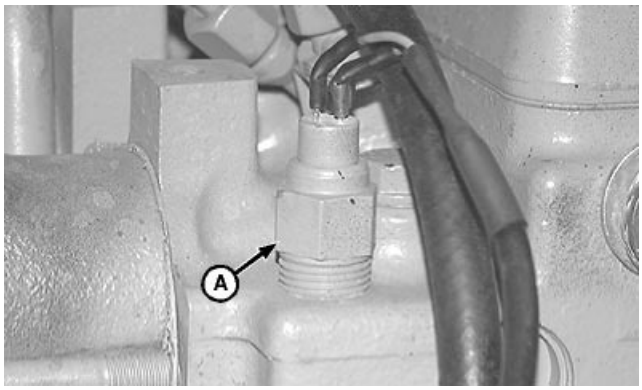

Cooling System Deaeration

DPSG,OUO1004,19 –19–03APR98–1/1

Remove and Install Automatic (Spring) Belt Tensioner

IMPORTANT: Belt tensioner cap screw (A) is left-hand threaded.

1. Release tension on belts using a breaker bar and socket.
2. Remove poly-vee belts from pulleys.
3. Remove belt tensioner and spacer.

A—Belt Tensioner Cap Screw

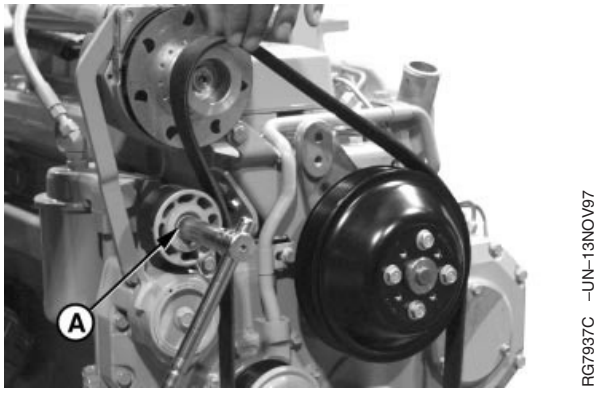

Automatic Belt Tensioner and Belt (Early Version Shown)

Continued on next page

RG,25,JW7552 –19–20NOV03–1/3

4.

B—Sheave
C—Spacer

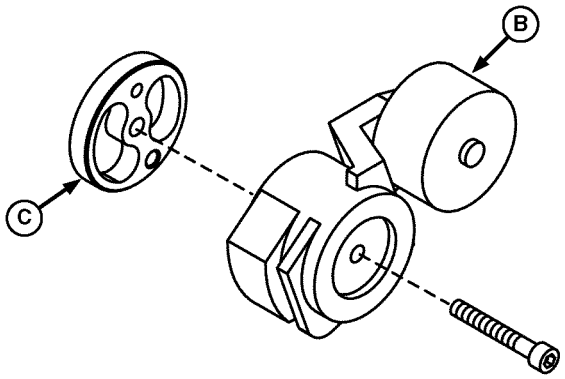

RG12430 –UN–26NOV03

Tensioner Sheave Inspection (Early Version)

RG,25,JW7552 –19–20NOV03–2/3

Inspect sheave (B).

NOTE: Replacement belt tensioner may protrude 20 mm (0.79 in.) more at front of engine. Modify surrounding parts as required to prevent interference.

IMPORTANT: If belt tensioner mounting plate was removed, tighten cap screws to timing gear cover first and then tighten cap screws to engine.

Insure correct spacer (C) is installed. Failure to do so will result in sheave misalignment causing premature belt wear.

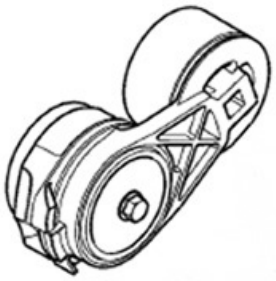

RG14336 –UN–29JUN05

Tensioner (Later Version)

5. Install belt tensioner and spacer (C), and tighten cap screw to specifications.

Specification	
Belt Tensioner-to-Timing Cover and Engine Cap Screws—Torque	50 N•m (37 lb-ft)
Belt Tensioner Pulley Cap Screw—Torque	40 N•m (29 lb-ft)

6. Install poly-vee belts. Be sure that belt is correctly seated in all pulley grooves.

RG,25,JW7552 –19–20NOV03–3/3

Checking Belt Tensioner Spring Tension and Belt Wear

Belt drive systems equipped with automatic (spring) belt tensioners cannot be adjusted or repaired. The automatic belt tensioner is designed to maintain proper belt tension over the life of the belt. If tensioner spring tension is not within specification, replace tensioner.

RG,25,JW7551 –19–20NOV03–1/3

Checking Belt Wear

The belt tensioner is designed to operate within the limit of arm movement provided by the cast stops (A and B) when correct belt length and geometry are used.

1. Visually inspect cast stops (A and B) on belt tensioner assembly.
2. If the tensioner stop on swing arm (C) is hitting the fixed stop (B), check mounting brackets (alternator, belt tensioner, etc.) and the belt length. Replace belt as needed.
3. If the belt shows abnormal side wear, sheaves may be out of alignment. Verify that correct spacer is installed between tensioner mount and timing gear cover.

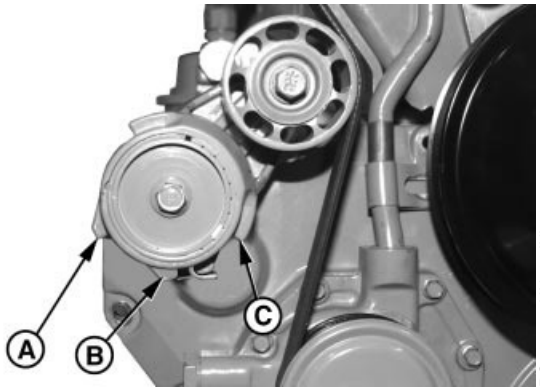

Check Belt Wear

A—Cast Stop
B—Cast Stop
C—Swing Arm

Continued on next page

RG,25,JW7551 –19–20NOV03–2/3

Checking Tensioner Spring Tension

NOTE: While belt is loosened, inspect pulleys and bearings. Rotate and feel for any unusual sounds, loosness, or hard turning. Replace as necessary.

A belt tension gauge will not give an accurate measure of the belt tension when automatic spring tensioner is used. Measure tensioner spring tension using a torque wrench and procedure outlined below:

1. Release tension on belt using a breaker bar and socket on tension arm. Remove belt from pulleys.
2. Release tension on tension arm and remove breaker bar.
3. Put a mark (A) on swing arm of tensioner as shown.
4. Measure 21 mm (0.83 in.) from (A) and put a mark (B) on tensioner mounting base.
5. Install torque wrench (C) so that it is aligned with center of pulley and tensioner. Rotate the swing arm with the torque wrench until marks (A and B) are aligned.
6. Record torque wrench measurement and compare with specification below. Replace tensioner assembly as required.

Specification

Belt Tensioner—Spring Tension ..... 18—22 N•m (13—16 lb-ft)

NOTE: Threads on belt tensioner roller cap screw are LEFT-HAND threads.

A—Mark On Swing Arm
B—Mark On Tensioner Mounting Base
C—Torque Wrench

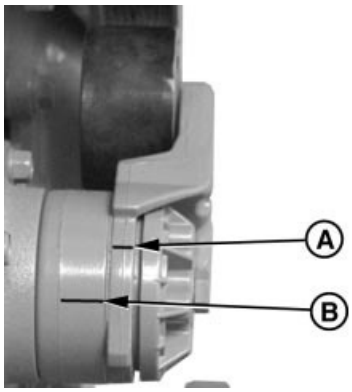

RG7977 –UN–14NOV97

Marks on Tensioner

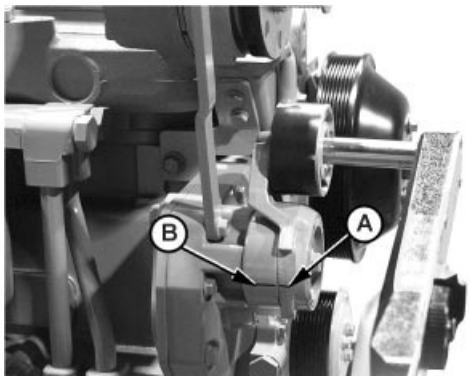

RG12054 –UN–08JAN02

Align Marks

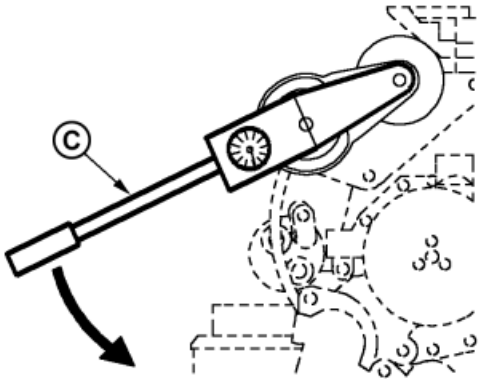

RG12065 –UN–28JAN02

Align Torque Wrench with Pulley and Tensioner

RG,25,JW7551 –19–20NOV03–3/3

Manual Belt Tensioner Adjustment Using Belt Tension Gauge

NOTE: Two types of manual tensioners shown.

While belt is loosened, inspect pulleys and bearings. Rotate and feel for any unusual sounds, loosness, or hard turning. Replace as necessary.

Inspect belts for cracks, fraying, or stretched-out areas. Replace if necessary.

As a reference check, twist belt in the middle of a 254—305 mm (10—12 in.) span with two fingers. A properly tensioned belt will turn 75—85 degrees. If belt turns more, it needs to be tightened. If belt turns less, it needs to be loosened.

NOTE: If timing gear cover or alternator bracket interfere with installation/centering of belt tension gauge (A), install gauge with face toward engine.

1. Install JDG1341 Belt Tension Gauge (A) on belt, halfway between pulleys as shown.
2. Loosen cap screws (B) and (C).
3. Slide alternator or tensioner bracket (D) in slot by hand to remove all excess slack in belt.

IMPORTANT: Do not pry against alternator rear frame.

4. Stretch belt by prying outward on alternator front frame or tensioner bracket. Observing tension gauge, stretch the belt until specified tension is achieved.

8-Rib Poly-Vee Belt—Specification

New Belt—Tension	470—650 N (105—145 lb-force)
Used Belt—Tension	400—580 N (90—130 lb-force)

5. Tighten cap screws (B) and (C).

NOTE: After ten minutes run-in, new belts are considered used. Belt tension must then be rechecked per used belt specifications.

6. Run engine for ten minutes and immediately re-check belt tension per used belt specification above.

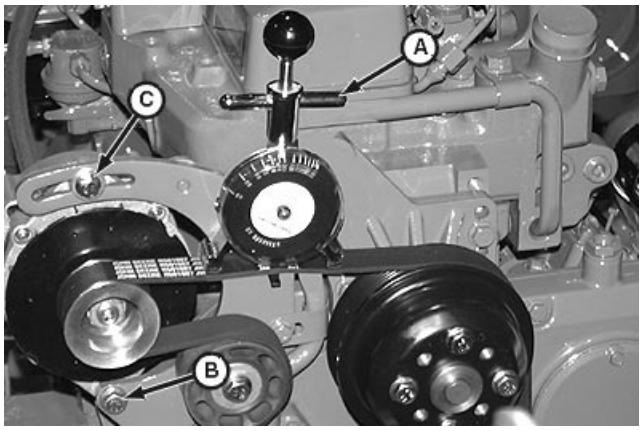

RG10556 –UN–21DEC99

Adjust Belt Tension Using Belt Tension Gauge

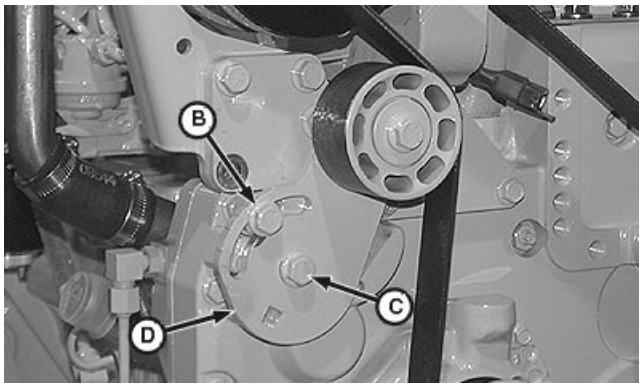

RG10557 –UN–21DEC99

Adjust Belt Tension

A—Belt Tension Gauge
B—Cap Screw
C—Cap Screw
D—Tensioner Bracket

Continued on next page

7. Reset belt tension as necessary.

DPSG,OUO1004,128 –19–02OCT01–2/2

02
070
24

Manual Belt Tensioner Adjustment Using Belt Tension Tool (Alternate Method for Engines without Auxiliary Drive.)

NOTE: The JDG1520 Belt Tension Tool may not be compatible with all alternators. In that case, use the preceeding method for belt tensioning.

NOTE: Inspect belts for cracks, fraying, or stretched-out areas. Replace if necessary.

As a reference check, twist belt in the middle of a 254—305 mm (10—12 in.) span with two fingers. A properly tensioned belt will turn 75—85 degrees. If belt turns more, it needs to be tightened. If belt turns less, it needs to be loosened.

While belt is loosened, inspect pulleys and bearings. Rotate and feel for any unusual sounds, loosness, or hard turning. Replace as necessary.

1. Loosen upper (A) and lower (B) alternator bracket cap screws. Lower cap screw must remain tight enough to prevent excessive alternator play but allow alternator to pivot by hand.

2. Insert JDG1520 Belt Tensioning Tool (C) behind belt (D) and over lower alternator mounting screw.

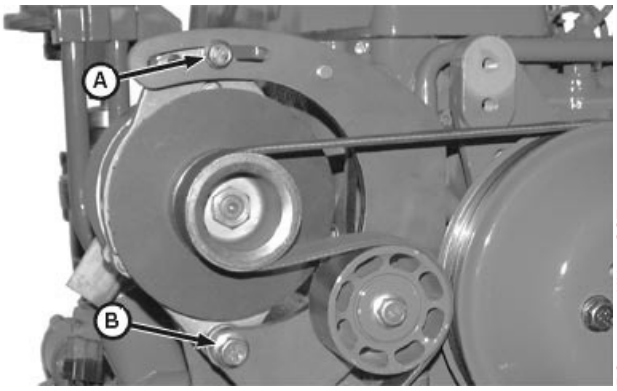

RG11812 –UN–31OCT01

Alternator Bracket and Cap Screws

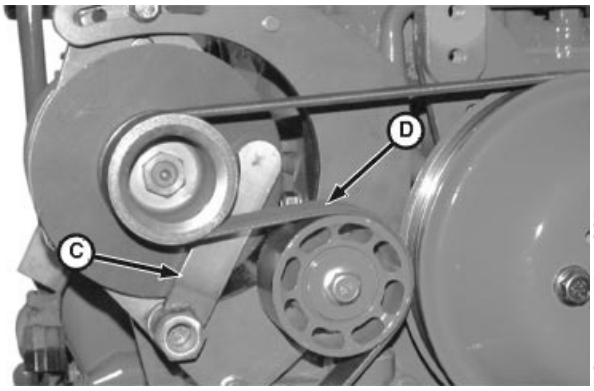

RG11813 –UN–31OCT01

Belt Tensioning Tool

A—Upper Alternator Bracket Cap Screw
B—Lower Alternator Bracket Cap Screw
C—JDG1520 Belt Tensioning Tool
D—Belt

Continued on next page

OUO1040,00001F5 –19–15MAY02–1/2

3. Place torque wrench (C) on belt tensioning tool (B) at 90° to tool. Pivot alternator (A) until desired torque is achieved according to specification using the following table.

8-Rib Poly-Vee Belt—Specification

New Belt—Tension..... 470—650 N (105—145 lb-force)
Used Belt—Tension..... 400—580 N (90—130 lb-force)

JDG1520 Belt Tensioning Tool Torque Table	
Desired Belt Tension N (lb-force)	**Applied Torque N •m (lb-ft)**
445 (100)	108 (80)
489 (110)	115 (85)
534 (120)	122 (90)
623 (140)	135 (100)

4. While holding tension with torque wrench, scribe a reference mark (D) on alternator in line with notch (E) on upper alternator bracket.

5. Continue to hold tension with torque wrench and tighten upper alternator bracket cap screw.

6. Check position of reference mark to see if alternator moved while tightening. If alternator moved, loosen upper alternator bracket cap screw and repeat the tension adjustment procedure.

7. Remove belt tension tool and tighten lower alternator bracket cap screw.

A—Alternator
B—Belt Tensioning Tool
C—Torque Wrench
D—Reference Mark
E—Alternator Upper Bracket Notch

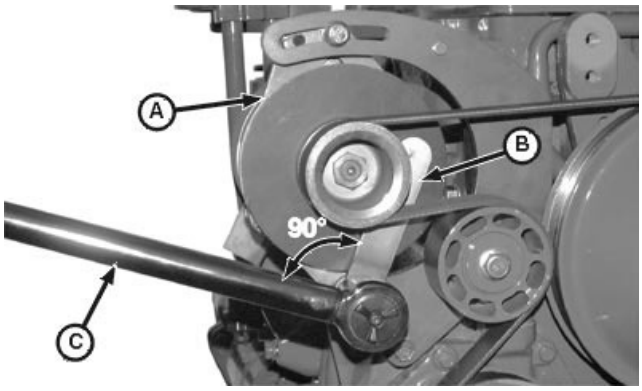

Belt Tensioning Tool and Torque Wrench

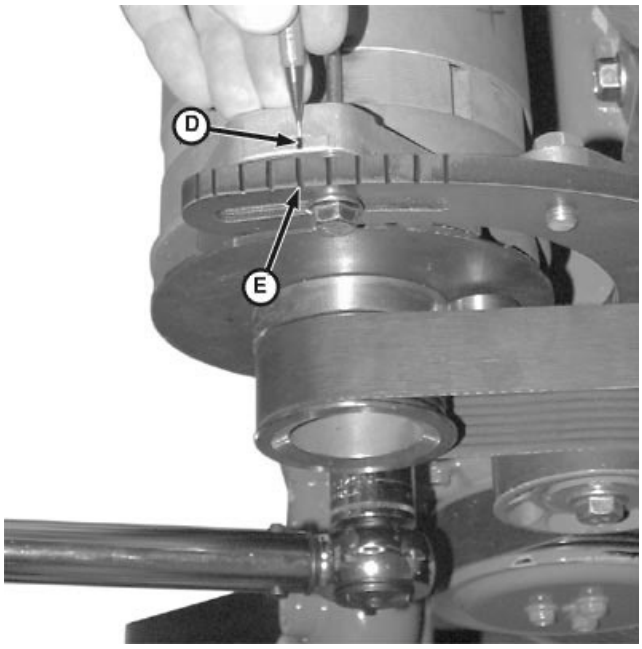

Scribe Reference Mark

OUO1040,00001F5 –19–15MAY02–2/2

Inspect and Install Fan Assembly

Several fan drive ratios are available, allowing a closer matching of fan speed to application.

02
070
26

1. Inspect fan blades for bent or damaged condition. Bent blades reduce cooling system efficiency and throw the fan out of balance. Replace fan if blades are bent or damaged.

NOTE: Engines may be equipped with either suction-type fan or a blower-type fan, depending on application. Take care not to install fan incorrectly. Refer to illustrations to identify fan type and corresponding installation.

2. Install fan on pulley or pulley hub.

   Install blower-type fan with concave side of blade toward radiator.

   Install suction-type fan with concave side of blade toward engine.

   Tighten cap screws (with lock washers) to specifications.

Specification

Fan-to-Pulley Hub M8 Cap Screws—Torque	35 N•m (26 lb-ft)
Fan-to-Pulley Hub M10 Cap Screws—Torque	70 N•m (52 lb-ft)

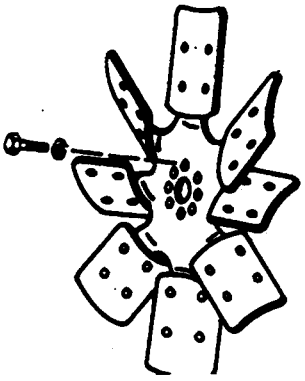

RG4797 –UN–14DEC88

Engine Fan

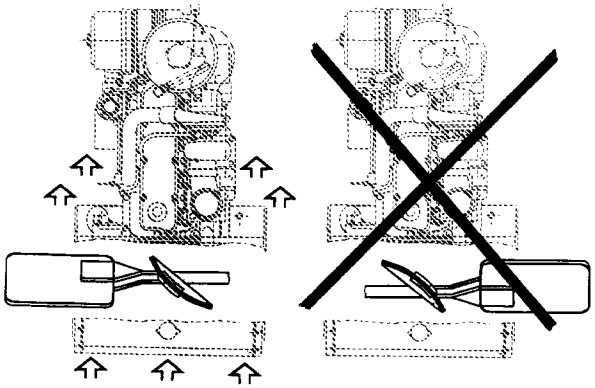

CD30648 –UN–16JUN98

Suction Fan (Top View)

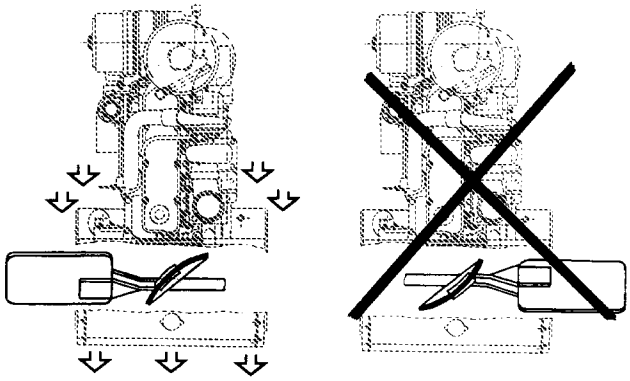

CD30649 –UN–16JUN98

Blower Fan (Top View)

RG,25,JW7550 –19–11NOV99–1/1

Remove and Inspect Fan Drive Assembly

Fan assemblies can be mounted in several positions to accommodate different application and engine cooling requirements.

1. Remove fan.
2. Release tension on belt and remove poly-vee belt from pulleys.
3. Remove fan pulley (A).
4. Inspect pulley and grooves
5. Check run-out of fan hub (C) using a dial indicator on outer face of hub as shown. If run-out exceeds specification, replace fan drive assembly.

Specification

Fan Drive Hub—Radial Runout..... 0.038 mm (0.0015 in.)

NOTE: Cap screw position (B) is used as an example only. Position of fan drive varies by application.

6. Mark cap screw positions (B) on timing gear cover before removal to ensure that fan pulley is installed in same position as removed. This will ensure proper belt tension is achieved.
7. Remove hub (C) and fan drive.

A—Fan Pulley
B—Fan Drive Cap Screw Position
C—Hub

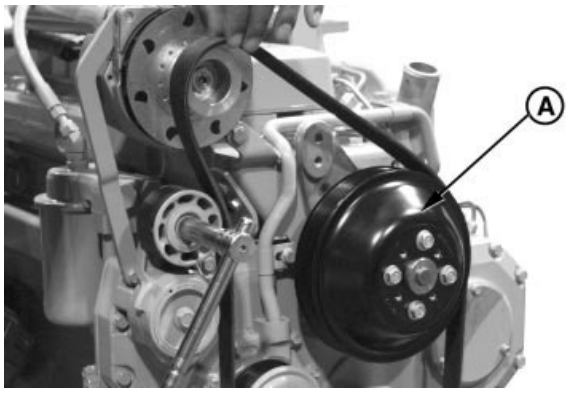

RG7937D –UN–13NOV97

Fan Drive Assembly

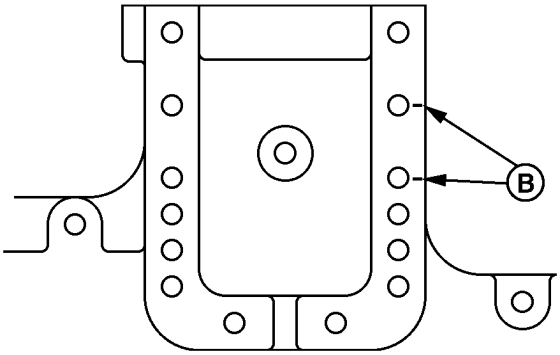

RG8116B –UN–15JAN98

Cap Screw Marking for Installation

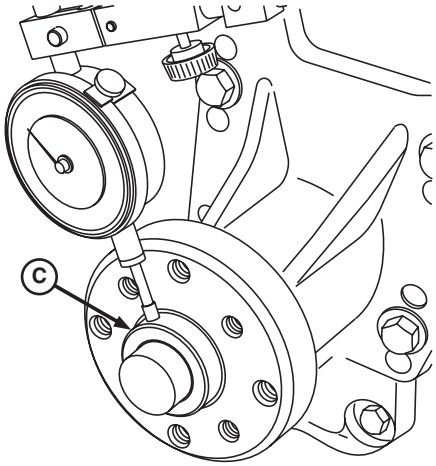

RG12429 –UN–26NOV03

Check Run-Out of Hub and Fan Drive Using Dial Indicator

RG,25,JW7549 –19–20NOV03–1/1

Replace Bearings in Adjustable Fan Drive Assembly

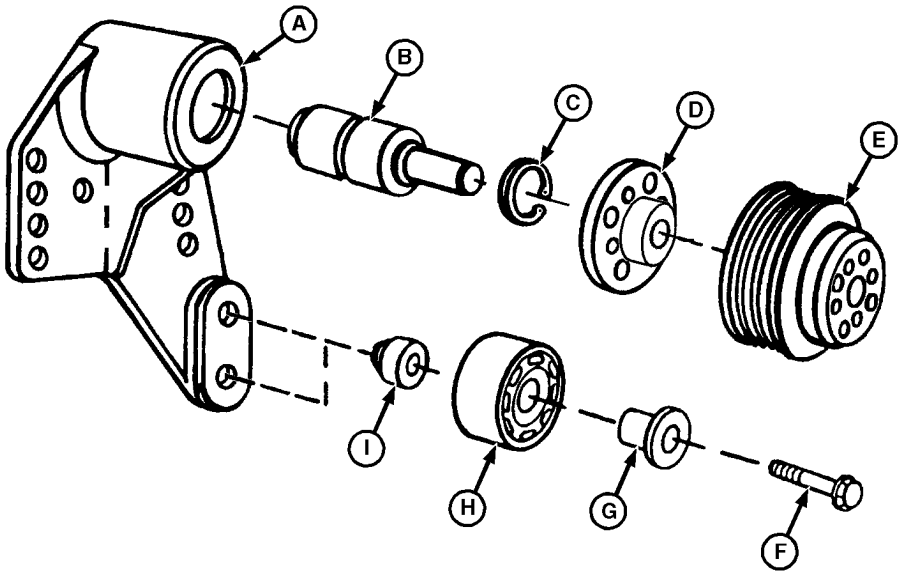

RG9074 –UN–12MAR98

Adjustable Fan Drive Assembly

A—Bearing Housing
B—Bearing/Shaft
C—Snap Ring
D—Hub
E—Pulley
F—Cap Screw
G—Sleeve
H—Idler Pulley
I—Spacer

Disassemble Fan Drive Assembly

NOTE: Some parts in illustration above may not be available separately for service. See parts catalog for service parts/assemblies.

1. Support back side of fan hub (D) and press nose of bearing/shaft (B) out of hub.
2. Remove snap ring (C) from front bore of bearing housing (A).
3. Support front nose of bearing housing and press bearing/shaft out of housing. Discard bearing.
4. Remove parts (F—I) if required.
5. Thoroughly clean and inspect fan hub, bearing housing and idler pulley for cracks or any other damage.
6. Measure parts and compare with specifications given. Replace parts not within specifications.

Fan Drive (Option Codes 2301 and 2302)—Specification

Bearing Housing—ID	38.018—38.038 mm (1.4968—1.4976 in.)
Bearing—OD	38.087—38.100 mm (1.4995—1.5000 in.)
Shaft—OD	18.948—18.961 mm (0.7460—0.7465 in.)
Hub—ID	18.910—18.936 mm (0.7445—0.7455 in.)

Fan Drive (Option Codes 2303, 2304, 2312, 2313, 2314, 2321 and 2341)—Specification

Bearing Housing—ID	47.573—47.599 mm (1.8730—1.8740 in.)
Bearing—OD	47.612—47.625 mm (1.8745—1.8750 in.)
Shaft—OD	25.387—25.400 mm (0.9995—1.0000 in.)
Hub—ID	25.337—25.353 mm (0.9975—0.9985 in.)

Continued on next page

RG,25,JW7548 –19–15MAY02–1/3

Assemble Fan Drive Assembly

1. Support rear face of bearing housing and drive bearing into housing by pressing on outer bearing shell until bearing bottoms in housing bore.
2. Install internal snap ring into front groove of housing bore.
3. Support shaft through rear housing bore and press fan hub onto shaft to dimension (A).

Fan Drive—Specification	
Rear Housing Face-to-Hub Front Face (Option Codes 2301 and 2303)—Distance	110.85—110.87 mm (4.364—4.365 in.)
Rear Housing Face-to-Hub Front Face (Option Codes 2302, 2304, 2312, 2313 and 2314)—Distance	106.65—106.67 mm (4.199—4.200 in.)

A—Dimension

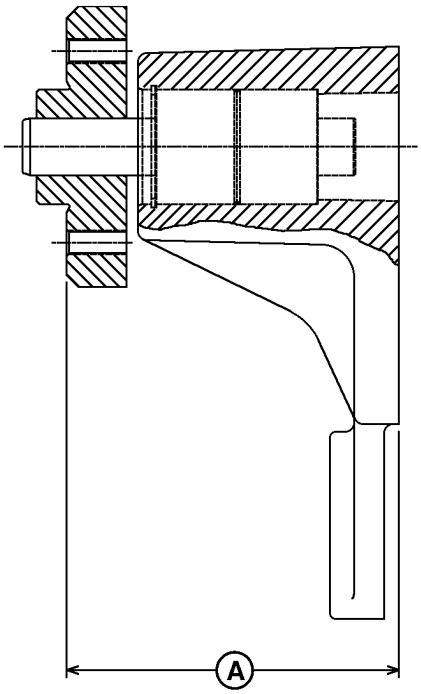

Fan Drive Assembly

Continued on next page

RG,25,JW7548 –19–15MAY02–2/3

4. If idler pulley was removed, reinstall according to following table:

Fan Pulley	Fan Height	Idler Position
168 mm (6.61 in.)	210 mm (8.27 in.)	B
140 mm (5.51 in.)	210 mm (8.27 in.)	A
203.2 mm (8.0 in.)	226 mm (8.9 in.)	B
168 mm (6.61 in.)	226 mm (8.9 in.)	B
140 mm (5.51 in.)	226 mm (8.9 in.)	A
203.2 mm (8.0 in.)	258 mm (10.16 in)	B
168 mm (6.61 in.)	258 mm (10.16 in)	B
140 mm (5.51 in.)	258 mm (10.16 in)	A
203.2 mm (8.0 in.)	290 mm (11.42 in.)	B
168 mm (6.61 in.)	290 mm (11.42 in.)	B
140 mm (5.51 in.)	290 mm (11.42 in.)	A
203.2 mm (8.0 in.)	402 mm (15.83 in.)	D
168 mm (6.61 in.)	402 mm (15.83 in.)	C
140 mm (5.51 in.)	402 mm (15.83 in.)	C

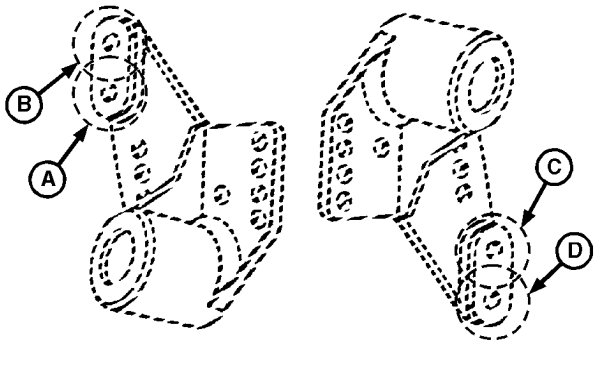

Fan Drive Idler Position

A—Idler Position A
B—Idler Position B
C—Idler Position C
D—Idler Position D

5. Torque idler retaining cap screw to specification.

Specification

Fan Drive Idler Cap Screw—
Torque ..... 50 N•m (37 lb-ft)

RG,25,JW7548 –19–15MAY02–3/3

Replace Bearings in Heavy-Duty, Adjustable Fan Drive Assembly

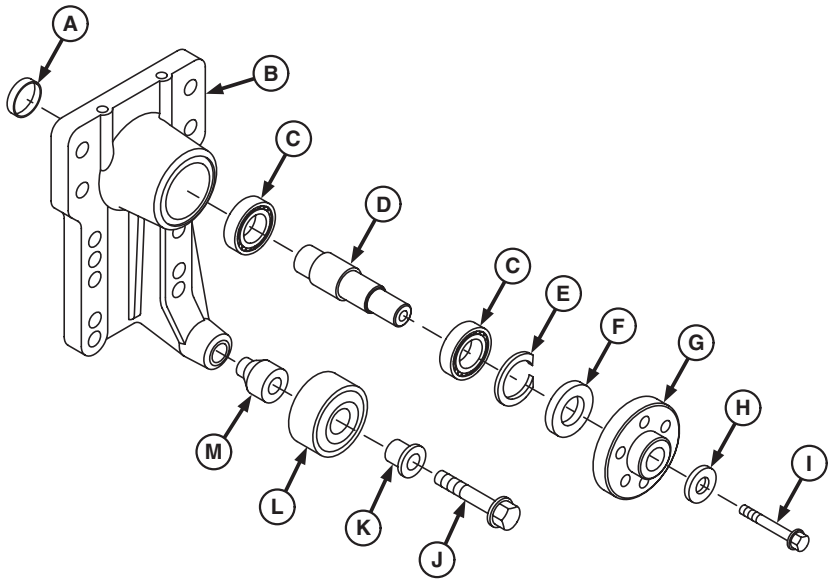

RG12162 –UN–10MAY02

Adjustable Fan Drive Assembly

A—Plug
B—Bearing Housing
C—Bearing
D—Shaft
E—Snap Ring
F—Seal
G—Hub
H—Washer
I—Cap Screw
J—Cap Screw
K—Sleeve
L—Idler Pulley
M—Spacer

Disassemble Fan Drive Assembly

NOTE: See parts catalog for service parts/assemblies.

1. Clamp fan hub (G) in a soft-jawed vise. Support fan drive housing (so it does not fall to floor), and remove cap screw (I) and washer (H) securing hub to shaft (D). Remove fan hub from shaft.
2. Remove and discard grease seal (F) and snap ring (E)
3. Remove plug (A) from rear bore of bearing housing.
4. Remove shaft with bearings (C) by lightly tapping with a rubber mallet or brass hammer.
5. Remove bearings from shaft using a press and discard bearings.
6. Thoroughly clean and inspect shaft and bearing housing (B) for cracks or any other damage.
7. Measure parts and compare with specifications given. Replace parts not within specifications.

Fan Drive (Option Codes 2309 and 2311)—Specification

Bearing Housing—ID	72.005—72.031 mm (2.8348—2.8359 in.)
Bearing—OD	71.987—72.013 mm (2.8341—2.8351 in.)
Shaft—OD	30.218—30.234 mm (1.1897—1.1903 in.)
Hub—ID	30.159—30.185 mm (1.1874—1.1884 in.)

Continued on next page

OUO1080,0000234 –19–08MAY02–1/2

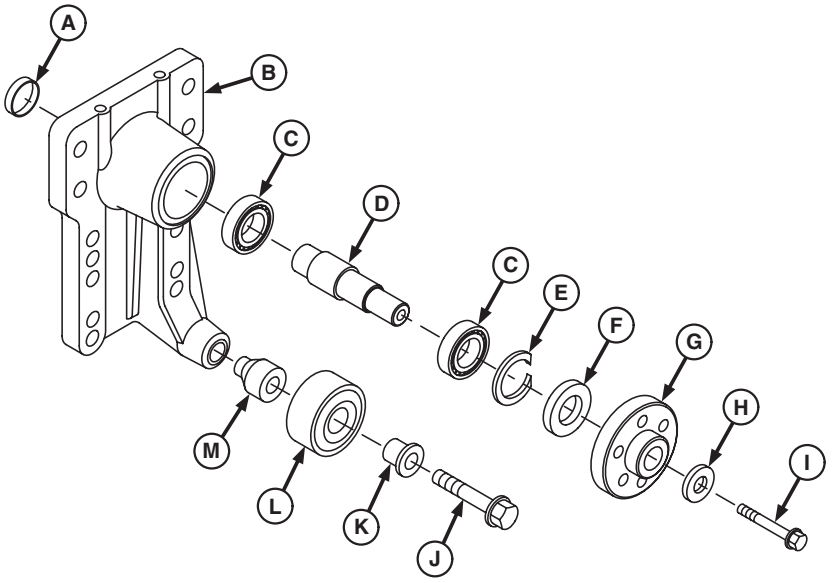

RG12162 –UN–10MAY02

Adjustable Fan Drive Assembly

A—Plug
B—Bearing Housing
C—Bearing
D—Shaft
E—Snap Ring
F—Seal
G—Hub
H—Washer
I—Cap Screw
J—Cap Screw
K—Sleeve
L—Idler Pulley
M—Spacer

Assemble Fan Drive Assembly

1. Pack inner and outer bearings (C) with TY6333 or TY6347 High Temperature Grease. Apply clean engine oil to bearing I.D. and shaft O.D.

IMPORTANT: Apply force to bearing inner race only.

2. Support end of shaft (D) and install bearings against shoulder.
3. Support bearing housing (B) on a firm flat surface with bearing bore in the upward position.
4. Install bearing and shaft assembly into housing.
5. Determine proper snap ring (E) thickness needed to obtain specified end play.

Specification

Fan Drive Shaft—Max. End Play ..... 0.25 mm (0.0098 in.)

6. Install snap ring in housing groove. Visually inspect snap ring installation for proper seating in housing groove.
7. Apply a thin coat of clean engine oil to O.D. of seal (F) and to seal lips. Install seal in housing bore until flush with housing.
8. Install plug (A) in rear of housing to specified height above housing face.

Specification

Fan Drive Housing Plug—Height ..... 5.9—6.5 mm (0.2323—0.2559 in.)

9. Apply clean engine oil to I.D. of fan hub (G) and push onto shaft until it bottoms against shoulder.
10. Install washer (H) and cap screw (I). Tighten cap screw to specifications.

Specification

Fan Hub-to-Fan Shaft—Torque ..... 125 N•m (92 lb-ft)

11. Install idler pulley if removed. Torque idler retaining cap screw to specification.

Specification

Fan Drive Idler Cap Screw—Torque ..... 50 N•m (37 lb-ft)

OUO1080,0000234 –19–08MAY02–2/2

Install Fan Drive Assembly

IMPORTANT: Be sure adjustable fan drive assembly is installed in correct position as removed to ensure proper belt tension.

1. **For engines using poly-vee belts:** If reference marks were not made on timing gear cover during removal of fan drive assembly, use the following table to determine proper fan height.

POLY-VEE BELT (MANUAL TENSIONER)		
4.5 L Fan Belt Option	**Fan Height**	**6.8 L Fan Belt Option**
290 mm (11.42 in.) W/Idler Pulley (A)		
240A, 240B, 240C, 240D		24BK
338 mm (13.31 in.) (A)		
240E		240F
402 mm (15.83 in.) (A)		
240G, 240H, 240J, 24BJ		240K

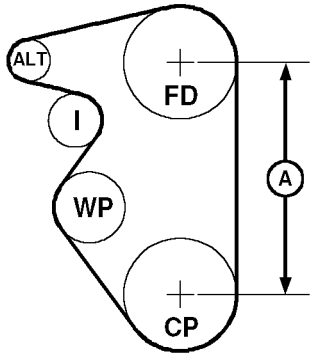

RG10375 –UN–13OCT99

Fan Height (Poly-Vee Belt)

A—Fan Height Distance
ALT—Alternator
CP—Crank Pulley
FD—Fan Drive
I—Idler
WP—Coolant Pump

Continued on next page

RG,25,JW7547 –19–15MAY02–1/4

2. **For engines using poly-rib-belts:** If reference marks were not made on timing gear cover during removal of fan drive assembly, use figure to the right and following table to determine proper fan height.

POLY-RIB BELT		
4.5 L Fan Belt Option	**Fan Height**	**6.8 L Fan Belt Option**
210 mm (8.27 in.) W/Idler Pulley (A)		
24AG, 24AH, 24AJ, 24AK, 24AL, 24AM		24AJ, 24AN
226 mm (8.9 in.) W/Idler Pulley (A)		
2406, 2408, 2415, 2435, 2436, 2461, 240P, 240Q		2401, 2402, 2403, 2405, 2407, 2412, 2471, 2472, 2473, 2474, 240T, 240W
258 mm (10.16 in.) W/Idler Pulley (A)		
24AR, 24AT		24BT
290 mm (11.42 in.) W/Idler Pulley (A)		
2404, 2407, 2409, 2410, 2411, 2412, 2437, 2439, 2440, 2458, 2459, 2460, 2462, 240U		2409, 2411, 2413, 2414, 2415, 2435, 2438, 2475, 2476, 240R, 240S, 240V
338 mm (13.31 in.) (B)		
2416, 2417, 2419, 2420, 2421, 2423, 2424, 2442, 2443, 2463, 2466, 2468		2416, 2418, 2420, 2421, 2422, 2423, 2424, 2441, 2477, 2478, 2479, 2482
402 mm (15.83 in.) (B)		
2426, 2428, 2430, 2431, 2432, 2444, 2445, 2464, 2465, 2469, 2470		2417, 2419, 2425, 2427, 2429, 2480
402 mm (15.83 in.) W/Idler Pulley (C)		
2434, 2446		2433

A—Fan Height Distance
B—Fan Height Distance
C—Fan Height Distance
ALT—Alternator
CP—Crank Pulley
ACC—Air Conditioning Compressor
FD—Fan Drive
I—Idler
T—Tensioner
WP—Coolant Pump

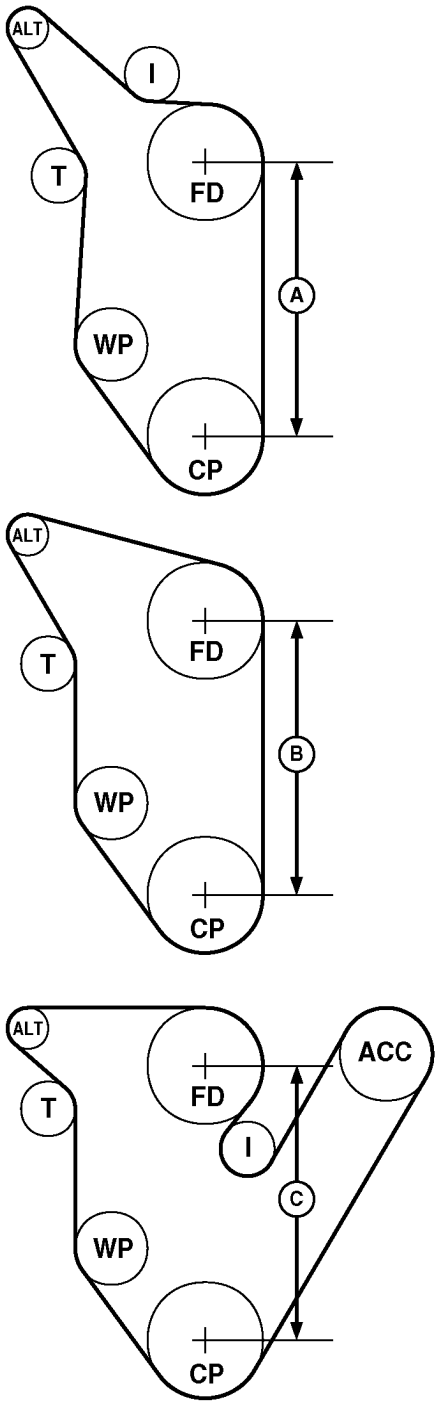

RG9128 –UN–01JUL98

Fan Height (Poly-Rib Belt)

Continued on next page

RG,25,JW7547 –19–15MAY02–2/4

NOTE: Cap screw position (A) is used as an example only. Position of fan drive varies by application.

3. Install hub (C) with fan drive assembly, in positions (A) marked during disassembly, and tighten cap screws to specifications.

Specification	
Fan Drive Assembly-to-Timing Cover Cap Screws—Torque	70 N•m (52 lb-ft)

A—Cap Screw Position
C—Fan Drive Hub

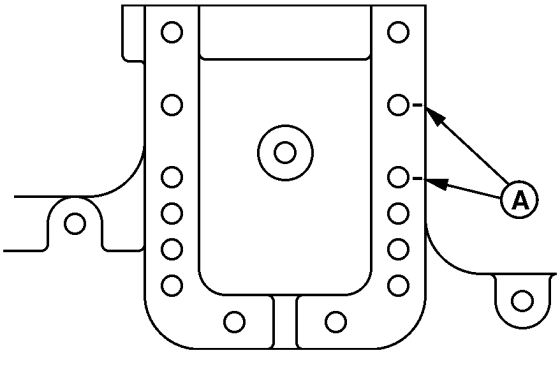

Fan Drive Mounting

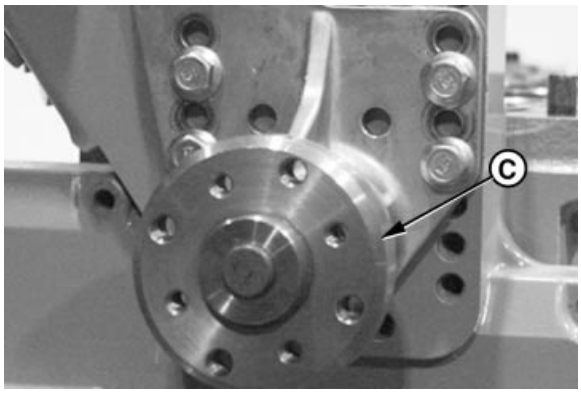

Fan Drive Hub

RG,25,JW7547 –19–15MAY02–3/4

4. Install fan pulley (C) and tighten cap screws to specifications.

Specification	
Fan Pulley-to-Pulley Hub M8 Cap Screws—Torque	35 N•m (26 lb-ft)
Fan Pulley-to-Pulley Hub M10 Cap Screws—Torque	70 N•m (52 lb-ft)

5. Install poly-vee belt. Be sure belt is correctly seated in all pulley grooves.

C—Fan Pulley

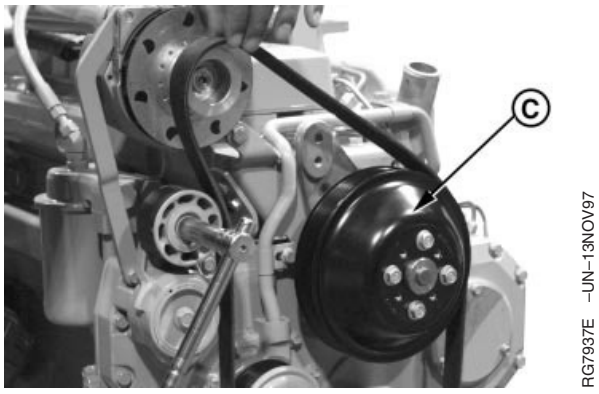

Fan Pulley

RG,25,JW7547 –19–15MAY02–4/4

Remove and Install Fan Drive Assembly (2254 Combine)

02
070
36

1. Remove parts (A—E) and (H—N) as required.
2. Inspect and replace parts as necessary.
3. Press bearing shaft (A) into fan bracket (B) until bearing face is flush with bracket end face.
4. Place fan bracket under a press so that the thrust, when pressing on pulley, is received only by the bearing shaft end (F). Press pulley until distance (G) is obtained.

Specification

Rear Housing Face-to-Hub Front Face—Distance	123.5 mm (4.862 in.)

5. Install fan bracket on engine and tighten hardware to specifications.

Fan Drive Assembly (2254 Combine)—Specification

Fan Idler Axle Shaft-to-Block (D)—Torque	340 N•m (251 lb-ft)
Fan Idler-to-Shaft Retaining Nut (J)—Torque	225 N•m (166 lb-ft)
Fan Drive Bracket-to-Block Cap Screw (K)—Torque	340 N•m (251 lb-ft)
Fan Drive Bracket-to-Cylinder Head Cap Screws (M)—Torque	140 N•m (103 lb-ft)
Upper Fan Drive Bracket-to-Lower Bracket Cap Screws/Nuts (L)—Torque	140 N•m (103 lb-ft)

A—Bearing Shaft
B—Fan Bracket
C—Pulley
D—Idler Axle Shaft
E—Idler
F—Bearing Shaft End
G—Distance for Pulley Installation
H—Spacer
J—Nut
K—Screw
L—Nut
M—Cap Screw
N—Spacer

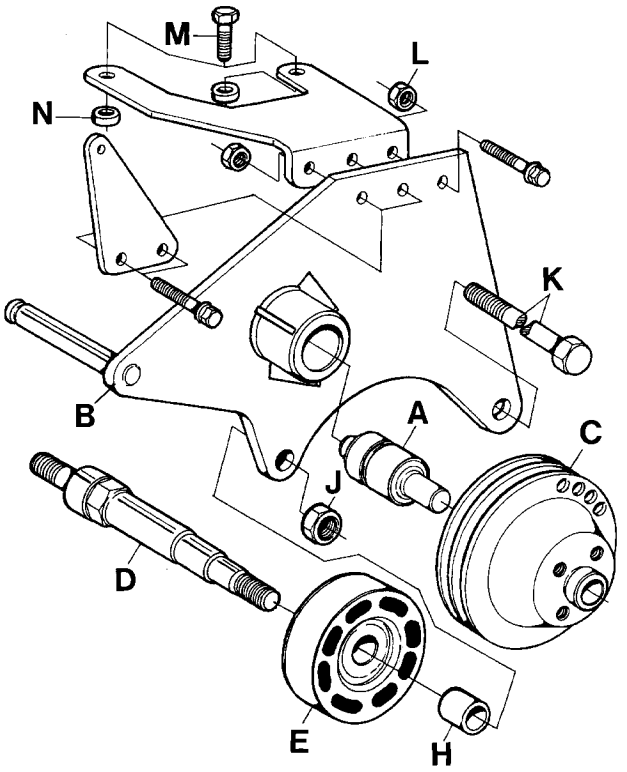

CD30795 –UN–15NOV99

Fan Drive Assembly

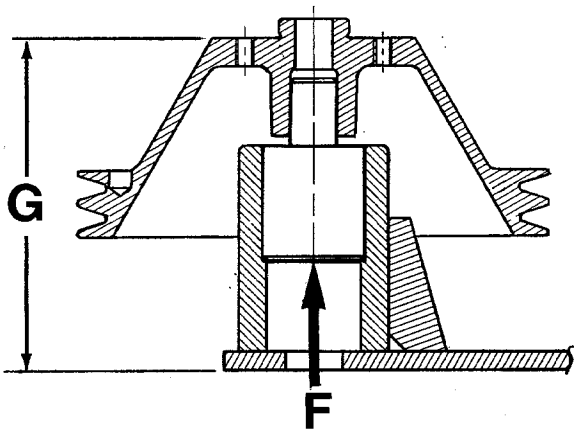

CD30722 –UN–22FEB99

Pulley-to-Bracket Distance

DPSG,OUO1004,2508 –19–05JAN00–1/1

Remove and Install Coolant Heater (If Equipped)

CAUTION: To avoid shock or hazardous operation, always use a three-wire heavy-duty electrical cord equipped with three-wire connectors. If a two-to-three contact adapter is used at the wall receptacle, always connect green wire to a good ground. Keep electrical connectors clean to prevent arcing. Only plug coolant heater into electrical power if heating element is immersed in coolant. Sheath could burst and result in personal injury.

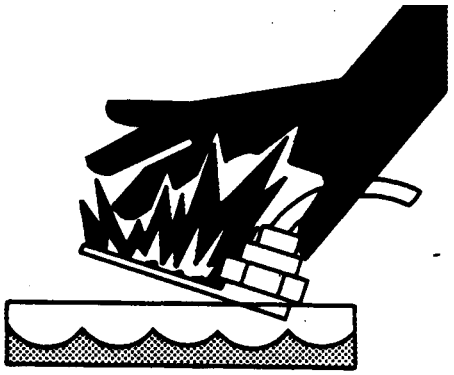

TS210 –UN–23AUG88

Electrical Shock Safety

1. Unplug heater from electrical power source.
2. Drain cooling system.
3. Disconnect cord (A) from heater assembly.
4. Loosen retaining nut (C) and remove adapter (D) and heater element from block.
5. Inspect and replace parts as necessary.

NOTE: The heater element (G) cannot be repaired. Replace if defective.

6. Install a new gasket (E). Apply JDT308 Soap Lubricant to new O-ring (F) and install.
7. Install heater element through adapter (D) and install nut (C) loosely.
8. Install heater into cylinder block with element pointing to the rear.
9. Tighten adapter (D).
10. Turn element clockwise and then counterclockwise until element contacts casting. Move element midway between contact points.
11. Hold element with a wrench and tighten retaining nut (C) to specifications.

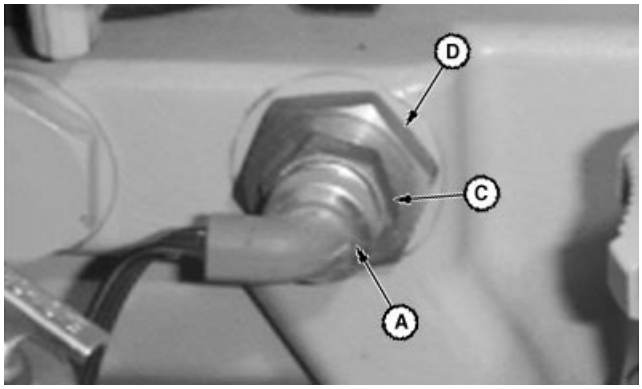

RG9082 –UN–12MAR98

Coolant Heater

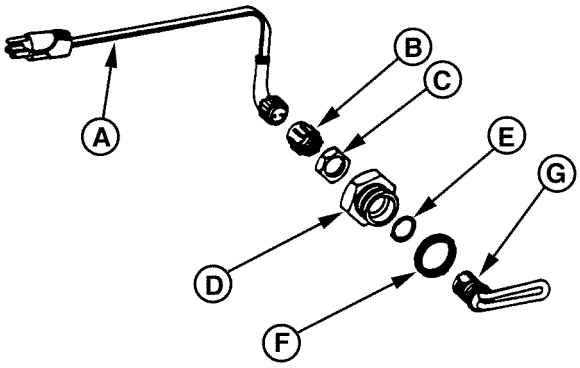

RG5619 –UN–31OCT97

Coolant Heater

A—Cord
B—Dust Cover
C—Retaining Nut
D—Adapter
E—Gasket
F—O-Ring
G—Heater Element

Specification

Coolant Heater Lock Nut—Torque..... 35 N•m (26 lb-ft)

Continued on next page

NOTE: If heater has been ordered as an attachment only, it will include a dust cover (B). The cover is used to protect the electrical connectors when cord assembly (A) has been removed.

12. Install cord.
13. Service engine with coolant.

RG,25,JW7546 –19–19NOV03–2/2

Remove and Install Cold Start Advance Switch (If Equipped)

1. Drain coolant from thermostat housing.
2. Disconnect connector (A) and remove switch (B).
3. Install switch with new O-ring in thermostat housing and tighten to specifications.

Specification

Cold Start Switch—Torque..... 5 N•m (44 lb-in.)

4. Connect harness connector.

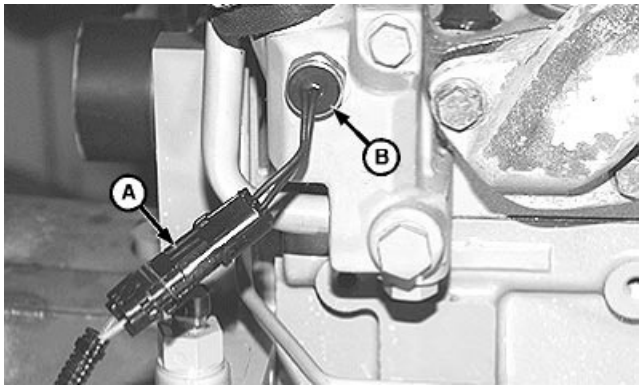

Cold Start Switch

A—Connector
B—Switch

DPSG,OUO1004,1062 –19–29SEP99–1/1

Extending Turbocharger Life

Turbochargers are designed to last the life of the engine, but because they operate at such high speeds (100,000 rpm or more), a moment's carelessness can cause them to fail in seconds.

The major causes of turbocharger failures are attributed to:

- Lack of lube oil (quick starts and hot shutdowns)
- Oil contamination
- Ingestion of foreign objects
- Restricted oil drainage
- Low oil level
- Operation on excessive side slopes
- Abnormally high exhaust temperatures

Lack of Lube Oil

Oil not only lubricates the turbocharger's spinning shaft and bearings, it also carries away heat. When oil flow stops or is reduced, heat is immediately transferred from the hot turbine wheel to the bearings, which are also heating up because of the increased friction due to the lack of oil. This combination causes the turbocharger shaft temperature to increase rapidly.

If oil flow does not increase and the process continues, bearings will fail. Once the bearings fail (which can happen in just seconds), seals, shaft, turbine and compressor wheels can also be damaged.

The principal causes of turbocharger bearing lubrication problems are low oil pressure, a bent, plugged or undersized oil lube supply line, plugged or restricted oil galleries in the turbocharger, or improper machine start-up and shutdown procedures.

Oil levels and pressure should always be closely monitored and all worn hoses and lines should be replaced. The turbocharger oil supply line should be checked frequently to make sure it is not kinked or bent, and it should always be replaced with a line of equal size, length and strength.

The easiest way to damage a turbocharger is through improper start-up and shutdown procedures. Always idle the engine for at least 30 seconds (no load) after start-up and before shutdown. Warming the engine up before applying a load allows oil pressure to build up and lines to fill with oil.

Idling the engine before shutdown allows the engine and turbocharger to cool. "Hot" shutdowns can cause the turbocharger to fail because, after high-speed operation, the turbocharger will continue to rotate long after the engine has been shut off and oil pressure has dropped to zero. This will cause heat to build up and possible bearing damage. It can also cause carbon and varnish deposits to form.

Oil Contamination

A second cause of turbocharger failures is contaminated oil. It can be caused by a worn or damaged oil filter or not changing the lube oil at recommended intervals. Expecting the oil filter to remove dirt, sand, metal chips, etc., from the oil before they reach the engine or turbocharger can be a costly mistake because contaminated oil may completely bypass the engine oil filter if the oil filter or oil cooler is clogged, if the filter element is improperly installed, or if the oil is thick during cold weather.

Four good ways of avoiding oil contamination are:

- Always inspect the engine thoroughly during major overhaul. Look especially for any sludge or debris left in lube oil galleries.
- Change lube oil at recommended intervals. Analysis of oil samples at filter change periods can help identify potentially harmful contaminants in the oil.
- Clean the area around the oil fill cap before adding oil.
- Use a clean container when adding oil.

Continued on next page

Ingestion of Foreign Objects

A third cause of turbocharger damage is the ingestion of foreign objects. Foreign objects or particles can be ingested and cause damage to the turbocharger on both compressor and turbine sides. This is easy to avoid.

On the compressor side, foreign objects usually take the form of dust, sand, or shreds of air cleaner element that enter through improperly installed air cleaner elements. Leaky air inlet piping (loose clamps or torn rubber joints) or torn pleats in dry-type air cleaner elements also create problems.

The result is erosion of compressor blades that can cause the delicately balanced wheel to wobble.

IMPORTANT: Whenever an internal engine failure (valve, valve seat, piston) occurs, a thorough inspection of the turbocharger MUST BE performed before returning engine to service.

Restricted Oil Drainage

A fourth cause of turbocharger damage is restricted lube oil drainage. The lubricating oil carries away heat generated by friction of the bearings and from the hot exhaust gases. If drainage back to the sump is impeded, the bearings will overheat with damage that will ultimately lead to failure.

There are two primary reasons for restricted drainage. A blocked drain tube, due to either damage or a buildup of sludged oil, or high crankcase pressure, which can be due to restricted crankcase breather or excessive engine blow-by.

Periodically check both the turbocharger oil drain tube and engine breather tube for damage or restriction. Correction of these conditions leads to longer turbocharger life.

Abnormally High Exhaust Temperatures

A fifth cause of turbocharger damage is abnormally high exhaust temperatures. Elevated exhaust temperatures cause coking of oil which can lead to bearing failure. Extreme over-temperature operation can cause wheel burst.

There are two basic causes of over-temperature. The first is restricted air flow and the second is overpowering the engine. In either case the engine has more fuel than available air for proper combustion; this overfueled condition leads to elevated exhaust temperatures.

Causes of restricted air flow can include damaged inlet piping, clogged air filters, excessive exhaust restriction, or operation at extreme altitudes. Overpowering generally is due to improper fuel delivery or injection timing. If overtemperature operation has been identified, an inspection of the air inlet and exhaust systems should be performed. Also, check the fuel delivery and timing.

RG,30,JW7583 –19–20NOV97–2/2

Remove Turbocharger

CAUTION: After operating engine, allow exhaust system to cool before removing turbocharger.

IMPORTANT: When cleaning turbocharger, do not spray directly into compressor cover or turbine housing. If turbocharger inspection is required, do not clean exterior prior to removal. Doing so may wash away evidence of a potential failure mode. See TURBOCHARGER INSPECTION later in this group.)

1. Thoroughly clean exterior of turbocharger and surrounding area to prevent entry of dirt into the air intake system during removal.
2. Remove air intake hose and exhaust elbow (shown removed). Loosen hose clamp (A).
3. Disconnect oil inlet line (B) and oil return pipe (C) from turbocharger (D).

A—Hose Clamp
B—Oil Inlet Line
C—Oil Return Pipe
D—Turbocharger
E—Actuator
F—Actuator Coolant Inlet
G—Actuator Coolant Outlet

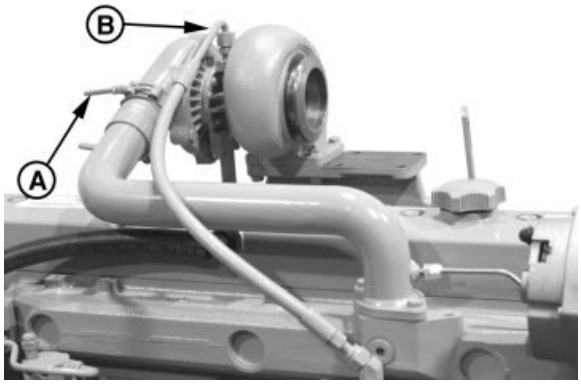

Remove Turbocharger

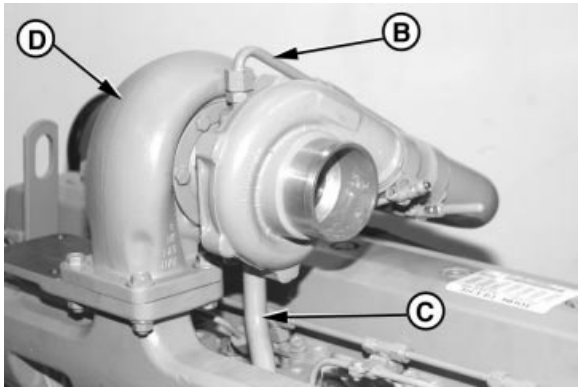

Disconnect Turbocharger Lines

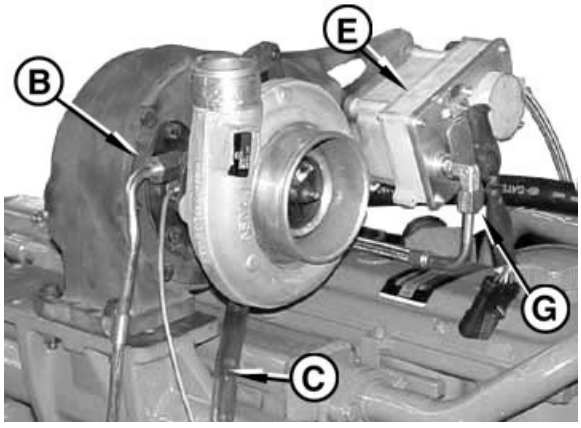

Remove VG Turbocharger

Continued on next page

RG19661,0000003 –19–15JUN05–1/2

4. Disconnect turbocharger actuator inlet and outlet lines. Disconnect wiring sensor leads.

5. Remove mounting cap screws and nuts and lift turbocharger from exhaust manifold. Remove stainless steel gasket. Some engines equipped with EGR cooler may require removal to access mounting hardware.

6. Place turbocharger on a clean flat surface. Cap or plug all air intake and exhaust openings.

7. Perform turbocharger inspection as described later, if failure mode has not yet been determined. (See TURBOCHARGER INSPECTION in this group.)

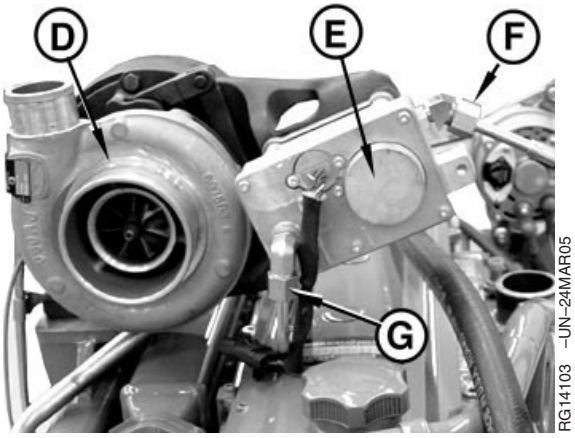

Disconnect VG Turbocharger Actuator Coolant Lines

A—Hose Clamp
B—Oil Inlet Line
C—Oil Return Pipe
D—Turbocharger
E—Actuator
F—Actuator Coolant Inlet
G—Actuator Coolant Outlet

RG19661,0000003 –19–15JUN05–2/2

Turbocharger Failure Analysis

The following is a guide for diagnosing the cause of turbocharger failures after removal from the engine.

Problem	Possible Cause	Suggested Remedy
COMPRESSOR HOUSING INLET DEFECTS		
Foreign Object Damage	Objects left in intake system.	Disassemble and inspect intake system for foreign objects (this group). Inspect engine for internal damage.
	Leaking and/or defective intake system.	Inspect air intake system connections including air filter; repair as required (this group). Inspect air intake related engine components.
Compressor Wheel Rub	Bearing failure.	Determine if engine and/or operator contributed to lack of lubrication, contaminated lubrication, excessive temperature, or debris generating engine failure in progress. Correct as required.
	Manufacturing defects.	Correct as required (this group).
COMPRESSOR HOUSING OUTLET DEFECTS		
Oil and/or Dirt in Housing	Restricted air intake system. Prolonged periods of low rpm engine idling. Defective oil seal ring. Restricted oil drain line.	Inspect and clean air cleaner. Check with operator to confirm conditions. (See Operator's Manual.) Repair as required (this group). Inspect and clear oil drain line as required.
TURBINE HOUSING INLET DEFECTS		
Oil in Housing	Internal engine failure. Oil leaking from compressor housing seal.	Inspect and repair engine as required. Verify that oil is in compressor housing and refer to "Compressor Housing Outlet Defects" as listed earlier in this chart.
Center Wall Deteriorated	Excessive operating temperature.	Check for restricted air intake. Check engine for overfueling. Check injection pump timing.

Continued on next page

RG,RG34710,1258 –19–23OCT97–1/2

TURBINE HOUSING OUTLET DEFECTS

Turbine Wheel Rub	Bearing failure.	Determine if engine and/or operator contributed to lack of lubrication, contaminated lubrication, excessive temperature, or debris generating engine failure in progress. Correct as required.
	Manufacturing defect.	Correct as required (this group).
Foreign Object Damage	Internal engine failure.	Inspect and repair engine as required.
	Objects left in intake system.	Disassemble and inspect air intake system (this group).
	Leaking air intake system.	Correct as required (this group).
Oil and/or Excessive Carbon	Internal engine failure.	Verified by oil in turbine housing. Correct as required.
	Turbine seal failure.	Inspect for excessive heat from overfueling and/or restricted air intake.
	Prolonged periods of low rpm engine idling.	Ask operator to run engine under load or at a higher rpm (see Operator's Manual).
	Restricted oil drain line.	Inspect and clear oil drain line as required.

EXTERNAL CENTER HOUSING AND JOINT DEFECTS

Leaks from Casting	Defective casting.	Replace turbocharger (this group).
	Defective gasket.	Verify if leaks are occurring at gasket joints.
Leaks from Joints	Loose attaching screws.	Tighten to specifications (this group).
	Defective gasket.	Inspect and repair as required.

INTERNAL CENTER HOUSING DEFECTS

Excessive Carbon Build-Up in Housing or on Shaft	Hot engine shutdown.	Review proper operation with operator as shown in operator's manual.
	Excessive operating temperature.	Restricted air intake; overfueling or mistimed engine.
	Restricted oil drain line.	Inspect and clean oil drain lines as required.
	Operating engine at high speeds and loads immediately after start-up.	Idle engine for a few minutes to allow oil to reach bearings before applying heavy loads.

RG,RG34710,1258 –19–23OCT97–2/2

Turbocharger Inspection

The following inspection procedure is recommended for systematic failure analysis of a suspected failed turbocharger. This procedure will help to identify when a turbocharger has failed, and why it has failed, so the primary cause of the failure can be corrected.

Proper diagnosis of a non-failed turbocharger is important for two reasons. First, identification of a non-failed turbocharger will lead to further investigation and repair of the cause of a performance complaint.

Second, proper diagnosis eliminates the unnecessary expense incurred when a non-failed turbocharger is replaced.

The recommended inspection steps, which are explained in detail on following pages, are:

- Compressor Housing Inlet and Compressor Wheel.
- Compressor Housing Outlet.
- Turbine Housing Inlet.
- Turbine Housing Outlet and Turbine Wheel.
- External Center Housing and Joints.
- Perform Axial Bearing End Play Test

NOTE: To enhance the turbocharger inspection, an inspection sheet (Form No. DF-2280 available from Distribution Service Center—English only) can be used that lists the inspection steps in the proper order and shows potential failure modes for each step. Check off each step as you complete the inspection and record any details or problems obtained during inspection. Retain this with the work order for future reference.

Continued on next page

RG,30,JW7574 –19–19SEP01–1/12

Compressor Housing Inlet and Compressor Wheel

1. Check compressor inlet and compressor wheel (A) for foreign object damage.

NOTE: Foreign object damage may be extensive or minor. In either case, the source of the foreign object must be found and corrected to eliminate further damage.

2. Mark findings on your checklist and continue the inspection.

A—Compressor Wheel

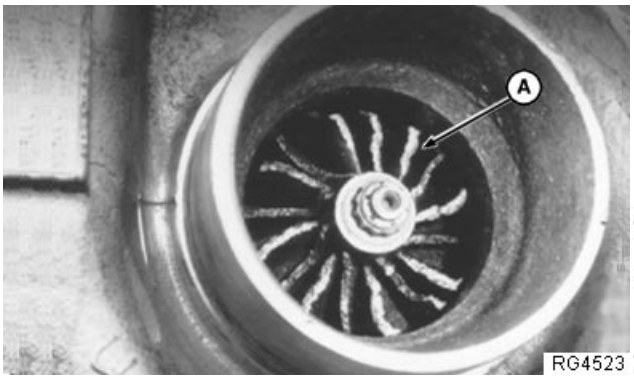

Checking Inlet and Compressor Wheel

RG,30,JW7574 –19–19SEP01–2/12

NOTE: You will need a good light source for this check.

3. Check compressor inlet for wheel rub on the housing (arrow). Look very closely for any score marks on the housing itself and check the tips of the compressor wheel blades for damage.

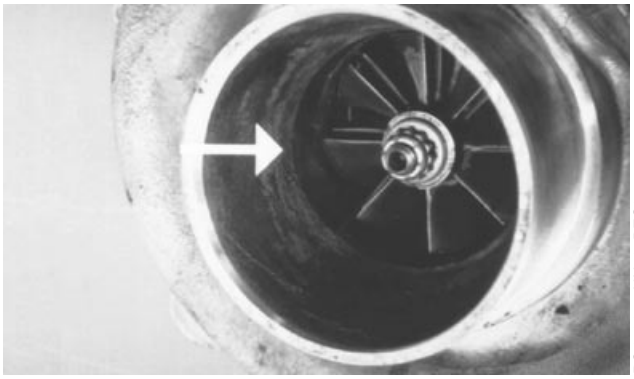

Checking Compressor Inlet

Continued on next page

RG,30,JW7574 –19–19SEP01–3/12

Compressor Housing Outlet

1. Check compressor housing outlet (A). The outlet should be clean and free of dirt or oil.
2. Mark it on your checklist if dirt or oil is found and continue the inspection.

A—Compressor Housing Outlet

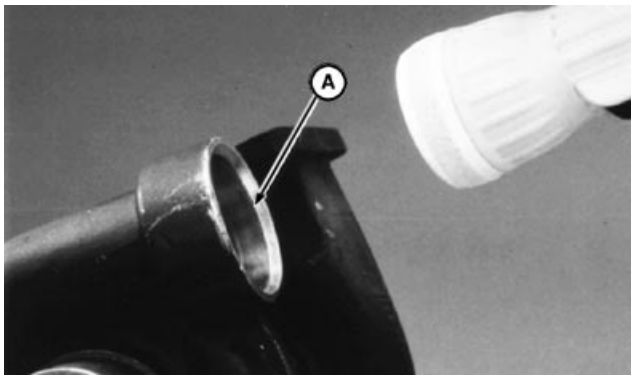

Checking Compressor Outlet

RG,30,JW7574 –19–19SEP01–4/12

Turbine Housing Inlet

Check the turbine housing inlet ports (arrow) for oil in housing, excessive carbon deposit or erosion of center walls.

NOTE: If the inlet is wet with oil, or has excessive carbon deposits, an engine problem is likely. Center wall erosion (cracking or missing pieces), indicates excessive exhaust temperature.

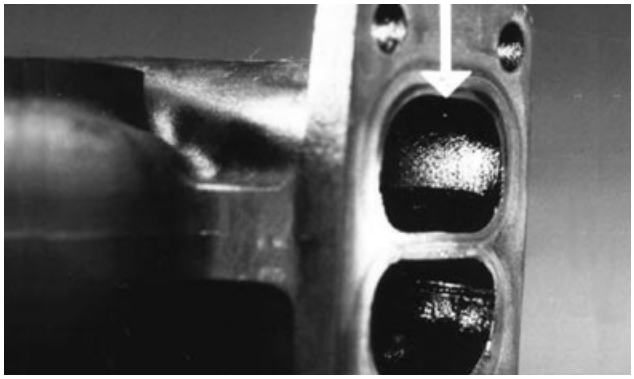

Checking Turbine Housing Inlet Ports

Continued on next page

RG,30,JW7574 –19–19SEP01–5/12

Turbine Housing Outlet and Turbine Wheel

1. Use a flashlight to look up inside the turbine housing outlet (A) and check blades (B) for foreign object damage.

A—Turbine Housing Outlet
B—Blades

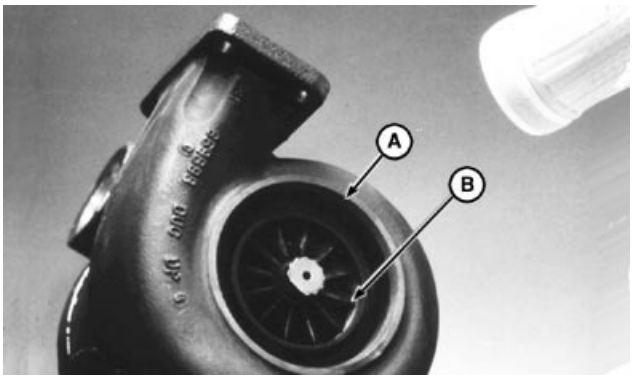

RG4527 –UN–05DEC97

Checking Turbine Wheel and Outlet

RG,30,JW7574 –19–19SEP01–6/12

2. Inspect the wheel blades and housing for evidence of wheel rub (arrow). Wheel rub can bend the tips of the blades with the housing showing wear or damage.

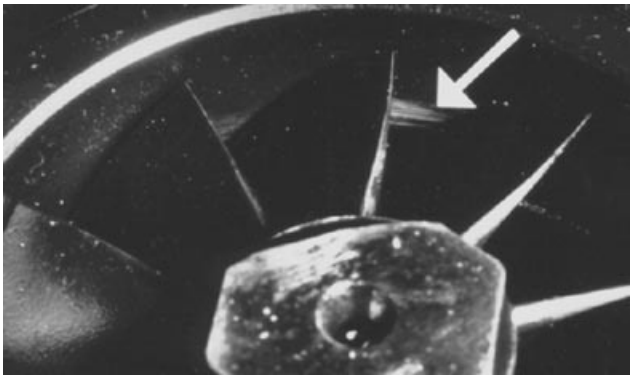

RG4528 –UN–05DEC97

Checking Turbine Wheel Blades

Continued on next page

RG,30,JW7574 –19–19SEP01–7/12

3. Rotate the shaft, using both hands, to check rotation and clearance. The shaft should turn freely; however, there may be a slight amount of drag.

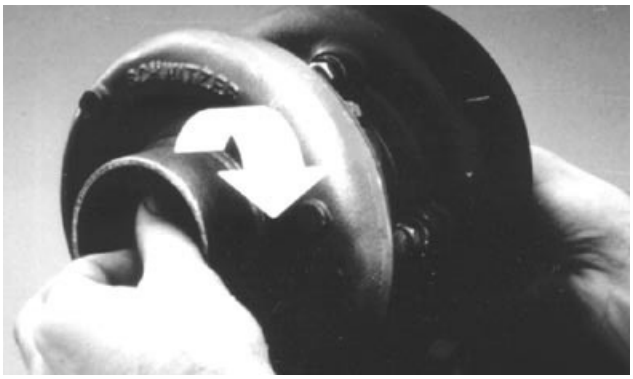

Checking Shaft Rotation and Clearance

RG,30,JW7574 –19–19SEP01–8/12

IMPORTANT: Use only moderate hand force (3—4 pounds) on each end of shaft.

4. Next, pull up on the compressor end of the shaft and press down on the turbine end while rotating shaft. Neither the compressor wheel nor the turbine wheel should contact the housing at any point.

NOTE: There will be some "play" because the bearings inside the center housing are free floating.

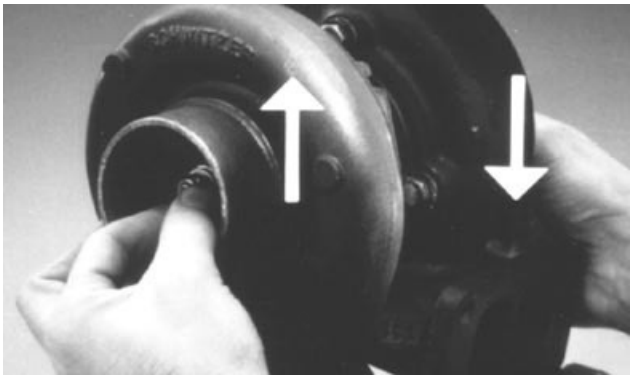

Checking for Contact of Compressor and Turbine Wheels

Continued on next page

RG,30,JW7574 –19–19SEP01–9/12

External Center Housing and Joints

Visually check the outside of the center housing, all connections to the compressor, and turbine housing for oil.

NOTE: If oil is present, make sure it is not coming from a leak at the oil supply or return line.

IMPORTANT: Before you finalize your conclusion that the turbocharger has not failed, it is strongly recommended that the following procedures of checking radial bearing clearance and axial bearing endplay with a dial indicator be performed. These procedures are not required if a failure mode has already been identified.

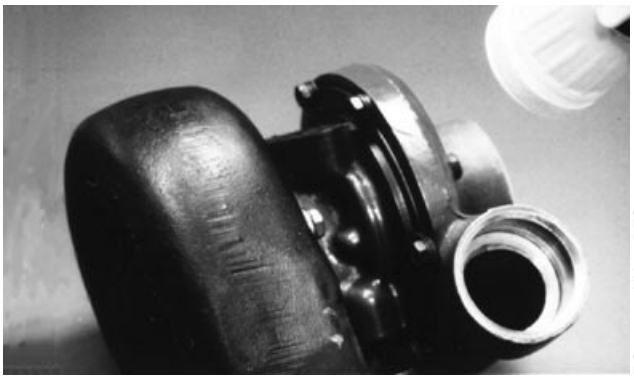

RG4529 –UN–05DEC97

Checking Center Housing

Continued on next page

RG,30,JW7574 –19–19SEP01–10/12

Perform Axial Bearing End Play Test

This test will give an indication of the condition of the axial bearing within the center housing and rotating assembly.

1. Mount magnetic base dial indicator so that indicator tip rests on end of shaft. Preload indicator tip and zero dial on indicator.

2. Move shaft axially back and forth by hand.

3. Observe and record total dial indicator movement.

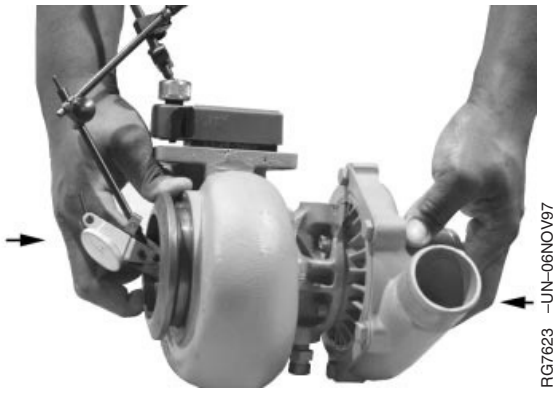

Axial Bearing and End Play Test

Specification

Turbocharger (AiResearch/Garret)—Axial Bearing End Play	0.025—0.102 mm (0.001—0.004 in.)
Turbocharger (CZ)—Axial Bearing End Play	0.11—0.16 mm (0.004—0.006 in.)
Turbocharger (Schwitzer)—Axial Bearing End Play	0.064—0.114 mm (0.0025—0.0045 in.)
Turbocharger (BorgWarner/Schwitzer)—Axial Bearing End Play	0.14 mm (0.0055 in.) Maximum

If bearing end play is not within specification, replace turbocharger.

RG,30,JW7574 –19–19SEP01–11/12

4. Next, check shaft endplay by moving the shaft back and forth (white arrows) while rotating. There will be some endplay but not to the extent that the wheels contact the housings.

NOTE: These diagnostic procedures will allow you to determine the condition of the turbocharger. If the turbocharger has failed, analysis of your inspection notes should direct you to the specific areas of the engine to correct the problems causing the turbocharger failure. See TURBOCHARGER FAILURE ANALYSIS outlined earlier in this group. It is not unusual to find that a turbocharger has not failed. If your turbocharger passes all the inspections, the problem lies somewhere else.

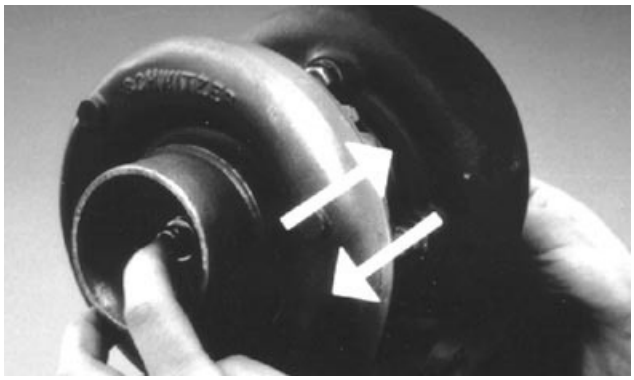

Checking Shaft End Play

RG,30,JW7574 –19–19SEP01–12/12

Perform Radial Bearing Clearance Test

This test will give an indication of the condition of the radial bearings within the center housing and rotating assembly.

NOTE: Prelube center housing bearings prior to performing radial clearance test. (See PRELUBE TURBOCHARGER, later in this group.)

AiResearch/Garret Turbocharger

1. Position dial indicator with extension adapter onto center housing so that tip rests on shaft extending through oil return cavity.

IMPORTANT: Use only moderate force (3—4 lb) on each end of the shaft when checking clearance.

2. Grasp rotating shaft at both ends and move the shaft toward the indicator then away from the indicator (arrows) by applying moderate force of 3—4 lb.

3. Observe and record total indicator movement.

Specification	
Turbocharger (AiResearch/Garret)—Radial Bearing Clearance	0.08—0.18 mm (0.003—0.007 in.)

4. If total indicator reading is not within specification, replace turbocharger.



RG7622 –UN–06NOV97

Radial Bearing Clearance Test

Continued on next page

RG,30,JW7573 –19–15DEC99–1/2

BorgWarner/Schwitzer and CZ Turbochargers

1. Remove compressor cover.
2. Install a dial indicator against end of shaft as shown.
3. Move shaft alternately toward and away from indicator and record total travel. Compare reading with the following specification.

Specification

Turbocharger (CZ)—Radial Bearing Clearance..... 0.37—0.46 mm (0.015—0.018 in.)
Turbocharger (BorgWarner/Schwitzer)—Radial Bearing Clearance..... 0.51 mm (0.0200 in.) Maximum

4. If total indicator reading is not within specification, replace turbocharger.
5. Install compressor cover.

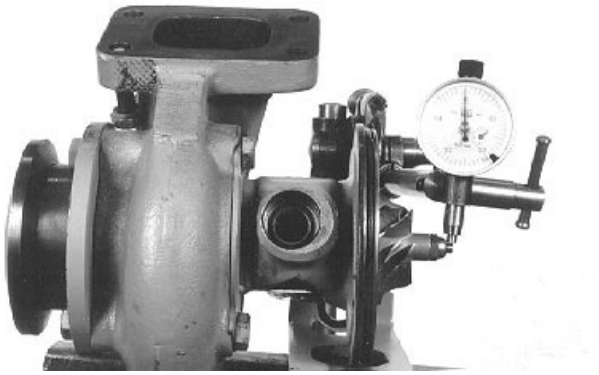

CD30658 –UN–04MAY98

Radial Bearing Clearance Test

RG,30,JW7573 –19–15DEC99–2/2

Adjust Turbocharger Wastegate Actuator (If Equipped)

1. Loosen jam nut (A).
2. Disconnect hose and pressurize actuator to specified pressure for the application being used. Hold pressure to particular application's pressure. (See application listing in DIAGNOSTIC SPECIFICATIONS, Group 06)
3. Push bypass lever (D) as far as possible toward the actuator and apply pressure to keep lever in that position.

IMPORTANT: Twisting or forcing the entire rod in or out will change the calibration, causing damage to engine from overboost.

4. Turn rod end (B) in either direction until rod eye can just be slipped over bypass lever pin. Loosen rod end an additional half turn, install onto pin and secure with retainer clip (C). Release pressure on actuator.
5. Pressurize the actuator to pressure specified for the application. Measure the end play with a dial indicator, moving the bypass assembly back and forth in a direction perpendicular to the actuator rod. If necessary, adjust actuator end play to be within specifications.

Specification	
Turbocharger—Actuator End Play	0.05—0.056 mm (0.002—0.022 in.)

6. Vary the pressure in a range around pressure specification a few times to verify smooth and free operation of the bypass assembly.
7. Attach hose to actuator and secure with hose clamp.

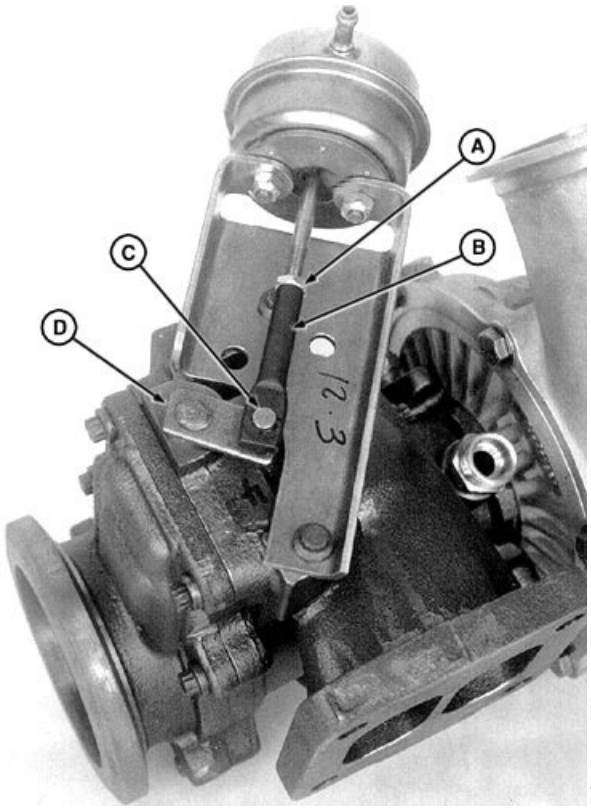

Turbo Wastegate

A—Jam Nut
B—Rod End
C—Retainer Clip
D—Bypass Lever

RG19661,0000012 –19–17JUN05–1/1

Remove and Install Variable Geometry Turbocharger Actuator (If Equipped)

IMPORTANT: Disconnect the battery cables before performing any work. Insure power supply is in the "off" position when performing work on the turbocharger actuator or damage to the ECU/Actuator communication can result. When an actuator is connected to power, it will perform a baseline learn to record the fully open and closed positions. If this baseline learn is incorrect, the actuator will not perform correctly.

1. Disconnect actuator wiring harness (A).

2. Disconnect actuator coolant supply line (B) and coolant return line (C).

NOTE: Whenever disconnecting actuator linkage, ensure that the linkage does not bind or is forced out of position.

3. Disconnect actuator linkage arm (D) by loosening and removing allen screw.

4. Loosen and remove 4 hex nuts (E) securing actuator to bracket. Remove actuator assembly from turbocharger.

To install the actuator, reverse the steps shown above.

1. Position actuator to bracket and finger tighten 4 hex nuts.

2. Tighten nuts to specification

Specification	
Actuator to Bracket Hardware—Torque	13.5 N•m (10 lb-ft)

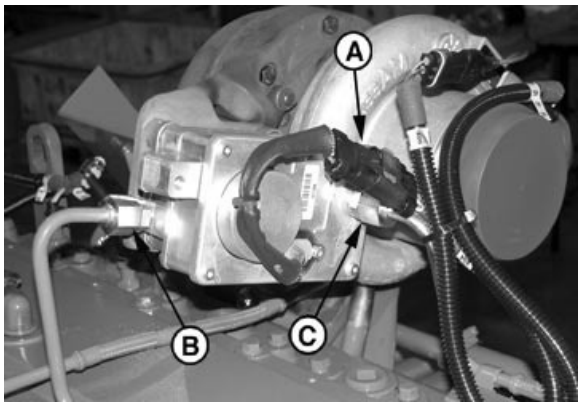

Actuator Coolant Lines & Wiring Harness

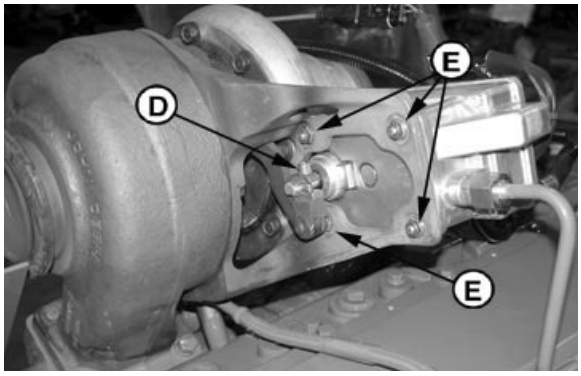

Actuator Linkage & Bracket Hardware

A—Actuator Wiring Harness
B—Actuator Coolant Supply
C—Actuator Coolant Return
D—Actuator Linkage Allen Screw
E—Actuator to Bracket Hardware

Continued on next page

IMPORTANT: When installing actuator linkage, be certain there is free movement of the linkage, with no binding. The center joint of the linkage should be slightly loose when wiggled, with clearance between linkage arms on the pivot joint.

3. Position actuator linkage arm over actuator shaft and install stainless steel allen head screw to secure linkage to actuator shaft.

4. Carefully tighten allen screw to specification.

Specification

Linkage Arm to Actuator Shaft—
Torque Turn..... 7 N•m (5 lb-ft)

5. Connect actuator coolant supply and return lines to actuator. Secure nuts on both fittings, and using a second wrench, tighten fittings to specification.

Specification

Coolant Lines to Actuator—
Torque ..... 24 N•m (18 lb-ft)

RG19661,0000044 –19–28MAR05–2/2

Remove and Install Actuator Linkage

Remove Turbocharger Actuator Linkage

NOTE: Use caution when loosening or tightening linkage hardware. Stainless steel screws are brittle and break easily.

IMPORTANT: BE CERTAIN actuator wiring harness is disconnected before completing any repairs on linkage.

1. Position linkage arm so the inboard (turbocharger shaft) linkage set screw (A) is visible through bracket. Loosen screw.
2. Loosen outboard (actuator shaft) set screw (B).
3. Remove both screws and carefully remove actuator linkage (C) from actuator and turbocharger shafts.

A—Actuator Linkage to Shaft Screw - Inboard
B—Actuator Linkage to Shaft - Outboard
C—Actuator Linkage Arm

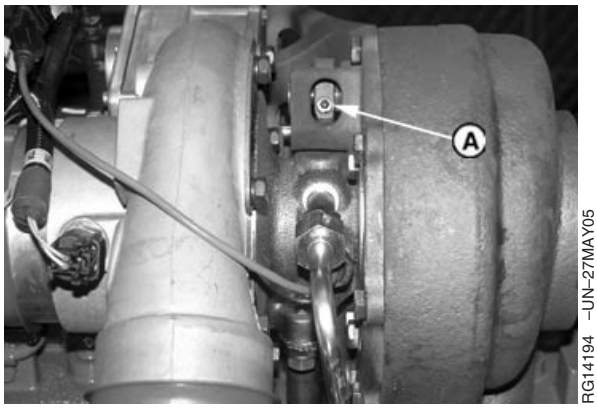

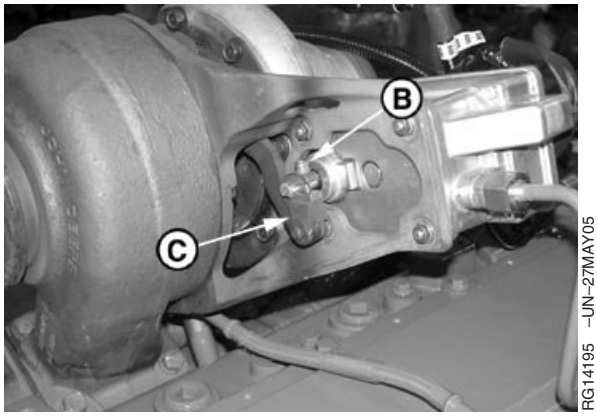

Actuator Linkage Screw - Outboard Position

Continued on next page

Install Turbocharger Actuator Linkage

IMPORTANT: BE CERTAIN actuator wiring harness is disconnected before completing any repairs on linkage.

1. Insert linkage onto turbocharger pivot shaft flats (A).

NOTE: It may be helpful to use a screwdriver to exert slight pressure on linkage to align linkage with bolt hole in shaft. Take care that the end link does not rotate on the shaft on an axis perpendicular to the axis of the shaft. This can cause binding of the linkage assembly.

2. Install M5 bolt through linkage and turbocharger shaft finger tight (B).

3. Using a screwdriver as a wedge between the link and cast bushing pocket, and to stabilize the link as the bolt is being tightened, tighten the M5 bolt to specification.

Specification	
Linkage to Cast Bushing Pocket Bolt—Torque	7 N•m (5 lb-ft)

4. Install linkage (C) onto actuator output shaft flats (D) and install M5 bolt through linkage and shaft finger tight (E).

A—VGT Link - Turbocharger Shaft
B—M5 Bolt - Turbocharger Shaft
C—VGT Link - Actuator Shaft
D—Actuator Pivot Shaft
E—M5 Bolt - Actuator Shaft
F—Center Pivot Joint

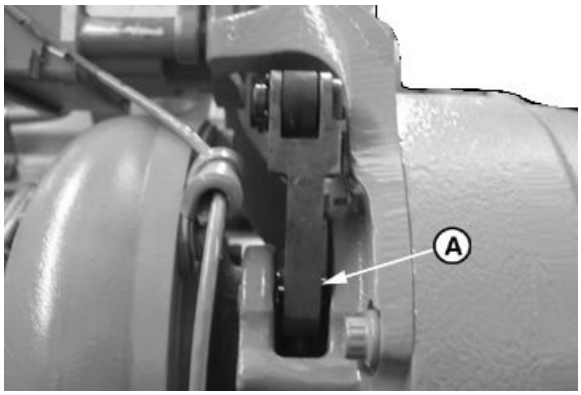

RG14210 –UN–28MAY05

Install Link to Turbocharger Shaft

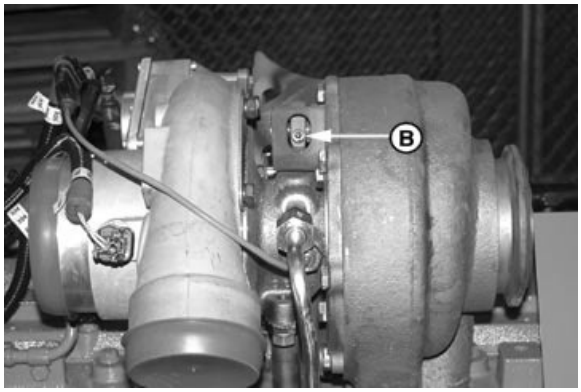

RG14209 –UN–28MAY05

M5 Bolt - Turbocharger Shaft

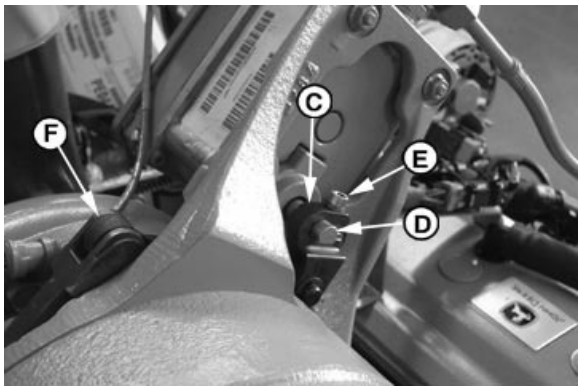

RG14211 –UN–28MAY05

Install Link - Actuator Shaft

Continued on next page

5. Check linkage orientation for free travel (as shown) and to be sure there is no binding.

IMPORTANT: Be constantly aware of any binding in the linkage. After bolts are tightened, linkage should travel freely at all times. The center pivot joint should have some play when linkage shaft is wiggled. If binding of the linkage is noted, use a screwdriver to gently pry the end link into necessary position such that linkage moves freely throughout its full range and the binding condition is corrected.

6. Using a screwdriver as a wedge between the link and actuator housing, and to stabilize the link as the bolt is being tightened, tighten the M5 bolt to specification.

Specification	
Linkage to Actuator Shaft Bolt— Torque	7 N•m (5 lb-ft)

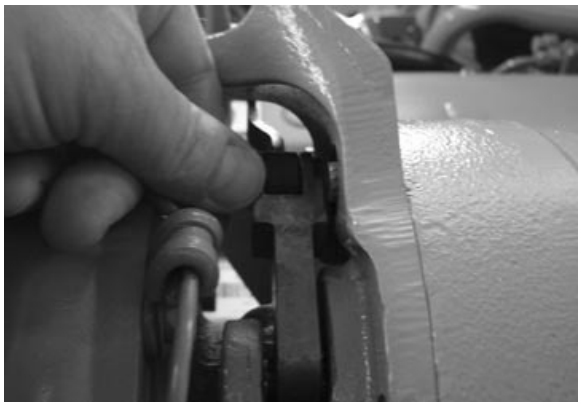

Check for Linkage Free Travel

RG19661,0000001 –19–13JUN05–3/3

Repair Turbocharger

Turbochargers used on the engines covered in this manual are available through service parts as a complete remanufactured assembly only. Individual components for repair are not available.

Turbochargers for service may be designed for a specific application. When installing turbochager on engine, it can be necessary to re-orient the center and compressor housings.

On engines equipped with the variable geometry turbocharger, an engine re-learn procedure is required to enable the engine to reset it's operating paramaters. During this process, the engine may momentary increase in speed.

RG,30,JW7571 –19–20NOV97–1/1

Prelube Turbocharger

IMPORTANT: DO NOT spin the rotor assembly with compressed air. Damage to bearings can occur when using compressed air.

02
080
22

Fill oil inlet or drain port with clean engine oil and spin rotating assembly (by hand) to properly lubricate bearings.

If turbocharger is to be stored for an extended period of time, lubricate internally and install protective covers on all openings.

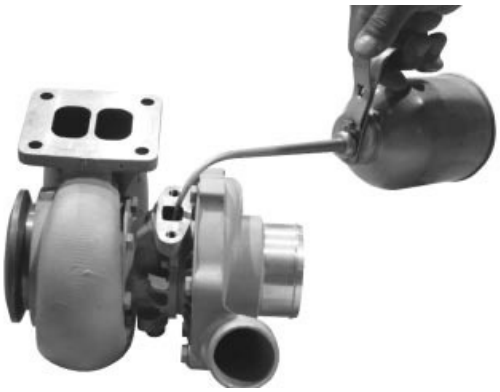

RG7624 –UN–23NOV97

Turbocharger Pre-Use Lubrication

RG,30,JW7570 –19–20NOV97–1/1

Install Turbocharger

IMPORTANT: If turbocharger failed because of foreign material entering the air intake system, be sure to examine the system and clean as required to prevent a repeat failure.

If not done previously, prime (prelube) the turbocharger rotating assembly prior to mounting turbocharger on engine. Prelube center housing with clean engine oil through the oil drain hole. Turn rotating assembly by hand to lubricate bearings.

1. Clean turbocharger-to-exhaust manifold mounting surfaces of any debris or old gasket material.

IMPORTANT: Turbochargers can be either single or dual entry. Make sure the appropriate single or dual gasket is used when installing turbocharger.

NOTE: Some turbochargers are installed with a liquid gasket in production. Replace with a new stainless steel gasket when servicing.

2. Position turbocharger and new stainless steel gasket onto exhaust manifold. Tighten stud nuts to specifications.

Specification	
Turbocharger-to-Exhaust Manifold Nuts—Torque	70 N•m (52 lb-ft)

Continued on next page

NOTE: Turbochargers for service are designed for a specific application. In case where engine connections are not in line with turbocharger connections, follow the procedure described in step 3. Otherwise go directly to step 4.

3. Procedure to re-orient turbocharger housings:

   a. Loosen cap screws (F) of turbine housing (D).

   b. Rotate center housing (E) until oil inlet is in line with oil supply tube (C) and oil outlet is in line with oil return pipe (G).

   c. Tighten turbine housing cap screws (F) to specification.

Specification

Center Housing-to-Turbine
Housing Cap Screw—Torque..... 20 N•m (177 lb-in.)

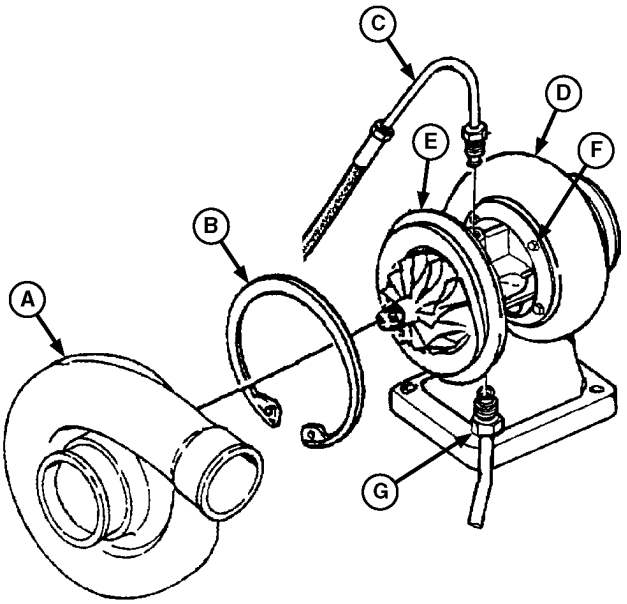

RG13385 –UN–11DEC03

Turbocharger

A—Compressor Cover
B—Snap Ring
C—Oil Inlet Line
D—Turbine Housing
E—Center Housing
F—Cap Screw
G—Oil Return Pipe

   d. Compress snap ring (B) securing compressor cover (A), then rotate until in line with air inlet pipe. Release snap ring.

   e. If not done previously, prime (prelube) the turbocharger.

NOTE: Replace cap screws for oil return pipe (C) with serrated flange-head cap screws (19M9093) for engines in excavators, crawlers, backhoes and OEM applications. Tighten these cap screws to 9 N•m (81 lb-in.).

Continued on next page

RG19661,0000004 –19–15JUN05–2/5

4. Install oil return pipe (C) to turbocharger. Tighten oil return pipe cap screws to specifications.

Specification

Turbocharger Oil Return Pipe Cap Screws—Torque ..... 24 N•m (212 lb-in.)

5. Connect turbocharger oil inlet line (B) and tighten to specifications.

Specification

Turbocharger Oil Inlet Line (At Turbocharger)—Torque ..... 24 N•m (212 lb-in.)
Turbocharger Oil Inlet Line (At Oil Filter Header)—Torque..... 24 N•m (212 lb-in.)

A—Hose Clamp
B—Oil Inlet Line
C—Oil Return Pipe
D—Turbocharger
E—Actuator
F—Actuator Coolant Inlet
G—Actuator Coolant Outlet

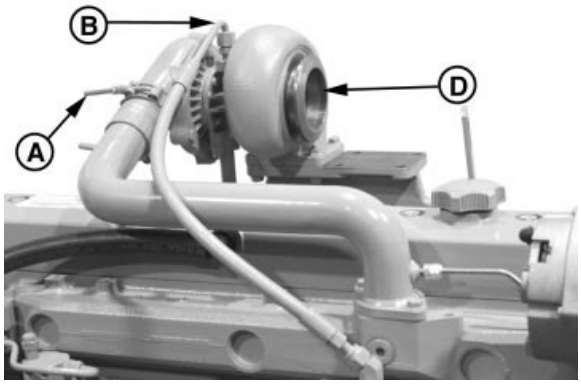

RG7618B –UN–06NOV97

Install Turbocharger

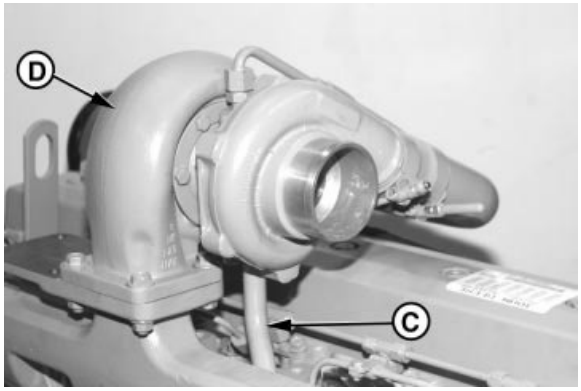

RG7619B –UN–06NOV97

Connect Turbocharger Lines

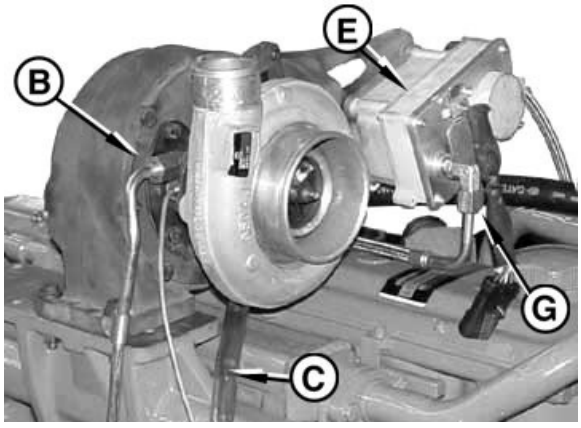

RG14104 –UN–24MAR05

Install VG Turbocharger

Continued on next page

RG19661,0000004 –19–15JUN05–3/5

6. Connect turbocharger actuator inlet and outlet coolant line fittings. Connect wiring sensor leads.

7. Connect air inlet hose-to-turbocharger compressor housing. Tighten hose clamp (A) on air inlet line to specifications.

Specification	
Turbocharger Air Inlet Hose Clamp—Torque	6 N•m (4.5 lb-ft) (53 lb-in.)

IMPORTANT: Since the greatest suction force occurs between air cleaner and turbocharger, ensure that hose connections are tight to prevent entry of dirt into system.

8. Install exhaust adapter and exhaust elbow. Tighten cap screws and clamp to specifications.

Specification	
Exhaust Adapter-to-Turbocharger Clamp—Torque	7.5 N•m (5.5 lb-ft) (66 lb-in.)
Turbocharger Exhaust Elbow—Torque	47 N•m (35 lb-ft)

IMPORTANT: Failure to thoroughly clean all oil from the air-to-air aftercooler and lines will result in an engine over speed situation upon start-up, resulting in engine damage.

9. On engines equipped with an air-to-air aftercooler: after a turbocharger failure, it is absolutely necessary to clean air-to-air aftercooler and lines of all contamination, especially oil. Follow this procedure to clean air-to-air aftercooler and lines:

   - Remove air-to-air aftercooler from machine. See Remove and Install Air-to-Air Aftercooler in this group.
   - Clean all oil residue from air-to-air aftercooler and lines using PMCC2638 John Deere Cooling System Cleaner or equivalent.
   - Dry the inside of air-to-air aftercooler and lines using compressed air.

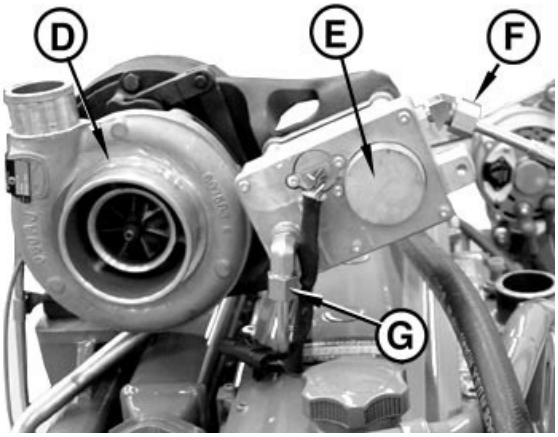

Connect VG Turbocharger Actuator Coolant Line

A—Hose Clamp
B—Oil Inlet Line
C—Oil Return Pipe
D—Turbocharger
E—Actuator
F—Actuator Coolant Inlet
G—Actuator Coolant Outlet

Continued on next page

IMPORTANT: Before starting engine after servicing turbocharger, run special test "Turbo Learn Value Reset Test" in Service Advisor™ or DST.

RG19661,0000004 –19–15JUN05–5/5

Turbocharger Break-In

IMPORTANT: A new or repaired turbocharger DOES NOT have an adequate oil supply for immediate start-up of engine. Perform the steps below to prevent damage to turbocharger bearings.

1. Either push the throttle lever to the "STOP" position, hold the engine shut-off knob out, or disconnect electrical wire from injection pump.

IMPORTANT: DO NOT crank engine longer than 30 seconds at a time to avoid damage to starter motor.

2. Crank engine over with starter motor until oil pressure gauge needle registers within the "GREEN" zone of pressure gauge.

3. Start and run engine at low idle while checking oil inlet and air piping connections for leaks.

RG,30,JW7568 –19–20NOV97–1/1

Recommendations for Turbocharger Use

IMPORTANT: Should the engine stall when operating under load, IMMEDIATELY restart the engine to prevent overheating of turbocharger parts.

In most cases, turbocharger damage is caused by improper start-up and shutdown procedures. Always idle the engine for at least 30 seconds (no load) after start-up and before shutdown.

DPSG,OUO1004,5 –19–31MAR98–1/1

Remove, Inspect, and Install Exhaust Manifold

1. Remove turbocharger (if equipped), exhaust elbow, or exhaust pipe if desired. Turbocharger can be removed with exhaust manifold (A). (See REMOVE TURBOCHARGER, earlier in this group.) Remove cooler cap screws (if equipped).

   Remove exhaust temperature tube between the exhaust manifold and thermostat housing (if equipped).

2. Remove exhaust manifold. Use fabricated guide studs (C) to aid in removal.

NOTE: Some engines are assembled with sealant in production. Replace with gaskets when servicing.

Some exhaust manifolds are equipped with a one-piece gasket.

3. Remove gasket(s) (B) if equipped.

4. Remove exhaust port sleeves on four-valve head.

5. Inspect sleeves for cracks or wear. Replace as needed.

6. Clean mating surfaces of cylinder head and exhaust manifold with cleaning solvent, acetone, or any other suitable cleaner that will remove sealant, if previously applied. (Brake Kleen, Ignition Cleaner and Drier are examples of commercially available solvents that will remove sealant from flange.) Thoroughly clean passages in exhaust manifold.

7. Inspect each exhaust manifold for cracks or damage. Inspect machined mounting surfaces for burrs or other defects which might prevent gasket(s) from sealing properly. Replace parts as needed.

8. Install gasket(s) (B) on exhaust manifold.

A—Exhaust Manifold
B—Gasket
C—Guide Studs
D—Exhaust Port Sleeve

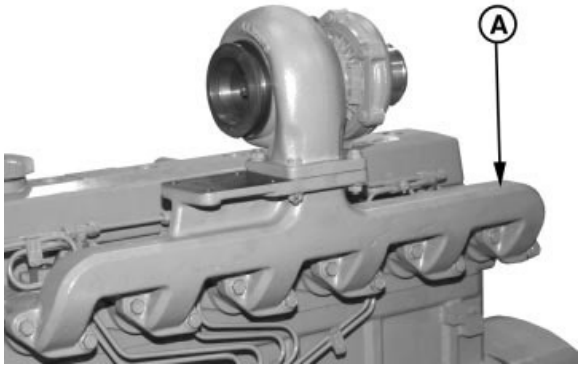

RG7794B –UN–11NOV97

Exhaust Manifold w/Turbocharger Installed

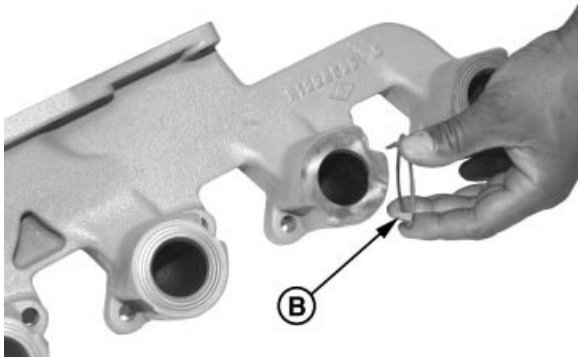

RG7625B –UN–06NOV97

Exhaust Manifold Gaskets

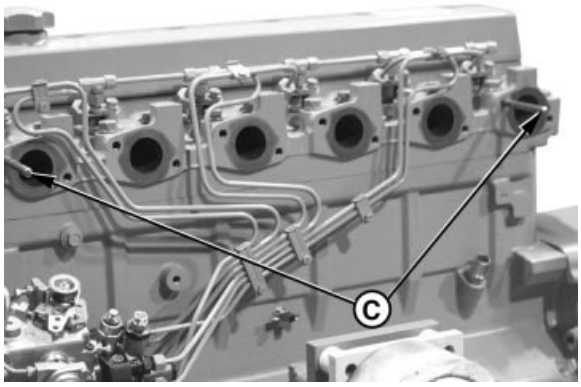

RG7985 –UN–14NOV97

Fabricated Exhaust Manifold Guide Studs

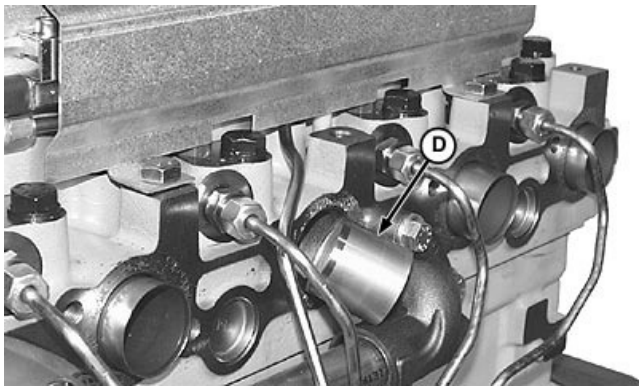

RG13386 –UN–11DEC03

Exhaust Port Sleeve—Four Valve Head

Continued on next page

NOTE: Stainless steel gaskets can be reused if not damaged. Graphite gaskets must be replaced.

9. Install exhaust port sleeves for four-valve head.

10. Install exhaust manifold. Use fabricated guide studs (C) to aid with installation.

11. Apply PT569 NEVER-SEEZ® Compound to cap screws.

12. Tighten exhaust manifold-to-cylinder head cap screws to specifications. **On 6-cylinder engines,** tighten cap screws on No. 3 and No. 4 cylinders first. **On 4-cylinder engines,** tighten No. 2 and No. 3 cylinders first.

Specification	
Exhaust Manifold-to-Cylinder Head Cap Screws—Torque	70 N•m (52 lb-ft)

13. Install exhaust temperature tube between exhaust manifold and thermostat housing (if equipped).

NEVER-SEEZ is a registered trademark of Emhart Chemical Group

RG,30,JW7567 –19–18JUN02–2/2

02
080
29

Remove and Install Air-to-Air Aftercooler

Refer to machine technical manual for removal, inspection, and installation procedures.

RG,30,JW7566 –19–20NOV97–1/1

Remove and Install EGR Exhaust Tube (Tier 3/Stage IIIA)

1. Remove EGR exhaust tube and P-clamp attaching cap screws (C) and gaskets.
2. Inspect exhaust tube for damage or leaks and clean mating surfaces.
3. Install exhaust tube by placing in position. Use new gaskets and ensure all mating surfaces are flush. Hand tighten all cap screws to assure alignment. Tighten cap screws to specifications.

Specification

EGR Exhaust Tube Cap Screws—Torque	35 N•m (25 lb-ft)
Exhaust Tube P-Clamp Cap Screw—Torque	25 N•m (18 lb-ft)

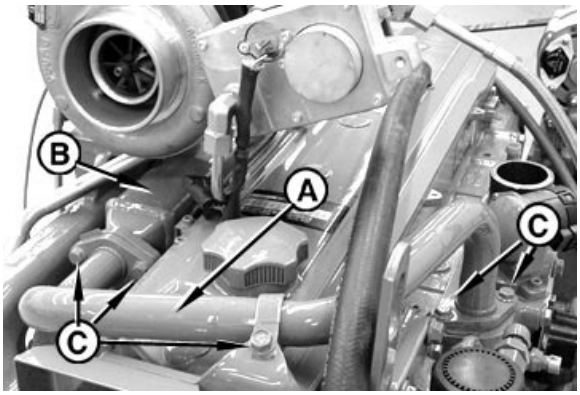

EGR Exhaust Tube

A—EGR Exhaust Tube
B—EGR Cooler
C—EGR Exhaust Tube Cap Screws

RG19661,0000041 –19–22MAR05–1/1

Remove and Install EGR Coolant Inlet Tube (Tier 3/Stage IIIA)

1. Remove coolant tube-to-EGR cooler cap screw .
2. Remove P-clamps at the rear and side of the engine.
3. Loosen EGR coolant inlet tube hose clamp located at the oil cooler and remove coolant tube.
4. Inspect coolant tube and mating surfaces for defects and nicks which may cause leaks.
5. Install tube in EGR Cooler and tighten to specifications.

Specification

EGR Coolant Inlet Tube Cap Screw—Torque ..... 35 N•m (25 lb-ft)

6. Insert coolant tube in hose and secure hose clamp.
7. Tighten P-clamp cap screws to specifications.

Specification

Coolant Tube P-Clamp Cap Screws—Torque ..... 25 N•m (18 lb-ft)

A—EGR Inlet Coolant Tube
B—Cap Screw
C—P-Clamps
D—Hose Clamp

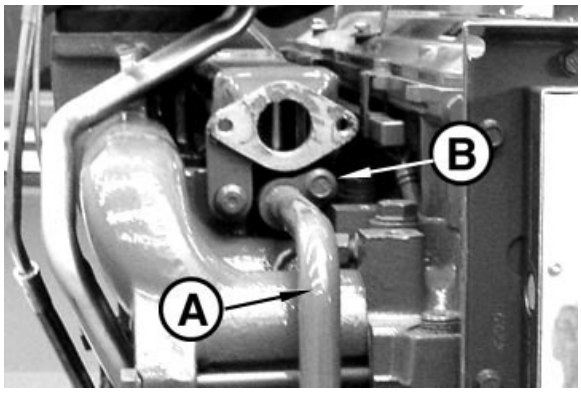

RG14087 –UN–23MAR05

Coolant Tube Cap Screw

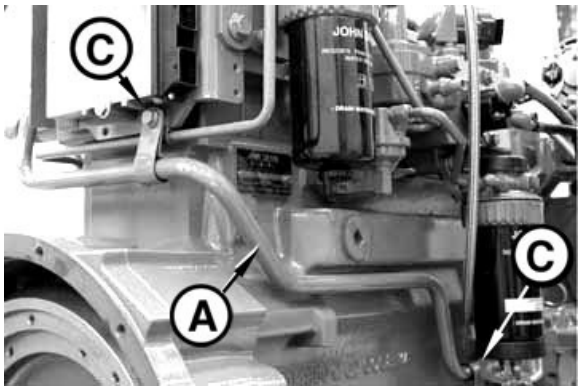

RG14090 –UN–23MAR05

Coolant Tube Clamps

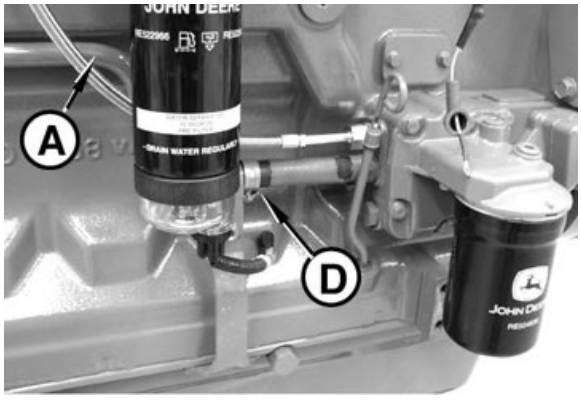

RG14098 –UN–23MAR05

Coolant Tube Hose Connection

RG19661,0000042 –19–22MAR05–1/1

Remove and Install EGR Cooler (Tier 3/Stage IIIA)

1. Loosen EGR cooler rear support bushing cap screw (B).
2. Remove front EGR cooler cap screws (C).
3. Remove rear support bushing. Carefully remove the EGR cooler (A) and coolant outlet tube (D) as an assembly by sliding to the rear of the engine. If required, coolant outlet tube can be removed from the EGR cooler.
4. Inspect EGR cooler for damage and leaks.
5. Install coolant outlet tube to EGR cooler, if removed. Tighten cap screw to specifications.

Specification

EGR Cooler Outlet Tube Cap Screw—Torque ..... 35 N•m (25 lb-ft)

6. Install EGR cooler and outlet tube by carefully sliding the assembly forward and inserting the coolant tube into the thermostat housing (E).
7. Align the back of the EGR cooler and install the rear support bushing with cap screw and tighten to specifications.

Specification

Rear Support Bushing Cap Screw—Torque ..... 35 N•m (25 lb-ft)

8. Install and tighten EGR cooler front attaching cap screws to specifications.

Specification

EGR Cooler Cap Screws—Torque ..... 35 N•m (25 lb-ft)

A—EGR Cooler
B—Rear Support Bushing
C—Front Cap Screws
D—EGR Coolant Outlet Tube
E—Thermostat Housing

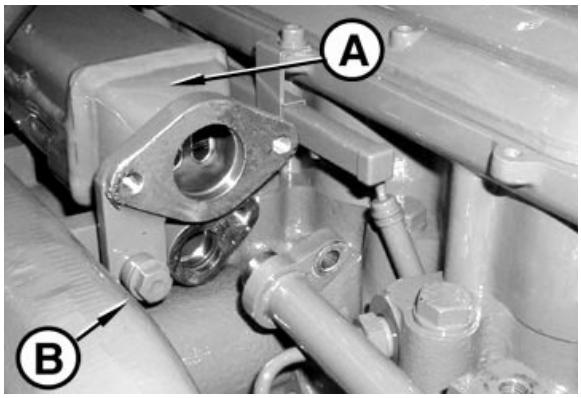

EGR Cooler Rear Support Bushing Cap Screw

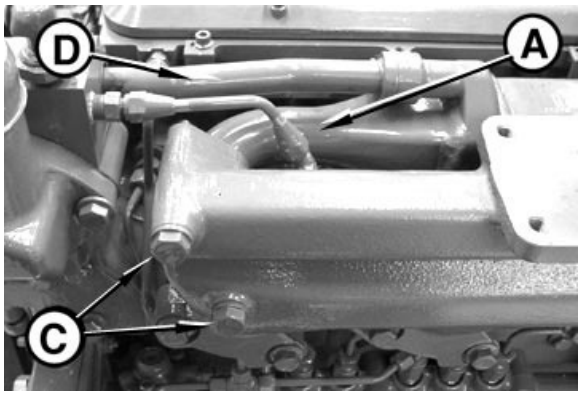

EGR Cooler Front Cap Screws

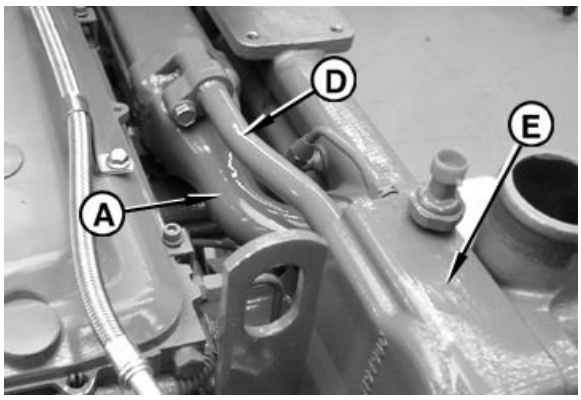

EGR Coolant Outlet Tube

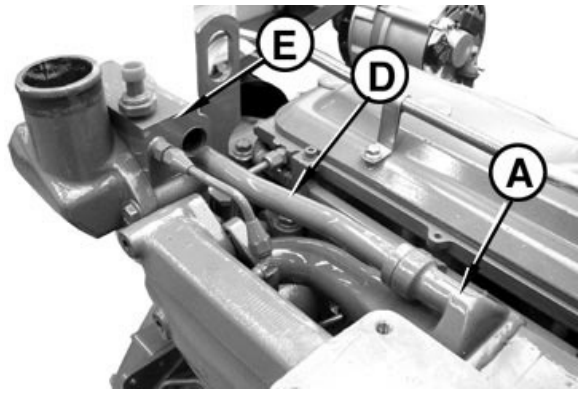

EGR Coolant Outlet Tube

RG19661,000003F –19–21MAR05–1/1

Remove, Inspect, and Install EGR Valve (Tier 3/Stage IIIA)

1. Remove two attaching screws (A), disconnect wiring lead and carefully remove the EGR valve by rotating slightly and pulling straight up.
2. Remove gasket and clean mating surfaces. Vacuum debris and loose carbon deposits from intake housing.
3. Replace EGR O-rings (B) each time valve is removed.
4. Inspect valve lands (C) for wear and damage. Remove carbon deposits and debris.
5. Carefully install EGR valve and new gasket with the motor pointing away from the engine. Tighten attaching screws to initial specifications.

Specification	
EGR Valve - Initial—Torque	5 N•m (4 lb-ft)

6. Tighten EGR attaching screws to final specifications. Connect wiring lead.

Specification	
EGR Valve - Final—Torque	15 N•m (11 lb-ft)

IMPORTANT: Before starting engine after servicing the EGR valve, run special test "Exhaust Gas Recirculation Valve Learn Value Reset" in Service Advisor™ or DST.

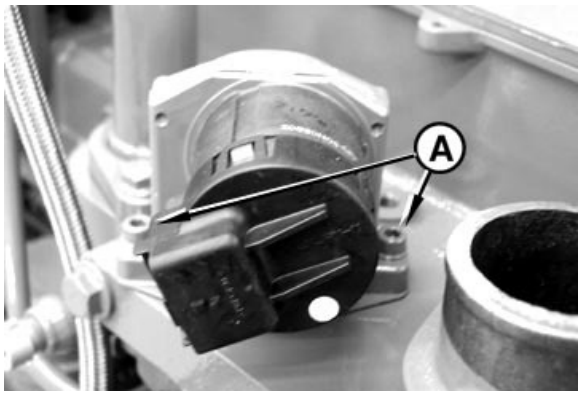

EGR Valve



Inspect EGR Valve

A—Attaching Screws
B—O-Rings
C—EGR Valve Lands

RG19661,0000040 –19–21MAR05–1/1

Remove and Install Air Intake Pipe

NOTE: Configuration of air intake pipe varies by application. Engines may also be equipped with an air heater or spacer between intake pipe and manifold. (See REMOVE AND INSTALL AIR HEATER next in this group.)

02
080
34

1. If required, disconnect start aid lines or wiring.
2. Remove cap screws (B).
3. Loosen hose clamp (A) and remove air intake pipe.
4. Inspect and repair as required.
5. Install new gasket and air intake pipe. Tighten cap screws to specifications.

Specification	
Air Intake Pipe-to-Cylinder Head—Torque	70 N•m (52 lb-ft)

6. Tighten hose clamp (A) to specifications.

Specification	
Air Intake Pipe Hose Clamp—Torque	6 N•m (4.5 lb-ft) (53 lb-in.)

7. If required, connect start aid lines or wiring.

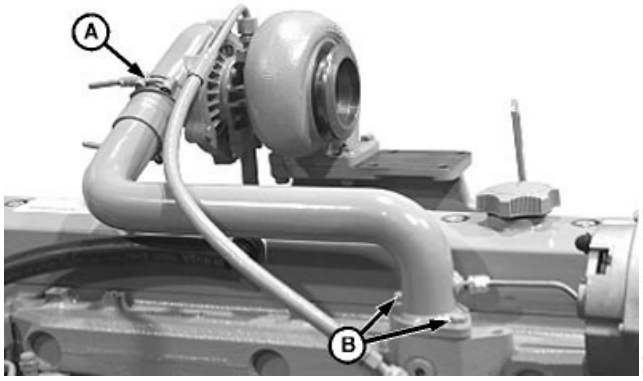

Air Intake Pipe

A—Hose Clamp
B—Cap Screws

DPSG,OUO1004,6 –19–17OCT01–1/1

Remove, Inspect, and Install Intake Manifold (Four-Valve Head)

NOTE: Position of fuel filters vary by engine type and engine application.

1. Remove fuel line (A).
2. Remove two cap screws (B) and remove prefilter (C).
3. Remove twelve cap screws (D) and remove intake manifold (E).
4. Inspect for cracks or damage. Inspect machined mounting surfaces for burrs or other defects which might prevent gasket from sealing properly.
5. Install new gasket and install intake manifold. Tighten cap screws to specification.

Specification

Intake Manifold Cap Screws—
Torque ..... 73 N•m (55 lb-ft)

6. Install prefilter.

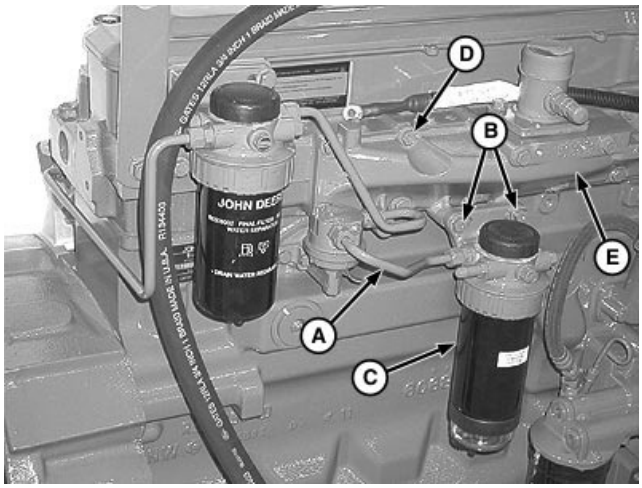

Intake Manifold, Four-Valve Head

A—Fuel Line
B—Cap Screw (2 used)
C—Prefilter
D—Cap Screw (12 used)
E—Intake Manifold

OUO1017,0000AF1 –19–20NOV03–1/1

Remove, Inspect, and Install Air Inlet and Mixing Sleeve (Tier 3/Stage IIIA)

02
080
36

NOTE: Configuration of air inlet varies by application.

1. Remove cap screws (A).
2. Remove air inlet housing and gasket. Clean all sealing surfaces.
3. Remove EGR mixing sleeve (C).
4. Inspect inlet housing and sleeve for cracks and damage. Replace if required.
5. Install EGR mixing sleeve and new gasket. Install air inlet housing with temperature sensor (B) facing forward. Tighten cap screws to specifications.

Specification	
Air Inlet-to-Intake Manifold—Torque	50 N•m (37 lb-ft)

6. If temperature sensor was removed, reinstall and tighten to specifications.

Specification	
Temperature Sensor—Torque	15 N•m (11 lb-ft)

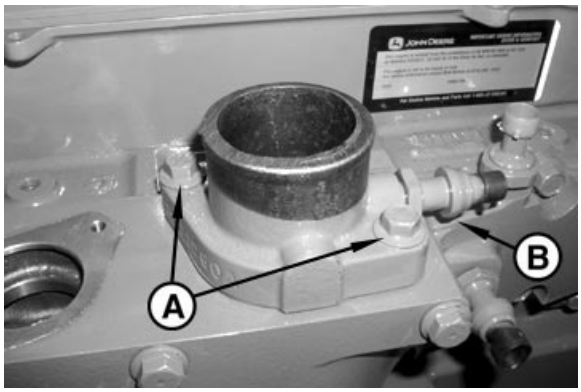

RG14083 –UN–21MAR05

Air Inlet

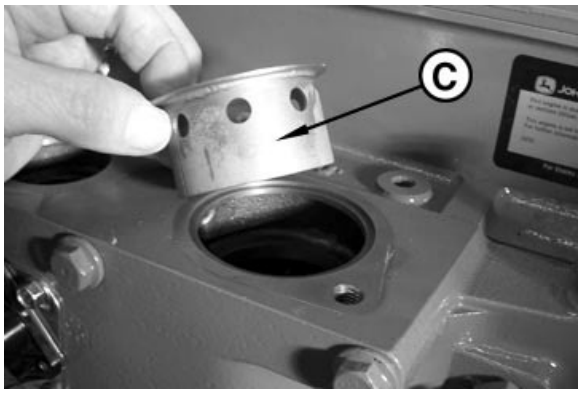

RG14084 –UN–21MAR05

A—Cap Screws
B—Air Inlet Temperature Sensor
C—EGR Mixing Sleeve

RG19661,000003E –19–21MAR05–1/1

Remove, Inspect, and Install Intake Manifold (Tier 3/Stage IIIA)

NOTE: Position of fuel filters vary by engine type and engine application.

1. Remove fuel lines (A).
2. Remove fuel transfer pump (B).
3. Remove exhaust tube flange cap screws (D).
4. Remove wiring harness starter relay (E).
5. Remove fuel prefilter (C) and intake manifold (G) cap screws.
6. Inspect intake manifold for cracks or damage. Inspect machined mounting surfaces for burrs or other defects which might prevent gasket from sealing properly.
7. Install new gasket and install intake manifold and prefilter. Tighten cap screws to specification.

Specification

Intake Manifold Cap Screws—
Torque ..... 53 N•m (40 lb-ft)

8. Install fuel transfer pump and fuel lines.

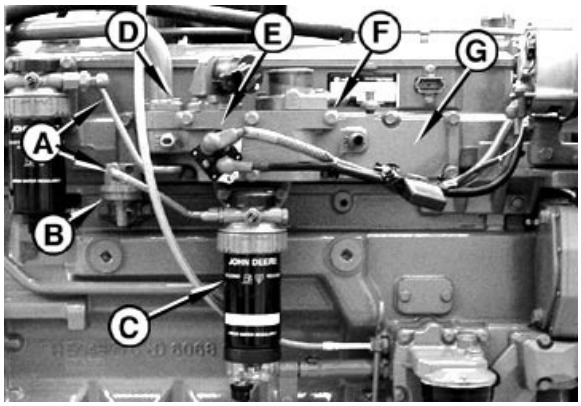

Intake Manifold for EGR

A—Fuel Lines
B—Fuel Transfer Pump
C—Fuel Prefilter
D—Exhaust Tube Cap Screws (2)
E—Wiring Harness
F—Cap Screws (12)
G—Intake Manifold

RG19661,000003D –19–21MAR05–1/1

Remove and Install Air Heater (If Equipped)

NOTE: Figure shows two types of air heaters. One or the other is used per application.

On later model grid-type air heaters, gasket (B) is replaced by an O-ring, eliminating the need for ground wire shown.

1. Disconnect wiring, if required.
2. If machine is equipped with grid-type air heater (A), remove air intake pipe. (See REMOVE AND INSTALL AIR INTAKE PIPE in this group.)
3. Remove air heater (A) or (C).
4. Replace parts as required.
5. If equipped with grid-type air heater, install air heater (A) with new gasket (B) or O-ring.

   Coat threads of air heater (C) with LOCTITE® 592 Pipe Sealant with TEFLON® and install.
6. Install air intake pipe if required.
7. Connect wiring, if required.

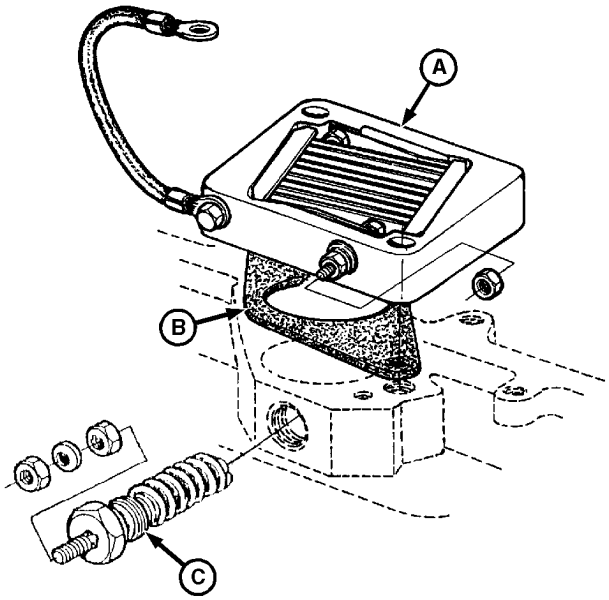

RG9081 –UN–16MAR98

Air Heater (Two Versions Shown)

A—Grid-Type Air Heater
B—Gasket
C—Glow Plug Air Heater

LOCTITE is a registered trademark of Loctite Corp.
TEFLON is a registered trademark of Du Pont Co.

DPSG,OUO1004,7 –19–18JUN02–1/1

Remove and Install Starting Aid (If Equipped)

1. Disconnect starting aid tube (1).

NOTE: When removing nozzle, note the location of red dot (2) when removing.

2. Remove nozzle holder from air inlet.

3. Clean or replace nozzle holder as required.

4. If removed, install adapter into air inlet tube and torque to specifications.

Specification

Adapter-to-Air Inlet Tube—Torque ..... 50 N•m (37 lb-ft)

NOTE: Red dot (2) on nozzle holder must be installed at the 12 o'clock position, facing the incoming air flow. Nozzle orifice (3) needs to be in the path of the air flow to disperse fluid for quick start of engine.

5. Install nozzle and connect starting aid tube.

1—Starting Aid Tube
2—Red Dot for Nozzle Installation
3—Orifice

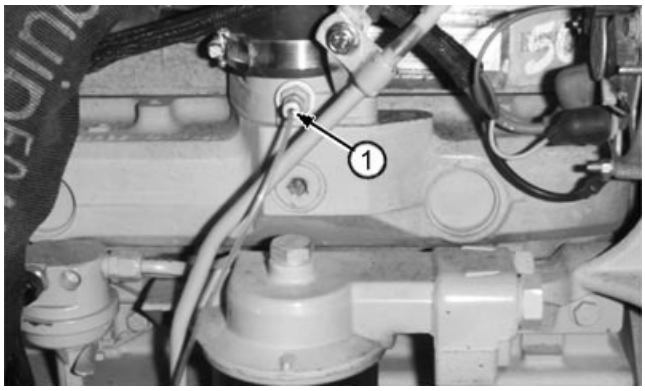

T117494B –UN–01OCT98

Starting Aid Tube

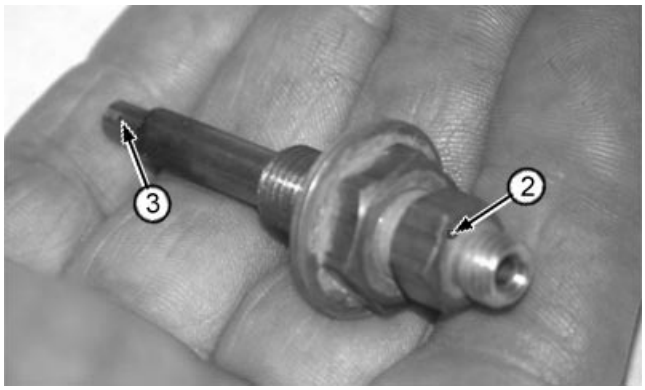

T117496B –UN–13OCT98

Nozzle Holder

DPSG,OUO1004,995 –19–17OCT01–1/1

Fuel System

NOTE: Repair, operation, diagnostics and testing of fuel systems can be found in: CTM207—Mechanical Fuel Systems, CTM170—Level 4 Electronic Fuel Systems with Bosch VP44 Pump, CTM331—Level 12 Electronic Fuel Systems with Stanadyne DE10 Pump, CTM284—Level 1 Electronic Fuel Systems with Delphi/Lucas DP201 Pump, CTM220—Level 11 Electronic Fuel Systems with Denso High Pressure Common Rail or CTM320—Level 14 Electronic Fuel Systems with Denso High Pressure Common Rail.

DPSG,OUO1004,2652 –19–29MAY02–1/1

Remove and Install Starter

NOTE: Refer to CTM77 for repair and testing of starter motor.

CAUTION: Disconnect battery ground strap or serious injury could result if tools ground electrical system.

1. Disconnect ground strap from battery.
2. Disconnect wiring to starter motor.
3. If equipped with RH dipstick tube, remove tube.

NOTE: On on certain applications it maybe necessary to use KJD10213 Starter Motor Removal Tool. as necessary to remove cap screws.

4. Remove mounting cap screws and/or nuts (A).
5. Remove starter motor.
6. Install starter motor and tighten cap screws and/or nuts.
7. Connect starter wiring and ground strap.
8. Install dipstick tube if removed.

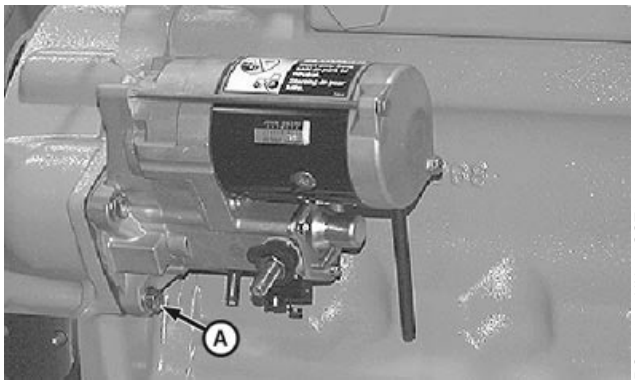

Starter Motor

A—Cap Screw

DPSG,OUO1004,37 –19–08APR98–1/1

Remove and Install Alternator

NOTE: Refer to CTM77 for repair and testing of alternator.

02
100
2

IMPORTANT: Always disconnect battery negative (—) cables before removing alternator or a short circuit could result.

1. Disconnect battery ground (—) cable.
2. Disconnect positive (+) red wire and regulator connector.
3. Remove belt guard.
4. Remove alternator belt using 1/2 in. drive ratchet on belt tensioner.
5. Remove alternator.

NOTE: If mounting plate for alternator and tensioner was removed, install all hardware and tighten cap screws finger tight. Torque plate-to-timing gear cover hardware first, then plate-to-engine hardware.

If equipped, install bushing in rear foot of alternator bracket with flange pointing rearward. Install plain bushing in front foot of alternator bracket flush with face of front foot.

6. Install alternator. Tighten all mounting hardware to specifications.

Specification	
Alternator Strap or Tensioner Support-to-Timing Gear Cover—Torque	25 N•m (221 lb-in.)
Tensioner Support or Alternator Strap Support-to-Alternator Bracket—Torque	63 N•m (48 lb-ft)
Alternator Bracket-to-Block—Torque	70 N•m (52 lb-ft)

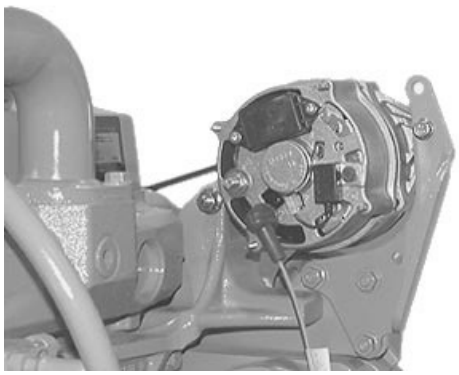

RG9107 –UN–04OCT99

Alternator

Continued on next page

DPSG,OUO1004,39 –19–24NOV99–1/2

NOTE: If engine is equipped with a manual belt tensioner, See MANUAL BELT TENSIONER ADJUSTMENT USING BELT TENSION GAUGE in Group 070 for installing belt and adjusting tension during alternator installation.

7. If removed, install alternator pulley and tighten pulley nut to specifications.

Specification	
Alternator Pulley Nut—Torque	80 N•m (60 lb-ft)

8. Install alternator belt using 1/2 in. drive ratchet on automatic belt tensioner.

9. Install belt guard.

10. Connect positive (+) red wire and regulator connector.

11. Connect battery ground (—) cable.

DPSG,OUO1004,39 –19–24NOV99–2/2

Section 03
Theory of Operation

Contents

Page

Group 120—Base Engine Operation

Base Engine Theory of Operation 03-120-1
General Engine Operation. 03-120-2
General Engine Operation—Continued 03-120-3
Lubrication System Operation 03-120-6
Cooling System Operation. 03-120-10
Head Gasket Joint Construction and Operation. 03-120-14
Air Intake and Exhaust System Operation . . .03-120-16
Air Cleaner Operation 03-120-19
Turbocharger Operation 03-120-20
Variable Geometry Turbocharger (VGT) Operation (Tier 3/Stage IIIA) 03-120-20
How the Turbocharger Is Lubricated 03-120-21

Base Engine Theory of Operation

NOTE: This group covers theory of operation on the base engine only. For theory of operation on mechanical fuel systems, see CTM207 (mechanical fuel systems). For theory of operation on electronic fuel systems, see CTM170 (Level 4 electronic fuel systems with Bosch VP44 pump), CTM331 (Level 12 electronic fuel systems with Stanadyne DE10 pump), CTM284 (Level 1 electronic fuel systems with Delphi/Lucas DP201 pump), CTM220 (Level 11 electronic fuel systems with Denso high pressure common rail) or CTM320—Level 14 Electronic Fuel Systems with Denso High Pressure Common Rail .

RG19661,000000A –19–15JUN05–1/1

General Engine Operation

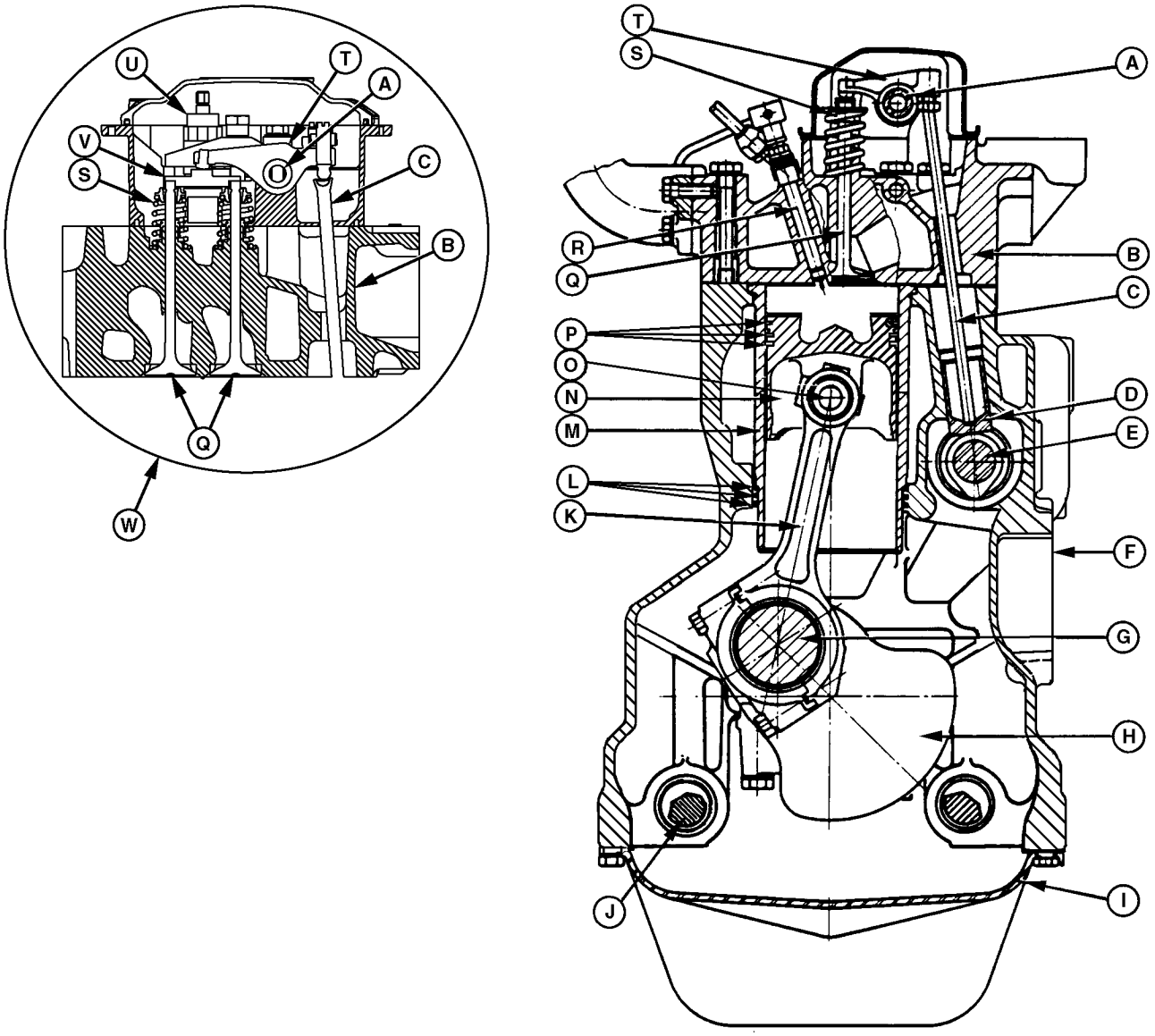

RG12354 –UN–07JUN02

A—Rocker Arm Shaft
B—Cylinder Head
C—Push Rod
D—Camshaft Follower
E—Camshaft
F—Cylinder Block
G—Crankshaft
H—Crankshaft Counterweight
I—Oil Pan
J—Balancer Shafts[1]
K—Connecting Rod
L—Liner Packing Rings
M—Cylinder Liner
N—Piston
O—Piston Pin
P—Piston Rings
Q—Valve
R—Fuel Injection Nozzle
S—Valve Spring
T—Rocker Arm
U—Electronic Injector
V—Valve Bridge
W—Engine With 4-Valve Cylinder Head

[1] 4-Cylinder Engine Option Only

RG19661,000000B –19–15JUN05–1/1

General Engine Operation—Continued

Engines are vertical, in-line, valve-in-head, 4-cycle (stroke) diesel engines.

Direct fuel injection is provided by a rotary-type injection pump, an in-line injection pump, or a high-pressure pump with common rail (4-valve head engines) and 9.5 mm injection nozzles or electronic injectors mounted in cylinder head. The camshaft and injection pump are timed to the crankshaft by the timing gear train.

Some engines are equipped with a turbocharger. The turbocharger uses energy from exhaust gases to compress intake air and force it into the combustion chamber.

The cylinder block (F) is a one-piece casting. The block is available in structural and non-structural configurations.

The camshaft (E) is timed to the crankshaft (G) through the timing gear train. The camshaft rotates in honed bores in the cylinder block. All engines use a bushing in No. 1 camshaft bore. The camshaft lobes determine the duration and lift of each valve, and operate the fuel supply pump on rotary-type injection pumps.

Intake and exhaust valves (Q) are operated by camshaft followers (D), push rods (C) and rocker arm assembly (T). Valve seat inserts in cylinder head are used for intake and exhaust valves.

NOTE: Engines with the four-valve head design (W) have four valves per cylinder—two intake and two exhaust. Each set of intake valves and exhaust valves are actuated by a single rocker arm using a valve bridge (V). (These engines have "16V" or "24V" on their rocker arm cover medallions.)

The crankshaft (G) is a one-piece, heat-treated, nodular-iron or steel forging which operates in replaceable two-piece main bearings. Crankshafts are dynamically balanced and are machined with undercut and rolled fillets. Two-piece main thrust bearing inserts are used to control crankshaft end play.

Cylinder liners (M) are "wet" sleeve type and are individually replaceable. Liner packing rings (L) are used at the lower connection between cylinder block and liners.

Pistons (N) are made of high-grade cast aluminum alloy with internal ribbing. The skirt is cam ground to allow for expansion during operation. The piston crown has a cut-out combustion bowl with a truncated cone center. All piston rings (P) are located above the piston pin. Two compression rings and one oil control ring are used. The top compression ring is a keystone-shaped ring, located close to the top of the piston for improved engine performance.

The hardened, fully-floating piston pins (O) are held in place by snap rings. Spray jets (piston cooling orifices) in cylinder block spray pressurized oil on the underside of the piston to lubricate piston pins and cool pistons.

The forged steel connecting rods (K) have replaceable pin bushing and bearing inserts. Some connecting rods have a tapered pin-end while others have a straight pin-end. Rods and caps have a tongue-and-groove joint on earlier engines and a PRECISION JOINT™ on later engines.

The engine is equipped with a gear-driven oil pump and full-flow oil filter. On some engines the oil filter has an internal bypass valve while others use a bypass valve in the filter header. The bypass valve opens if the filter element becomes restricted. Engines are equipped with an oil cooler mounted on the right side of the cylinder block. The engine is equipped with a pressure regulator valve to relieve excessive pressure build-up in the main oil gallery, and a bypass valve to prevent oil starvation if the oil cooler and filter become plugged.

PRECISION JOINT is a trademark of Deere & Company

Continued on next page

Balancer shafts (J) are used on some four-cylinder engines to reduce vibration. The two shafts rotate on bushings in cylinder block and are counter-rotating at twice engine speed.

The engine has a pressurized cooling system, consisting of radiator, coolant pump, multi-blade fan, and one, two or three thermostats.

RG19661,000000C –19–15JUN05–2/2

Lubrication System Operation

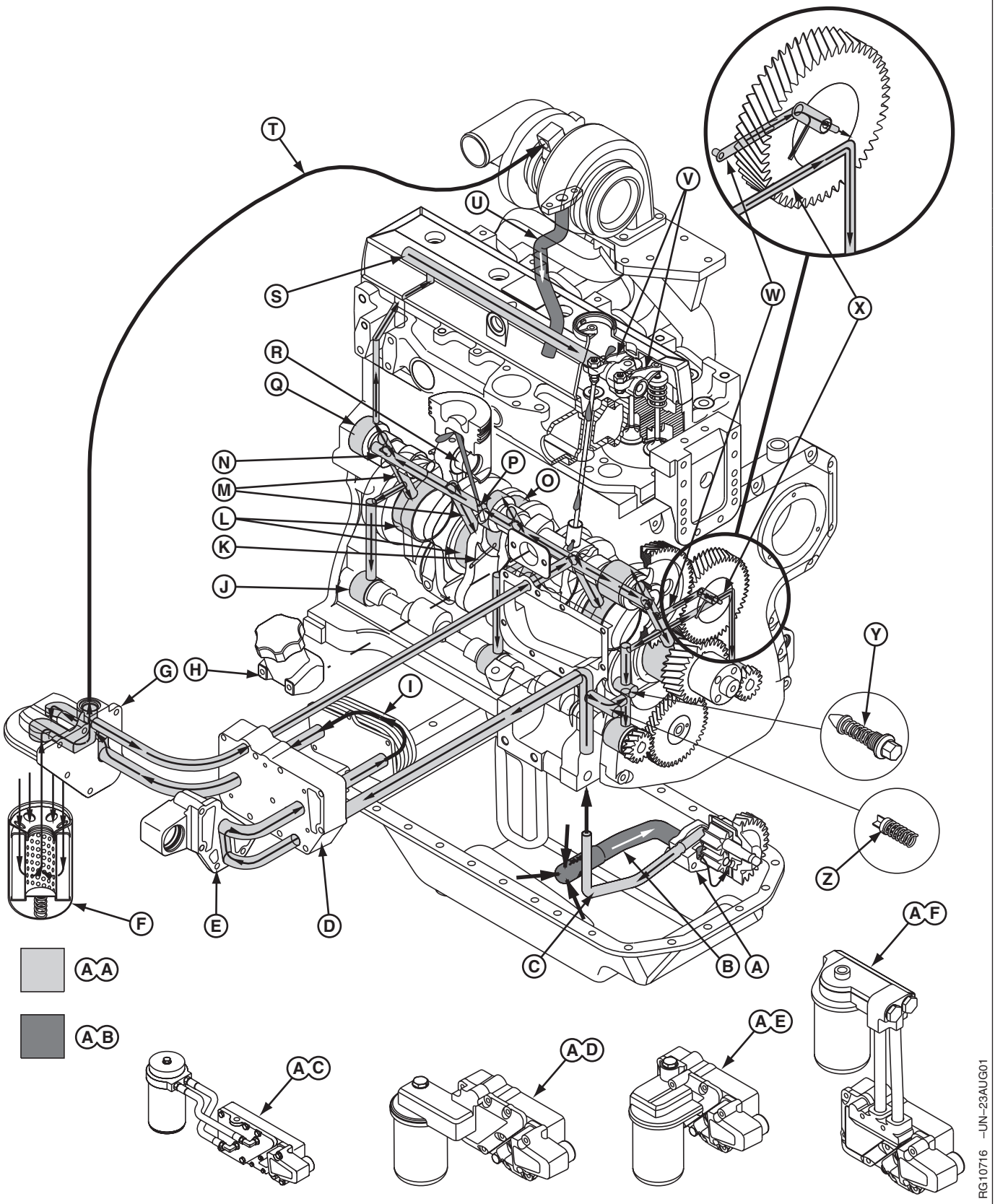

Lubrication System - Two Valve Cylinder Head Shown

Continued on next page

RG19661,000000D –19–15JUN05–1/4

A—Oil Pump
B—Oil Suction Line
C—Oil Outlet Tube
D—Oil Cooler Housing
E—Coolant Passage Adapter
F—Oil Filter
G—Oil Filter Header/Adapter[1]
H—Oil Fill Tube
I—Oil Cooler
J—Balancer Shaft Bushings
K—Crankshaft Drilled Cross-Passages
L—Main Bearing Bushings
M—Oil Passages
N—Main Oil Gallery
O—Connecting Rod Bearings
P—Piston Cooling Orifice
Q—Camshaft Bushings
R—Piston Pin and Bushing
S—Rocker Arm Shaft
T—Turbocharger Oil Supply Line
U—Turbocharger Drain Line
V—Rocker Arms
W—Machined Groove
X—Cross-Drillings
Y—Oil Pressure Regulating Valve (Early Version Shown)
Z—Oil Bypass Valve
AA—Pressurized Oil
AB—Pressure-Free Oil
AC—Remote Mount Filter Assembly
AD—Low-Mount Rear Vertical Oil Filter Assembly
AE—Low-Mount Front Vertical Oil Filter Assembly
AF—High-Mount Vertical Oil Filter Assembly

03
120
7

[1] Some oil filter headers/adapters have a built-in filter bypass valve.

Continued on next page

RG19661,000000D –19–15JUN05–2/4

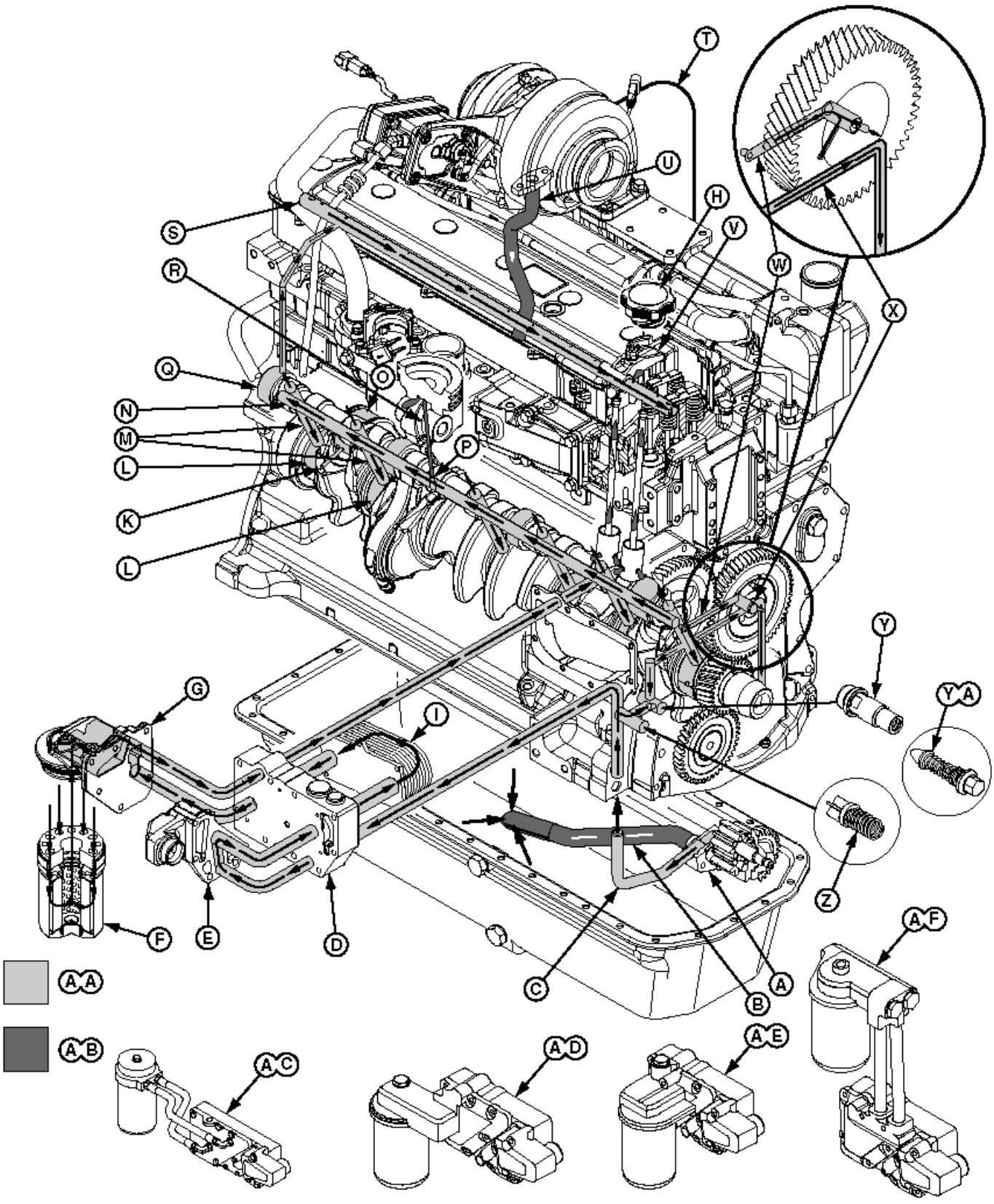

Lubrication System - Four Valve Cylinder Head Shown

Continued on next page

A—Oil Pump
B—Oil Suction Line
C—Oil Outlet Tube
D—Oil Cooler Housing
E—Coolant Passage Adapter
F—Oil Filter
G—Oil Filter Header/Adapter[1]
H—Oil Fill Tube
I—Oil Cooler
K—Crankshaft Drilled Cross-Passages
L—Main Bearing Bushings
M—Oil Passages
N—Main Oil Gallery
O—Connecting Rod Bearings
P—Piston Cooling Orifice
Q—Camshaft Bushings
R—Piston Pin and Bushing
S—Rocker Arm Shaft
T—Turbocharger Oil Supply Line
U—Turbocharger Drain Line
V—Rocker Arms
W—Machined Groove
X—Cross-Drillings
YA—Oil Pressure Regulating Valve (Later Version Shown)
Z—Oil Bypass Valve
AA—Pressurized Oil
AB—Pressure-Free Oil
AC—Remote Mount Filter Assembly
AD—Low-Mount Rear Vertical Oil Filter Assembly
AE—Low-Mount Front Vertical Oil Filter Assembly
AF—High-Mount Vertical Oil Filter Assembly

The engine lubrication system consists of a positive displacement gear-driven oil pump (A), full-flow oil filter (F), oil cooler (I), oil pressure regulating valve (Y), and an oil bypass valve (Z).

The oil pump pulls oil from the oil pan sump through a strainer and a suction line (B). The pump forces oil through the outlet tube (C) into a vertical drilling in the cylinder block, and up to the oil cooler and filter. Oil filters can be mounted on the engine in various locations (AD—AF). A remote-mounted oil filter (AC) is also optional. After flowing through the cooler and filter, oil flows into the main oil gallery (N).

The main oil gallery runs the length of the cylinder block and delivers oil to oil passages (M) that feed the camshaft bushings (Q) and main bearing bushings (L). The cross-drillings (X) intersect with those same oil passages and feed oil to the balancer shaft bushings (J).

From the main bearings, oil flows to the connecting rod bearings (O) through drilled cross-passages (K) in the crankshaft between the main journals and connecting rod journals. Oil from the main bearing also supplies oil to the piston cooling orifices (P).

Oil from the piston cooling orifices sprays on the underside of the piston to keep the piston crown cool. The oil spray also provides splash lubrication for the piston pin and bushing (R) by splashing oil into a hole drilled in the top end of the connecting rod.

At the rear of the cylinder block, oil flows from the rear camshaft bushing (Q), up through the cylinder head, and into the rocker arm shaft (S). Oil flows through the rocker arm shaft and lubricates each of the rocker arms (V). Oil drips from the rocker arms to lubricate the adjusting screws, push rods, and camshaft followers.

At the front of the cylinder block, oil flows from the oil passage into a machined groove (W) in the front face of the block. This groove connects with the upper idler gear shaft to provide oil to the idler gear bushing. The lower idler gear bushing is splash lubricated.

The turbocharger oil supply line (T) supplies oil to the turbocharger from filtered side of oil filter adapter or a cross-drilled passage in the main oil galley. Oil returns from the turbocharger through the drain line (U).

[1] Some oil filter headers/adapters have a built-in filter bypass valve.

RG19661,000000D –19–15JUN05–4/4

Cooling System Operation

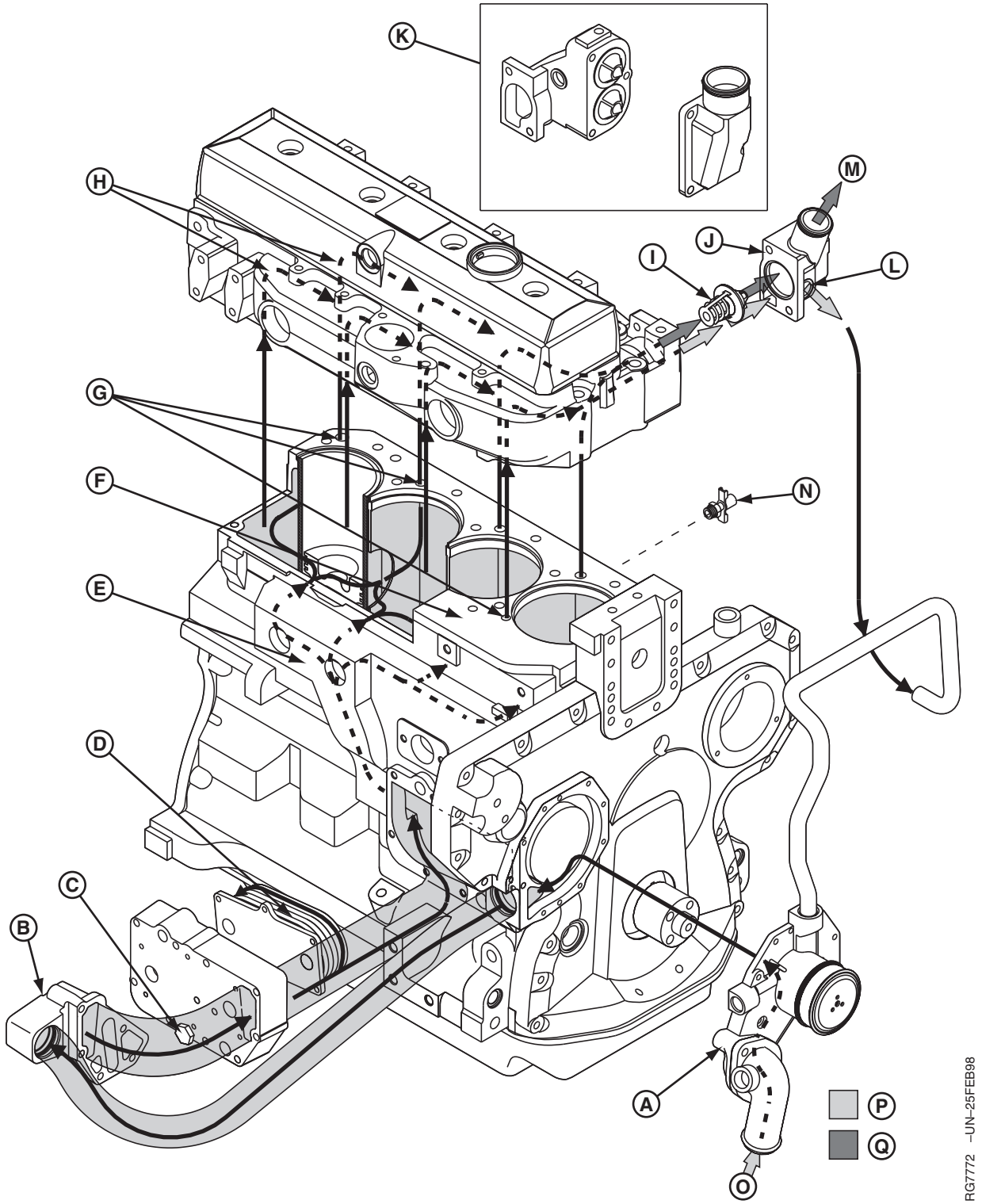

How Engine Cooling System Works

Continued on next page

A—Coolant Pump
B—Coolant Passage Adapter
C—Oil Cooler Drain Plug
D—Oil Cooler Plates
E—Main Coolant Gallery
F—Coolant Jacket
G—Block Deck Passages
H—Passages
I—Thermostat(s)
J—Coolant Manifold/Thermostat Housing
K—Dual Thermostat Assembly
L—Bypass Circuit
M—To Radiator Top Tank
N—Drain Valve
O—Suction Side of Coolant Pump
P—High Temperature Coolant
Q—Low Temperature Coolant

Continued on next page

RG19661,000000E –19–15JUN05–2/4

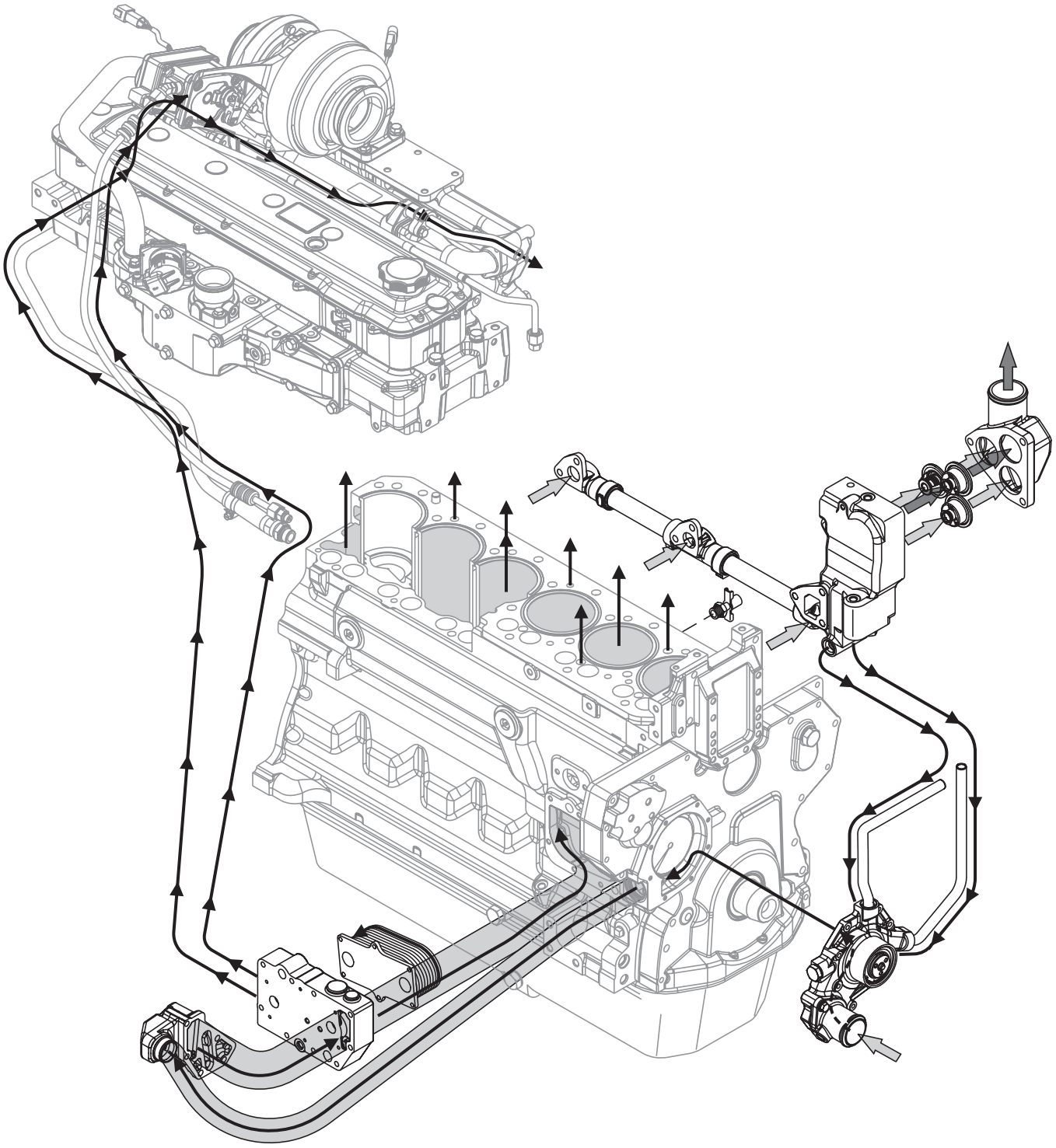

RG13957 –UN–14JUN05

Engine Coolant Flow with EGR Cooler
(Tier 3/Stage IIIA Engines)

The cooling system includes the radiator, coolant pump (A), and thermostat(s) (I).

Continued on next page

Coolant is circulated from the coolant pump into the coolant passage adapter (B) and circulates around the oil cooler plates (D). From the oil cooler, coolant flows into the main coolant gallery (E). From the gallery coolant flows into the coolant jacket (F), around the cylinder liners, up through the block deck passages (G), and into the cylinder head. In the cylinder head, the coolant flows through passages (H) around the intake and exhaust ports, valve seats, and injection nozzles. Coolant flows toward the front end of the cylinder head and exits through the coolant manifold/thermostat housing (J). Engines may be equipped with a dual thermostat assembly (K).

During the warm-up period, thermostat(s) (I) are closed and coolant is directed through a bypass circuit (L) into suction side of coolant pump. The coolant continues circulating through the cylinder block, cylinder head, and coolant pump to provide a uniform and fast warm-up period.

Once the engine has reached operating temperature, the thermostat(s) open and allow coolant to flow through the upper radiator hose to the radiator top tank (M). Coolant circulates through the radiator, dissipates heat, and then flows out of the radiator through the lower hose and into the suction side (O) of the coolant pump. Coolant continues flowing through the engine and radiator circuit until the coolant temperature drops below the thermostat opening temperature.

On engines equipped with an EGR cooler, a portion of the coolant is circulated from the oil cooler, through the EGR cooler and back to the thermostat housing. Coolant flow is opposite exhaust gas flow and is controlled with a separate thermostat located in the thermostat housing. During the warm-up period, the EGR thermostat is closed and coolant circulates through a bypass circuit in the thermostat housing to the suction side of the water pump.

RG19661,000000E –19–15JUN05–4/4

Head Gasket Joint Construction and Operation

The head gasket joint consists of the following components:

- Cylinder head gasket
- Cylinder head (A)
- Cylinder block (E)
- Cylinder liners (C)
- Cylinder head cap screws (B)

The head gasket must form an air-tight seal between cylinder liners and cylinder head that can withstand the temperatures and pressures of the combustion process. The gasket must also form a liquid-tight seal between the cylinder head and cylinder block to retain coolant and oil in their respective passages. The gasket (F) is constructed of thin, formed sheets of steel-inserted, non-asbestos material. The surface of gasket is treated to improve liquid sealing and anti-stick characteristics. A fire ring combustion seal (G) is located at each cylinder bore and is held in place by a U-shaped stainless steel flange (H).

The cylinder head and block must be flat to provide an even clamping pressure over the entire surface of gasket, and must have the proper surface finish to keep gasket material from moving in the joint. Dowel pins (D) are used to properly locate head gasket on block.

The cylinder liners must protrude evenly from top of cylinder block the specified amount to provide adequate clamping force on fire ring of each cylinder.

The cap screws must be proper length, made of proper material, and be tightened to proper torque in order to provide an adequate clamp load between other joint components.

Each of the above components contributes to the integrity of the head gasket joint. If any of these components do not conform to specifications, gasket joint may fail, resulting in combustion leaks, coolant leaks, or oil leaks.

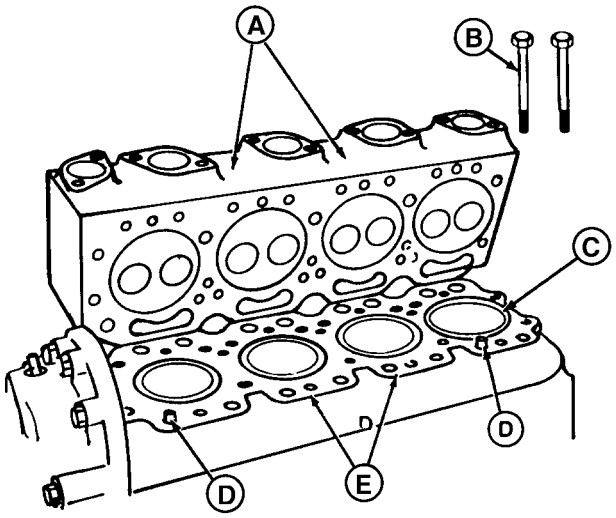

RG6433 –UN–03NOV97

Head Gasket Joint Construction and Operation

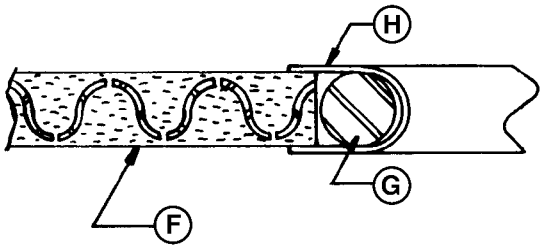

RG6430 –UN–03NOV97

Head Gasket Joint Construction and Operation

A—Cylinder Head
B—Cylinder Head Cap Screws
C—Cylinder Liners
D—Dowel Pins
E—Cylinder Block
F—Gasket Body
G—Fire Ring Combustion Seal
H—Stainless Steel Flange

Continued on next page

Operating conditions such as coolant, oil, and combustion temperatures, and combustion pressures can reduce the ability of the head gasket joint to function properly. Failure of head gasket and mating parts may occur when coolant and oil temperatures become excessive, or when abnormally high combustion temperatures and pressures persist.

RG,105,JW7658 –19–21NOV97–2/2

Air Intake and Exhaust System Operation

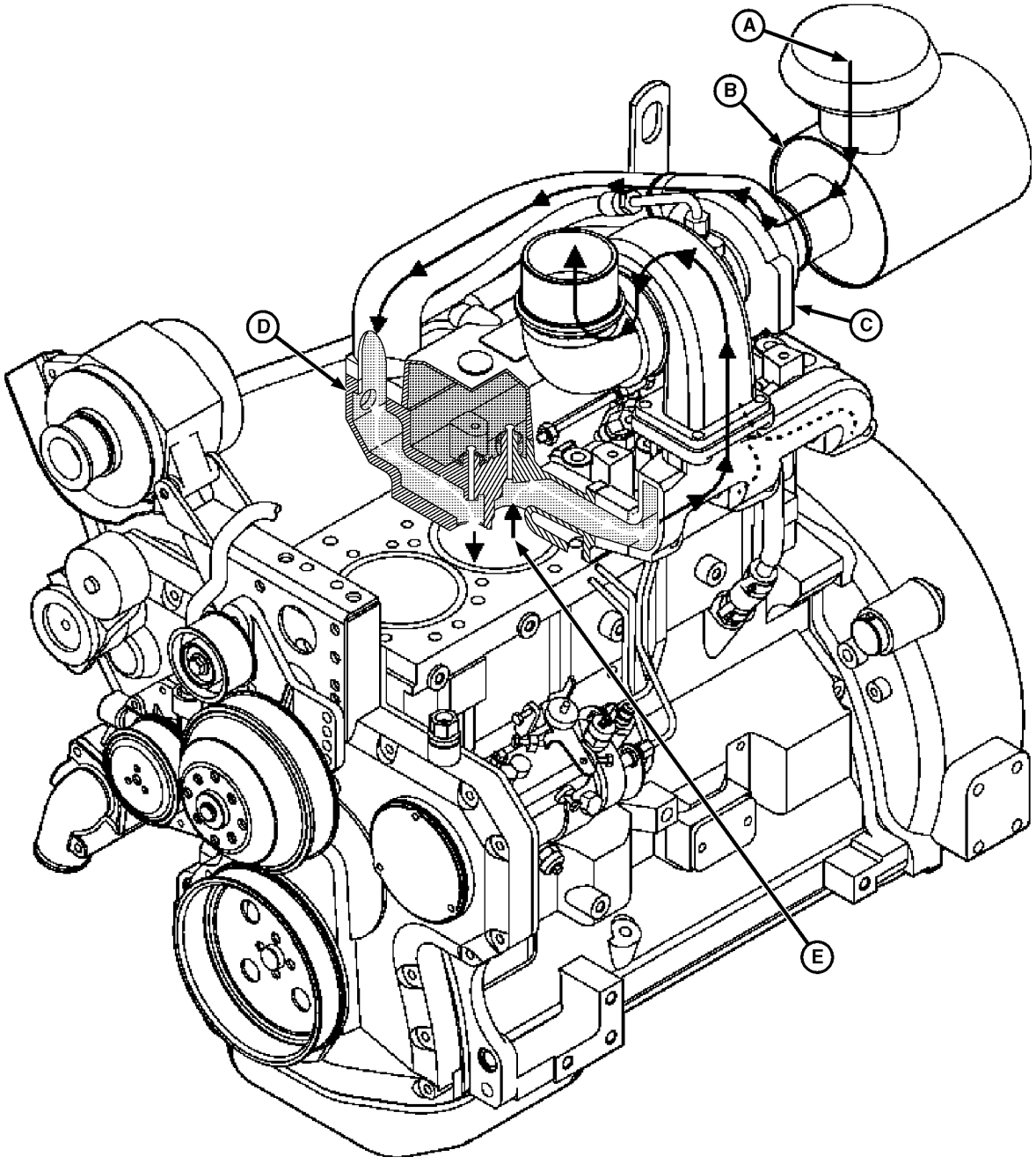

RG12438 –UN–25NOV03

How Air Intake and Exhaust Systems Work - Two Valve Head Shown

A—Outside Intake Air
B—Air Cleaner
C—Turbocharger
D—Intake Side of Cylinder Head
E—Exhaust

Continued on next page

RG19661,000000F –19–15JUN05–1/3

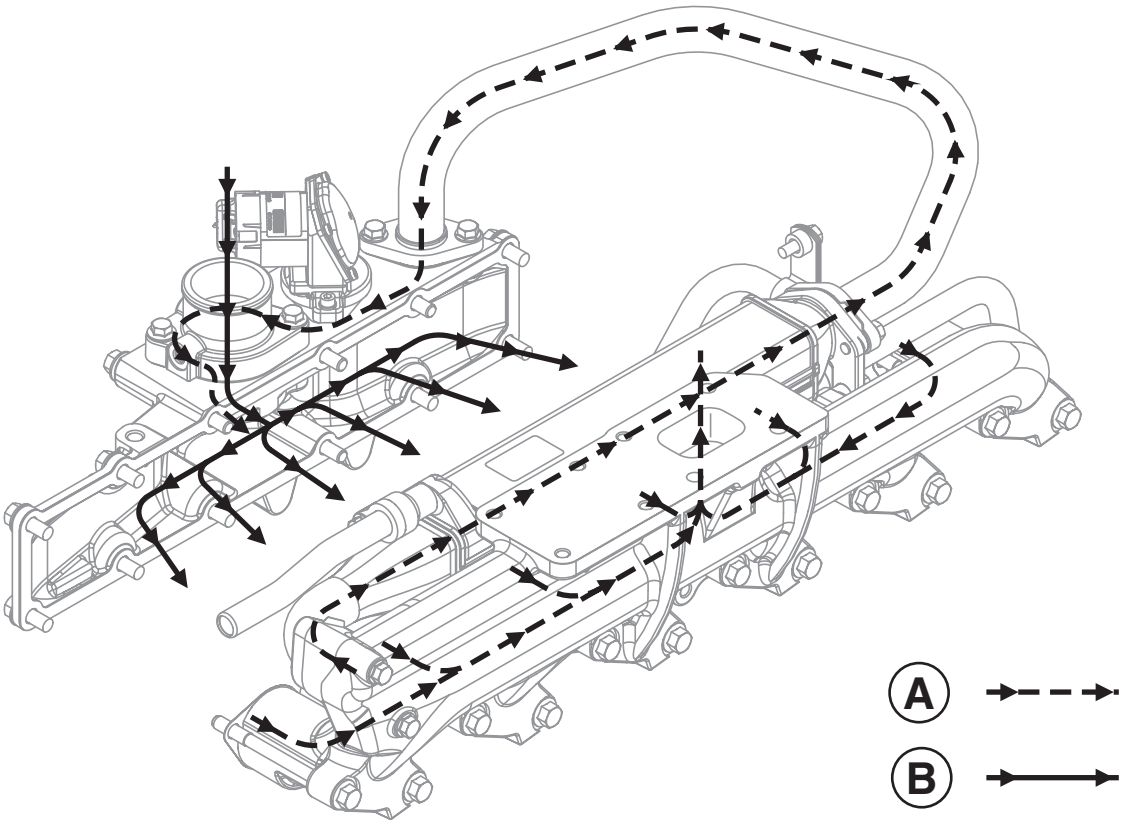

RG13958 –UN–27JUN05

Intake and Exhaust Gas Flow in EGR System (Tier 3/Stage IIIA Engines)

A—Recirculated Exhaust Gas Flow **B—Intake Air Flow**

Engine suction draws dust-laden outside air (A) through an air inlet stack into the air cleaner (B). Air is filtered through dry type primary and secondary (safety) filter elements in the air cleaner canister. Clean air travels through the air intake hose to the turbocharger (C) and into the intake side of the cylinder head (D).

Exhaust (E), drives the turbocharger to deliver a larger quantity of air to meet the engine requirements than what could be delivered under naturally aspirated (non-turbocharged) conditions.

On some engines, an air-to-air aftercooler cools the turbocharger compressor discharge air by routing it through a heat exchanger before it enters the engine. The heat exchanger uses no liquid coolant but relies on air flow to cool the charge air.

PowerTech Plus™ engines are equipped with an exhaust gas recirculation (EGR) system and a variable geometry turbocharger (VGT) to meet Tier 3/Stage IIIA emission levels.

New design features to meet Tier 3/Stage IIIA emission levels are Exhaust Gas Recirculation (EGR) and the Variable Geometry Turbocharger (VGT). The ERG and VGT are common features in all John Deere PowerTech Plus™ engines.

Continued on next page

The EGR and VGT are both performance and emission control features. The variable geometry turbocharger has adjustable vanes in the exhaust turbine housing. These vanes, controlled by a coolant-cooled electronic actuator, open and close to direct and recirculate exhaust gases. The gases then pass through a cooler which is attached to the exhaust manifold. The cooled exhaust gas are mixed with fresh air by the EGR Valve located in the intake manifold. The Engine Control Unit (ECU) controls the quanity of exhaust gas to be mixed with fresh intake air for combustion. Under full load conditions as much as 10—12% of the intake air is recirculated exhaust gases. The recirculation of exhaust gas allow the engine to run with higher boost pressure, increasing the power output while reducing emissions.

TheVGT has foils or vanes located on pins on the outside diameter of the turbine wheel. These vanes are adjustable, which allows exhaust gas pressure to be increased or decreased based on the engine load demand and speed. The ECU controls an actuator that is part of the turbocharger assembly. The actuator adjusts the vanes to assure proper exhaust pressures for the correct amount of EGR and fresh air mixing. The actuator is cooled with engine coolant plumbed from the oil cooler housing and returned to the thermostat housing. The variable output of the VGT provides the ability to increase low speed torque, provide a quicker transient response and increase peak torque while improving fuel economy.

As engine speed and load demands increase, the ECU signals the VGT actuator to close the vanes on the turbine wheel. This increases exhaust gas pressure and velocity which increases engine boost pressure. This increase in pressure limits smoke and reduces emission particles released to the atmosphere.

The EGR cooler is bolted to the exhaust manifold. This cooler operates much like a radiator or charge air cooler, having internal fins which allow circulation of engine coolant to cool the exhaust gas. The cooler is a counterflow design, as engine coolant flows in the opposite direction of the exhaust gas. After engine coolant passes through the cooler, it is returned to the thermostat housing. The exhaust gas enter the cooler at approximately 600° C (1112° F) and exit at approximately 200° C (392° F).

The cooled exhaust gas passes through an EGR valve which is located in the intake manifold. The function of the EGR valve, controlled by the engine ECU, is to mix given volumes of exhaust gas with fresh intake air. The mixture of exhaust gas and fresh intake air serves two purposes: (1) . The VGT increases engine boost as the vanes close allowing more air to be introduced into the combustion chamber. This, in turn, allows more fuel to be introduced to the combustion process, increasing power output. (2). Diluting the intake air with as much as 10—12% exhaust gas (full load conditions) helps control NOX emissions released into the atmosphere after combustion.

The EGR valve is functional only when the engine is under load and the coolant is at operating temperature. At start-up when the engine coolant is cold, and under no-load or light load conditions, the valve remains closed and exhaust gases exit through the muffler. When engine load and/or speed demands reach a predetermined level, the ECU signals the EGR valve to open. The valve then mixes the proper amount of cooled exhaust gas with cooled intake air and releases this mixture to the intake manifold for combustion.

The EGR valve, VGT, exhaust and intake manifold conditions are closely monitored by sensors. The sensors are monitored by the ECU and fault codes are generated if conditions exceed design guidelines. Sensors include: exhaust gas temperature, charge air temperature, mixed air (intake air and exhaust gas) temperature, intake manifold air pressure and exhaust manifold pressure.

Air Cleaner Operation

Under suction generated by the engine, unfiltered air flows through air inlet tube (A) and is forced into a high-speed centrifugal motion by tilted fins in the element. By this circulating action most of the dust and dirt particles are separated from the air and collected in the dust unloading valve (D).

The remaining dirt is removed as the air flows through the primary element (C) and the secondary (safety) filter (B) before being drawn into the engine.

The secondary (safety) filter ensures that, should primary element fail, no unfiltered air is drawn into the engine.

A—Air Inlet Tube
B—Secondary (Safety) Filter
C—Primary Element
D—Dust Unloading Valve

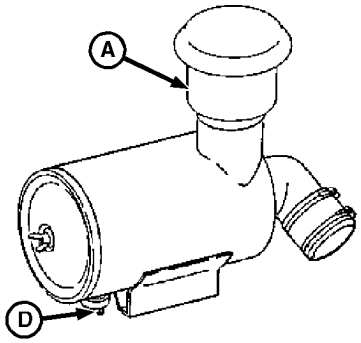

RG9097 –UN–27MAR98

Air Cleaner Assembly

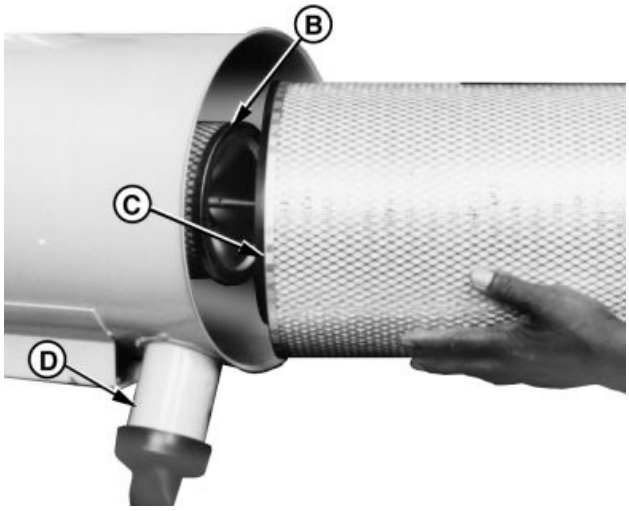

RG7766B –UN–10NOV97

Air Cleaner Primary and Secondary Elements

RG,110,JW7672 –19–24NOV97–1/1

Turbocharger Operation

The turbocharger, which is basically an air pump that is driven by exhaust gases, allows the engine to produce added power without increasing displacement. Turbochargers are specially matched for the power ratio requirements of each specific application.

The turbine wheel (C) is driven by the hot engine exhaust gases. These gases flowing through the turbine housing (B) act on the turbine wheel causing shaft (A) to turn.

Compressor wheel (E) brings in filtered air and discharges the compressed air into the intake manifold where it is then delivered to engine cylinders.

Engine oil under pressure from the engine lubrication system is forced through passages in center housing (D) to bearings.

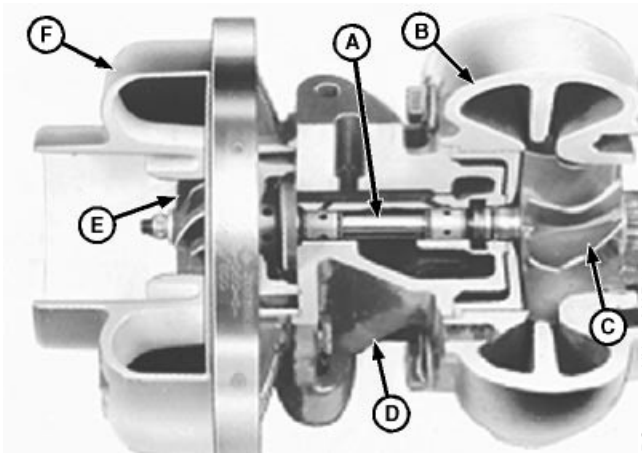

Turbocharger Components

A—Shaft
B—Turbine Housing
C—Turbine Wheel
D—Center Housing
E—Compressor Wheel
F—Compressor Housing

RG,110,JW7669 –19–24NOV97–1/1

Variable Geometry Turbocharger (VGT) Operation (Tier 3/Stage IIIA)

The variable geometry turbocharger on Tier 3/Stage IIIA engines functions the same as the turbocharger operation listed above but with an additional set of vanes on the outside diameter of the turbine wheel. These vanes are adjustable, allowing the exhaust gas pressure to be increased or decreased based on engine load and speed. These vanes are controlled by an actuator which monitors engine operation. The turbocharger actuator is cooled with engine coolant from the oil cooler housing and returned to the thermostat housing.

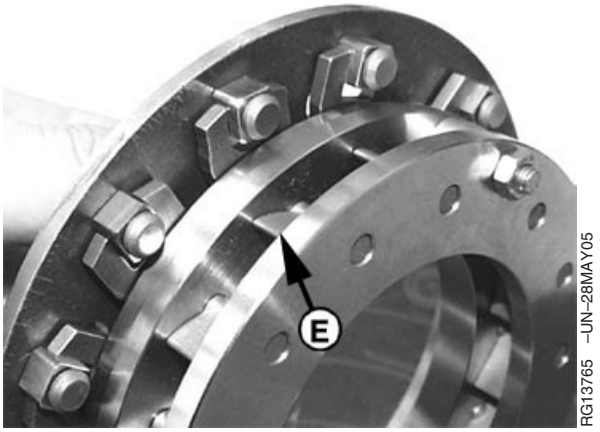

VG Turbocharger Vanes

E—Adjustablle Vanes

RG19661,0000043 –19–28MAR05–1/1

How the Turbocharger Is Lubricated

Engine oil under pressure from the engine lubrication system is pumped through a passage in the bearing housing and directed to the bearings, thrust plate, and thrust sleeve. Oil is sealed from the compressor and turbine by a piston ring at both ends of the bearing housing.

The turbocharger contains two floating bearings. These bearings have clearance between the bearing OD and the housing bore as well as clearance between the bearing ID and the shaft OD. These clearances are lubricated by the oil supply pressure oil (A) and the bearings are protected by a cushion of oil. Discharge oil (B) drains by gravity from the bearing housing to the engine crankcase.

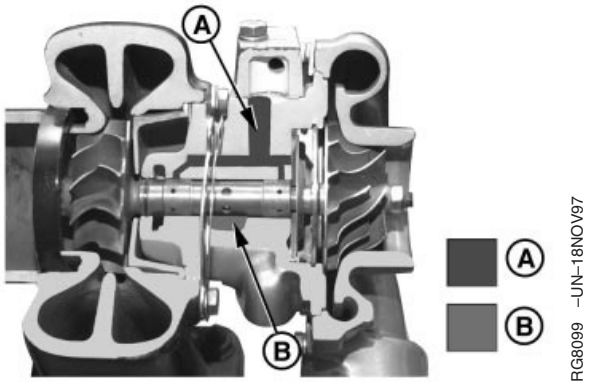

Turbocharger Pressure and Discharge Oil

A—Pressure Oil
B—Discharge Oil

RG,110,JW7668 –19–23MAY00–1/1

Section 04
Diagnostics

Contents

Page

Group 150—Observable Diagnostics and Tests
About This Section of the Manual 04-150-1
Guideline for Acceptable Oil Consumption . . .04-150-2
4.5L/6.8L - L1 - Excessive Oil Consumption 04-150-2
4.5L/6.8L - L2 - Engine Oil Pressure Low 04-150-6
4.5L/6.8L - L3 - Engine Oil Pressure High. . . .04-150-8
4.5L/6.8L - C1 - Engine Coolant Temperature Above Normal 04-150-9
4.5L/6.8L - C2 - Engine Coolant Temperature Below Normal 04-150-10
4.5L/6.8L - C3 - Coolant in Oil or Oil in Coolant 04-150-10
Test Engine Compression Pressure 04-150-11
Test Engine Cranking Speed. 04-150-14
Dynamometer Test 04-150-15
Engine Oil Consumption 04-150-16
Check Engine Oil Pressure 04-150-17
Check for Excessive Engine Crankcase Pressure (Blow-By) 04-150-19
Check for Turbocharger Oil Seal Leak 04-150-20
Inspect Thermostat and Test Opening Temperature 04-150-21
Pressure Test Cooling System and Radiator Cap 04-150-22
Pressure Test EGR Cooler for Air Leaks. . . .04-150-23
Check for Head Gasket Failures 04-150-24
Check and Service Cooling System 04-150-27
Check Air Intake System. 04-150-29
Measure Intake Manifold Pressure (Turbocharger Boost for Tier 3/Stage IIIA Engines) 04-150-30
Measure Intake Manifold Pressure (Turbocharger Boost/Power Check) 04-150-30
Check for Intake and Exhaust Restrictions 04-150-33
Test for Intake Air Leaks 04-150-34
Check for Exhaust Air Leaks (Turbocharged Engines) 04-150-35
Test Turbocharger Wastegate 04-150-36
Test Air Filter Restriction Indicator Switch . . .04-150-36

About This Section of the Manual

This section of the manual contains necessary information to diagnose some base engine, all lubrication system and all cooling system problems. This section is divided into two areas: diagnosing malfunctions and testing procedures. The diagnosing malfunction areas are further divided into the following headings, containing the following symptoms:

- **(L)** Diagnosing Lubrication System Malfunctions:
  - L1 - Excessive Oil Consumption
  - L2 - Engine Oil Pressure Low
  - L3 - Engine Oil Pressure High
- **(C)** Diagnosing Cooling System Malfunctions:
  - C1 - Coolant Temperature Above Normal
  - C2 - Coolant Temperature Below Normal
  - C3 - Coolant in Oil or Oil in Coolant

Procedures for diagnosing some of the above symptoms are formatted such that a test or repair is recommended, then, based on the results, another test or repair is recommended. Other symptoms are formatted in a symptom - problem - solution format. In these symptoms, the problems are arranged in the most likely or easiest to check first. Symptoms arranged in both formats refer to testing procedures in the second part of this section. The second part of this section contains the following testing procedures:

- Base Engine Testing Procedures:
  - Test Engine Compression Pressure
  - Test Engine Cranking Speed
  - Dynamometer Test
- Lubrications System Testing Procedures:
  - Engine Oil Consumption
  - Check Engine Oil Pressure
  - Check for Excessive Crankcase Pressure (Blow-By)
  - Check for Turbocharger Oil Seal Leak
- Cooling System Testing Procedures:
  - Inspect Thermostat and Test Opening Temperature
  - Pressure Test Cooling System and Radiator Cap
  - Check for Head Gasket Failures
  - Check and Service Cooling System
- Air Supply and Exhaust Systems Testing Procedures:
  - Check Air Intake System
  - Measure Intake Manifold Pressure (Turbo Boost)
  - Check for Intake and Exhaust Restrictions
  - Test for Intake Air Leaks
  - Check for Exhaust Leaks (Turbocharger Engines)
  - Test Turbocharger Wastegate
  - Test Air Filter Restriction Indicator Switch

DPSG,RG40854,512 –19–06MAR00–1/1

Guideline for Acceptable Oil Consumption

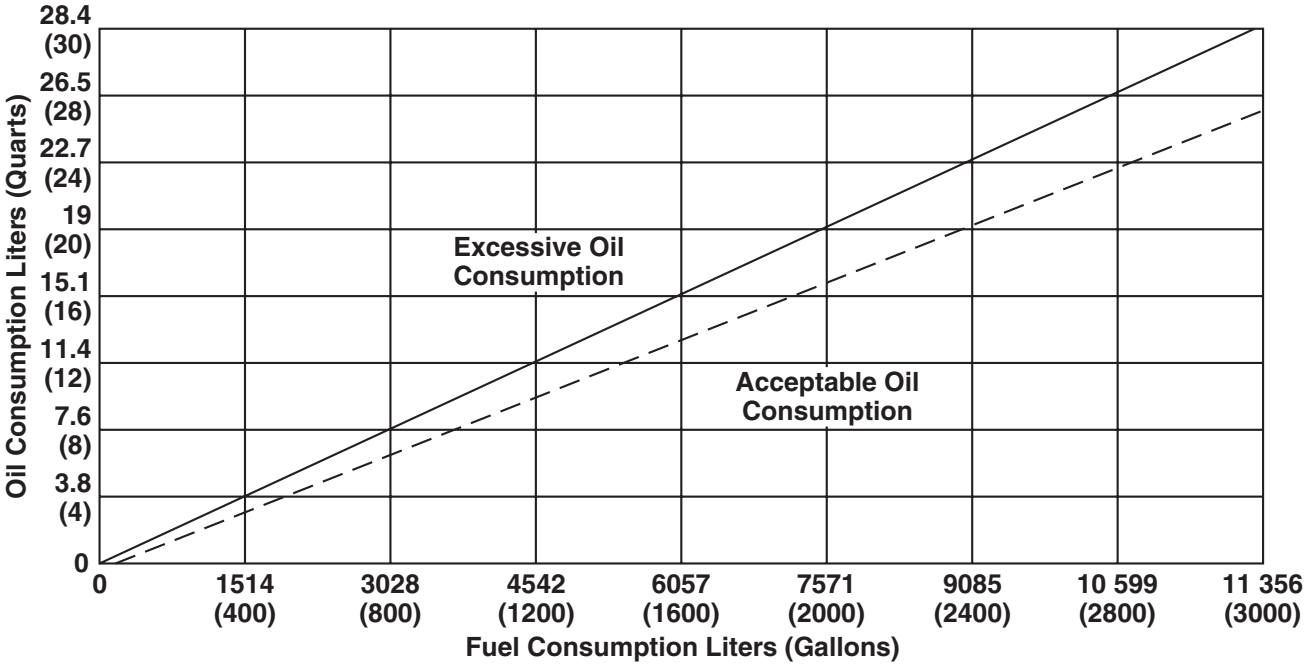

ENGINE FUEL/OIL CONSUMPTION RATIO

Engine Oil/Fuel Consumption Ratio

Oil consumption complaints are usually reported as how many liters (quarts) are used per day. This information is not very specific. Two questions to consider are:

- How long is a day?
- How hard did the engine work in this day?

A much better method of checking oil consumption is based on oil usage compared to the amount of fuel burned (see chart). Long-term oil consumption (three oil drain intervals after engine break-in) should not exceed 0.95 L (1 qt) of oil for every 379 L (100 gal) of fuel burned.

IMPORTANT: If the engine fuel/oil consumption ratio falls below the dashed line, oil consumption is acceptable. If the ratio is between the solid and dashed line, oil consumption is still acceptable but the oil level and usage should be monitored closely. If the ratio is above the solid line, oil consumption is excessive and action should be taken to determine the cause.

For example, if an engine uses less than 0.95 L (1 qt) of oil for every 379 L (100 gal) of fuel burned, it is within acceptable operating parameters. If the engine begins to use 0.95 L (1 qt) of oil or more for every 379 L (100 gal) of fuel burned, you should investigate to determine the cause of the excess oil consumption.

OUO1040,00003FC –19–17AUG01–1/1

4.5L/6.8L - L1 - Excessive Oil Consumption

DPSG,RG40854,519 –19–06MAR00–1/1

4.5L/6.8L - L1 - Excessive Oil Consumption

Before using this diagnostic procedure:

Check for too low or too high engine oil level.

Check for too low viscosity, or coolant- or fuel-diluted engine oil.

Check for excessive external oil leaks.

– – –1/1

❶ **Check Oil in Coolant**	Check the coolant for signs of oil.	**No oil found in coolant:** Go to 2. **Oil found in coolant:** See 4.5L/6.8L - C3 - COOLANT IN OIL OR OIL IN COOLANT later in this group. – – –1/1

❷ **Check for Excessive Crankcase Pressure (Blow-By)**	Check for excessive crankcase pressure. See CHECK FOR EXCESSIVE ENGINE CRANKCASE PRESSURE (BLOW-BY) later in this group.	**No fumes and no dripping oil observed:** Go to 3. **Excessive fumes or dripping oil observed; appears to be caused by boost pressure (if equipped with turbocharger):** Check the turbocharger, repair/replace as needed. See TURBOCHARGER FAILURE ANALYSIS in Group 080 in Section 2 of this manual. **Excessive fumes or dripping oil observed; does not appear to be caused by boost pressure (if equipped with turbocharger):** Excessive blow-by, not caused by boost pressure is most likely caused by faulty piston rings/cylinder liners not providing an adequate combustion seal. Perform a compression test to verify this is the case. See TEST ENGINE COMPRESSION PRESSURE later in this group. – – –1/1

❸ **Turbocharger Oil Seal Leak Check**	*NOTE: This check is not needed for non-turbocharged ("D" engines). For these engines Go to 4.* Check for turbocharger oil seal leaks. See CHECK FOR TURBOCHARGER OIL SEAL LEAK later in this group.	**No signs of oil leakage:** Go to 4. **Signs of oil leakage present:** Investigate problems associated with oil leakage as outlined in the test procedure, perform necessary repairs, and retest. – – –1/1

❹ **Pistons, Rings, Cylinder Liners Check**	At this point, the most likely cause of excessive oil consumption is one of the following failures in the pistons, rings, and/or cylinder liners or in the valve guides. Check the most likely items as needed. • Oil control rings worn or broken • Scored cylinder liners or pistons • Piston ring grooves excessively worn • Insufficient piston ring tension • Piston ring gaps not staggered • Cylinder liners glazed (insufficient load during engine break-in) • Worn valve guides or stems	Problem found with pistons, rings, and/or liners or valve guides. Repair problem as necessary. – – –1/1

4.5L/6.8L - L2 - Engine Oil Pressure Low

Symptom	Problem	Solution
4.5L/6.8L - L2 - Engine Oil Pressure Low	Low crankcase oil level	Fill crankcase to proper oil level.
	Clogged oil cooler or filter	Remove and inspect oil cooler. See REMOVE, INSPECT, AND INSTALL OIL COOLER in Group 060 in Section 2 of this manual. Replace oil filter.
	Excessive oil temperature	Remove and inspect oil cooler. See REMOVE, INSPECT, AND INSTALL OIL COOLER in Group 060 in Section 2 of this manual.
	Defective oil pump	Remove and inspect oil pump. See REMOVE ENGINE OIL PUMP in Group 060 in Section 2 of this manual.
	Incorrect oil	Drain crankcase and refill with correct oil.
	Oil pressure regulating valve failure	Inspect oil pressure regulating valve. See REMOVE AND INSTALL OIL PRESSURE REGULATING VALVE in Group 060 in Section 2 of this manual.
	Broken piston spray jet	Replace piston spray jet. See REMOVE, INSPECT, AND INSTALL PISTON COOLING ORIFICES in Group 030 in Section 2 of this manual.

Continued on next page

DPSG,RG41221,28 –19–18MAY00–1/2

Symptom	Problem	Solution
	Clogged oil pump screen or cracked pick-up tube	Remove oil pan and clean screen. Replace pick-up tube. See REMOVE, INSPECT, AND INSTALL OIL PICK-UP TUBE ASSEMBLY in Group 060 in Section 2 of this manual.
	Excessive main or connecting rod bearing clearance	Determine bearing clearance. See CYLINDER BLOCK, LINERS, PISTONS, AND RODS SPECIFICATIONS in Group 200 in Section 6 or CRANKSHAFT, MAIN BEARINGS, AND FLYWHEEL SPECIFICATIONS in Group 200 in Section 6 of this manual.

DPSG,RG41221,28 –19–18MAY00–2/2

4.5L/6.8L - L3 - Engine Oil Pressure High

Symptom	Problem	Solution
4.5L/6.8L - L3 - Engine Oil Pressure High	Improper oil classification	Drain crankcase and refill with correct oil.
	Oil pressure regulating valve bushing loose (wanders)	Remove and inspect oil pressure regulating valve. See REMOVE AND INSTALL OIL PRESSURE REGULATING VALVE in Group 060 in Section 2 of this manual.
	Improperly operating regulating valve	Remove and inspect oil pressure regulating valve. See REMOVE AND INSTALL OIL PRESSURE REGULATING VALVE in Group 060 in Section 2 of this manual.
	Plugged piston spray jet	Replace piston spray jet. See REMOVE, INSPECT, AND INSTALL PISTON COOLING ORIFICES in Group 030 in section 2 of this manual.
	Stuck or damaged bypass valve	Remove and inspect bypass valve. See REMOVE, INSPECT, AND INSTALL OIL BYPASS VALVE in Group 060 in Section 2 of this manual.
	Stuck or damaged oil filter bypass valve	**Standard oil filters:** Replace oil filter. **Optional Extended-Life oil filters:** Inspect bypass valve. Replace as required. See REMOVE AND INSTALL OIL FILTER BYPASS VALVE (EXTENDED-LIFE FILTER) in Group 060 in Section 2 of this manual.

DPSG,RG41221,39 –19–19MAY00–1/1

4.5L/6.8L - C1 - Engine Coolant Temperature Above Normal

Symptom	Problem	Solution
4.5L/6.8L - C1 - Engine Coolant Temperature Above Normal	Lack of coolant in cooling system	Fill cooling system to proper level.
	Radiator core and/or side screens dirty	Clean radiator as required.
	Engine overloaded	Reduce engine load.
	Too low crankcase oil level	Fill crankcase to proper oil level.
	Loose or defective fan belt	Replace/tighten fan belt as required.
	Premature belt wear or belt flies off pulley	Check pulley alignment. Refer to DTAC Solution No. K001230 for realignment on some OEM engines.
	Defective thermostat(s)	Test thermostat opening temperature; replace thermostats as required. See INSPECT THERMOSTAT AND TEST OPENING TEMPERATURE later in this group.
	Damaged cylinder head gasket	Replace cylinder head gasket. See CHECK FOR HEAD GASKET FAILURES later in this group.
	Defective coolant pump	Replace coolant pump. See REMOVE COOLANT PUMP in Group 070 in Section 2 of this manual.
	Defective radiator cap	Replace radiator cap as required. See PRESSURE TEST COOLING SYSTEM AND RADIATOR CAP later in this group.

DPSG,RG41221,40 –19–26NOV03–1/1

4.5L/6.8L - C2 - Engine Coolant Temperature Below Normal

Symptom	Problem	Solution
4.5L/6.8L - C2 - Engine Coolant Temperature Below Normal	Defective thermostat(s)	Test thermostats; replace thermostats as required. See INSPECT THERMOSTAT AND TEST OPENING TEMPERATURE later in this group.

DPSG,RG41221,41 –19–19MAY00–1/1

4.5L/6.8L - C3 - Coolant in Oil or Oil in Coolant

Symptom	Problem	Solution
4.5L/6.8L - C3 - Coolant in Oil or Oil in Coolant	Faulty cylinder head gasket	Look for signs of head gasket failure. See CHECK FOR HEAD GASKET FAILURES later in this group.
	Faulty oil cooler	Remove and inspect engine oil cooler. See REMOVE, INSPECT, AND INSTALL OIL COOLER in Group 060 in Section 2 of this manual.
	Leaking cylinder liner seals	Remove and inspect cylinder liners. See VISUALLY INSPECT CYLINDER LINERS in Group 030 in Section 2 of this manual.
	Cracked cylinder head or block	Locate crack; repair/replace components as required.

DPSG,RG41221,42 –19–19MAY00–1/1

Test Engine Compression Pressure

IMPORTANT: Compression pressures are affected by the cranking speed of the engine. Before beginning test, ensure that batteries are fully charged and injection nozzle area is thoroughly cleaned.

NOTE: Engines equipped with Level 4 Electronic Fuel Systems with VP44 Pump provide the ability to perform an electronic compression test. (See ENGINE TEST INSTRUCTIONS—COMPRESSION TEST in CTM170, Section 04 Group 160.

1. Start engine and run at rated speed until it warms up to normal operating temperature. (From a cold start, operate engine 10—15 minutes at slow idle.)

2. Shut off engine and procede to connections for two-valve or four-valve head engines as required.

Two-Valve Head Engines

1. Shut off fuel supply and remove fuel injection nozzles. See CTM207 (mechanical fuel systems), CTM170 (electronic fuel systems with Bosch VP44 pump), CTM331 (electronic fuel systems with Stanadyne DE10 pump) or CTM284 (electronic fuel systems with Delphi DP201 pump).

Continued on next page

RG,105,JW7652 –19–26NOV03–1/3

2. Install JT01679[1] Adapter with O-ring (or D14550BA[2] Adapter) in injection nozzle bore. Use JT02017 Holding Clamp[1] to hold JT01679 Adapter in position. Install hold-down screw in clamp and tighten screw to 37 N•m (27 lb-ft). Attach JT01682[1] Test Gauge (or D14547BA[2]) to adapter.

NOTE: If using FKM10021 Compression Test Set, install 19.58—90.578 Adapter (A) in injection nozzle bore with R73788 Nozzle Spacer (B) and two R92352 Nozzle Seals (C). Use holding plate (D) to secure. Then attach FKM10022 Test Gauge (E) to adapter.

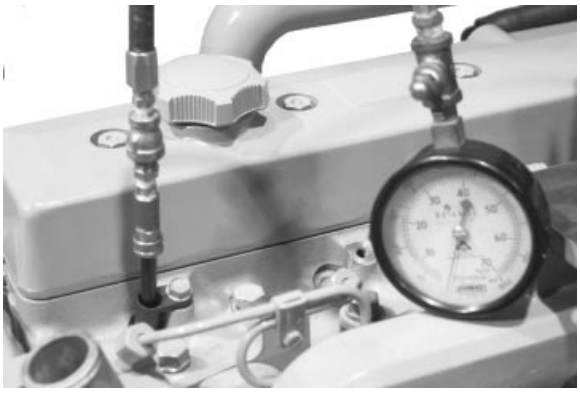

Compression Tester in Nozzle Bore (Two-Valve Head Shown)

Four-Valve Head Engines

1. Shut off fuel supply and remove glow plugs. See CTM220 (Level 11 Electronic Fuel Systems with Denso High Pressure Common Rail).

2. Install a suitable M10 x 1.0 adapter with thread sealer to cylinder head and install compression gauge to adapter. Do not tighten adapter to more than glow plug torque specification.

Specification	
Glow Plug—Torque	15 N•m (133 lb-in.)

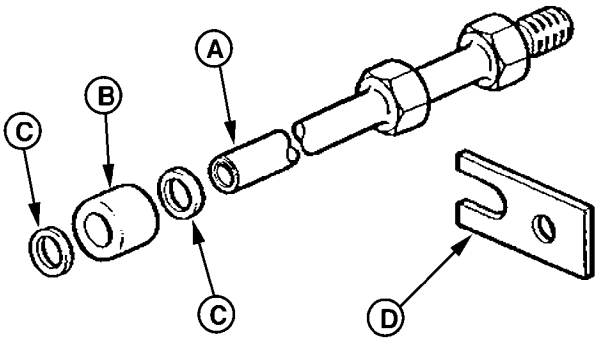

Compression Test (All Engines)

1. Push throttle lever to “STOP” position. Turn crankshaft for 10—15 seconds with starter motor (minimum cranking speed—150 rpm cold/200 rpm hot).

2. Compare readings from all cylinders. Compression pressure must be within specification.

Specification	
Engine Compression Pressure Test—Engine Compression Pressure	2379—2792 kPa (24—28 bar) (345—405 psi)
Maximum Difference between Cylinders	350 kPa (3.5 bar) (50 psi)

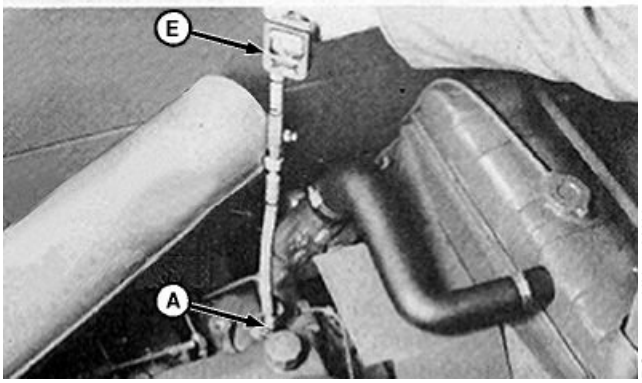

Compression Tester Adapters (Two-Valve Head Shown)

A—19.58—90.578 Adapter
B—R73788 Nozzle Spacer
C—R92352 Nozzle Seal
D—Holding Plate
E—FKM10022 Test Gauge

[1] Part of JT01674 Compression Test Set

[2] Part of D14546BA Compression Test Set

Continued on next page

RG,105,JW7652 –19–26NOV03–2/3

NOTE: Pressure given was taken at 183 m (600 ft) above sea level. A 3.6 percent reduction in gauge pressure will result for each additional 300 m (1000 ft) rise in altitude.

All cylinders within an engine should have approximately the same pressure. There should be less than 340 kPa (3.4 bar) (50 psi) difference between cylinders.

3. If pressure is much lower than shown, remove gauge and apply oil to ring area of piston through injection nozzle or glow plug bore. Do not use too much oil. Do not get oil on the valves.

4. Test compression pressure again.

   If pressure is high, worn or stuck rings are indicated, replace piston rings or install new piston and liner set as needed. (See Section 02, Group 030.)

   If pressure is low, valves could be worn or sticking. Recondition cylinder head as required. (See Section 02, Group 020.)

5. Measure compression pressure in all remaining cylinders and compare readings. Recondition cylinders and valves as required.

RG,105,JW7652 –19–26NOV03–3/3

Test Engine Cranking Speed

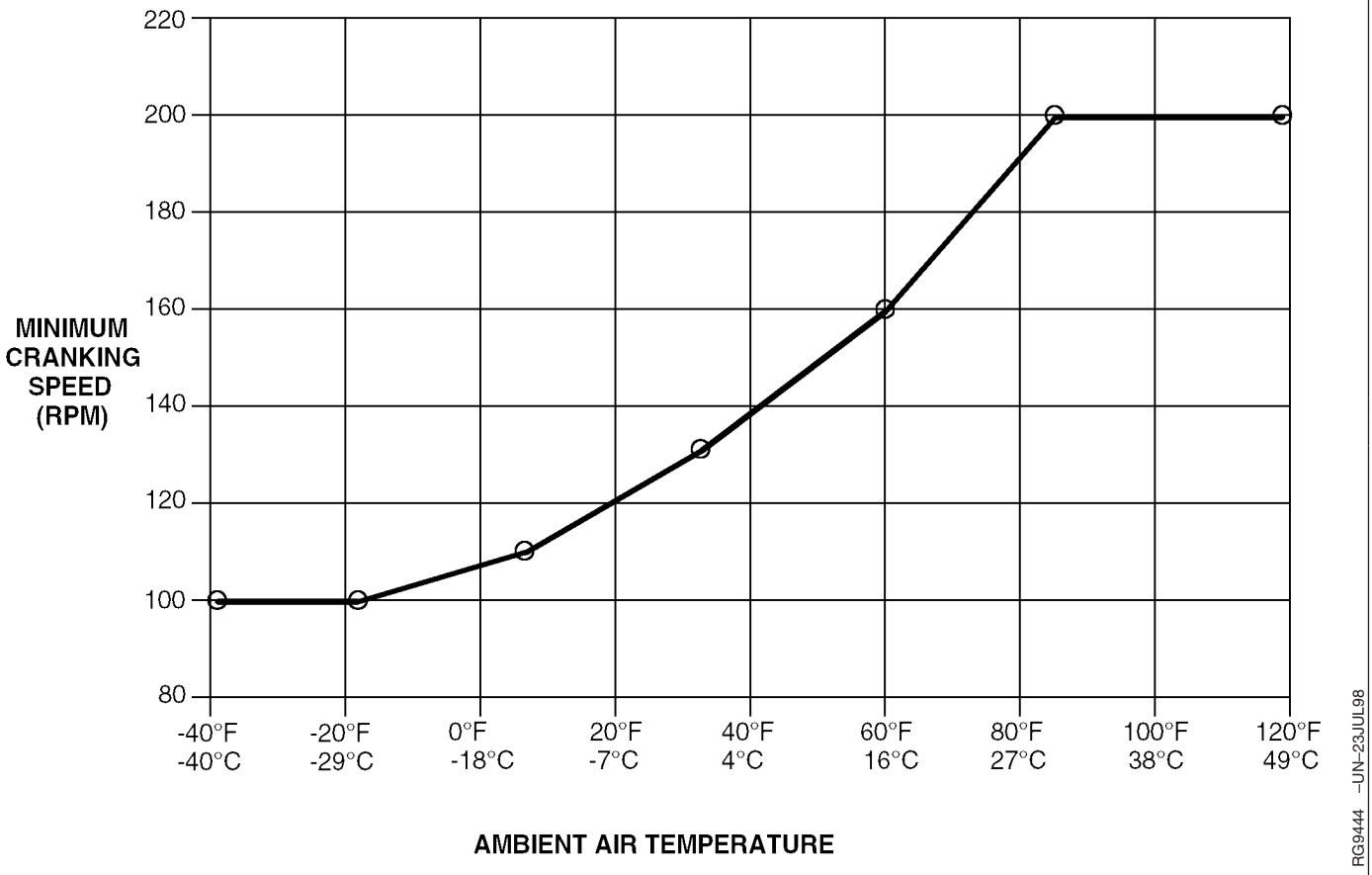

Engine Cranking Speed Test

IMPORTANT: Cranking speed specifications above are for OEM engines only. See Machine Technical Manual for other applications.

Make sure that batteries are fully charged before performing this test.

1. Disable the fuel supply system at the injection pump so fuel delivery is in the OFF position.
2. If not using the machine tachometer, install a photo tach or TIME TRAC®.
3. Crank the engine for 15 seconds and record engine speed.
4. Compare recorded engine speed to chart above.

   Cranking speed should meet or exceed specified engine rpm for a given ambient air temperature. For example, at 29°C (85°F) ambient air temperature, cranking speed should be at least 200 rpm.

   If cranking speed is below specifications, check the following:

   - Starting system problems (low battery, loose or defective wiring, defective starter, etc.).
   - Excessive engine loads (hydraulic pumps/thick oil, thick engine oil, etc.).

TIME TRAC is a registered trademark of Stanadyne Automotive Corp.

DPSG,OUO1004,164 –19–26APR00–1/1

Dynamometer Test

IMPORTANT: Dynamometers should be periodically checked for accuracy and calibrated as necessary.

NOTE: High elevations may affect engine performance. (See EFFECTS OF ALTITUDE AND TEMPERATURE ON ENGINE PERFORMANCE, in Section 06, Group 210.)

1. Connect engine to dynamometer using manufacturer's instructions.
2. Operate engine at one-half load until coolant and crankcase oil temperatures are up to normal operating range.
3. Run engine at fast idle.
4. Gradually increase load on engine until speed is reduced to rated speed rpm.

NOTE: Refer to appropriate machine technical manual for average power ratings of specific applications. Allow ±5% for minimum and maximum power.

5. Read horsepower on dynamometer and record reading over a period of several minutes after engine stabilizes.
6. Compare readings taken with power rating level for your engine application, as listed in Section 06, Group 210.

RG,100,JW7644 –19–12NOV99–1/1

Engine Oil Consumption

All engines consume some oil. The consumption rate depends on loading, design of key parts and engine condition. Since fuel consumption is an indicator of operating power levels, fuel used versus oil consumed is a critical factor in analyzing oil consumption. Oil consumption should be measured over a 100-hour period.

Long-term oil consumption (three oil drain intervals after the engine is broken in) with consumption rates poorer than 400:1 (100 gallons of fuel and 1 quart of oil) indicates a need to monitor/investigate. Suggested steps would be:

- Check for signs of ingested dust or perform an OILSCAN® test to check for silicon.
- Check for proper crankcase oil fill level.
- Perform compression test to find low compression cylinders.
- Remove head and inspect for glazed or worn liners.
- Inspect pistons for carbon deposits in the ring land grooves.
- Measure valve stem OD and valve guide ID to determine clearance.

NOTE: Ring gap alignment does not identify the leak source.

Intake valves do not have valve stem seals, and some oil deposits on the valve stem tulip are normal.

When changing to a premium oil such as TORQ-GARD SUPREME® PLUS-50®, little oil consumption change is expected, although a small percentage of engines may experience a noticeable change in consumption rates. This may be due to the following:

- The previous oil may have left deposits on internal components. Use of PLUS-50® oil will cause different chemical reactions in those deposits. The time required for the engine to regain the previous oil consumption rate will vary from one to three normal drain intervals.
- TORQ-GARD SUPREME® PLUS-50® contains a high-performance anti-oxidant along with other additives resulting in the oil remaining in the specified viscosity grade throughout the recommended drain interval. API oil grades CD, CE, and CF-4 universal engine oils do not provide this oxidation resistance which results in more rapid thickening. Increased oil viscosity can reduce oil consumption.

OILSCAN is a trademark of Deere & Company
TORQ-GARD SUPREME is a registered trademark of Deere & Company
PLUS-50 is a registered trademark of Deere & Company

DPSG,OUO1004,114 –19–23MAY00–1/1

Check Engine Oil Pressure

1. Remove main oil gallery plug (A) using JDG782A Oil Gallery Plug Tool.

A—Oil Gallery Plug

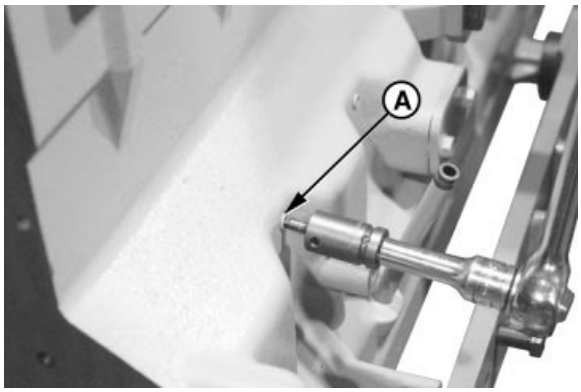

Main Oil Gallery Plug Removal Tool

04
150
17

Continued on next page

RG,105,JW7651 –19–21NOV97–1/2

2. Attach pressure gauge (B) from JT05470 Universal Pressure Test Kit to oil gallery.

IMPORTANT: To achieve an accurate oil pressure reading, warm up engine crankcase oil to 105°C (220°F) or high oil pressure readings will occur.

3. Start engine and run at speeds given below.

4. Measure oil pressure and compare readings.

Specification	
Minimum Oil Pressure—No Load at Slow Idle and 93°C (200°F) Oil Temperature—Minimum Pressure	105 kPa (1.05 bar) (15 psi)
Minimum Oil Pressure—Full Load at Rated Speed and 105°C (220°F) Oil Temperature—Minimum Pressure	275 kPa (2.75 bar) (40 psi)

NOTE: Tolerance extremes and gauge fluctuations can result in the gauge reading up to 586 kPa (5.86 bar) 85 psi. This is not detrimental to the engine.

The oil pressure regulating valve is designed so that adjustment of oil pressure should not be required.

5. Replace oil pressure regulating valve if oil pressure is not within specified range.

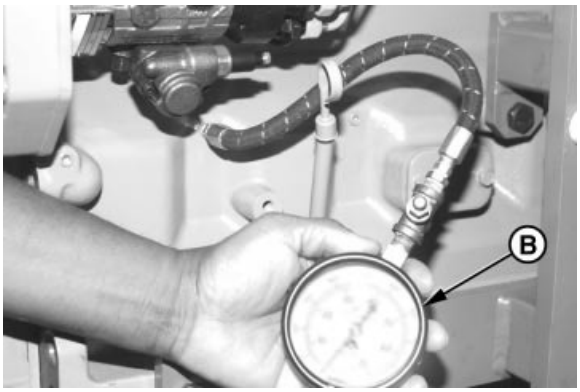

Pressure Gauge to Oil Gallery Port

B—Pressure Gauge

04 150 18

RG,105,JW7651 –19–21NOV97–2/2

Check for Excessive Engine Crankcase Pressure (Blow-By)

Excessive blow-by coming out of the crankcase breather tube (A) indicates that either the turbocharger (if equipped) seals are faulty or the piston rings and cylinder liners are not adequately sealing off the combustion chamber. This is a comparative check that requires some experience to determine when blow-by is excessive.

Run engine at high idle and check crankcase breather tube. Look for significant fumes and/or dripping oil coming out of the breather tube at fast idle, with no load.

If excessive blow-by is observed, perform the following to determine if the turbocharger (if equipped) is causing the blow-by:

1. Remove the turbocharger oil drain line where it connects to the engine block and run line into a bucket.

2. Run engine at high idle, slightly loaded, and determine if boost pressure is forcing oil through the drain line. Check crankcase breather tube to determine if blow-by has decreased.

3. If it appears that boost pressure is forcing oil through the drain line, and/or blow-by decreases with the drain line disconnected from block, replace the turbocharger, and retest.

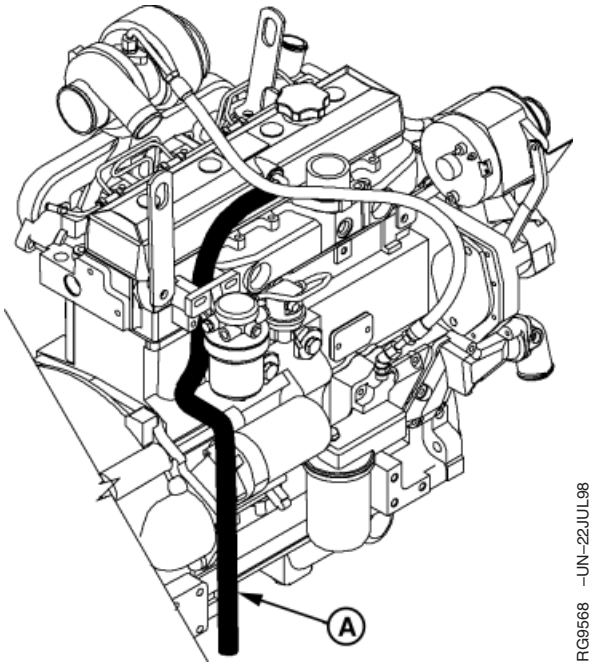

Blow-By Check

A—Breather Tube

RG,105,JW7650 –19–21NOV97–1/1

Check for Turbocharger Oil Seal Leak

Seals are used on both sides of the turbocharger rotor assembly. The seals are used to prevent exhaust gasses and air from entering the turbocharger housing. Oil leakage past the seals is uncommon but can occur.

A restricted or damaged turbocharger oil return line can cause the housing to pressurize, causing oil to leak by the seals. Additionally, intake or exhaust restrictions can cause a vacuum between the compressor and turbocharger housing, causing oil to leak by the seals.

1. Remove exhaust pipe (shown removed) and crossover tube (A).

2. Inspect the turbine casing and crossover tube for evidence of oil leakage.

   If oil leakage is present, perform the following:

   - Inspect turbocharger oil return line (B) for kinks or damage. Replace if necessary.
   - Check the air intake filter, hoses, and crossover tube for restrictions.
   - Check the exhaust system for restrictions to include position of exhaust outlet.

3. Perform necessary repairs and repeat test.

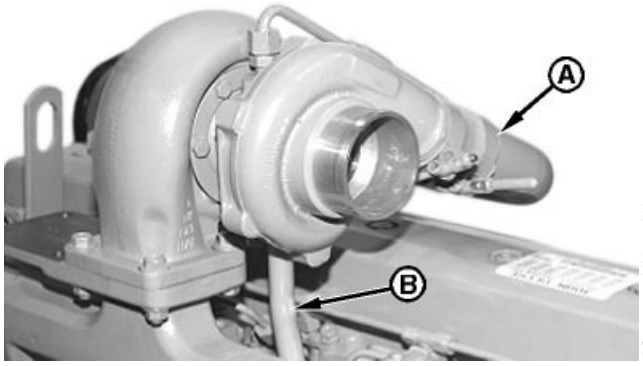

Turbocharger Oil Seal Leak Test

A—Crossover Tube
B—Oil Return Line

DPSG,OUO1004,225 –19–10JUL98–1/1

Inspect Thermostat and Test Opening Temperature

Visually inspect thermostat for corrosion or damage. Replace as necessary.

Test thermostat as follows:

CAUTION: DO NOT allow thermostat or thermometer to rest against the side or bottom of container when heating water. Either may rupture if overheated.

1. Remove thermostats. (See procedure in Section 02, Group 070.)
2. Suspend thermostat and a thermometer in a container of water.
3. Stir the water as it heats. Observe opening action of thermostat and compare temperatures with specification given in chart below.

NOTE: Due to varying tolerances of different suppliers, initial opening and full open temperatures may vary slightly from specified temperatures.

THERMOSTAT TEST SPECIFICATIONS		
Rating	**Initial Opening (Range)**	**Full Open (Nominal)**
71°C (160°F)	69—72°C (156—162°F)	84°C (182°F)
77°C (170°F)	74—78°C (166—172°F)	89°C (192°F)
82°C (180°F)	80—84°C (175—182°F)	94°C (202°F)
89°C (192°F)	86—90°C (187—194°F)	101°C (214°F)
90°C (195°F)	89—93°C (192—199°F)	103°C (218°F)
92°C (197°F)	89—93°C (193—200°F)	105°C (221°F)
96°C (205°F)	94—97°C (201—207°F)	100°C (213°F)
99°C (210°F)	96—100°C (205—212°F)	111°C (232°F)

4. Remove thermostat and observe its closing action as it cools. In ambient air the thermostat should close completely. Closing action should be smooth and slow.
5. If any thermostat is defective on a multiple thermostat engine, replace all thermostats.

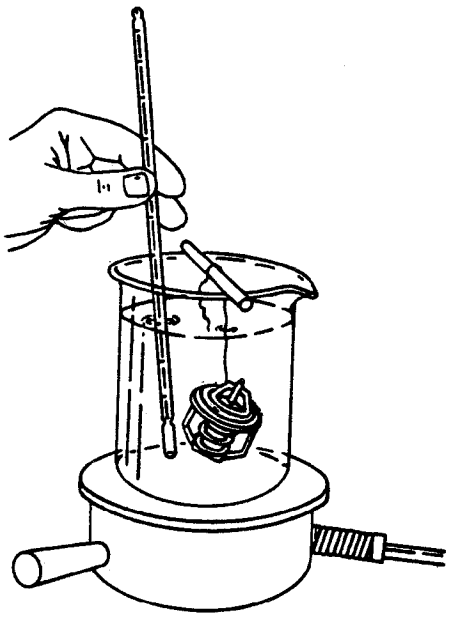

RG5971 –UN–23NOV97

Test Thermostat Opening Temperature

RG,105,JW7648 –19–21NOV97–1/1

Pressure Test Cooling System and Radiator Cap

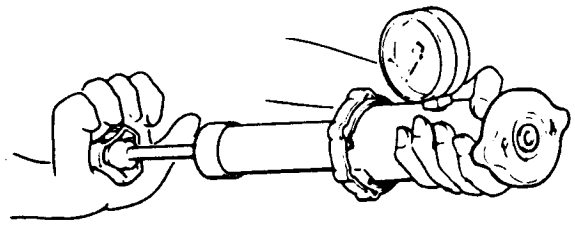

Pressure Testing Radiator Cap

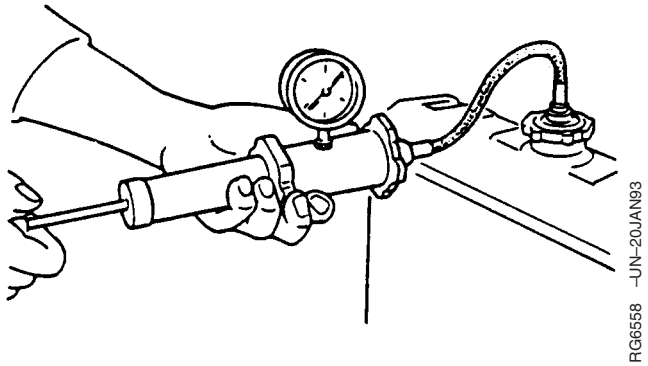

Pressure Testing Radiator

04
150
22

CAUTION: Explosive released fluids from pressurized cooling system can cause serious burns.

Shut off engine. Only remove filler cap when cool enough to touch with bare hands. Slowly loosen cap to first stop to relieve pressure before removing completely.

Test Radiator Cap:

1. Remove radiator cap and attach to D05104ST Pressure Pump as shown.
2. Pressurize cap to the following specification[1].

Specification	
Radiator Cap—Holding Pressure (10 Second Minimum Hold)	70 kPa (0.7 bar) (10 psi) Minimum

Gauge should hold pressure for 10 seconds within the normal range if cap is acceptable.

If gauge does not hold pressure, replace radiator cap.

3. Remove the cap from gauge, turn it 180°, and retest cap. This will verify that the first measurement was accurate.

Test Cooling System:

NOTE: Engine should be warmed up to test overall cooling system.

1. Allow engine to cool, then carefully remove radiator cap.
2. Fill radiator with coolant to the normal operating level.

IMPORTANT: DO NOT apply excessive pressure to cooling system. Doing so may damage radiator and hoses.

3. Connect gauge and adapter to radiator filler neck. Pressurize cooling system to specification listed for radiator cap.[1], using D05104ST Pressure Pump.
4. With pressure applied, check all cooling system hose connections, radiator, and overall engine for leaks.

   If leakage is detected, correct as necessary and pressure test system again.

   If no leakage is detected, but the gauge indicated a drop in pressure, coolant may be leaking internally within the system or at the block-to-head gasket.

[1]Test pressures recommended are for all Deere OEM cooling systems. On specific vehicle applications, test cooling system and pressure cap according to the recommended pressure for that vehicle.

RG,105,JW7649 –19–26NOV03–1/1

Pressure Test EGR Cooler for Air Leaks

NOTE: The EGR cooler can be pressure checked for leaks at a radiator shop.

1. Remove EGR cooler from engine.
2. Block off one of the coolant openings.
3. Attach shop air and regulator to the other coolant opening and submerse cooler in water.
4. Apply 248 kPa (2.5 bar) (36 psi) air pressure to cooler and watch for air bubbles indicating leaks.

   If leakage is detected, replace cooler assembly.

RG19661,0000015 –19–22JUN05–1/1

Check for Head Gasket Failures

NOTE: Booklet DB1119—CYLINDER HEAD GASKET FAILURES for 6466 and 6076 Engines can be used as a guide for diagnosing head gasket failures on POWERTECH® 4.5 L and 6.8 L Engines. However, use specifications provided in this manual (CTM104).

Head gasket failures generally fall into three categories:

- Combustion seal failures.
- Coolant seal failures.
- Oil seal failures.

04
150
24

Combustion seal failures occur when combustion gases escape between cylinder head and head gasket combustion flange, or between combustion flange and cylinder liner. Leaking combustion gases may vent to an adjacent cylinder, to a coolant or oil passage, or externally.

Coolant or oil seal failures occur when oil or coolant escapes between cylinder head and gasket body, or between cylinder block and gasket body. The oil or coolant may leak to an adjacent coolant or oil passage, or externally. Since oil and coolant passages are primarily on right-hand (camshaft) side of engine, fluid leaks are most likely to occur in that area.

Follow these diagnostic procedures when a head gasket joint failure occurs or is suspected.

1. Before starting or disassembling engine, conduct a visual inspection of machine and note any of the following:

   - Oil or coolant in head gasket seam, or on adjacent surfaces. Especially right rear corner of gasket joint.
   - Displacement of gasket from normal position.
   - Discoloration or soot from combustion gas leakage.
   - Leaking radiator, overflow tank, or hoses.
   - Leaking coolant from coolant pump weep hole.
   - Damaged or incorrect radiator, fan, or shroud.
   - Obstructed air flow or coolant flow.

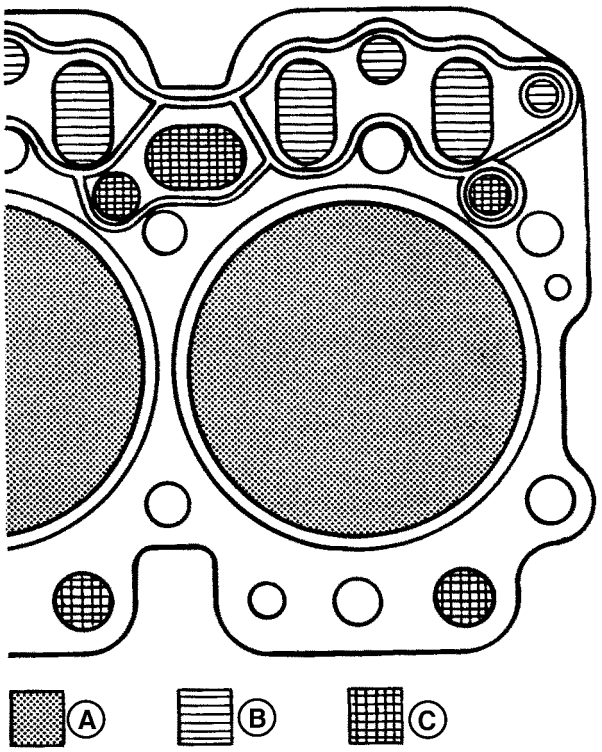

RG6432 –UN–03NOV97

Diagnosing Head Gasket Joint Failures

A—Combustion Sealing Area
B—Oil Sealing Areas
C—Coolant Sealing Areas

POWERTECH is a trademark of Deere & Company

Continued on next page

- Worn or slipping belts.
- Damaged or incorrect pressure cap.
- Presence of oil in coolant.
- Low coolant levels or Improper coolant.
- Unusually high or low oil levels.
- Oil degradation, dilution, or contamination.
- Incorrectly specified injection pump.
- Indications of fuel or timing adjustments.
- Unburned fuel or coolant in exhaust system.

2. Obtain coolant and oil samples for further analysis.

3. Start and warm up engine if it can be safely operated. Examine all potential leakage areas again as outlined previously. Using appropriate test and measurement equipment, check for the following:

   - White smoke, excessive raw fuel, or moisture in exhaust system.
   - Rough, irregular exhaust sound, or misfiring.
   - Air bubbles, gas trapped in radiator/overflow tank.
   - Loss of coolant from overflow.
   - Excessive cooling system pressure.
   - Coolant overheating.
   - Low coolant flow.
   - Loss of cab heating (air lock).

4. Shut engine down. Recheck crankcase, radiator, and overflow tank for any significant differences in fluid levels, viscosity, or appearance.

5. Compare your observations from above steps with the diagnostic charts earlier in this group. If diagnostic evaluations provide conclusive evidence of combustion gas, coolant, or oil leakage from head gasket joint, the cylinder head must be removed for inspection and repair of gasket joint components.

COMBUSTION SEAL LEAKAGE

Symptoms:

- Exhaust from head gasket crevice
- Air bubbles in radiator/overflow tank
- Coolant discharge from overflow tube
- Engine overheating
- Power loss

Continued on next page

- Engine runs rough
- White exhaust smoke
- Loss of cab heat
- Gasket section dislodged, missing (blown)
- Coolant in cylinder
- Coolant in crankcase oil
- Low coolant level

Possible Causes:

- Insufficient liner standout
- Excessive liner standout differential between cylinders
- Low head bolt clamping loads
- Rough/damaged liner flange surface
- Cracked/deformed gasket combustion flange
- Out-of-flat/damaged/rough cylinder head surface
- Missing/mislocated gasket fire ring
- Block cracked in liner support area
- Excessive fuel delivery
- Advanced injection pump timing
- Hydraulic or mechanical disturbance of combustion seal

NOTE: Cracked cylinder head or liners may also allow combustion gas leakage into coolant.

COOLANT SEAL LEAKAGE

Symptoms:

- Coolant discharge from head gasket crevice
- Coolant in crankcase oil
- Low coolant level
- High oil level
- Coolant discharge from crankcase vent

Possible Causes:

- Excessive liner standout
- Excessive liner standout differential between cylinders
- Low head bolt clamping loads
- Out-of-flat/damaged/rough block surface
- Out-of-flat/damaged/rough cylinder head surface
- Oil or coolant overheating
- Cracks/creases in gasket body surfaces
- Damage/voids in elastomer beading

OIL SEAL LEAKAGE

Continued on next page

Symptoms:

- Oil discharge from head gasket crevice
- Oil in coolant
- Low crankcase oil level
- Reduced oil to rocker arms (noisy)

Possible Causes:

- Excessive liner standout
- Excessive liner standout differential between cylinders
- Low head bolt clamping loads
- Out-of-flat/damaged/rough block surface
- Out-of-flat/damaged/rough cylinder head surface
- Oil or coolant overheating
- Cracks/creases in gasket body surfaces
- Damage/voids in elastomer beading
- Damaged/missing O-ring seal at oil port to rocker arms

NOTE: Defective oil cooler may also allow oil leakage into coolant.

RG,105,JW7657 –19–23MAY00–4/4

Check and Service Cooling System

1. Remove trash that has accumulated on or near radiator.
2. Visually inspect entire cooling system and all components for leaks or damage. Repair or replace as necessary.
3. Inspect radiator hoses for signs of leakage or rot. Replace hoses as necessary.
4. Inspect the coolant pump weep hole (A) for any restrictions.
5. Insert a heavy gauge wire deep into weep hole to make sure hole is open.

A—Weep Holes

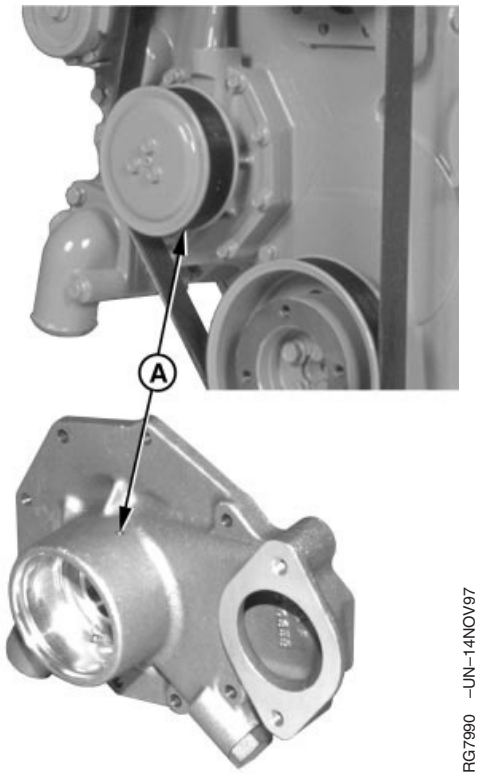

RG7990 –UN–14NOV97

Inspect Coolant Pump Weep Hole

Continued on next page

RG,100,JW7635 –19–15DEC99–1/3

CAUTION: Do not drain coolant until it has cooled below operating temperature. Always loosen block drain valve slowly to relieve any excess pressure.

6. Remove and check thermostat(s) (B). (See TEST THERMOSTATS in Section 02, Group 070.)

IMPORTANT: Whenever the aluminum timing gear cover or coolant pump are replaced, the radiator should be completely drained by opening the radiator petcock and removing the lower radiator hose.

Engines are now serviced with a coolant pump insert to decrease cavitation. When removing the coolant pump, inspect the coolant pump cavity in the timing gear cover for excessive cavitation. If engine has no coolant pump insert, install coolant pump insert. (See INSTALL COOLANT PUMP in Group 070.)

7. Drain coolant at drain valve (C) and flush cooling system. (See FLUSH AND SERVICE COOLING SYSTEM in Section 01, Group 002.)

IMPORTANT: Air must be expelled from cooling system when system is refilled. Loosen temperature sending unit fitting at rear of cylinder head or plug in thermostat housing (A) to allow air to escape when filling system. Retighten fitting or plug when all the air has been expelled.

8. Fill cooling system with recommended concentration of coolant, clean soft water, and inhibitors. (See DIESEL ENGINE COOLANT in Section 01, Group 002.)

9. Run engine until it reaches operating temperature. Check entire cooling system for leaks.

A—Thermostat Housing
B—Thermostat
C—Drain Valve



TS281 –UN–23AUG88

Cooling System Safety

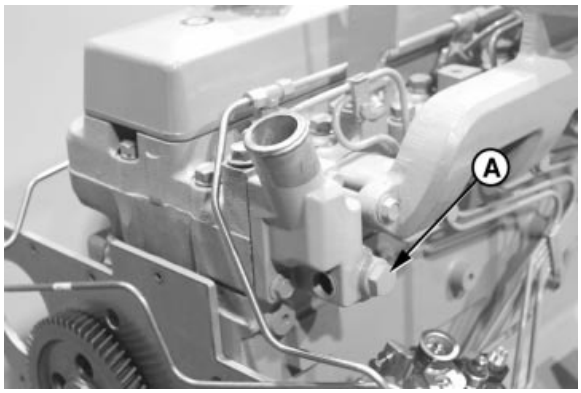

RG7615B –UN–06NOV97

Check Thermostat Housing

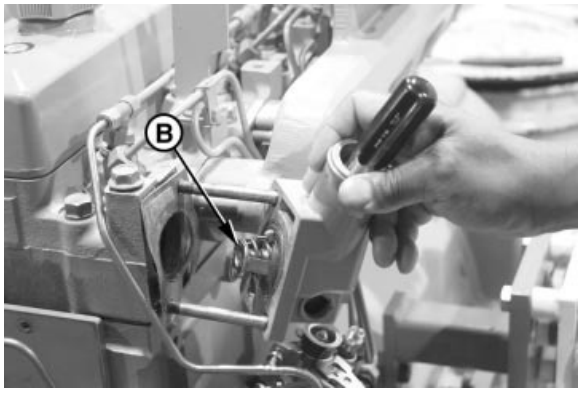

RG7614B –UN–06NOV97

Check Thermostat

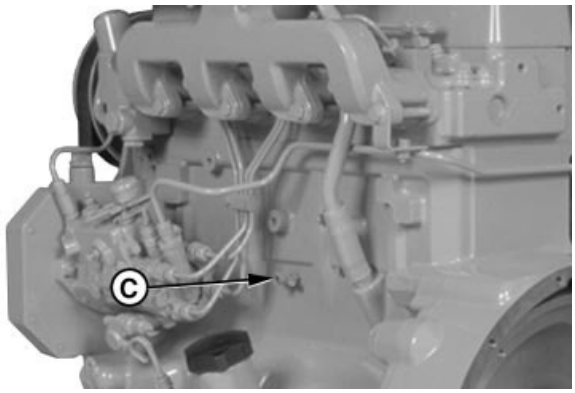

RG7991 –UN–14NOV97

Engine Block Coolant Drain Valve

Continued on next page

RG,100,JW7635 –19–15DEC99–2/3

10. After engine cools, check coolant level.

NOTE: Coolant level should be even with bottom of radiator filler neck.

11. Check system for holding pressure. (See PRESSURE TEST COOLING SYSTEM AND RADIATOR CAP in this group.)

RG,100,JW7635 –19–15DEC99–3/3

Check Air Intake System

1. Replace air cleaner primary filter element (B). Replace secondary element (A) if primary element has holes in it.

2. Check condition of air intake hose(s) (C). Replace hoses that are cracked, split, or otherwise in poor condition.

3. Check hose clamps (D) for tightness. Replace clamps that cannot be properly tightened. This will help prevent dust from entering the air intake system which could cause serious engine damage.

A—Secondary Filter Element
B—Primary Filter Element
C—Air Intake Hose(s)
D—Hose Clamps

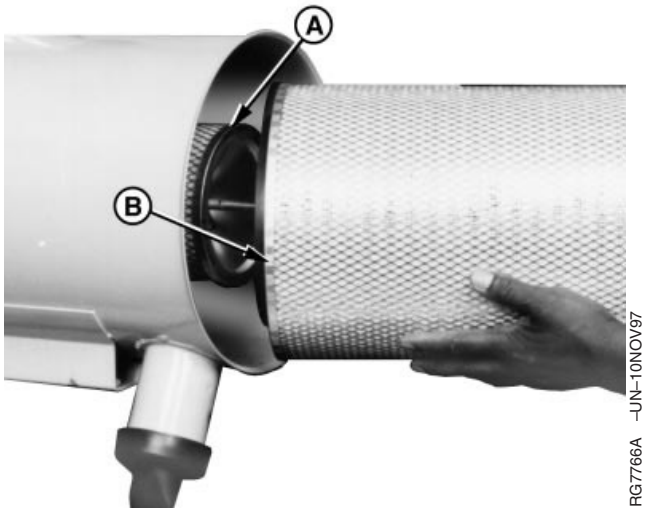

Check Air Cleaner Elements

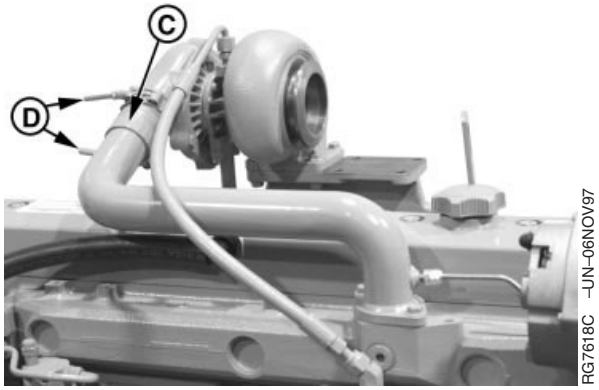

Check Turbocharger Air Intake Hoses

RG,100,JW7637 –19–21NOV97–1/1

Measure Intake Manifold Pressure (Turbocharger Boost for Tier 3/Stage IIIA Engines)

With the addition of the exhaust gas recirculator (EGR) and variable geometry turbocharger (VGT) to the 6.8L engine design, turbocharger boost values cannot be accurately predicted.

The engine controls system is targeting a given EGR percentage. Exhaust restrictions and charge air cooler temperature differential in turn affect the engines' temperature differential between the intake and exhaust manifolds. In a vehicle, if operating conditions do not match exactly conditions measured in the engine lab (intake restriction, pressure difference on charge air cooler, and exhaust restriction), then the engine will adjust the VGT to get the correct EGR percentage. Boost pressures vary depending on operating conditions of the engine. They may be higher or lower. Therefore, accurate boost pressure values cannot be predicted when the engine is in the field.

The engine has a Manifold Air Pressure Sensor that provides values to the ECU. Diagnostic procedures with Service Advisor can provide an accurate measurement of how well the engine is performing.

If boost pressure is suspected to be too low, check for the following:

- Restriction in air cleaner.
- Leak in air intake between turbocharger and cylinder head.
- Leak in exhaust manifold gasket.
- Restricted exhaust.
- Leak in fuel system piping.
- Restricted fuel filter elements.
- Incorrect injection pump timing.
- Low fuel injection pump delivery.
- Faulty fuel supply pump.
- Low cylinder compression pressure.
- Faulty fuel injection nozzles.
- Carbon build-up in turbocharger.
- Turbocharger compressor or turbine wheel rubbing housing.

RG19661,000001C –19–30JUN05–1/1

Measure Intake Manifold Pressure (Turbocharger Boost/Power Check)

NOTE: Turbocharger boost pressure can not be accurately tested on Tier 3/Stage IIIA engines with VGT

This test of turbocharger boost is also a good indicator of whether the engine is performing at full rated power.

Continued on next page

DPSG,OUO1004,134 –19–26APR00–1/3

IMPORTANT: If testing the engine with the air filter system removed, install JDG576 Turbocharger Shield to inlet of turbocharger.

NOTE: On "H" engines, pressure reading should be taken at intake manifold after the aftercooler.

1. Disconnect line (A) from intake manifold and install the appropriate fitting from JDE147 Manifold Pressure Test Kit or FKM10002 Universal Pressure Test Kit. Additional adapter fittings may be needed: M10 x 1 and M14 x 1.5.

   Connect gauge (B) and hose assembly to fitting. Be sure all connections are tight.

IMPORTANT: Engine speed and load should be stabilized before taking a gauge reading. Be sure that gauge works properly and familiarize yourself with the use of the gauge.

Turbo-boost pressure checks are only a guide to determine if there is an engine problem (valve leakage, faulty nozzles, etc.). Low pressure readings are not a conclusive reason for increasing injection pump fuel delivery. Pump adjustment should be within specifications as established by an authorized diesel repair station.

2. Before checking boost pressure, warm up engine to allow the lubricating oil to reach operating temperature.

IMPORTANT: On some vehicles, it may not be possible to meet the turbo boost pressure due to inability to get full load rated speed. In these cases, see Machine Operation and Test Manual for the appropriate test method and pressure.

3. Place engine under full load at rated speed to make test.

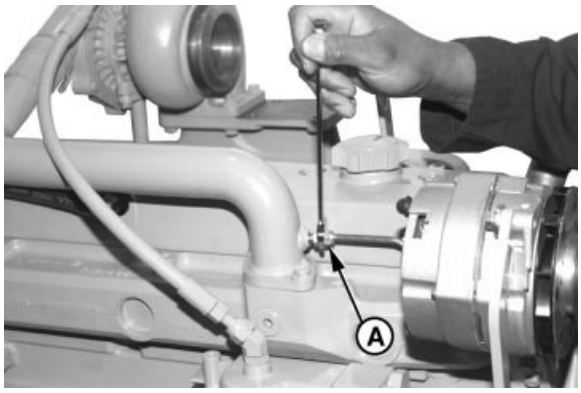

RG7776 –UN–11NOV97

Check Turbocharger Boost Pressure

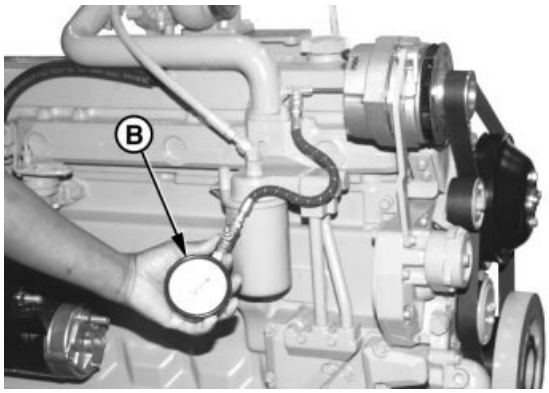

RG7777 –UN–11NOV97

Check Turbocharger Boost Pressure

A—Intake Manifold Line
B—Pressure Gauge

04
150
31

Continued on next page

4. Observe pressure reading on gauge. Compare readings with charts in Section 06, Group 210. Boost pressure should be within ranges shown in charts when engine is developing rated power at full load rated speed.

5. If boost pressure is too high, remove fuel injection pump and have it checked for high fuel delivery by an authorized diesel repair station.

   If boost pressure is too low, check the following:

   - Restricted air filter elements.
   - Restricted fuel filter elements.
   - Incorrect fast idle adjustment.
   - Incorrect injection pump timing.
   - Exhaust manifold leaks.
   - Intake manifold leaks.
   - Faulty fuel transfer pump.
   - Low compression pressure.
   - Faulty fuel injection nozzles.
   - Carbon build-up in turbocharger.
   - Turbocharger compressor or turbine wheel rubbing housing.
   - Low fuel injection pump fuel delivery.
   - Restricted exhaust.

6. After completing test, remove test equipment and fitting and reconnect line to intake manifold. Tighten securely.

DPSG,OUO1004,134 –19–26APR00–3/3

Check for Intake and Exhaust Restrictions

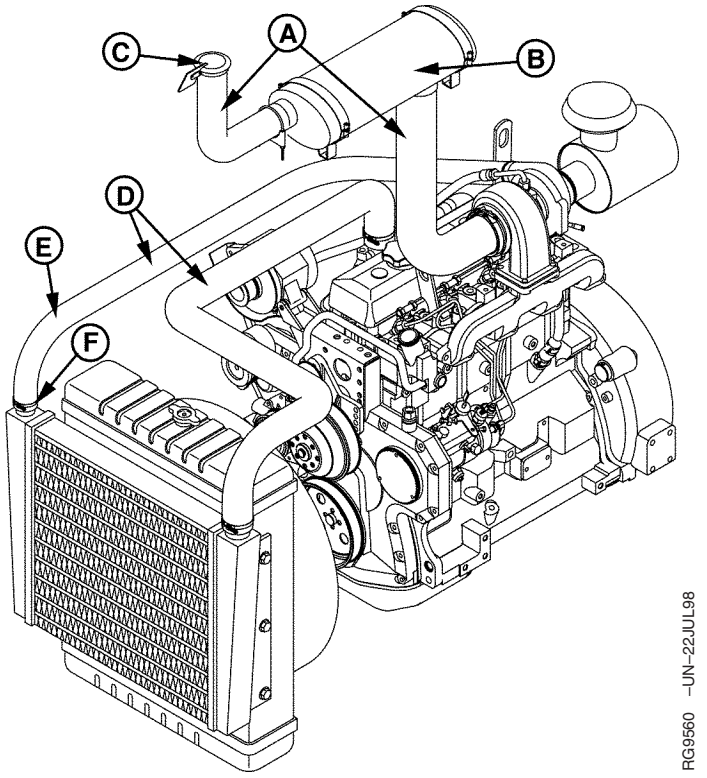

Intake/Exhaust Restriction Check—Two-Valve Head Engine Shown

A—Exhaust Piping
B—Muffler
C—Rain Cap
D—Intake Piping
E—Elbow
F—Connection

Low power, low boost pressure, and excessive black exhaust smoke can be caused by an intake air or exhaust restriction.

1. Inspect the exhaust piping (A), the muffler (B), and the rain cap (C) for damage or any possible restrictions.
2. Inspect the intake piping (D), any elbows (E), and any connections (F). Look for collapsed pipes, dented pipes and loose connections. Replace components as needed.

DPSG,OUO1004,222 –19–10JUL98–1/1

Test for Intake Air Leaks

Loose connections or cracks in the suction side of the air intake pipe can allow debris to be ingested into the engine causing rapid wear in the cylinders. Additionally, on turbocharged engines, compressor damage may occur and cause an imbalance resulting in bearing failure.

Air leaking from loose connections or cracks on the pressure side of the turbocharger can cause excessive smoke and low power.

NOTE: The following test procedure requires that the air intake be sealed off to pressurize the system. Using a plastic bag to seal the air intake filter is used as an example.

CAUTION: Do not start engine during this test procedure. Plastic bag (or whatever material/object used to seal intake) can be sucked into the engine.

1. Remove air cleaner cover and main filter element.
2. Put a plastic bag over secondary filter element and install main element and cover.
3. For two valve head engines, remove plug (B) from manifold or disconnect start aid line (A) from crossover tube (if equipped).
4. For four valve head engines, remove air temperature sensor (C) from manifold.
5. Using a adapter, connect a regulated air source.
6. Pressurize air intake system to 13.8—20.7 kPa (0.13-0.21 bar) (2—3 psi).
7. Spray soap and water solution over all connections from the air cleaner to the turbocharger or air inlet to check for leaks. Repair all leaks.
8. Remove plastic bag from filter element and reinstall element and cover.



Air Intake Leak Test

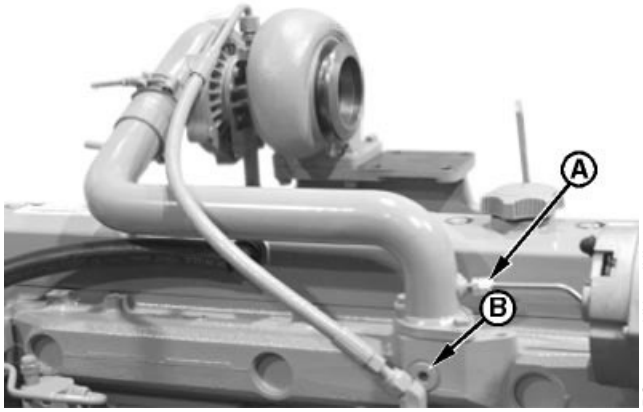

Air Intake Leak Test

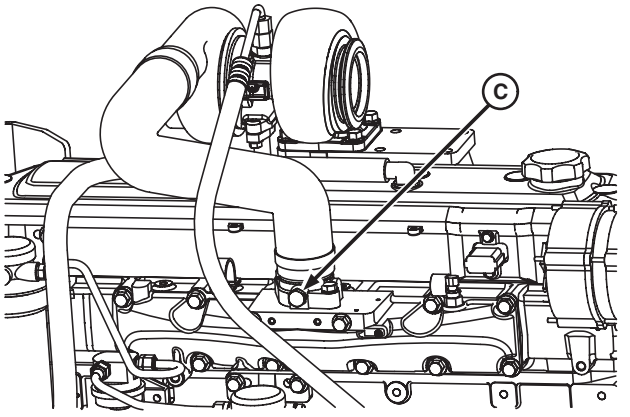

Air Intake Leak Test - Four Valve Head

A—Start Aid Line
B—Plug
C—Air Temperature Sensor

DPSG,OUO1004,220 –19–26APR00–1/1

Check for Exhaust Air Leaks (Turbocharged Engines)

Exhaust leaks, upstream of the turbocharger, will cause the turbocharger turbine to rotate at a reduced speed resulting in low boost pressure, low power, and excessive black smoke.

IMPORTANT: Avoid engine damage and failure. There are two types of gaskets: single entry and dual entry. Single entry is completely open in the center and dual entry has a divider in the center. Do not interchange dual and single entry gaskets.

Inspect the exhaust manifold gasket (A), the exhaust manifold (B), and the turbocharger gasket (C) for damage and any signs of leakage. Replace components as needed.

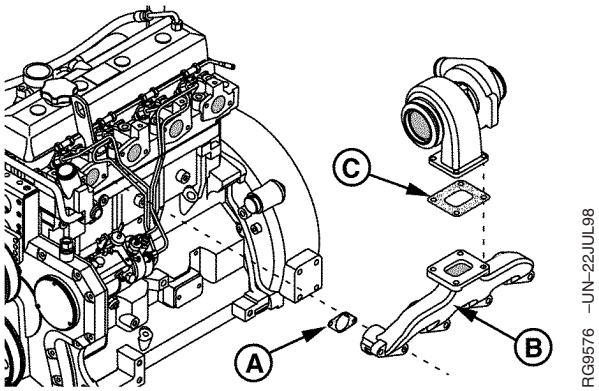

Exhaust Leak Check

A—Exhaust Manifold Gasket
B—Exhaust Manifold
C—Turbocharger Gasket[1]

[1] There are two types of gaskets: single entry and dual entry. Single entry is completely open in the center and dual entry has a divider in the center. Do not interchange dual and single entry gaskets.

DPSG,OUO1004,288 –19–23JUL98–1/1

04
150
35

Test Turbocharger Wastegate

1. Check hose to wastegate actuator for kinks or cracks. Replace if damaged.
2. Disconnect hose from wastegate actuator.
3. Connect a regulated air source to actuator fitting (A).
4. Vary pressure to wastegate actuator from 62—83 kPa (.62—.83 bar) (9—12 psi).

   Actuator rod (B) should move in and out freely as pressure is varied.

   If rod does not move freely, check wastegate adjustment. (See ADJUST TURBOCHARGER WASTEGATE ACTUATOR in Section 02, Group 080.)

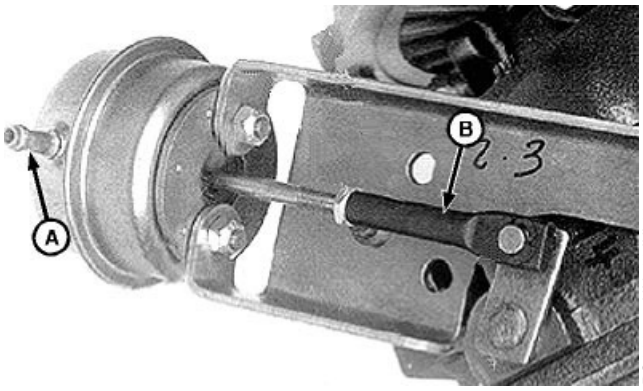

Wastegate Check

A—Actuator Fitting
B—Actuator Rod

04
150
36

DPSG,OUO1004,224 –19–10JUL98–1/1

Test Air Filter Restriction Indicator Switch

1. Remove air filter restriction indicator switch from air intake piping.
2. Install pipe nipple (C), tee fitting (B), and gauge (A) from D05022ST Water Vacuum Gauge Kit into air filter restriction indicator hole. Install air filter restriction indicator into tee fitting.
3. Start engine and slowly cover the air cleaner inlet with a piece of paper or cardboard.
4. Air restriction indicator must show red at 5.6—6.8 kPa (56—68 bar) (22.7—27.3 in. water) (1.6—2.0 in. hg) vacuum.

   If air restriction indicator shows red at any other value than listed above, install a new indicator.

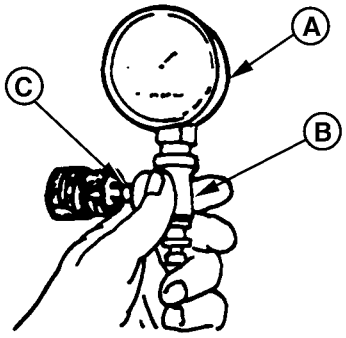

Test Air Filter Restriction Indicator

A—Gauge
B—Tee Fitting
C—Pipe Nipple

RG,110,JW7671 –19–24NOV97–1/1

Section 05
Tools and Other Materials

Contents

Page

Group 170—Repair Tools and Other Materials
Engine Rebuild Essential Tools 05-170-1
Engine Rebuild Service Equipment and Tools 05-170-2
Engine Rebuild Other Materials. 05-170-3
Cylinder Head and Valves Essential Tools (Two-Valve Head) 05-170-3
Cylinder Head and Valves Service Equipment and Tools (Two-Valve Head) . . .05-170-9
Other Material (Two-Valve Head) 05-170-11
Cylinder Head and Valves Essential Tools (Four-Valve Head) 05-170-12
Service Equipment and Tools (Four-Valve Head) 05-170-18
Other Material (Four-Valve Head) 05-170-20
Cylinder Block, Liners, Pistons and Rods Essential Tools 05-170-20
Cylinder Block, Liners, Pistons and Rods Service Equipment and Tools 05-170-25
Cylinder Block, Liners, Pistons and Rods Other Materials 05-170-26
Crankshaft, Main Bearings and Flywheel Essential Tools 05-170-27
Crankshaft, Main Bearings and Flywheel Service Equipment and Tools 05-170-33
Crankshaft, Main Bearings and Flywheel Other Materials 05-170-34
Camshaft, Balancer Shafts and Timing Gear Train Essential Tools 05-170-35
Camshaft, Balancer Shafts and Timing Gear Train Service Equipment and Tools 05-170-40
Camshaft, Balancer Shafts and Timing Gear Train Other Materials 05-170-42
Lubrication System Essential Tools. 05-170-43
Lubrication System Service Equipment and Tools. 05-170-47
Lubrication System Other Materials. 05-170-49
Cooling System Essential Tools 05-170-50
Cooling System Service Equipment and Tools 05-170-52
Cooling System Other Materials 05-170-53
Air Intake and Exhaust System Other Materials 05-170-54
Starting and Charging System Essential Tools 05-170-55

Page

Group 180—Diagnostic Service Tools
Diagnostic Essential Tools 05-180-1
Diagnostic Service Equipment and Tools 05-180-3

Group 190—Dealer Fabricated Service Tools
How to Make Tools 05-190-1
DFRG3—Cylinder Liner Holding Fixture 05-190-1
DFRG5—Injection Pump Front Plate Timing Mark Transfer Tool. 05-190-2
Engine Oil Dipstick Tube Driver (6010—6910 Series Tractor Engines) 05-190-3

Engine Rebuild Essential Tools

NOTE: Order tools according to information given in the U.S. SERVICEGARD™ Catalog or from the European Microfiche Tool Catalog (MTC).

Some of the SERVICEGARD™ tools listed in this manual may no longer be available for purchase. If you do not have the referenced tool, a suitable substitute may be available from a local supplier.

SERVICEGARD is a trademark of Deere & Company

OUO1082,0000233 –19–30OCT01–1/2

Engine Lifting Sling JDG23

Used to lift engine or remove cylinder head.

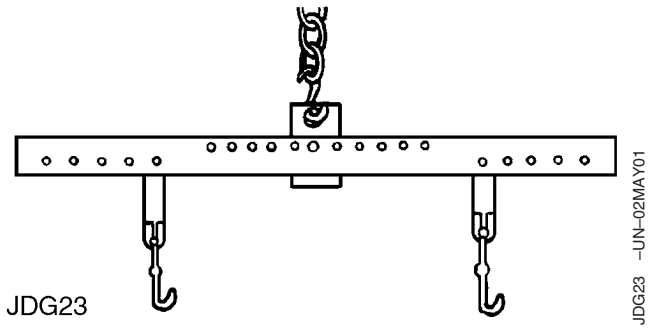

OUO1082,0000233 –19–30OCT01–2/2

Engine Rebuild Service Equipment and Tools

NOTE: Order tools according to information given in the U.S. SERVICEGARD™ Catalog or from the European Microfiche Tool Catalog (MTC). Some tools may be available from a local supplier.

Some of the SERVICEGARD™ tools listed in this manual may no longer be available for purchase. If you do not have the referenced tool, a suitable substitute may be available from a local supplier.

SERVICEGARD is a trademark of Deere & Company

OUO1082,0000234 –19–30OCT01–1/4

05
170
2

Engine Repair Stand D05223ST

Used with D05226ST Special Adapter and 62835 Engine Adapter to mount engine.

OUO1082,0000234 –19–30OCT01–2/4

Special Adapter D05226ST

Used to mount 62835 Engine Adapter to D05223ST Engine Repair Stand.

OUO1082,0000234 –19–30OCT01–3/4

Engine Adapter. 62835

Used with D05226ST Special Adapter and D05223ST Engine Repair Stand to mount engine. Part of JT07268 Engine Repair Stand Adapter Kit.

OUO1082,0000234 –19–30OCT01–4/4

Engine Rebuild Other Materials

Number	Name	Use
TY9370 (Canadian) 242 (LOCTITE®)	Thread Lock and Sealer (Medium Strength)	Apply to cap screws for engine lifting straps.

LOCTITE is a trademark of Loctite Corp.

OUO1082,0000235 –19–30OCT01–1/1

Cylinder Head and Valves Essential Tools (Two-Valve Head)

NOTE: Order tools according to information given in the U.S. SERVICEGARD™ Catalog or from the European Microfiche Tool Catalog (MTC).

Some of the SERVICEGARD™ tools listed in this manual may no longer be available for purchase. If you do not have the referenced tool, a suitable substitute may be available from a local supplier.

SERVICEGARD is a trademark of Deere & Company

DPSG,OUO1004,2707 –19–07NOV03–1/17

Flywheel Turning Tool JDE83

Used to rotate flywheel on engines with 142-tooth flywheel ring gear and a 26.5 mm (1.04 in.) ID flywheel housing guide bore diameter.

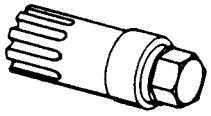

RG6251 –UN–22JUL92

JDE83

Continued on next page

DPSG,OUO1004,2707 –19–07NOV03–2/17

RG7056 –UN–17JUN05

Flywheel Turning Tool JDE81-1

Used to rotate flywheel on engines with 129-tooth flywheel ring gear and a 29.9 mm (1.18 in.) flywheel housing guide bore diameter. JDG820 (formerly JDE81-1) may be used if JDE81-1 is not available. JDG820 (formerly JDE81-1) Flywheel Turning Tool, MUST be used for 6.8L engines in 7400 and 7600 Tractors.

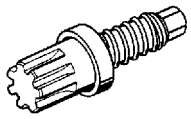

JDE81-1

DPSG,OUO1004,2707 –19–07NOV03–3/17

RG7056 –UN–17JUN05

Flywheel Turning Tool . . . . . JDG820 (formerly JDE81-1)

Used to rotate flywheel on 6.8L engines in 7400 and 7600 Tractors.

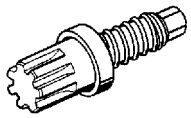

JDG820 (formerly JDE81-1)

DPSG,OUO1004,2707 –19–07NOV03–4/17

RG5068 –UN–05DEC97

Timing Pin JDE81-4

Used to lock flywheel at No. 1 TDC for injection pump timing. Do not use to lock engine when removing or installing damper retaining cap screws.

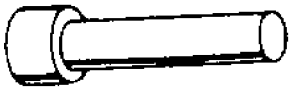

RG5068

JDE81-4

Continued on next page

DPSG,OUO1004,2707 –19–07NOV03–5/17

Timing Pin JDG1571

Used to lock flywheel at No. 1 TDC for injection pump timing. This timing pin MUST be used on engine applications using the tapered-nose crankshaft due to the higher torque specification for damper retaining cap screw.

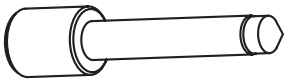

RG12031 –UN–20DEC01

JDG1571

DPSG,OUO1004,2707 –19–07NOV03–6/17

Engine Lifting Sling JDG23

Used to lift engine or remove cylinder head.

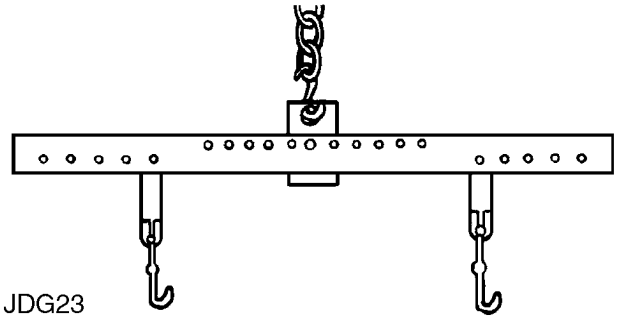

JDG23 –UN–02MAY01

DPSG,OUO1004,2707 –19–07NOV03–7/17

RG6246 –UN–05DEC97

Dial Indicator . . . . . D17526CI (English, in.) or D17527CI (Metric, mm)

Use with JDG451 Height Gauge or magnetic base to measure valve recess in cylinder head.



RG6246

D17526CI/D17527CI

Continued on next page

DPSG,OUO1004,2707 –19–07NOV03–8/17

RG7029 –UN–05DEC97

Height Gauge JDG451

Used with a dial indicator to measure valve recess in cylinder head. Also used to measure piston and liner height.

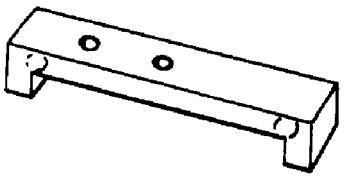

RG7029

JDG451

DPSG,OUO1004,2707 –19–07NOV03–9/17

RG5070 –UN–23AUG88

Valve Spring Compressor JDE138

Used to compress valve springs when removing and installing valves.

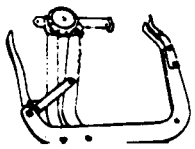

JDE138

05
170
6

DPSG,OUO1004,2707 –19–07NOV03–10/17

RG5061 –UN–05DEC97

Spring Compression Tester D01168AA

Test valve spring compression.

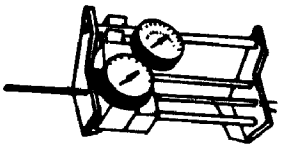

RG5061

D01168AA

DPSG,OUO1004,2707 –19–07NOV03–11/17

RG5084 –UN–23AUG88

Nozzle Bore Cleaning Tool JDE39

Clean injection nozzle bores in cylinder head.



JDE39

Continued on next page

DPSG,OUO1004,2707 –19–07NOV03–12/17

RG5064 –UN–05DEC97

Valve Guide Knurler Kit JT05949

Knurl valve guides.

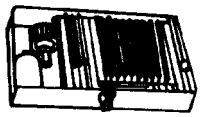

RG5064

JT05949

DPSG,OUO1004,2707 –19–07NOV03–13/17

RG5065 –UN–05DEC97

Valve Seat Driver JDG676

Use with JDG675 Adapter to install intake and exhaust valve seat inserts in cylinder head.



RG5065

JDG676

05
170
7

DPSG,OUO1004,2707 –19–07NOV03–14/17

Valve Seat Insert Installing Adapter. JDG675

Use with JDG676 Valve Seat Driver to install intake and exhaust valve seat inserts.

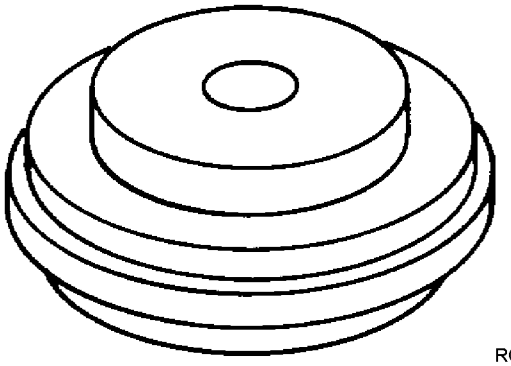

RG5240 –UN–05DEC97

RG5240

JDG675

Continued on next page

DPSG,OUO1004,2707 –19–07NOV03–15/17

RG5612 –UN–12APR90

Valve Stem Seal Installer JDG678

Use to install valve stem seals.



JDG678

DPSG,OUO1004,2707 –19–07NOV03–16/17

RG5100 –UN–05DEC97

Tap JDG680

Used to restore threaded holes in cylinder block for cylinder head cap screws.

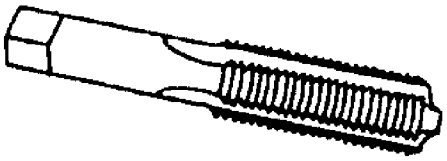

JDG680

05
170
8

DPSG,OUO1004,2707 –19–07NOV03–17/17

Cylinder Head and Valves Service Equipment and Tools (Two-Valve Head)

NOTE: Order tools according to information given in the U.S. SERVICEGARD™ Catalog or from the European Microfiche Tool Catalog (MTC). Some tools may be available from a local supplier.

Some of the SERVICEGARD™ tools listed in this manual may no longer be available for purchase. If you do not have the referenced tool, a suitable substitute may be available from a local supplier.

SERVICEGARD is a trademark of Deere & Company

DPSG,OUO1004,2708 –19–26APR00–1/9

05
170
9

Crankshaft Front/Rear Rotation Adapter. JDG966

Rotate straight nose crankshaft from front and rear with flywheel removed.

DPSG,OUO1004,2708 –19–26APR00–2/9

Valve Inspection Center

Check valves for out-of-round.

DPSG,OUO1004,2708 –19–26APR00–3/9

Precision “Bevelled Edge” Straightedge D05012ST

Check cylinder head flatness.

DPSG,OUO1004,2708 –19–26APR00–4/9

Plastic Brush

Clean valve guides.

DPSG,OUO1004,2708 –19–26APR00–5/9

End Brush D17024BR

Remove carbon on valve seats.

Continued on next page

DPSG,OUO1004,2708 –19–26APR00–6/9

Heavy-Duty Seat Grinder JT05893

Grind valve seats.

DPSG,OUO1004,2708 –19–26APR00–7/9

Eccentrimeter

Measure valve seat runout.

DPSG,OUO1004,2708 –19–26APR00–8/9

Torque Angle Gauge JT05993

Used to TORQUE-TURN flanged-head cylinder head and connecting rod cap screws.

DPSG,OUO1004,2708 –19–26APR00–9/9

Other Material (Two-Valve Head)

Number	Name	Use
JDT305 (U.S.)	Lubricant	Lubricate head bolt before installation.

OUO1082,000029C –19–23JAN04–1/1

Cylinder Head and Valves Essential Tools (Four-Valve Head)

NOTE: Order tools according to information given in the U.S. SERVICEGARD™ Catalog or from the European Microfiche Tool Catalog (MTC).

Some of the SERVICEGARD™ tools listed in this manual may no longer be available for purchase. If you do not have the referenced tool, a suitable substitute may be available from a local supplier.

SERVICEGARD is a trademark of Deere & Company

OUO1082,00002AC –19–01JUL04–1/18

05
170
12

Flywheel Turning Tool JDE83

Used to rotate flywheel on engines with 142-tooth flywheel ring gear and a 26.5 mm (1.04 in.) ID flywheel housing guide bore diameter.

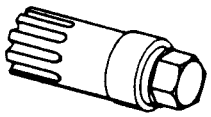

RG6251 –UN–22JUL92

JDE83

OUO1082,00002AC –19–01JUL04–2/18

RG7056 –UN–17JUN05

Flywheel Turning Tool JDE81-1

Used to rotate flywheel on engines with 129-tooth flywheel ring gear and a 29.9 mm (1.18 in.) flywheel housing guide bore diameter. JDG820 (formerly JDE81-1) may be used if JDE81-1 is not available. JDG820 (formerly JDE81-1) Flywheel Turning Tool, MUST be used for 6.8L engines in 7400 and 7600 Tractors.

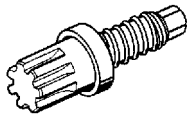

JDE81-1

Continued on next page

OUO1082,00002AC –19–01JUL04–3/18

RG7056 –UN–17JUN05

Flywheel Turning Tool . . . . . JDG820 (formerly JDE81-1)

Used to rotate flywheel on 6.8L engines in 7400 and 7600 Tractors.

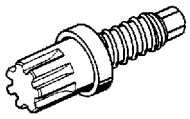

JDG820 (formerly JDE81-1)

OUO1082,00002AC –19–01JUL04–4/18

RG5068 –UN–05DEC97

Timing Pin JDE81-4

Used to lock flywheel at No. 1 TDC for injection pump timing. Do not use to lock engine when removing or installing damper retaining cap screws.

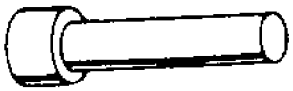

RG5068

JDE81-4

05
170
13

OUO1082,00002AC –19–01JUL04–5/18

Timing Pin JDG1571

Used to lock flywheel at No. 1 TDC for injection pump timing. This timing pin MUST be used on engine applications using the tapered-nose crankshaft due to the higher torque specification for damper retaining cap screw.

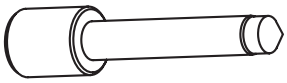

RG12031 –UN–20DEC01

JDG1571

Continued on next page

OUO1082,00002AC –19–01JUL04–6/18

Fuel Injector Nozzle Removal Tool JDG1652

Removes fuel injectors from four-valve head.



RG12410 –UN–19JUN02

JDG1652

OUO1082,00002AC –19–01JUL04–7/18

05
170
14

Engine Lifting Sling JDG23

Used to lift engine or remove cylinder head.

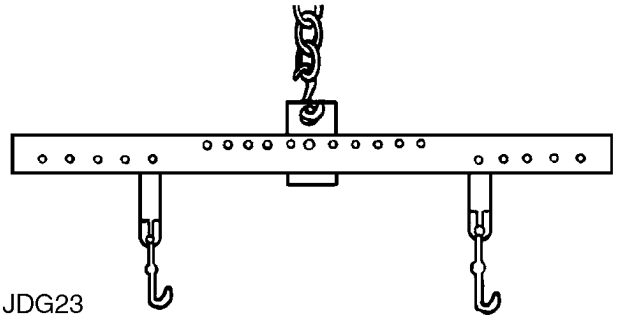

JDG23 –UN–02MAY01

OUO1082,00002AC –19–01JUL04–8/18

Injector Sleeve Installer JDG1649

Install fuel injector sleeves into four-valve cylinder head.

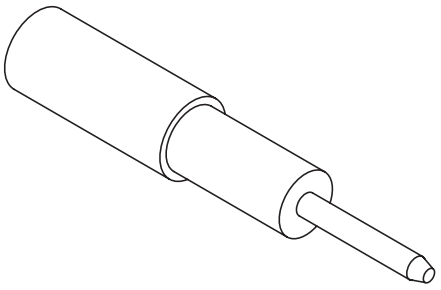

RG12411 –UN–19JUN02

JDG1649

Continued on next page

OUO1082,00002AC –19–01JUL04–9/18

RG6246 –UN–05DEC97

Dial Indicator . . . . . D17526CI (English, in.) or D17527CI (Metric, mm)

Use with JDG451 Height Gauge or magnetic base to measure valve recess in cylinder head.



RG6246

D17526CI/D17527CI

OUO1082,00002AC –19–01JUL04–10/18

RG7029 –UN–05DEC97

Height Gauge. JDG451

Used with a dial indicator to measure valve recess in cylinder head.

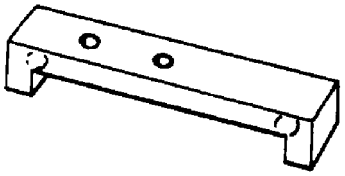

RG7029

JDG451

05
170
15

OUO1082,00002AC –19–01JUL04–11/18

RG5070 –UN–23AUG88

Valve Spring Compressor JDE138

Used to compress valve springs when removing and installing valves.

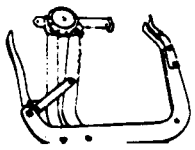

JDE138

OUO1082,00002AC –19–01JUL04–12/18

RG5061 –UN–05DEC97

Spring Compression Tester D01168AA

Test valve spring compression.

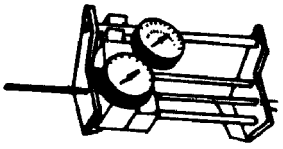

RG5061

D01168AA

Continued on next page

OUO1082,00002AC –19–01JUL04–13/18

RG5064 –UN–05DEC97

Valve Guide Knurler Kit JT05949

Knurl valve guides.

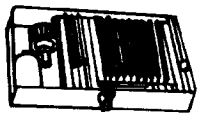

RG5064

JT05949

OUO1082,00002AC –19–01JUL04–14/18

Valve Seat Driver JDG1653-1

Use with JDG1653-2 Adapter to install intake and exhaust valve seat inserts in cylinder head. Part of JDG1653 Valve Seat Installation Kit.

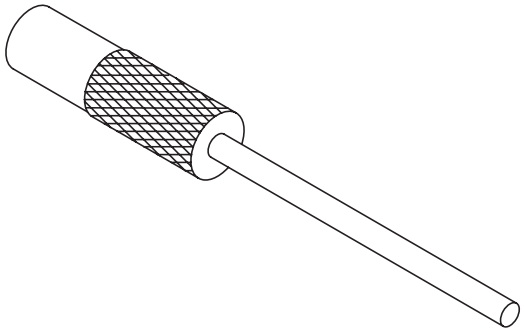

RG12408 –UN–19JUN02

JDG1653-1

05
170
16

OUO1082,00002AC –19–01JUL04–15/18

Valve Seat Insert Installing Adapter. JDG1653-2

Use with JDG1653-1 Valve Seat Driver to install intake and exhaust valve seat inserts. Part of JDG1653 Valve Seat Installation Kit.

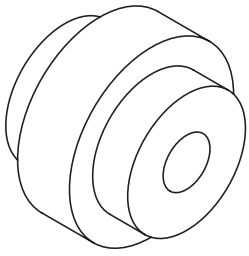

RG12409 –UN–19JUN02

JDG1653-2

Continued on next page

OUO1082,00002AC –19–01JUL04–16/18

Valve Stem Seal Installer JDG1651

Use to install valve stem seals.

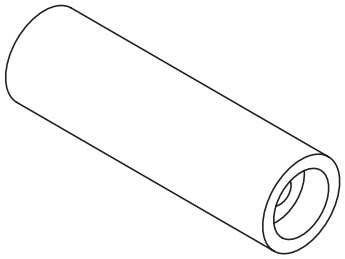

RG12407 –UN–19JUN02

JDG1651

OUO1082,00002AC –19–01JUL04–17/18

RG5100 –UN–05DEC97

Tap JDG680

Used to restore threaded holes in cylinder block for cylinder head cap screws.

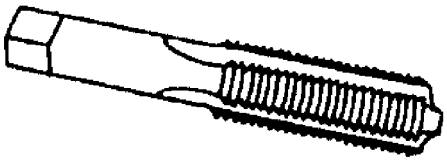

RG5100

JDG680

OUO1082,00002AC –19–01JUL04–18/18

05
170
17

Service Equipment and Tools (Four-Valve Head)

NOTE: Order tools according to information given in the U.S. SERVICEGARD™ Catalog or from the European Microfiche Tool Catalog (MTC). Some tools may be available from a local supplier.

Some of the SERVICEGARD™ tools listed in this manual may no longer be available for purchase. If you do not have the referenced tool, a suitable substitute may be available from a local supplier.

SERVICEGARD is a trademark of Deere & Company

OUO1089,0000239 –19–18JUN02–1/9

05
170
18

Crankshaft Front/Rear Rotation Adapter. JDG966

Rotate straight nose crankshaft from front and rear with flywheel removed.

OUO1089,0000239 –19–18JUN02–2/9

Valve Inspection Center

Check valves for out-of-round.

OUO1089,0000239 –19–18JUN02–3/9

Precision “Bevelled Edge” Straightedge D05012ST

Check cylinder head flatness.

OUO1089,0000239 –19–18JUN02–4/9

Plastic Brush

Clean fuel injection nozzle bores.

OUO1089,0000239 –19–18JUN02–5/9

Plastic Brush

Clean glow plug bores.

Continued on next page

OUO1089,0000239 –19–18JUN02–6/9

Plastic Brush

Clean valve guides.

OUO1089,0000239 –19–18JUN02–7/9

End Brush D17024BR

Remove carbon on valve seats.

OUO1089,0000239 –19–18JUN02–8/9

Torque Angle Gauge JT05993

Used to TORQUE-TURN flanged-head cylinder head and connecting rod cap screws.

OUO1089,0000239 –19–18JUN02–9/9

Other Material (Four-Valve Head)

Number	Name	Use
T43514 (U.S.)	LOCTITE 277 High Strength, Threadlock (50 ml Bottle)	Used to install end plugs on rocker arm shaft.
TY9375 (U.S.)	LOCTITE 592 (50 ml Bottle)	Applied to outer surface of fuel injection nozzle sleeves.
AR44402 (U.S.)	Lubricant	Coat Valve Stems and entire length of valve guide bores.
TY9370 (Canadian) 242 (LOCTITE®)	Thread Lock and Sealer (Medium Strength)	Apply to cap screws for rocker arm shaft end clamps.

Number	Name	Use
JDT305 (U.S.)	Lubricant	Lubricate head bolt before installation.

05
170
20

LOCTITE is a trademark of Loctite Corp.

OUO1089,000023A –19–23JAN04–1/1

Cylinder Block, Liners, Pistons and Rods Essential Tools

NOTE: Order tools according to information given in the U.S. SERVICEGARD™ Catalog or from the European Microfiche Tool Catalog (MTC).

Some of the SERVICEGARD™ tools listed in this manual may no longer be available for purchase. If you do not have the referenced tool, a suitable substitute may be available from a local supplier.

SERVICEGARD is a trademark of Deere & Company

Continued on next page

DPSG,OUO1004,2711 –19–26APR00–1/14

RG6246 –UN–05DEC97

Dial Indicator . . . . . D17526CI (English, in.) or D17527CI (Metric, mm)

Use with JDG451, KJD10123 or magnetic base to measure valve recess in cylinder head and piston and liner height.



RG6246

D17526CI or D17527CI

DPSG,OUO1004,2711 –19–26APR00–2/14

RG7029 –UN–05DEC97

Height Gauge. . . . . JDG451 or KJD10123

Used with a dial indicator to measure valve recess in cylinder head. Also used to measure piston and liner height.

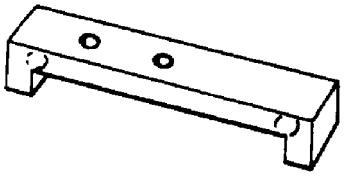

RG7029

JDG451 or KJD10123

05
170
21

DPSG,OUO1004,2711 –19–26APR00–3/14

RG5019 –UN–05DEC97

Cylinder Liner Puller . . . . . .D01062AA, D01073AA or KCD10001

Used to remove and install cylinder liners.

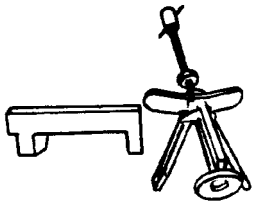

RG5019

D01062AA/D01073AA/KCD10001

DPSG,OUO1004,2711 –19–26APR00–4/14

Cylinder Liner Puller JDG1145

Used to remove and install cylinder liners.

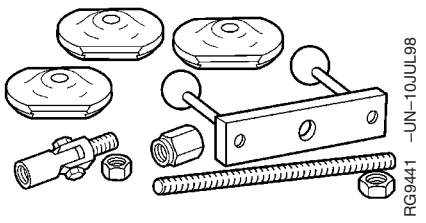

RG9441 –UN–10JUL98

JDG1145

Continued on next page

DPSG,OUO1004,2711 –19–26APR00–5/14

Piston Ring Expander JDE85, JDE135, KJD10140

Remove and install piston rings.

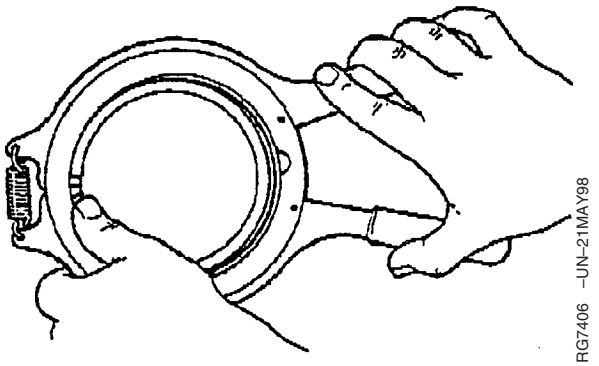

RG7406 –UN–21MAY98

JDE85/JDE135/KJD10140

DPSG,OUO1004,2711 –19–26APR00–6/14

RG5076 –UN–23AUG88

05
170
22

Piston Ring Groove Wear Gauge JDE62

Check wear of keystone ring groove on pistons with tapered rods.

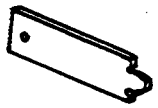

JDE62/JDG957

Piston Ring Groove Wear Gauge JDG957

Check wear of keystone ring groove on pistons with straight rods.

DPSG,OUO1004,2711 –19–26APR00–7/14

RG5074 –UN–07NOV97

Flexible Cylinder Hone D17004BR

Hone cylinder liners.



RG5074

D17004BR

Continued on next page

DPSG,OUO1004,2711 –19–26APR00–8/14

RG5107 –UN–23AUG88

Piston Pin Bushing Remover and Installer . . . . . JD286 (JD-286)[1]

Remove and install large 41 mm (1.6 in.) piston pin bushings.

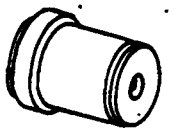

JD286 (JD-286)

Piston Pin Bushing Remover and Installer JDE88

Remove and install small 35 mm (1.3 in.) piston pin bushings.

[1]Order JD-286 when tool is ordered from European Parts Distribution Center (EPDC)

DPSG,OUO1004,2711 –19–26APR00–9/14

Connecting Rod Bushing Service Set JDG953

Replace pin bushing in connecting rods with tapered pin-end.

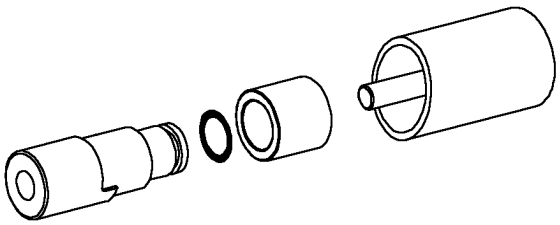

RG9126 –UN–22APR98

JDG953

DPSG,OUO1004,2711 –19–26APR00–10/14

Oil Gallery Plug Tool JDG782A

Used to remove and install oil gallery plug.

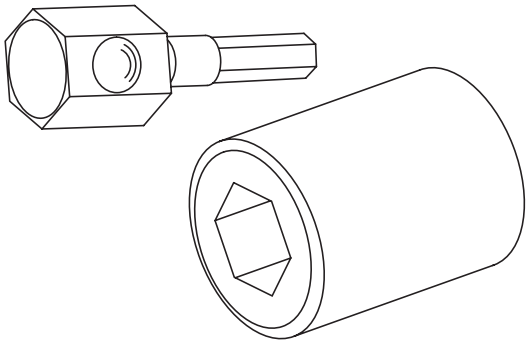

RG11804 –UN–25OCT01

JDG782A

Continued on next page

DPSG,OUO1004,2711 –19–26APR00–11/14

RG5100 –UN–05DEC97

Tap JDG680

Used to restore threaded holes in cylinder block for cylinder head cap screws.

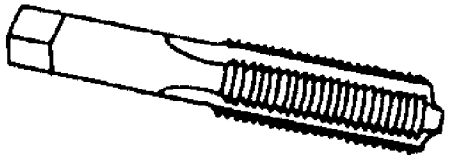

RG5100

JDG680

DPSG,OUO1004,2711 –19–26APR00–12/14

O-Ring Groove Cleaning Brush D17015BR

Clean cylinder liner O-ring groove in block.

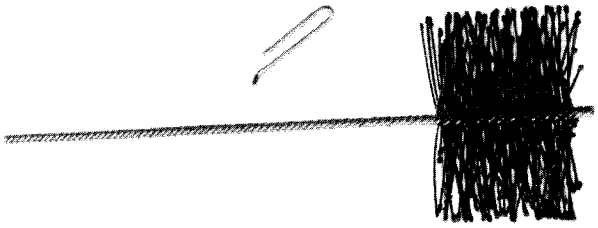

RG5075 –UN–07NOV97

RG5075

D17015BR

DPSG,OUO1004,2711 –19–26APR00–13/14

RG5031 –UN–05DEC97

Piston Ring Compressor. JDE84

Compress rings while installing pistons.



RG5031

JDE84

DPSG,OUO1004,2711 –19–26APR00–14/14

Cylinder Block, Liners, Pistons and Rods Service Equipment and Tools

NOTE: Order tools according to information given in the U.S. SERVICEGARD™ Catalog or from the European Microfiche Tool Catalog (MTC). Some tools may be available from a local supplier.

Some of the SERVICEGARD™ tools listed in this manual may no longer be available for purchase. If you do not have the referenced tool, a suitable substitute may be available from a local supplier.

SERVICEGARD is a trademark of Deere & Company

DPSG,OUO1004,2713 –19–26APR00–1/4

Piston Ring Groove Cleaning Tool . . . . . N/A

Clean piston ring grooves.

DPSG,OUO1004,2713 –19–26APR00–2/4

Precision “Bevelled Edge” Straightedge D05012ST

Check cylinder head flatness.

DPSG,OUO1004,2713 –19–26APR00–3/4

Torque Angle Gauge JT05993

Used to TORQUE-TURN flanged-head cylinder head and connecting rod cap screws.

DPSG,OUO1004,2713 –19–26APR00–4/4

Cylinder Block, Liners, Pistons and Rods Other Materials

Number	Name	Use
N/A (U.S.)	PLASTIGAGE®	Determine connecting rod bearing-to-journal oil clearance.
T43512 (U.S.) TY9473 (Canadian) 242 (LOCTITE®)	Thread Lock and Sealer (Medium Strength)	Apply to cylinder block oil gallery plugs.
TY9375 (U.S.) TY9480 (Canadian) 592 (LOCTITE®)	Pipe Sealant	Apply to cylinder block coolant gallery plugs.
T43514 (U.S.) TY9475 (Canadian) 277 (LOCTITE®)	Plastic Gasket	Apply to steel caps/soft plugs in cylinder block.
AR54749 (U.S.)	Soap Lubricant	Apply to cylinder liner O-rings and packing.

05
170
26

PLASTIGAGE is a registered trademark of DANA Corp.
LOCTITE is a registered trademark of Loctite Corp.

DPSG,OUO1004,2712 –19–26APR00–1/1

Crankshaft, Main Bearings and Flywheel Essential Tools

NOTE: Order tools according to information given in the U.S. SERVICEGARD™ Catalog or from the European Microfiche Tool Catalog (MTC).

Some of the SERVICEGARD™ tools listed in this manual may no longer be available for purchase. If you do not have the referenced tool, a suitable substitute may be available from a local supplier.

SERVICEGARD is a trademark of Deere & Company

DPSG,OUO1004,2715 –19–26APR00–1/16

RG6246 –UN–05DEC97

Dial Indicator . . . . . D17526CI (English, in.) or D17527CI (Metric, mm)

Used with magnetic base to measure radial runout (concentricity) and wobble on vibration damper.



RG6246

D17526CI or D17527CI

DPSG,OUO1004,2715 –19–26APR00–2/16

RG7056 –UN–17JUN05

Flywheel Turning Tool JDE81-1

Used to rotate flywheel on engines with 129-tooth flywheel ring gear and a 29.9 mm (1.18 in.) flywheel housing guide bore diameter. JDG820 (formerly JDE81-1) may be used if JDE81-1 is not available. JDG820 (formerly JDE81-1) Flywheel Turning Tool, MUST be used for 6.8L engines in 7400 and 7600 Tractors.

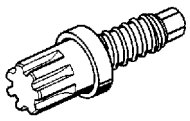

JDE81-1

Continued on next page

DPSG,OUO1004,2715 –19–26APR00–3/16

RG7056 –UN–17JUN05

Flywheel Turning Tool . . . . . JDG820 (formerly JDE81-1)

Used to rotate flywheel on 6.8L engines in 7400 and 7600 Tractors.

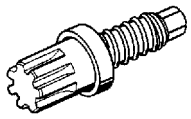

JDG820 (formerly JDE81-1)

DPSG,OUO1004,2715 –19–26APR00–4/16

Flywheel Turning Tool JDE83

Used to rotate flywheel on engines with 142-tooth flywheel ring gear and a 26.5 mm (1.04 in.) flywheel housing guide bore diameter.

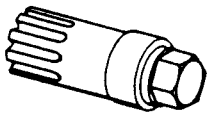

RG6251 –UN–22JUL92

JDE83

DPSG,OUO1004,2715 –19–26APR00–5/16

RG5109 –UN–23AUG88

Seal Remover JDG22

Remove crankshaft front oil seal with timing gear cover installed. Also used to remove crankshaft rear oil seal without removing flywheel housing.



JDG22

DPSG,OUO1004,2715 –19–26APR00–6/16

RG6214 –UN–05DEC97

Seal Puller Adapter JDG719

Used with standard metal screw, JDE38-2 shank, and JDE38-3 Slide Handle to remove front crankshaft oil seal with timing gear cover installed. Also used to remove rear crankshaft oil seal with seal housing installed.

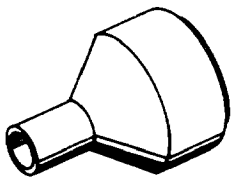

RG6214

JDG719

Continued on next page

DPSG,OUO1004,2715 –19–26APR00–7/16

Timing Pin JDG1571

Used to lock flywheel at No. 1 TDC for injection pump timing. This timing pin MUST be used on engine applications using the tapered-nose crankshaft due to the higher torque specification for damper retaining cap screw.

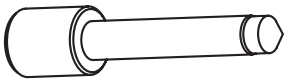

RG12031 –UN–20DEC01

JDG1571

DPSG,OUO1004,2715 –19–26APR00–8/16

RG5068 –UN–05DEC97

05
170
29

Timing Pin JDE81-4

Used to lock engine/flywheel.

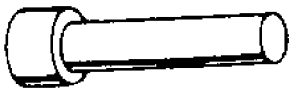

RG5068

Timing Pin

DPSG,OUO1004,2715 –19–26APR00–9/16

Front Wear Sleeve Puller JDG992-1

Used with JDG992-2 Front Wear Sleeve Puller to remove front wear sleeve with timing gear cover installed.

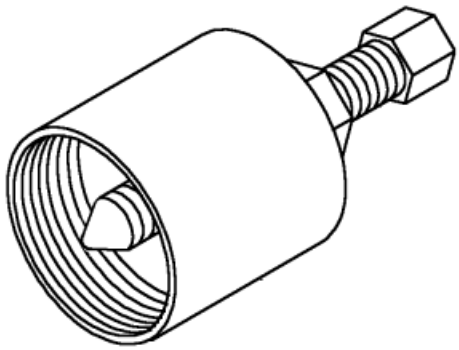

RG9124 –UN–22APR98

JDG992-1

Continued on next page

DPSG,OUO1004,2715 –19–26APR00–10/16

Front Wear Sleeve Puller JDG992-2

Used with JDG992-1 to remove front wear sleeve with timing gear cover installed.

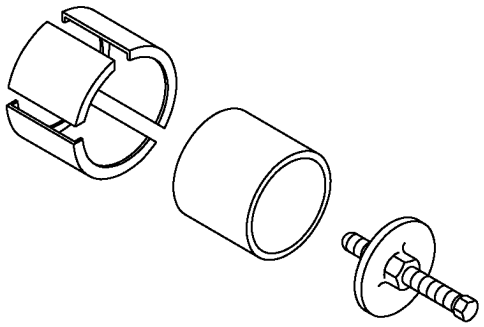

RG9125 –UN–19MAY98

JDG992-2

DPSG,OUO1004,2715 –19–26APR00–11/16

05
170
30

Seal and Wear Sleeve Remover. JDG698A

Remove unitized crankshaft rear oil seal and wear sleeve.

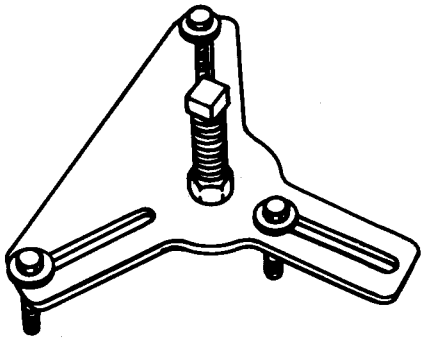

RG5631 –UN–12APR90

JDG698A

DPSG,OUO1004,2715 –19–26APR00–12/16

CD30241 –UN–08MAR95

Rear Crankshaft Oil Seal/Wear Sleeve Puller . . JDG645E

Remove rear oil seal/wear sleeve from crankshaft flange.

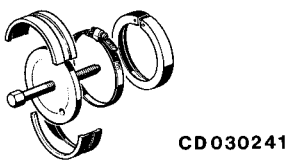

JDG645E

Continued on next page

DPSG,OUO1004,2715 –19–26APR00–13/16

Rear Oil Seal/Wear Sleeve Installer Set. . . . JT30040B or KCD10002A

Install crankshaft rear oil seal/wear sleeve assembly.

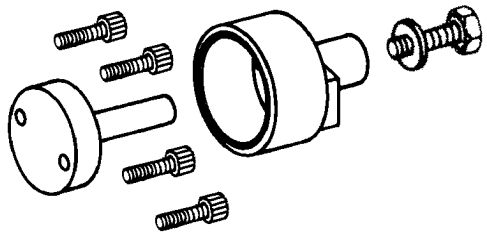

RG9122 –UN–22APR98

JT30040B or KCD10002A

DPSG,OUO1004,2715 –19–26APR00–14/16

05
170
31

Rear Oil Seal/Wear Sleeve Installer Set. JDG476

Install unitized teflon crankshaft rear oil seal/wear sleeve assembly.

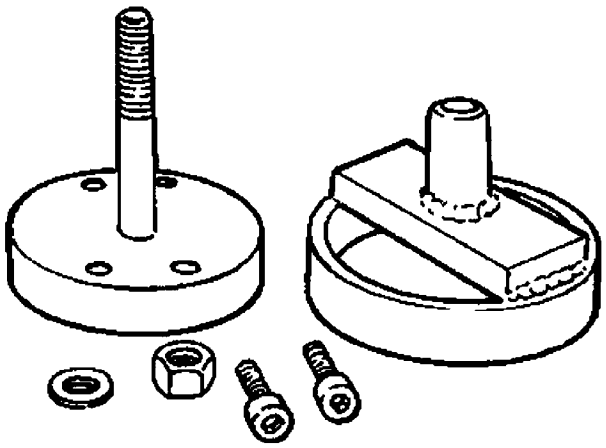

RG12448 –19–04DEC03

JDG476

Continued on next page

DPSG,OUO1004,2715 –19–26APR00–15/16

Crankshaft Gear and Front Oil Seal Installer JDG954

Used to install the crankshaft gear either prior to, or after installing crankshaft into engine. Also used to install front oil seal with timing gear cover installed on engine and used to install timing wheel on crankshaft.

JDG954-1B—Installer
JDG954-2—Adapter
JDG954-3—Special Cap Screw (4 used)
JDG954-4—Spacer
JDG954-5—Installer
JDG954-6—Guide Sleeve
JDG954-7—Taper Crank Adapter
JDG954-8—Forcing Screw

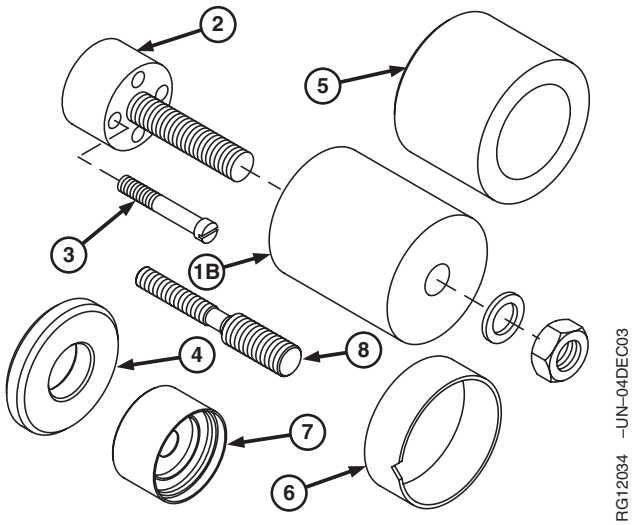

JDG954

DPSG,OUO1004,2715 –19–26APR00–16/16

05
170
32

Crankshaft, Main Bearings and Flywheel Service Equipment and Tools

NOTE: Order tools according to information given in the U.S. SERVICEGARD™ Catalog or from the European Microfiche Tool Catalog (MTC). Some tools may be available from a local supplier.

Some of the SERVICEGARD™ tools listed in this manual may no longer be available for purchase. If you do not have the referenced tool, a suitable substitute may be available from a local supplier.

SERVICEGARD is a trademark of Deere & Company

DPSG,OUO1004,2716 –19–26APR00–1/4

Bushing, Bearing and Seal Driver Set D01045AA

Install pilot bearing in flywheel.

DPSG,OUO1004,2716 –19–26APR00–2/4

Pulling Attachment. D01218AA

Use with D01200AA Push Puller to remove crankshaft gear from crankshaft.

DPSG,OUO1004,2716 –19–26APR00–3/4

Push Puller D01200AA

Use with D01218AA to remove crankshaft gear from crankshaft.

DPSG,OUO1004,2716 –19–26APR00–4/4

Crankshaft, Main Bearings and Flywheel Other Materials

Number	Name	Use
TY16285 (U.S.) CXTY16285 (Canadian) 7649 (LOCTITE®)	Cure Primer	Used to clean nose of crankshaft for damper installation.
TY15969 (U.S.) TY9479 (Canadian) 680 (LOCTITE®)	Retaining Compound (Maximum Strength)	Used to retain vibration damper to crankshaft.
	Brake Kleen or Ignition Cleaner	Remove sealant from crankshaft flange.
TY15969 (U.S.) TY9479 (Canadian) 680 (LOCTITE®)	Retaining Compound (Maximum Strength)	Apply to crankshaft front wear sleeve.
T43513 (U.S.) TY9474 (Canadian) 271 (LOCTITE®)	Thread Lock and Sealer (High Strength)	Apply to threaded studs of flywheel (option code 1557).
	PLASTIGAGE®	Check main bearing-to-crankshaft journal oil clearance.
PM38655 (U.S.) TY9484 (Canadian) LOCTITE® 515 (LOCTITE®)	Flexible Form-In-Place Gasket	Apply to cylinder block front plate, crankshaft flywheel hub (1568 flywheel option code), rear face of cylinder block prior to installing flywheel housing and Merit tractor flywheel housing M20 cap screw surface.
T43514 (U.S.) TY9475 (Canadian) 277 (LOCTITE®)	Plastic Gasket	Apply to torque converter access hole plug.

LOCTITE is a trademark of Loctite Corp.
LOCTITE is a registered trademark of Loctite Corp.
PLASTIGAGE is a registered trademark of DANA Corp.

DPSG,OUO1004,2717 –19–24MAY02–1/1

Camshaft, Balancer Shafts and Timing Gear Train Essential Tools

NOTE: Order tools according to information given in the U.S. SERVICEGARD™ Catalog or from the European Microfiche Tool Catalog (MTC).

Some of the SERVICEGARD™ tools listed in this manual may no longer be available for purchase. If you do not have the referenced tool, a suitable substitute may be available from a local supplier.

SERVICEGARD is a trademark of Deere & Company

DPSG,OUO1004,2723 –19–26APR00–1/13

RG7056 –UN–17JUN05

Flywheel Turning Tool JDE81-1

Used to rotate flywheel on engines with 129-tooth flywheel ring gear and a 29.9 mm (1.18 in.) flywheel housing guide bore diameter. JDG820 (formerly JDE81-1) may be used if JDE81-1 is not available. JDG820 (formerly JDE81-1) Flywheel Turning Tool, MUST be used for 6.8L engines in 7400 and 7600 Tractors.

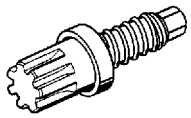

JDE81-1

DPSG,OUO1004,2723 –19–26APR00–2/13

RG7056 –UN–17JUN05

Flywheel Turning Tool . . . . . JDG820 (formerly JDE81-1)

Used to rotate flywheel on 6.8L engines in 7400 and 7600 Tractors.

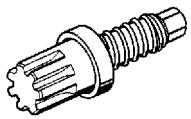

JDG820 (formerly JDE81-1)

Continued on next page

DPSG,OUO1004,2723 –19–26APR00–3/13

Flywheel Turning Tool JDE83

Used to rotate flywheel on engines with 142-tooth flywheel ring gears and a 26.5 mm (1.04 in.) ID flywheel housing guide bore diameter.

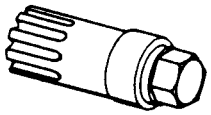

RG6251 –UN–22JUL92

JDE83

DPSG,OUO1004,2723 –19–26APR00–4/13

RG5068 –UN–05DEC97

Timing Pin JDE81-4

Used to lock flywheel at No. 1 TDC for injection pump timing. Do not use to lock engine when removing or installing damper retaining cap screws.

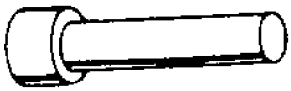

RG5068

JDE81-4

05
170
36

DPSG,OUO1004,2723 –19–26APR00–5/13

Timing Pin JDG1571

Used to lock flywheel at No. 1 TDC for injection pump timing. This timing pin MUST be used on engine applications using the tapered-nose crankshaft due to the higher torque specification for damper retaining cap screw.

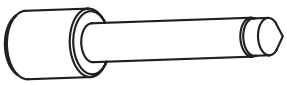

RG12031 –UN–20DEC01

JDG1571

Continued on next page

DPSG,OUO1004,2723 –19–26APR00–6/13

Camshaft Bushing Service Set. JDG739B

Used to remove and install front camshaft bushing.

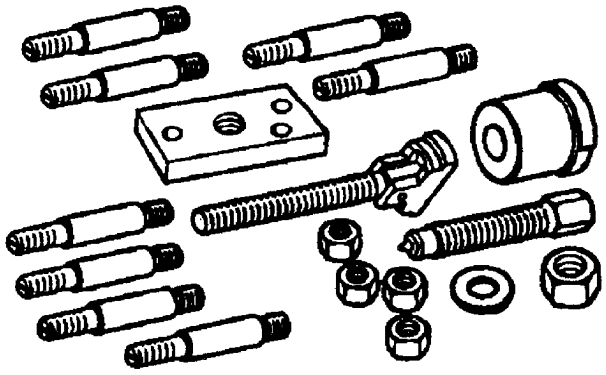

RG9121 –UN–22APR98

JDG739B

DPSG,OUO1004,2723 –19–26APR00–7/13

Balancer Shaft Bushing Driver . . . . . .JD249 (JD-249)[1]

Use with JDG963 Balancer Shaft Bushing Adapter to replace balancer shaft bushings.

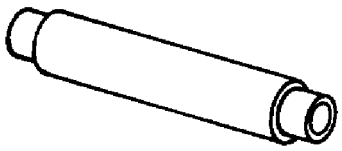

RG5120 –UN–05DEC97

JD249 (JD-249)

[1]Order JD-249 when tool is ordered from European Parts Distribution Center (EPDC)

DPSG,OUO1004,2723 –19–26APR00–8/13

RG7940 –UN–15JAN98

Balancer Shaft Bushing Adapter. JDG963

Use with JD249 (JD-249) Balancer Shaft Bushing Driver to remove and install balancer shaft bushings.

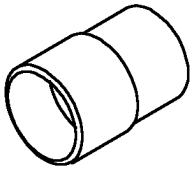

JDG963

Continued on next page

DPSG,OUO1004,2723 –19–26APR00–9/13

Idler Gear Bushing Driver . . . . . .JD252 (JD-252)[1]

Use with JDG537 Handle to remove and install idler gear bushings.



RG10566

JD252 (JD-252)

RG10566 –UN–28JAN00

[1]Order JD-252 when tool is ordered from European Parts Distribution Center (EPDC)

DPSG,OUO1004,2723 –19–26APR00–10/13

05
170
38

Handle JDG537 (OTC815)

Use with JD252 (JD-252) Idler Gear Bushing Driver to remove and install idler gear bushings.

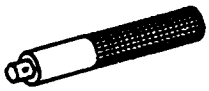

RG10567

JDG537

RG10567 –UN–28JAN00

Continued on next page

DPSG,OUO1004,2723 –19–26APR00–11/13

Gear Timing Tool . . . . . .JD254A (JD-254A)[1]

Time camshaft gear, injection pump gear and balancer shafts.

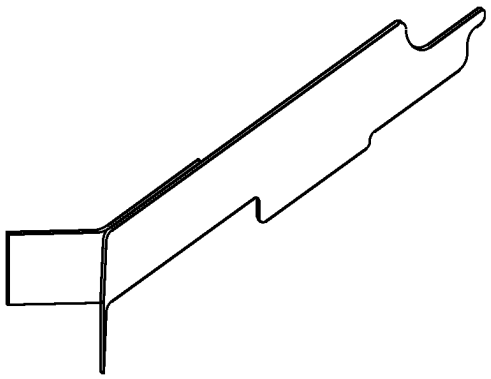

RG7443 –UN–23NOV97

JD254A (JD-254A)

[1]Order JD-254A when tool is ordered from European Parts Distribution Center (EPDC)

DPSG,OUO1004,2723 –19–26APR00–12/13

RG7939 –UN–05JAN98

Idler Gear Installer Pilot JDG791A

Guide upper idler gear onto idler shaft.

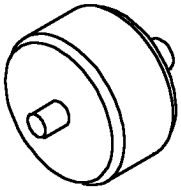

JDG791A

DPSG,OUO1004,2723 –19–26APR00–13/13

Camshaft, Balancer Shafts and Timing Gear Train Service Equipment and Tools

NOTE: Order tools according to information given in the U.S. SERVICEGARD™ Catalog or from the European Microfiche Tool Catalog (MTC). Some tools may be available from a local supplier.

Some of the SERVICEGARD™ tools listed in this manual may no longer be available for purchase. If you do not have the referenced tool, a suitable substitute may be available from a local supplier.

SERVICEGARD is a trademark of Deere & Company

DPSG,OUO1004,2724 –19–26APR00–1/5

05
170
40

Magnetic Follower Holder Kit D15001NU

Hold camshaft followers when removing and installing camshaft.

DPSG,OUO1004,2724 –19–26APR00–2/5

Balancer Shaft Holding Tool . . . . . .JD247 (JD-247)[1]

Hold balancer shaft while pressing gear on shaft.

[1]*Order JD-247 when tool is ordered from European Parts Distribution Center (EPDC)*

DPSG,OUO1004,2724 –19–26APR00–3/5

TORX® Driver Set

Remove and install engine front plate mounting hardware.

TORX is a registered trademark of Camcar/Textron

Continued on next page

DPSG,OUO1004,2724 –19–26APR00–4/5

Master Driver Set D01045AA

Use discs with JDG537 Handle to remove and install idler gear bushings. Install pilot bearing in flywheel.

DPSG,OUO1004,2724 –19–26APR00–5/5

Camshaft, Balancer Shafts and Timing Gear Train Other Materials

Number	Name	Use
TY6333 (U.S.)	High-Temperature Grease	Coat camshaft followers, camshaft lobes, journals and bushings during installation. Coat idler gear, bushing, and shaft during installation.
PM38655 (U.S.) TY9484 (Canadian) 515 (LOCTITE®)	Flexible Form-In-Place Gasket	Apply to cylinder block front plate.
T43512 (U.S.) TY9473 (Canadian) 242 (LOCTITE®)	Thread Lock and Sealer (Medium Strength)	Apply to injection pump cover cap screws.
T43513 (U.S.) TY9474 (Canadian) 271 (LOCTITE®)	Thread Lock and Sealer (High Strength)	Apply to four timing gear cover studs used on OEM engine applications with auxiliary driven hydraulic pump.
TY9375 (U.S.) TY9480 (Canadian) 592 (LOCTITE®)	Pipe Sealant	Apply to one timing gear cover cap screw.

LOCTITE is a registered trademark of Loctite Corp.

DPSG,OUO1004,2725 –19–26APR00–1/1

Lubrication System Essential Tools

NOTE: Order tools according to information given in the U.S. SERVICEGARD™ Catalog or from the European Microfiche Tool Catalog (MTC).

Some of the SERVICEGARD™ tools listed in this manual may no longer be available for purchase. If you do not have the referenced tool, a suitable substitute may be available from a local supplier.

SERVICEGARD is a trademark of Deere & Company

DPSG,OUO1004,2727 –19–26APR00–1/12

RG5061 –UN–05DEC97

Spring Compression Tester D01168AA

Test oil bypass valve and oil pressure regulating valve spring compression.

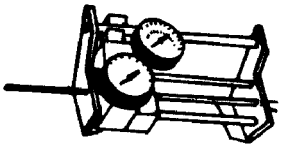

RG5061

D01168AA

DPSG,OUO1004,2727 –19–26APR00–2/12

RG9118 –UN–17APR98

Oil Pressure Relief Valve Bushing Driver . . . . . JD248A (JD-248A)[1]

Use with JDG536 Handle to install oil pressure relief valve bushing.



JD248A (JD-248A)

[1]Order JD-248A when tool is ordered from European Parts Distribution Center (EPDC)

DPSG,OUO1004,2727 –19–26APR00–3/12

RG9117 –UN–17APR98

Handle JDG536 (OCT813)

Use with JD248A (JD-248A) Bushing Driver to install oil pressure relief valve bushing.

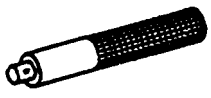

JDG536

Continued on next page

DPSG,OUO1004,2727 –19–26APR00–4/12

Pressure Regulating Valve Installer and Remover Tool Set. JDG1517

Used to remove oil pressure regulating valve from the engine block.

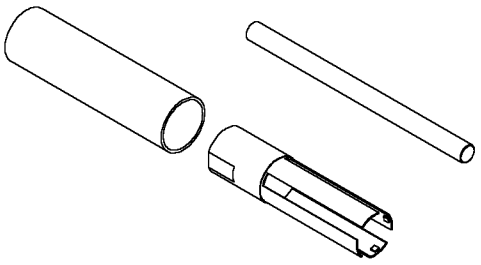

RG11788 –UN–25SEP01

JD1517

DPSG,OUO1004,2727 –19–26APR00–5/12

Dipstick Driver JDG965

Install dipstick tube in block.

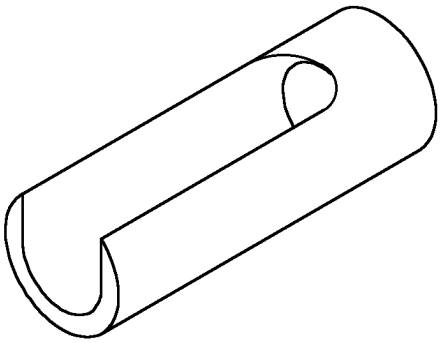

RG7982 –UN–15JAN98

JDG965

DPSG,OUO1004,2727 –19–26APR00–6/12

Dipstick Fitting Installer. JDG1146

Install dipstick tube fitting in block.

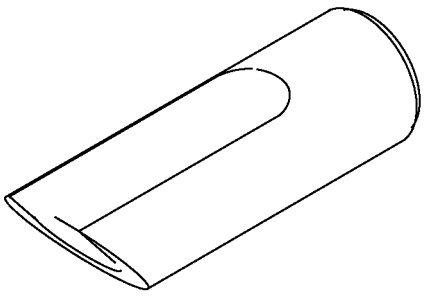

RG9114 –UN–07APR98

JDG1146

Continued on next page

DPSG,OUO1004,2727 –19–26APR00–7/12

RG7056 –UN–17JUN05

Flywheel Turning Tool JDE81-1

Used to rotate flywheel on engines with 129-tooth flywheel ring gear and a 29.9 mm (1.18 in.) flywheel housing guide bore diameter. JDG820 (formerly JDE81-1) Flywheel Turning Tool, MUST be used for 6.8L engines in 7400 and 7600 Tractors.

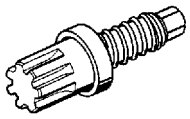

JDE81-1

DPSG,OUO1004,2727 –19–26APR00–8/12

RG7056 –UN–17JUN05

Flywheel Turning Tool . . . . . JDG820 (formerly JDE81-1)

Used to rotate flywheel on 6.8L engines in 7400 and 7600 Tractors.

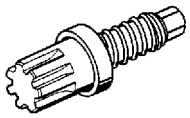

JDG820 (formerly JDE81-1)

DPSG,OUO1004,2727 –19–26APR00–9/12

Flywheel Turning Tool JDE83

Used to rotate flywheel on engines with 142-tooth flywheel ring gear and a 26.5 mm (1.04 in.) flywheel housing guide bore diameter.

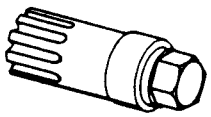

RG6251 –UN–22JUL92

JDE83

DPSG,OUO1004,2727 –19–26APR00–10/12

RG5068 –UN–05DEC97

Timing Pin JDE81-4

Used to lock flywheel at No. 1 TDC for injection pump timing. Do not use to lock engine when removing or installing damper retaining cap screws.

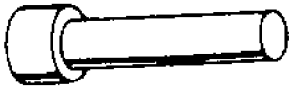

RG5068

JDE81-4

Continued on next page

DPSG,OUO1004,2727 –19–26APR00–11/12

Timing Pin JDG1571

Used to lock flywheel at No. 1 TDC for injection pump timing. This timing pin MUST be used on engine applications using the tapered-nose crankshaft due to the higher torque specification for damper retaining cap screw.

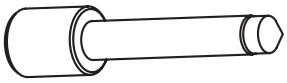

RG12031 –UN–20DEC01

JDG1571

DPSG,OUO1004,2727 –19–26APR00–12/12

05
170
46

Lubrication System Service Equipment and Tools

NOTE: Order tools according to information given in the U.S. SERVICEGARD™ Catalog or from the European Microfiche Tool Catalog (MTC). Some tools may be available from a local supplier.

Some of the SERVICEGARD™ tools listed in this manual may no longer be available for purchase. If you do not have the referenced tool, a suitable substitute may be available from a local supplier.

SERVICEGARD is a trademark of Deere & Company

DPSG,OUO1004,2728 –19–26APR00–1/5

05
170
47

Blind-Hole Puller Set D01061AA

Remove oil filter bypass valve (extended-life filter), oil pressure regulating valve seat and dipstick tube from block.

DPSG,OUO1004,2728 –19–26APR00–2/5

Collet (5/16 in.) JT01724 (33856)

Used with JT01720 Actuator Pin and 1156 Slide Hammer to remove dipstick tube from cylinder block.

DPSG,OUO1004,2728 –19–26APR00–3/5

Actuator Pin JT01720 (28250)

Used with JT01724 Collet and 1156 Slide Hammer to remove dipstick tube from cylinder block.

Continued on next page

DPSG,OUO1004,2728 –19–26APR00–4/5

Slide Hammer . . . . . 1156 (Formerly D01299AA)

Used with JDG1517 Pressure Regulating Valve Installer and Remover Tool Set to remove oil pressure regulating valve. Used with JT01724 Collet and JT01720 Actuator Pin to remove dipstick tube from cylinder block.

DPSG,OUO1004,2728 –19–26APR00–5/5

Lubrication System Other Materials

Number	Name	Use
T43512 (U.S.) TY9473 (Canadian) 242 (LOCTITE®)	Thread Lock and Sealer (Medium Strength)	Apply to oil cooler-to-housing cap screws, oil fill tube cap screws, and end of dipstick tube.
T43512 (U.S.) TY9473 (Canadian) 242 (LOCTITE®)	Thread Lock and Sealer (Medium Strength)	Apply to oil line clamp cap screw.
T43513 (U.S.) TY9474 (Canadian) 271 (LOCTITE®)	Thread Lock and Sealer (High Strength)	Apply to dipstick tube with fitting.
PM38655 (U.S.) TY9484 (Canadian) 515 (LOCTITE®)	Flexible Form-in-Place Gasket	Apply to oil pan rail.
TY9375 (U.S.) TY9480 (Canadian) 592 (LOCTITE®)	Pipe Sealant	Apply to oil pan elbow drain fitting.

LOCTITE is a registered trademark of Loctite Corp.

DPSG,OUO1004,2729 –19–21NOV03–1/1

Cooling System Essential Tools

NOTE: Order tools according to information given in the U.S. SERVICEGARD™ Catalog or from the European Microfiche Tool Catalog (MTC).

Some of the SERVICEGARD™ tools listed in this manual may no longer be available for purchase. If you do not have the referenced tool, a suitable substitute may be available from a local supplier.

SERVICEGARD is a trademark of Deere & Company

DPSG,OUO1004,2731 –19–26APR00–1/4

RG7950 –UN–05JAN98

05
170
50

Coolant Pump Bearing Installer JDG956

Install coolant pump bearing.

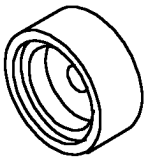

JDG956

DPSG,OUO1004,2731 –19–26APR00–2/4

JDG529 –UN–10MAY95

Belt Tension Gauge. JDG1341

Used to check belt tension on 8-rib poly-vee belt.

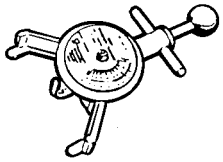

JDG1341

Continued on next page

DPSG,OUO1004,2731 –19–26APR00–3/4

Belt Tensioning Tool JDG1520

Used to adjust belt tension on engines with manual belt tensioner.

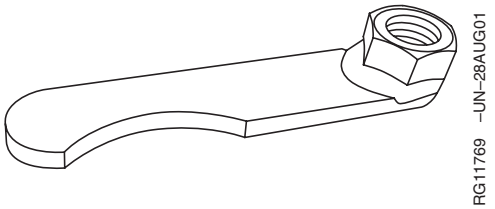

JDG1520

DPSG,OUO1004,2731 –19–26APR00–4/4

Cooling System Service Equipment and Tools

NOTE: Order tools according to information given in the U.S. SERVICEGARD™ Catalog or from the European Microfiche Tool Catalog (MTC). Some tools may be available from a local supplier.

Some of the SERVICEGARD™ tools listed in this manual may no longer be available for purchase. If you do not have the referenced tool, a suitable substitute may be available from a local supplier.

SERVICEGARD is a trademark of Deere & Company

DPSG,OUO1004,2732 –19–26APR00–1/2

05
170
52

Bushing, Bearing and Seal Driver Set D01045AA

Remove inner seal in coolant pump housing.

DPSG,OUO1004,2732 –19–26APR00–2/2

Cooling System Other Materials

Number	Name	Use
PT507 (U.S.)	Multi-Purpose Grease	Thermostat housing O-rings.
N/A (U.S.) 5699 (LOCTITE®)	RTV Silicone Sealant	Seal coolant pump insert to timing gear cover.
JDT308 (U.S.)	Soap Lubricant	Apply to coolant heater O-ring.
TY9375 (U.S.) TY9480 (Canadian) 592 (LOCTITE®)	Pipe Sealant	Apply to coolant heater threads.

LOCTITE is a trademark of Loctite Corp.
LOCTITE is a registered trademark of Loctite Corp.

DPSG,OUO1004,2733 –19–21NOV03–1/1

Air Intake and Exhaust System Other Materials

Number	Name	Use
PT569 (U.S.)	NEVER-SEEZ®	Exhaust manifold-to-cylinder head cap screws.
TY9375 (U.S.) TY9480 (Canadian) 592 (LOCTITE®)	Pipe Sealant	Air heater threads.

NEVER-SEEZ is a registered trademark of Emhart Chemical Group
LOCTITE is a registered trademark of Loctite Corp.

DPSG,OUO1004,2735 –19–26APR00–1/1

Starting and Charging System Essential Tools

NOTE: Order tools according to information given in the U.S. SERVICEGARD™ Catalog or from the European Microfiche Tool Catalog (MTC).

Some of the SERVICEGARD™ tools listed in this manual may no longer be available for purchase. If you do not have the referenced tool, a suitable substitute may be available from a local supplier.

SERVICEGARD is a trademark of Deere & Company

DPSG,OUO1004,1141 –19–18NOV99–1/2

Starter Motor Removal Tool. KJD10213

Used to remove starter motor on when access is limited.

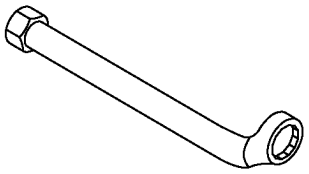

RG9116 –UN–19MAY98

KJD10213

DPSG,OUO1004,1141 –19–18NOV99–2/2

Diagnostic Essential Tools

NOTE: Order tools according to information given in the U.S. SERVICEGARD™ Catalog or from the European Microfiche Tool Catalog (MTC).

Some of the SERVICEGARD™ tools listed in this manual may no longer be available for purchase. If you do not have the referenced tool, a suitable substitute may be available from a local supplier.

SERVICEGARD is a trademark of Deere & Company

DPSG,OUO1004,2738 –19–26APR00–1/6

RG5161 –UN–23AUG88

Compression Test Set . . JT01674 (formerly D14546BA or FKM10021)

Used to check cylinder compression pressure. Use adapter and gauge/hose assembly from set.

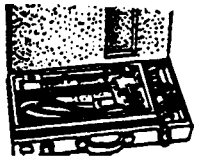

JT01674

DPSG,OUO1004,2738 –19–26APR00–2/6

Oil Gallery Plug Tool JDG782A

Used to remove and install oil gallery plug.

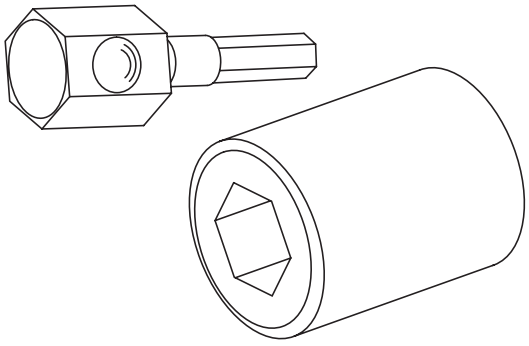

RG11804 –UN–25OCT01

JDG782A

Continued on next page

DPSG,OUO1004,2738 –19–26APR00–3/6

RG5162 –UN–23AUG88

Universal Pressure Test Kit . . . . . JT05470 (D15027NU or FKM10002)

Used to check engine oil pressure.

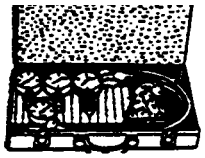

JT05470

DPSG,OUO1004,2738 –19–26APR00–4/6

Cooling System Pressure Pump D05104ST

Used to pressure test radiator cap and cooling system.



R26406N –UN–29NOV88

D05104ST

DPSG,OUO1004,2738 –19–26APR00–5/6

RG5163 –UN–23AUG88

Manifold Pressure Tester . . . . . JDE147 or FKM10002

Used to test intake manifold pressure on turbocharged engines.

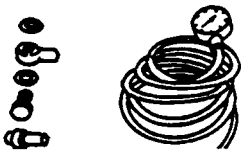

JDE147

DPSG,OUO1004,2738 –19–26APR00–6/6

Diagnostic Service Equipment and Tools

NOTE: Order tools according to information given in the U.S. SERVICEGARD™ Catalog or from the European Microfiche Tool Catalog (MTC). Some tools may be available from a local supplier.

Some of the SERVICEGARD™ tools listed in this manual may no longer be available for purchase. If you do not have the referenced tool, a suitable substitute may be available from a local supplier.

SERVICEGARD is a trademark of Deere & Company

DPSG,OUO1004,2739 –19–26APR00–1/4

Water Vacuum Gauge Kit D05022ST

Used to test air filter restriction indicator switch.

DPSG,OUO1004,2739 –19–26APR00–2/4

Turbocharger Shield JDG576

Cover turbocharger inlet when testing engine with air filter system removed.

DPSG,OUO1004,2739 –19–26APR00–3/4

Air Regulator with Gauge

Pressurize wastegate actuator to test operation of wastegate.

DPSG,OUO1004,2739 –19–26APR00–4/4

How to Make Tools

These tools can be made in a service shop using common shop tools and locally obtained materials.

RG,199,JW7719 –19–25NOV97–1/1

DFRG3—Cylinder Liner Holding Fixture

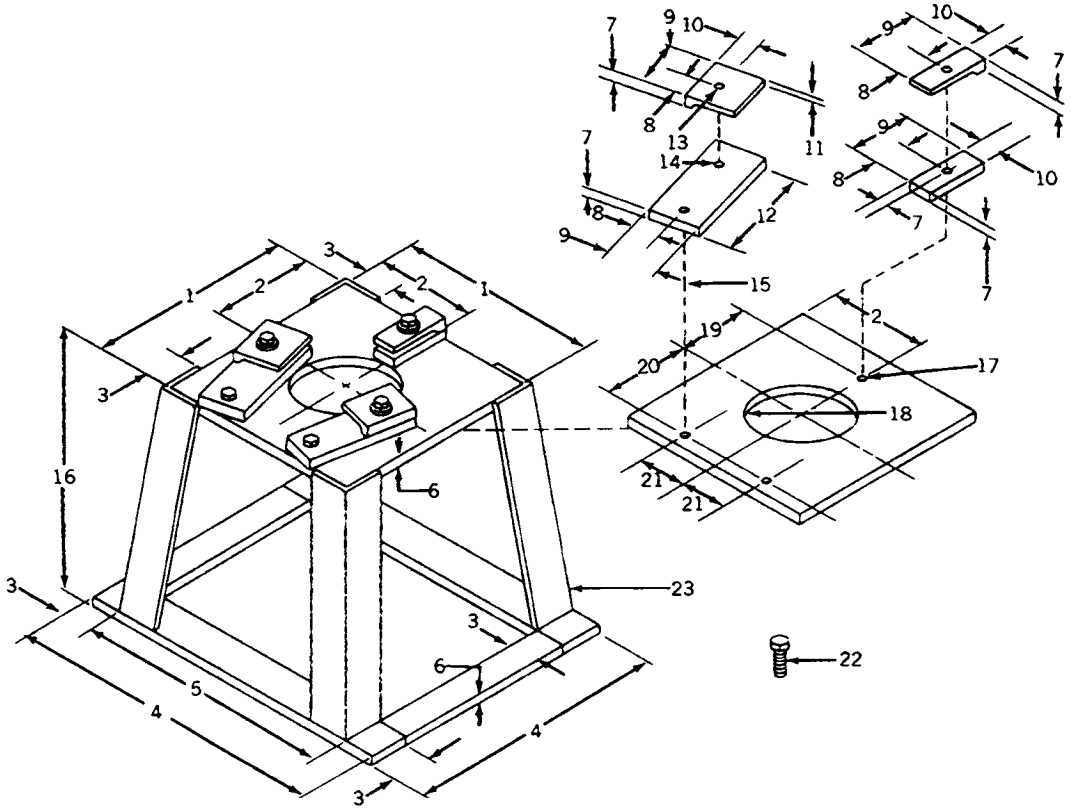

Cylinder Liner Holding Fixture

1—254.0 mm (10 in.)
2—127.0 mm (5 in.)
3—38.1 mm (1.5 in.)
4—405.4 mm (16 in.)
5—330.2 mm (13 in.)
6—9.52 mm (0.38 in.)
7—12.7 mm (0.5 in.)
8—31.8 mm (1.25 in.)
9—63.5 mm (2.5 in.)
10—25.4 mm (1 in.)
11—6.35 mm (0.25 in.)
12—152.4 mm (6 in.)
13—0.328 in. Drill Through
14—5/16 in. —18 Tap
15—2 (assemblies above) used
16—304.8 mm (12 in.)
17—5/16 in. —18 Tap
18—69.85 mm (2.75 in.) Radius
19—101.6 mm (4 in.)
20—111.25 mm (4.38 in.)
21—60.45 mm (2.38 in.)
22—5/16 in. x 1 in. Cap Screw
23—38.1 mm (1.5 in.) Angle Iron

RG10743 –UN–07JUN00

RG,199,JW7720 –19–23MAY00–1/1

DFRG5—Injection Pump Front Plate Timing Mark Transfer Tool

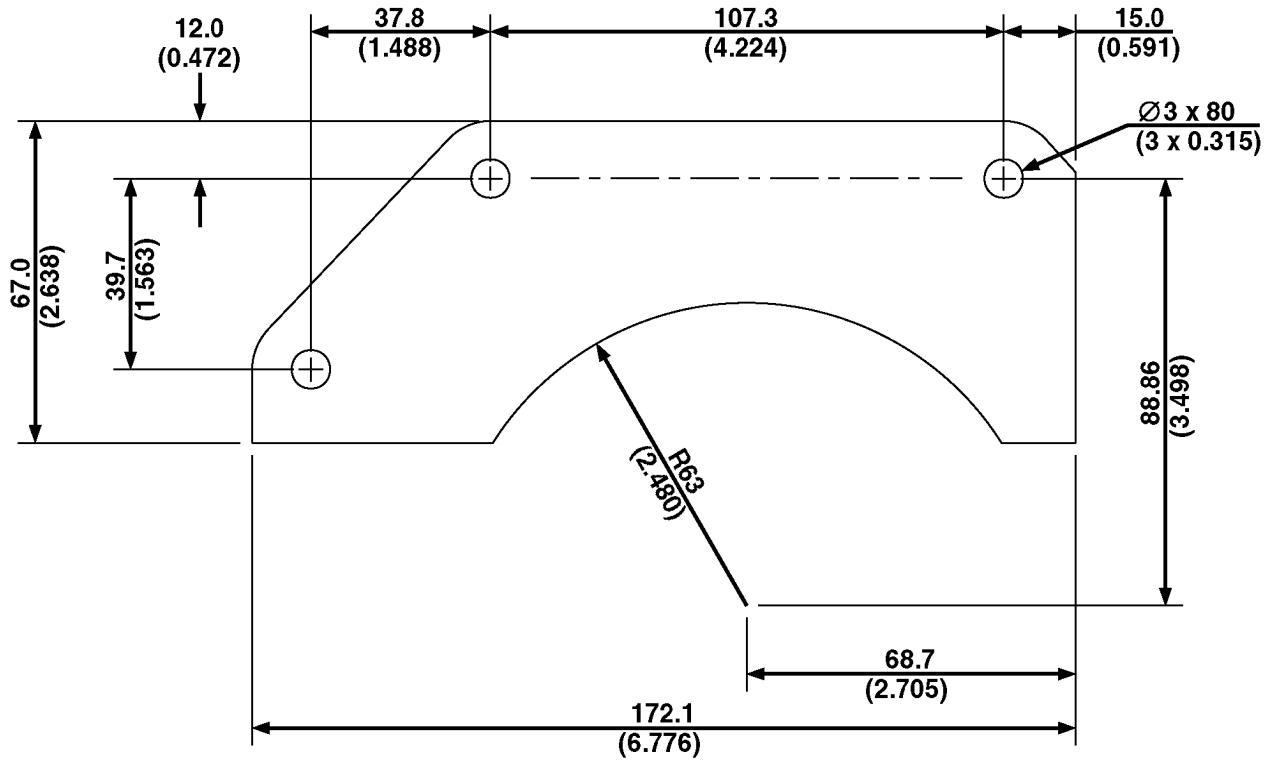

DFRG-5

Material—Aluminum

This template is used to transfer the injection pump timing mark from the engine's original front plate to the replacement front plate (which does not have the mark). Refer to Section 02, Group 050 for procedure to use this tool.

RG,199,JW7720 –19–25NOV97–1/1

Engine Oil Dipstick Tube Driver (6010—6910 Series Tractor Engines)

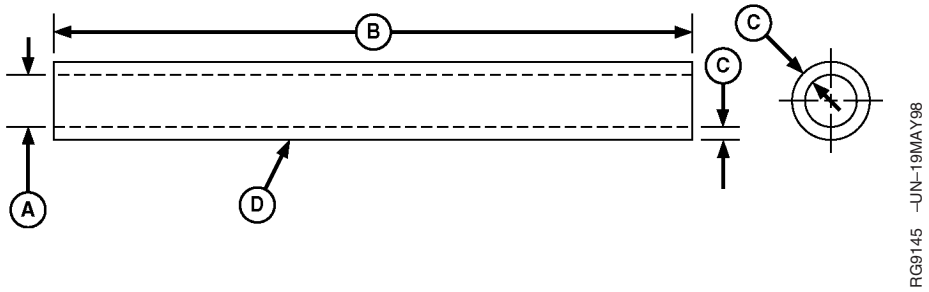

6010 Series Tractor Oil Dipstick Driver

A—Inside Diameter 9.75—10 mm (0.38—0.39 in.)

B—Length of Tubing 146 mm (5.75 in.)

C—Tubing Wall Thickness 3 mm (0.12 in.)

D—Steel Tubing 12.5 mm (0.50 in.)

This tool is required to install the straight engine oil dipstick tube in engine block on 6010—6910 Tractors.

For service procedure to use this tool, refer to Section 02, Group 060.

05
190
3

DPSG,OUO1004,132 –19–23MAY00–1/1

Section 06
Specifications

Contents

Page

Group 200—Repair and General OEM Specifications

Unified Inch Bolt and Screw Torque Values 06-200-1
Metric Bolt and Screw Torque Values 06-200-2
General OEM Engine Specifications 06-200-3
Engine Rebuild Specifications 06-200-5
Cylinder Head and Valves Specifications (Two-Valve Head) 06-200-6
Cylinder Head and Valves Specifications (Four-Valve Head) 06-200-10
Cylinder Block, Liners, Pistons, and Rods Specifications. 06-200-14
Crankshaft, Main Bearings, and Flywheel Specifications. 06-200-21
Camshaft, Balancer Shafts and Timing Gear Train Specifications 06-200-24
Lubrication System Specifications 06-200-30
Cooling System Specifications 06-200-33
Air Intake and Exhaust System Specifications. 06-200-37
Starting and Charging Systems Specifications. 06-200-38

Group 210—Diagnostic Specifications

Engine Diagnostic Specifications. 06-210-1
Dynamometer Test Specifications 06-210-1
Intake Manifold Pressure (Turbocharger Boost) Specifications 06-210-23
Intake Manifold Pressure (Turbocharger Boost) Specifications (Continued) 06-210-34
Effects of Altitude and Temperature on Engine Performance 06-210-65

Unified Inch Bolt and Screw Torque Values

TS1671 –UN–01MAY03

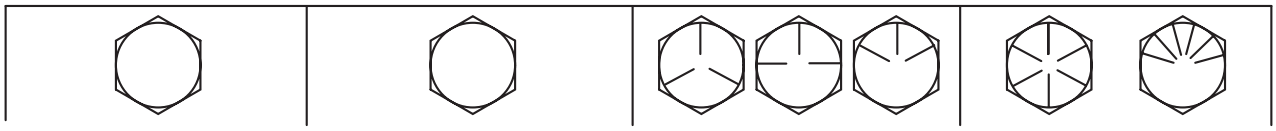

Bolt or	SAE Grade 1				SAE Grade 2[a]				SAE Grade 5, 5.1 or 5.2				SAE Grade 8 or 8.2			
Screw	Lubricated[b]		Dry[c]		Lubricated[b]		Dry[c]		Lubricated[b]		Dry[c]		Lubricated[b]		Dry[c]	
Size	N•m	lb-in	N•m	lb-in	N•m	lb-in	N•m	lb-in	N•m	lb-in	N•m	lb-in	N•m	lb-in	N•m	lb-in
1/4	3.7	33	4.7	42	6	53	7.5	66	9.5	84	12	106	13.5	120	17	150
													N•m	lb-ft	N•m	lb-ft
5/16	7.7	68	9.8	86	12	106	15.5	137	19.5	172	25	221	28	20.5	35	26
									N•m	lb-ft	N•m	lb-ft				
3/8	13.5	120	17.5	155	22	194	27	240	35	26	44	32.5	49	36	63	46
			N•m	lb-ft	N•m	lb-ft	N•m	lb-ft								
7/16	22	194	28	20.5	35	26	44	32.5	56	41	70	52	80	59	100	74
	N•m	lb-ft														
1/2	34	25	42	31	53	39	67	49	85	63	110	80	120	88	155	115
9/16	48	35.5	60	45	76	56	95	70	125	92	155	115	175	130	220	165
5/8	67	49	85	63	105	77	135	100	170	125	215	160	240	175	305	225
3/4	120	88	150	110	190	140	240	175	300	220	380	280	425	315	540	400
7/8	190	140	240	175	190	140	240	175	490	360	615	455	690	510	870	640
1	285	210	360	265	285	210	360	265	730	540	920	680	1030	760	1300	960
1-1/8	400	300	510	375	400	300	510	375	910	670	1150	850	1450	1075	1850	1350
1-1/4	570	420	725	535	570	420	725	535	1280	945	1630	1200	2050	1500	2600	1920
1-3/8	750	550	950	700	750	550	950	700	1700	1250	2140	1580	2700	2000	3400	2500
1-1/2	990	730	1250	930	990	730	1250	930	2250	1650	2850	2100	3600	2650	4550	3350

Torque values listed are for general use only, based on the strength of the bolt or screw. DO NOT use these values if a different torque value or tightening procedure is given for a specific application. For plastic insert or crimped steel type lock nuts, for stainless steel fasteners, or for nuts on U-bolts, see the tightening instructions for the specific application. Shear bolts are designed to fail under predetermined loads. Always replace shear bolts with identical grade.

Replace fasteners with the same or higher grade. If higher grade fasteners are used, tighten these to the strength of the original. Make sure fastener threads are clean and that you properly start thread engagement. When possible, lubricate plain or zinc plated fasteners other than lock nuts, wheel bolts or wheel nuts, unless different instructions are given for the specific application.

[a]Grade 2 applies for hex cap screws (not hex bolts) up to 6. in (152 mm) long. Grade 1 applies for hex cap screws over 6 in. (152 mm) long, and for all other types of bolts and screws of any length.

[b]"Lubricated" means coated with a lubricant such as engine oil, fasteners with phosphate and oil coatings, or 7/8 in. and larger fasteners with JDM F13C zinc flake coating.

[c]"Dry" means plain or zinc plated without any lubrication, or 1/4 to 3/4 in. fasteners with JDM F13B zinc flake coating.

DX,TORQ1 –19–24APR03–1/1

Metric Bolt and Screw Torque Values

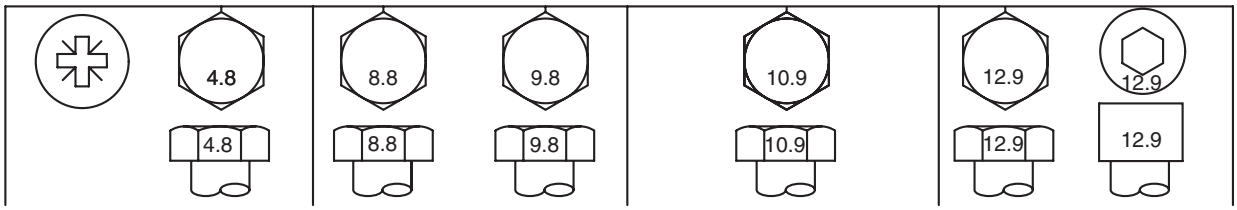

TS1670 –UN–01MAY03

Bolt or	Class 4.8				Class 8.8 or 9.8				Class 10.9				Class 12.9			
Screw	Lubricated[a]		Dry[b]		Lubricated[a]		Dry[b]		Lubricated[a]		Dry[b]		Lubricated[a]		Dry[b]	
Size	N•m	lb-in	N•m	lb-in	N•m	lb-in	N•m	lb-in	N•m	lb-in	N•m	lb-in	N•m	lb-in	N•m	lb-in
M6	4.7	42	6	53	8.9	79	11.3	100	13	115	16.5	146	15.5	137	19.5	172
									N•m	lb-ft	N•m	lb-ft	N•m	lb-ft	N•m	lb-ft
M8	11.5	102	14.5	128	22	194	27.5	243	32	23.5	40	29.5	37	27.5	47	35
			N•m	lb-ft	N•m	lb-ft	N•m	lb-ft								
M10	23	204	29	21	43	32	55	40	63	46	80	59	75	55	95	70
	N•m	lb-ft														
M12	40	29.5	50	37	75	55	95	70	110	80	140	105	130	95	165	120
M14	63	46	80	59	120	88	150	110	175	130	220	165	205	150	260	190
M16	100	74	125	92	190	140	240	175	275	200	350	255	320	235	400	300
M18	135	100	170	125	265	195	330	245	375	275	475	350	440	325	560	410
M20	190	140	245	180	375	275	475	350	530	390	675	500	625	460	790	580
M22	265	195	330	245	510	375	650	480	725	535	920	680	850	625	1080	800
M24	330	245	425	315	650	480	820	600	920	680	1150	850	1080	800	1350	1000
M27	490	360	625	460	950	700	1200	885	1350	1000	1700	1250	1580	1160	2000	1475
M30	660	490	850	625	1290	950	1630	1200	1850	1350	2300	1700	2140	1580	2700	2000
M33	900	665	1150	850	1750	1300	2200	1625	2500	1850	3150	2325	2900	2150	3700	2730
M36	1150	850	1450	1075	2250	1650	2850	2100	3200	2350	4050	3000	3750	2770	4750	3500

Torque values listed are for general use only, based on the strength of the bolt or screw. DO NOT use these values if a different torque value or tightening procedure is given for a specific application. For stainless steel fasteners or for nuts on U-bolts, see the tightening instructions for the specific application. Tighten plastic insert or crimped steel type lock nuts by turning the nut to the dry torque shown in the chart, unless different instructions are given for the specific application.

Shear bolts are designed to fail under predetermined loads. Always replace shear bolts with identical property class. Replace fasteners with the same or higher property class. If higher property class fasteners are used, tighten these to the strength of the original. Make sure fastener threads are clean and that you properly start thread engagement. When possible, lubricate plain or zinc plated fasteners other than lock nuts, wheel bolts or wheel nuts, unless different instructions are given for the specific application.

[a] "Lubricated" means coated with a lubricant such as engine oil, fasteners with phosphate and oil coatings, or M20 and larger fasteners with JDM F13C zinc flake coating.

[b] "Dry" means plain or zinc plated without any lubrication, or M6 to M18 fasteners with JDM F13B zinc flake coating.

06 200 2

DX,TORQ2 –19–24APR03–1/1

General OEM Engine Specifications

Tier I Engines

ITEM	ENGINE								
	4045DF150	4045TF150	4045TF250	4045HF150	6068DF150	6068TF150	6068TF250	6068HF150	6068HF250
Number of Cylinders	4	4	4	4	6	6	6	6	6
Bore	106 mm (4.19 in.)	106 mm (4.19 in.)	106 mm (4.19 in.)	106 mm (4.19 in.)	106 mm (4.19 in.)	106 mm (4.19 in.)	106 mm (4.19 in.)	106 mm (4.19 in.)	106 mm (4.19 in.)
Stroke	127 mm (5.0 in.)	127 mm (5.0 in.)	127 mm (5.0 in.)	127 mm (5.0 in.)	127 mm (5.0 in.)	127 mm (5.0 in.)	127 mm (5.0 in.)	127 mm (5.0 in.)	127 mm (5.0 in.)
Displacement	4.5 L (276 cu in.)	4.5 L (276 cu in.)	4.5 L (276 cu in.)	4.5 L (276 cu in.)	6.8 L (414 cu in.)	6.8 L (414 cu in.)	6.8 L (414 cu in.)	6.8 L (414 cu in.)	6.8 L (414 cu in.)
Compression	17.6:1	17.0:1	17.0:1	17.0:1	17.6:1	17.0:1	17.0:1	17.0:1	17.0:1
Max. Crank Pressure	0.5 kPa (2 H_2O)	0.5 kPa (2 H_2O)	0.5 kPa (2 H_2O)	0.5 kPa (2 H_2O)	0.5 kPa (2 H_2O)	0.5 kPa (2 H_2O)	0.5 kPa 2 H_2O)	0.5 kPa (2 H_2O)	0.5 kPa (2 H_2O)
Governor Regulation (Industrial)	7—10 %	7—10 %	7—10 %	7—10 %	7—10 %	7—10 %	7—10 %	7—10 %	7—10 %
Governor Regulation (Generator)	3—5 %	3—5 %	3—5 %	3—5 %	3—5 %	3—5 %	3—5 %	3—5 %	3—5 %
Oil Pressure Rated Speed	345 kPa (50 psi)	345 kPa (50 psi)	345 kPa (50 psi)	345 kPa (50 psi)	345 kPa (50 psi)	345 kPa (50 psi)	345 kPa (50 psi)	345 kPa (50 psi)	345 kPa (50 psi)
Oil Pressure Low Idle	105 kPa (15 psi)	105 kPa (15 psi)	105 kPa (15 psi)	105 kPa (15 psi)	105 kPa (15 psi)	105 kPa (15 psi)	105 kPa (15 psi)	105 kPa (15 psi)	105 kPa (15 psi)
Length	861.0 mm (33.9 in.)	861.0 mm (33.9 in.)	861.0 mm (33.9 in.)	861.0 mm (33.9 in.)	1117 mm (44.0 in.)	1117 mm (44.0 in.)	1117 mm (44.0 in.)	1116 mm (43.9 in.)	1141 mm (44.9 in.)
Width	598 mm (23.5 in.)	598 mm (23.5 in.)	598 mm (23.5 in.)	598 mm (23.5 in.)	598 mm (23.5 in.)	598 mm (23.5 in.)	598 mm (23.5 in.)	623 mm (24.5 in.)	623 mm (24.5 in.)
Height	854 mm (33.6 in.)	980 mm (38.6 in.)	980 mm (38.6 in.)	980 mm (38.6 in.)	956 mm (37.6 in.)	984 mm (38.7 in.)	984 mm (38.7 in.)	1009 mm (39.7 in.)	1009 mm (39.7 in.)
Weight	387 kg (851 lb)	396 kg (872 lb)	396 kg (872 lb)	396 kg (872 lb)	522 kg (1149 lb)	533 kg (1172 lb)	533 kg (1172 lb)	550 kg (1210 lb)	568 kg (1250 lb)

Continued on next page

Tier II Engines (Two-Valve Head Design)

ITEM	Engine			
	4045TF275	4045HF275	6068TF275	6068HF275
Number of Cylinders	4	4	6	6
Bore	106 mm (4.19 in.)	106 mm (4.19 in.)	106 mm (4.19 in.)	106 mm (4.19 in.)
Stroke	127 mm (5.0 in.)	127 mm (5.0 in.)	127 mm (5.0 in.)	127 mm (5.0 in.)
Displacement	4.5 L (276 cu in.)	4.5 L (276 cu in.)	6.8 L (414 cu in.)	6.8 L (414 cu in.)
Compression Ratio	17.0:1	17.0:1	17.0:1	17.0:1
Max. Crank Pressure	0.5 kPa (2 H_2O)	0.5 kPa (2 H_2O)	0.5 kPa (2 H_2O)	0.5 kPa (2 H_2O)
Governor Regulation (Industrial)	7—10 %	7—10 %	7—10 %	7—10 %
Governor Regulation (Generator)	3—5 %	3—5%	3—5%	3—5 %
Oil Pressure At Rated Speed, Full Load (minimum)	275 kPa (40 psi)	275 kPa (40 psi)	275 kPa (40 psi)	275 kPa (40 psi)
Oil Pressure At Low Idle (Minimum)	105 kPa (15 psi)	105 kPa (15 psi)	105 kPa (15 psi)	105 kPa (15 psi)
Length	860 mm (33.9 in.)	860 mm (33.9 in.)	1119 mm (43.9 in.)	1123 mm (44.2 in.)
Width	612 mm (24.1 in.)	612 mm (24.1 in.)	623 mm (24.5 in.)	623 mm (24.5 in.)
Height	994 mm (39.1 in.)	994 mm (39.1 in.)	1012 mm (39.9 in.)	1015 mm (40.0 in.)
Weight	451 kg (993 lb)	451 kg (993 lb)	587 kg (1290 lb)	587 kg (1290 lb)

Tier II Engines (Four-Valve Head Design)

ITEM	Engine	
	4045HF475	6068HF475
Number of Cylinders	4	6
Bore	106 mm (4.19 in.)	106 mm (4.19 in.)
Stroke	127 mm (5.0 in.)	127 mm (5.0 in.)
Displacement	4.5 L (276 cu in.)	6.8 L (414 cu in.)
Compression Ratio	17.0:1	17.0:1
Max. Crank Pressure	0.5 kPa (2 H_2O)	0.5 kPa (2 H_2O)
Governor Regulation (Industrial)	7—10 %	7—10 %
Governor Regulation (Generator)	3—5%	3—5 %
Oil Pressure At Rated Speed, Full Load (± 15 psi)	345 kPa (50 psi)	345 kPa (50 psi)
Oil Pressure At Low Idle (Minimum)	105 kPa (15 psi)	105 kPa (15 psi)
Length	860 mm (33.9 in.)	1123 mm (44.2 in.)
Width	612 mm (24.1 in.)	608 mm (23.9 in.)
Height	994 mm (39.1 in.)	1044 mm (41.1 in.)
Weight	451 kg (993 lb)	587 kg (1290 lb)

DPSG,OUO1004,102 –19–04FEB04–2/2

Engine Rebuild Specifications

Item	Measurement	Specification
D05226ST Special Adapter-to-Mounting Hub SAE Grade 8 Socket Head Cap Screws	Torque	600 N•m (450 lb-ft).
62835[1]Engine Adapter-to-Special Adapter SAE Grade 8 Cap Screws	Torque	135 N•m (100 lb-ft).
Engine Lift Strap Cap Screws	Torque	170 N•m (125 lb-ft)
Engine Repair Stand M12 Cap Screws	Torque	140 N•m (105 lb-ft)
Engine Repair Stand M14 Cap Screws	Torque	225 N•m (165 lb-ft)

[1]Part of JT07268 Engine Repair Stand Adapter Kit

DPSG,OUO1004,2706 –19–07NOV03–1/1

Cylinder Head and Valves Specifications (Two-Valve Head)

Item	Measurement	Specification
Intake Valve Clearance Checking (Rocker Arm-to-Valve Tip) (Engine Cold)	Clearance	0.31—0.38 mm (0.012—0.015 in.)
Exhaust Valve Clearance Checking (Rocker Arm-to-Valve Tip) (Engine Cold)	Clearance	0.41—0.48 mm (0.016—0.019 in.)
Rocker Arm Adjusting Screw Jam Nut	Torque	27 N•m (20 lb-ft)
Intake Valves	Lift	11.77—12.21 mm (0.463—0.481 in.)
	Wear Limit	11.34 mm (0.447 in.)
Exhaust Valves	Lift	11.51—11.94 mm (0.453—0.470 in.)
	Wear Limit	11.08 mm (0.436 in.)
Rocker Arm Assembly		
46 mm (1.81 in.) Compressed Height	Spring Tension	18—27 N (4—6 lb-force)
Spring	Compressed Height	46 mm @ 18—27 N (1.81 in. @ 4—6 lb-force)
Shaft	OD	19.99—20.02 mm (0.787—0.788 in.)
	Wear Limit	19.94 mm (0.785 in.)
Shaft Support	Maximum ID	20.17 mm (0.794 in.)
Bore	ID	20.07—20.12 mm (0.790—0.792 in.)
	Wear Limit	20.17 mm (0.794 in.)
Fuel Supply Pump Push Rod	OD	9.891—9.917 mm (0.3894—0.3904 in.)
Fuel Supply Pump Push Rod Bore in Block	ID	10.00—10.05 mm (0.3937—0.3957 in.)

Continued on next page

Item	Measurement	Specification
Camshaft Follower	OD	31.61—31.64 mm (1.245—1.246 in.)
Intake Valves	Recess in Cylinder Head	0.61—1.11 mm (0.024—0.044 in.)
	Wear Limit	1.63 mm (0.064 in.)
Exhaust Valve	Recess in Cylinder Head	1.22—1.72 mm (0.048—0.068 in.)
	Wear Limit	2.26 mm (0.089 in.)
Valve Springs		
Spring Free Length 0 N (0 lb-force)[1]	Height	54.0 mm (2.125 in.)
Spring Compressed 240—280 N (54—62 lb-force)	Height	46.0 mm (1.81 in.)
Spring Compressed 590—680 N (133—153 lb-force)	Height	34.5 mm (1.36 in.)
Intake Valve Head	OD	46.47—46.73 mm (1.830—1.840 in.)
Exhaust Valve Head	OD	42.37—42.63 mm (1.668—1.678 in.)
Intake Valve Stem	OD	7.864—7.884 mm (0.3096—0.3104 in.)
Exhaust Valve Stem	OD	7.848—7.874 mm (0.3090—0.3100 in.)
Valve Face	Maximum Runout (Intake and Exhaust)	0.038 mm (0.0015 in.)
Valves	Face Angle	29.25° ± 0.25°

[1] Free length may vary slightly between valve springs.

Continued on next page

Item	Measurement	Specification
Cylinder Head Flatness	Maximum Acceptable Out-of-Flat for Entire Length or Width	0.08 mm (0.003 in.)
	Maximum Acceptable Out-of-Flat for Every 150 mm [5.90 in.]	0.03 mm (0.001 in.)
New Cylinder Head	Thickness	104.87—105.13 mm (4.129—4.139 in.)
	Minimum Acceptable Thickness	104.24 mm (4.104 in.)
	Combustion Face Surface Finish (Surface Grind Only) (AA)	0.7—3.2 micrometers (31—125 micro-in.)
	Maximum Wave Depth	0.012 mm (0.0005 in.)
	Maximum Material Removal for Resurfacing	0.76 mm (0.030 in.)
Valve Guide Bore (New)	ID	7.912—7.938 mm (0.312—0.313 in.)
Valve Guide-to-Valve Stem (New)	Clearance	0.05—0.10 mm (0.002—0.004 in.)
	Wear Limit	0.15 mm (0.006 in.)
Valve Seat Grinding	Seat Angle	30°
	Valve Seat Width	1.50—2.00 mm (0.059—0.079 in.)
	Maximum Valve Seat Runout	0.08 mm (0.003 in.)
Cylinder Liner	Height above Block	0.030—0.100 mm (0.001—0.004 in.)
	Maximum Permissible Height Difference at Nearest Point of Two Adjacent Liners, or Within a Single Liner	0.05 mm (0.002 in.)
Cylinder Head Cap Screws		
Step 1—Initial	Torque	100 N•m (75 lb-ft)
Step 2—Second	Torque	150 N•m (110 lb-ft)
Step 3—Verify (After 5 Minutes)	Torque	150 N•m (110 lb-ft)
Step 4—Final	Torque-Turn	Tighten each screw an additional 60° ± 10°

Continued on next page

Item	Measurement	Specification
Rocker Arm Support Studs	Torque	60 N•m (44 lb-ft)
Rocker Arm Cover Nuts (Two-Valve Head)	Torque	35 N•m (26 lb-ft)

DPSG,OUO1004,2710 –19–07NOV03–4/4

Cylinder Head and Valves Specifications (Four-Valve Head)

Item	Measurement	Specification
Intake Valve Clearance Adjustment (Rocker Arm-to-Bridge) (Engine Cold)	Clearance	0.36 mm (0.014 in.)
Exhaust Valve Clearance Adjustment (Rocker Arm-to-Bridge) (Engine Cold)	Clearance	0.46 mm (0.018 in.)
Rocker Arm Adjusting Screw Jam Nut	Torque	27 N•m (20 lb-ft)
Intake Valves	Lift	9.03—9.43 mm (0.356—0.371 in.)
	Wear Limit	8.70 mm (0.343 in.)
Exhaust Valves	Lift	9.32—9.72 mm (0.367—0.383 in.)
	Wear Limit	9.00 mm (0.354 in.)
Valve Bridge	Pocket-to-Pocket Variation (Maximum)	0.1 mm (0.004 in.)
Rocker Arm Assembly		
46 mm (1.81 in.) Compressed Height	Spring Tension	18—27 N (4—6 lb-force)
Spring	Compressed Height	46 mm @ 18—27 N (1.81 in. @ 4—6 lb-force)
Shaft	OD	19.962—20.038 mm (0.786—0.789 in.)
	Wear Limit	19.91 mm (0.784 in.)
Rocker Arm Bore	ID	20.065—20.115 mm (0.790—0.792 in.)
	Wear Limit	20.16 mm (0.794 in.)
Fuel Supply Pump Push Rod	OD	9.891—9.917 mm (0.3894—0.3904 in.)

06 200 10

Continued on next page

Item	Measurement	Specification
Fuel Supply Pump Push Rod Bore in Block	ID	10.00—10.05 mm (0.3937—0.3957 in.)
Camshaft Follower	OD	31.61—31.64 mm (1.245—1.246 in.)
Intake Valves	Recess in Cylinder Head	0.77—1.27 mm (0.030—0.050 in.)
	Wear Limit	1.77 mm (0.070 in.)
Exhaust Valve	Recess in Cylinder Head	0.81—1.31 mm (0.032—0.052 in.)
	Wear Limit	1.81 mm (0.071 in.)
Intake and Exhaust Valves	Maximum Variation for a Pair of Valves (Per Cylinder)	0.3 mm (0.012 in.)
Valve Springs		
Spring Free Length 0 N (0 lb-force)[1]	Height	46.15 mm (1.82 in.)
Spring Compressed 166 N (37.32 lb-force)	Height	37.21 mm (1.46 in.)
Spring Compressed 356 N (80.03 lb-force)	Height	27.01 mm (1.06 in.)
Intake Valve Head	OD	36.87—37.13 mm (1.452—1.462 in.)
Exhaust Valve Head	OD	35.87—36.13 mm (1.412—1.422 in.)
Intake Valve Stem	OD	6.987—7.013 mm (0.2750—0.2761 in.)
Exhaust Valve Stem	OD	6.984—7.000 mm (0.2749—0.2756 in.)
Valve Face	Maximum Runout (Intake and Exhaust)	0.038 mm (0.0015 in.)

[1]Free length may vary slightly between valve springs.

Continued on next page

Item	Measurement	Specification
Cylinder Head Flatness	Maximum Acceptable Out-of-Flat for Entire Length or Width	0.08 mm (0.003 in.)
	Maximum Acceptable Out-of-Flat for Every 150 mm (5.90 in.)	0.03 mm (0.001 in.)
New Cylinder Head	Thickness	104.87—105.13 mm (4.129—4.139 in.)
	Minimum Acceptable Thickness	104.24 mm (4.104 in.)
	Combustion Face Surface Finish (Surface Grind Only) (AA)	0.7—3.2 micrometers (31—125 micro-in.)
	Maximum Wave Depth	0.012 mm (0.0005 in.)
	Maximum Material Removal for Resurfacing	0.76 mm (0.030 in.)
Valve Guide Bore (New)	ID	7.025—7.051 mm (0.276—0.277 in.)
Intake Valve Guide-to-Valve Stem (New)	Clearance	0.012—0.064 mm (0.0005—0.0025 in.)
Exhaust Valve Guide-to-Valve Stem (New)	Clearance	0.025—0.077 mm (0.0010—0.0030 in.)
Intake and Exhaust Valve Guide-to-Valve Stem (Wear Limit)	Clearance	0.15 mm (0.0059 in.)
Cylinder Liner	Height above Block	0.030—0.100 mm (0.001—0.004 in.)
	Maximum Permissible Height Difference at Nearest Point of Two Adjacent Liners, or Within a Single Liner	0.05 mm (0.002 in.)
Cylinder Head Cap Screws		
Step 1—Initial	Torque	100 N•m (75 lb-ft)
Step 2—Second	Torque	150 N•m (110 lb-ft)
Step 3—Verify (After 5 Minutes)	Torque	150 N•m (110 lb-ft)
Step 4—Final	Torque-Turn	Tighten each screw an additional 60° ± 10°. (See TORQUE-TURN METHOD FOR PROPER TORQUE in this group.)

Continued on next page

Item	Measurement	Specification
Glow Plug	Torque	15 N•m (133 lb-in.)
Rocker Arm Carrier Screws	Torque	60 N•m (44 lb-ft)
Rocker Arm Shaft End Clamps	Torque	30 N•m (22 lb-ft)
Rocker Arm Shaft Clamps	Torque	60 N•m (44 lb-ft)
Rocker Arm Cover Cap Screws (Four-Valve Head)	Torque	7 N•m (62 lb-in.)
Glow Plug Harness Rail Screws	Torque	11 N•m (97 lb-in.)
Heat Shield-to-Cylinder Head Screws	Torque	60 N•m (44 lb-ft)
Heat Shield-to-Rocker Arm Cover Screws	Torque	10 N•m (88 lb-in.)

Exhaust Valve Seat Insert Bore Specifications:

A	36.436—36.462 mm (1.4344—1.4355 in.)
B	2.34 mm (0.092 in.) Reference
C	8.715—8.785 mm (0.3431—0.3458 in.)
D	38—42°
E	Maximum Radius 0.5 mm (0.019 in.)
Maximum surface finish of bore “A”	3.2 mm (0.1259 in.) Inspection Reference

Intake Valve Seat Insert Bore Specifications:

A	37.436—37.462 mm (1.4738—1.4748 in.)
B	2.8 mm (0.110 in.) Reference
C	9.215—9.285 mm (0.3627—0.3655 in.)
D	38—42°
E	Maximum Radius 0.5 mm (0.019 in.)
Maximum surface finish of bore “A”	3.2 mm (0.1259 in.) Inspection Reference

Replacement Valve Seat Insert OD:

Intake	37.487—37.513 mm (1.476—1.477 in.)
Exhaust	36.487—36.513 mm (1.436—1.437 in.)

OUO1089,000023E –19–10DEC03–4/4

Cylinder Block, Liners, Pistons, and Rods Specifications

Item	Measurement	Specification
Piston Rings—4045DF, TF150 and 6068DF, TF150 Engines		
No. 1 Compression	End Gap	0.33—0.58 mm (0.013—0.023 in.)
No. 2 Compression	End Gap	1.24—1.49 mm (0.049—0.059 in.)
No. 3 Oil Control	End Gap	0.30—0.56 mm (0.011—0.022 in.)
Piston Rings—4045TF250 and 6068TF250 Engines		
No. 1 Compression	End Gap	0.33—0.64 mm (0.013—0.025 in.)
No. 2 Compression	End Gap	0.75—1.00 mm (0.030—0.039 in.)
No. 3 Oil Control	End Gap	0.33—0.64 mm (0.013—0.025 in.)
Heavy Duty Piston Rings		
No. 1 Compression	End Gap	0.33—0.59 mm (0.013—0.023 in.)
No. 2 Compression	End Gap	0.89—1.14 mm (0.035—0.049 in.)
No. 3 Oil Control	End Gap	0.33—0.59 mm (0.013—0.023 in.)
Cylinder Liner	Height above Block	0.030—0.100 mm (0.001—0.004 in.)
	Maximum Permissible Difference between Readings within One Cylinder or between Adjacent Cylinders	0.05 mm (0.002 in.)
Cylinder Liner	Thickness	6.23—6.89 mm (0.25—0.27 in.)
Cylinder Liner Packing Step	Dimension	2.02—2.29 mm (0.08—0.09 in.)

Continued on next page

Item	Measurement	Specification
Piston Ring-to-Groove Clearance—New Piston Ring (Second Compression Ring Groove)	Maximum Clearance	0.20 mm (0.008 in.)
Piston Ring-to-Groove Clearance—New Piston Ring (Third Oil Control Ring Groove, Standard Ring)	Maximum Clearance	0.82 mm (0.032 in.)
Piston Ring-to-Groove Clearance—New Piston Ring (Third Oil Control Ring Groove, Heavy Duty Ring)	Maximum Clearance	0.15 mm (0.006 in.)
Piston Pin Bore (Small Pin)	ID	34.935—34.945 mm (1.3754—1.3758 in.)
Piston Pin Bore (Large Pin)	ID	41.285—41.295 mm (1.6254—1.6258 in.)
Piston Skirt (Measurement Taken at Bottom of Skirt 28 mm [1.1 in.] from Bottom of Piston)	Diameter	106.38—106.40 mm (4.188—4.189 in.)
Piston (Two Valve Head Engines)		
Piston	Height (Measured from Center of Pin Bore to Top of Piston)	71.64—71.70 mm (2.820—2.823 in.)
Piston (Four Valve Head Engines)		
Piston	Height (Measured from Center of Pin Bore to Top of Piston)	71.60—71.65 mm (2.819—2.820 in.)
Piston Skirt	OD 28 mm (1.1 in.) from Bottom of Piston	106.38—106.40 mm (4.188—4.189 in.)
Cylinder Liner	ID	106.48—106.52 mm (4.192—4.194 in.)
Cylinder Liner (Top or Bottom)	Maximum Out-of-Round	0.05 mm (0.002 in.)
Cylinder Liner	Maximum Taper	0.05 mm (0.002 in.)
Piston-to-Liner Clearance (Measured at Bottom of Piston Skirt) (Naturally Aspirated Engines)	Clearance	0.08—0.14 mm (0.003—0.005 in.)

Continued on next page

Item	Measurement	Specification
Piston-to-Liner Clearance (Measured at Bottom of Piston Skirt) (Turbocharged Engines)	Clearance	0.08—0.15 mm (0.003—0.006 in.)
Crankshaft Journal	OD	77.800—77.826 mm (3.0629—3.0640 in.)
Assembled Rod Bearing	ID	77.876—77.927 mm (3.0659—3.0679 in.)
Connecting Rod Bearing-to-Journal (New Parts)	Oil Clearance	0.050—0.127 mm (0.0020—0.0050 in.)
	Wear Limit	0.152 mm (0.0600 in.)
Connecting Rod Bore (Without Bearing Inserts)	ID	82.677—82.703 mm (3.2550—3.2560 in.)
Connecting Rod Bore	Maximum Permissible Out-of-Round	0.038 mm (0.0015 in.)
Piston Pin (Small)	OD	34.920—34.930 mm (1.3748—1.3752 in.)
	Wear Limit	34.907 mm (1.3743 in.)
Piston Pin (Large)	OD	41.270—41.280 mm (1.6248—1.6252 in.)
	Wear Limit	41.257 mm (1.6243 in.)
Piston Pin	Length	71.51—72.11 mm (2.815—2.839 in.)
Piston Pin Bushing Installed (Small Pin)	ID	34.950—34.976 mm (1.3760—1.3770 in.)
	Wear Limit	35.026 mm (1.3790 in.)
Piston Pin Bushing Installed (Large Pin)	ID	41.300—41.326 mm (1.6260—1.6270 in.)
	Wear Limit	41.376 mm (1.6290 in.)
Piston Pin-to-Bushing	Oil Clearance	0.020—0.056 mm (0.0008—0.0022 in.)
	Wear Limit	0.102 mm (0.0040 in.)
Connecting Rod Small Pin Bore (Bushing Removed)	ID	38.087—38.113 mm (1.4995—1.5005 in.)

Continued on next page

Item	Measurement	Specification
Connecting Rod Large Pin Bore (Bushing Removed)	ID	46.025—46.051 mm (1.8120—1.8130 in.)
Connecting Rod Pin-to-Bushing (Tapered Pin-End)	Oil Clearance	0.020—0.056 mm (0.0008—0.0022 in.)
Connecting Rod Pin-to-Bushing (Straight Pin-End)	Oil Clearance	0.020—0.056 mm (0.0008—0.0022 in.)
	Wear Limit	0.102 mm (0.0040 in.)
Rod Bearing Bore-to-Piston Pin Bushing Bore (Center-to-Center)	Measurement	202.95—203.05 mm (7.990—7.994 in.)
Cylinder Block Oil and Coolant Gallery Plugs		
1/2 in. Plug (W/O Turbocharger, Return Port)	Torque	45 N•m (33 lb-ft)
1/4 in. Plug (Coolant Gallery)	Torque	17 N•m (150 lb-in.)
1/8 in. Plug (Oil Gallery)	Torque	17 N•m (150 lb-in.)
3/8 in. Plug (Oil Gallery)	Torque	45 N•m (33 lb-ft)
1-5/8 in. Steel Plug (Coolant Gallery)[1]	Torque	60 N•M (44 lb-ft)
1-5/8 in. Composite Plug (Coolant Gallery)[2]	Torque	30 N•m (22 lb-ft)
1-5/8 in. Steel Square Socket Head Plug (Coolant Gallery)	Torque	35 N•m (26 lb-ft)
Cylinder Block Main Bearing Bore	ID	84.455—84.481 mm (3.3250—3.3260 in.)
Camshaft Follower Bore in Block	ID	31.70—31.75 mm (1.248—1.250 in.)

[1] *(Saran "CD" engines —540458)*

[2] *(Saran "CD" engines 540459—)*

Continued on next page

Item	Measurement	Specification
Camshaft Follower (New)	OD	31.61—31.64 mm (1.245—1.246 in.)
Camshaft Follower-to-Bore	Clearance	0.06—0.13 mm (0.002—0.005 in.)
Camshaft Bore in Block, Front No. 1 (Without Bushing)	ID	59.961—59.987 mm (2.3607—2.3617 in.)
Camshaft Bore in Block, Front No. 1 (With Bushing)	ID	55.961—55.987 mm (2.2031—2.2042 in.)
Camshaft Bore in Block (All Except No. 1)	ID	55.986—56.012 mm (2.2042—2.2052 in.)
Camshaft Journal-to-Bushing (No. 1 Bore With Bushing)	Oil Clearance	0.063—0.115 mm (0.0025—0.0045 in.)
Camshaft Journal-to-Bushing (All Except No. 1)	Oil Clearance	0.088—0.140 mm (0.0035—0.0055 in.)
Balancer Shaft Bore in Block (Bushing Removed)	ID	43.262—43.288 mm (1.7032—1.7042 in.)
Balancer Shaft Bushing	ID	40.177—40.237 mm (1.5818—1.5841 in.)
Balancer Shaft Journal-to-Bushing	Clearance	0.016—0.102 mm (0.0006—0.0040 in.)
Lower Block Bore for Seating Liner	ID	115.75—115.80 mm (4.557—4.559 in.)
Upper Block Bore for Seating Liner	ID	120.70—120.75 mm (4.752—4.754 in.)
Liner Flange in Block	ID	126.33—126.35 mm (4.973—4.974 in.)
Liner at Upper Bore	OD	120.61—120.69 mm (4.7484—4.7516 in.)
Liner-to-Cylinder Block	Clearance at Lower Bore	0.035—0.100 mm (0.001—0.004 in.)

Continued on next page

Item	Measurement	Specification
Liner-to-Cylinder Block	Clearance at Upper Bore	0.10—0.14 mm (0.004—0.005 in.)
Cylinder Liner	ID	106.48—106.52 mm (4.192—4.194 in.)
Cylinder	Maximum Wear	0.10 mm (0.004 in.)
Cylinder	Maximum Taper	0.05 mm (0.002 in.)
Cylinder	Maximum Out-of-Round	0.05 mm (0.002 in.)
Cylinder Liner Flange Counterbore	Depth in Block	5.952—5.988 mm (0.2343—0.2357 in.)
Cylinder Liner Flange	Thickness	6.022—6.058 mm (0.2371—0.2385 in.)
Cylinder Block Top Deck		
Maximum Acceptable Out-of-Flat, Entire Length or Width (Used)	Measurement	0.08 mm (0.003 in.)
Maximum Acceptable Out-of-Flat (Any 150 mm [5.90 in.] Length)	Measurement	0.025 mm (0.001 in.)
Top Deck (Surface Grind Only) (AA)	Surface Finish	0.8—3.2 micrometers (32—125 micro-in.)
Top Deck Surface Finish	Maximum Wave Depth	0.012 mm (0.0005 in.)
Main Bearing Bore Centerline-to-Cylinder Block Top Deck	Distance	337.896—337.972 mm (13.3029—13.3059 in.)
Piston Cooling Orifice Jet	Diameter	1.4 mm (0.055 in.)
Piston Cooling Orifice	Torque	11 ± 1.5 N•m (96 ± 13 lb-in.)
Push Rod	OD	9.891—9.917 mm (0.3894—0.3904 in.)
Push Rod Bore in Block	ID	10.00—10.05 mm (0.3937—0.3957 in.)

Continued on next page

Item	Measurement	Specification
Cylinder Liner	Height above Block	0.030—0.100 mm (0.001—0.004 in.)
	Maximum Permissible Height Difference at Nearest Point of Two Adjacent Liners, or Within a Single Liner	0.05 mm (0.002 in.)
Connecting Rod Cap Screws	Initial Torque	58 N•m (43 lb-ft)
Connecting Rod Cap Screws	Torque-Turn	1/4 Turn (90—100°) After Initial Torque
Piston Protrusion		
4-Cyl. Standard Duty Codes 4801, 4803, 4809. 6-Cyl. Standard Duty Codes 4805, 4807.	Piston Protrusion	0.07—0.25 mm (0.003—0.010 in.)
4-Cyl. Heavy Duty Code 4804. 6-Cyl. Heavy Duty Codes 4808, 4810 and All Four-Valve Head Engines.	Piston Protrusion	0.07—0.25 mm (0.003—0.010 in.)

DPSG,OUO1004,2714 –19–18JUN02–7/7

Crankshaft, Main Bearings, and Flywheel Specifications

Item	Measurement	Specification
Damper	Maximum Radial Runout (Concentricity)	1.50 mm (0.060 in.)
Damper Pulley Outer Ring	Wobble (Maximum)	1.50 mm (0.060 in.)
Damper Pulley Inner Ring	Wobble (Maximum)	0.5 mm (0.020 in.)
Crankshaft Damper Pulley Cap Screws—Straight Nose Crankshaft		
Outer Cap Screw Initial Tightening	Torque	20 N•m (177 lb-in.)
Four Cap Screw Mounted Damper Final (Dry)	Torque	63 N•m (48 lb-ft)
Five Cap Screw Mounted Damper (4 Outer Cap Screws) Final (Lubricated)	Torque	80 N•m (60 lb-ft)
Five Cap Screw Mounted Damper (Center Cap Screw-Lubricated)	Torque	150 N•m (111 lb-ft)
Center Damper Mounting Cap Screw (Tapered Nose Crankshaft)	Torque	500 N•m (369 lb-ft)
Secondary Vibration Damper-to-Main Vibration Damper or Auxiliary Pulley-to-Vibration Damper Cap Screws	Torque	70 N•m (52 lb-ft)
Crankshaft	End Play	0.029—0.357 mm (0.001—0.014 in.)
Flywheel Face Flatness	Maximum Variation Maximum Variation per 25 mm (1.0 in.) of Travel	0.23 mm (0.009 in.) 0.013 mm (0.0005 in.)
Flywheel Bearing Bore Concentricity	Maximum Variation	0.127 mm (0.005 in.)
Flywheel Pilot Bearing Bore (Option Code 1508)	ID	34.978—35.004 mm (1.3770—1.3781 in.)

Continued on next page

Item	Measurement	Specification
Flywheel Pilot Bearing Bore (Option Code 1502 and 1515)	ID	44.978—45.004 mm (1.7708—1.7719 in.)
Flywheel Pilot Sleeve Bore (Option Code 1573)	ID	54.978—55.004 mm (2.1645—2.1655 in.)
Flywheel Sleeve (Option Code 1573)	OD	55.054—55.004 mm (2.1675—2.1655 in.)
Sleeve Bore (Option Code 1573)	ID	39.998—40.024 mm (1.5747—1.5757 in.)
Flywheel Mounting Cap Screws (Dry)	Torque	138 N•m (102 lb-ft)
Flywheel Mounting Cap Screws (Lubricated)	Torque	110 N•m (81 lb-ft)
Seal Housing-to-Cylinder Block Cap Screw	Torque	27 Nm (20 lb-ft)
Crankshaft Main Bearing-to-Journal	Oil Clearance	0.041—0.109 mm (0.0016—0.0043 in.)
Crankshaft Main Bearing	ID	79.391—79.433 mm (3.1256—3.1273 in.)
Crankshaft Main Journal	OD	79.324—79.350 mm (3.1229—3.1240 in.)
Crankshaft Rod Journal	OD	77.800—77.826 mm (3.0629—3.0640 in.)
Crankshaft Main or Rod Journal	Maximum Taper	0.010 mm (0.0004 in.)
Crankshaft Main or Rod Journal	Maximum Out-of-Round	0.005 mm (0.0002 in.)
Crankshaft Main Thrust Bearing Journal (New)	Width	38.952—39.028 mm (1.5335—1.5365 in.)
Crankshaft Main Thrust Bearing	Overall Width	38.79—38.87 mm (1.527—1.530 in.)
Crankshaft Main Bearing Bore (Without Bearings)	ID	84.455—84.481 mm (3.3250—3.3260 in.)
Crankshaft Main Bearing Bore Centerline-to-Top Deck	Distance	337.896—337.972 mm (13.3029—13.3059 in.)

Continued on next page

Item	Measurement	Specification
Piston Cooling Orifice	Diameter	1.4 mm (0.055 in.)
Piston Cooling Orifice	Torque	11 N•m (97 lb-in.) (96 lb-in.)
Crankshaft Main Bearing Cap Screws	Torque	135 N•m (100 lb-ft)
Crankshaft Rear Main (Thrust) Bearing Cap Screws	Torque	135 N•m (100 lb-ft)
Flywheel Housing Cap Screws	Torque	125 N•m (92 lb-ft)
3210, 3310 and 3410 Tractor		
Flywheel Housing Cap Screws (1—8)	Torque	110 N•m (81 lb-ft)
Flywheel Housing Cap Screws (9 and 12)	Torque	130 N•m (96 lb-ft)
Flywheel Housing Cap Screws (13 and 14)	Torque	280 N•m (206 lb-ft)
Flywheel Housing Cap Screws (10 and 11)	Torque	530 N•m (391 lb-ft)
Flywheel Housing Seal Bore	Maximum Permissible Runout (Concentricity)	0.152 mm (0.006 in.)

DPSG,OUO1004,2718 –19–23JAN04–3/3

Camshaft, Balancer Shafts and Timing Gear Train Specifications

Item	Measurement	Specification
Intake Valves (Two-Valve Head Engines)	Valve Lift [at 0.00 mm (0.00 in.) Valve Clearance] Wear Limit	11.77—12.21 mm (0.463—0.481 in.) 11.34 mm (0.447 in.)
Intake Valves (Four-Valve Head Engines)	Valve Lift [at 0.00 mm (0.00 in.) Valve Clearance] Wear Limit	9.03—9.43 mm (0.356—0.371 in.) 8.7 mm (0.343 in.)
Exhaust Valves (Two-Valve Head Engines)	Valve Lift [at 0.00 mm (0.00 in.) Valve Clearance] Wear Limit	11.51—11.94 mm (0.453—0.470 in.) 11.08 mm (0.436 in.)
Exhaust Valves (Four-Valve Head Engines)	Valve Lift [at 0.00 mm (0.00 in.) Valve Clearance] Wear Limit	9.32—9.72 mm (0.367—0.383 in.) 9.00 mm (0.354 in.)
Auxiliary Drive-to-Cylinder Block Plate	Torque	95 N•m (70 lb-ft)
Auxiliary Drive Cover Plate	Torque	55 N•m (41 lb-ft)
Camshaft	End Play	0.08—0.23 mm (0.003—0.009 in.)
Balancer Shaft	End Play	0.05—0.26 mm (0.002—0.010 in.)
Upper Idler Gear	End Play	0.070—0.170 mm (0.0027—0.0066 in.)
Lower Idler Gear	End Play	0.070—0.330 mm (0.0027—0.0129 in.)
Timing Gear Backlash Specifications		
Camshaft-to-Upper Idler (A) (Two-Valve Head Engine with Gear Identified as R120635)	Backlash	0.04—0.2 mm (0.0015—0.008 in.)
Camshaft-to-Upper Idler (A) (Two-Valve Head Engine with Gear Identified as R505121)	Backlash	0.04 mm (0.0015 in.) Minimum
Camshaft-to-Upper Idler (A) (Four-Valve Head Engine)	Backlash	0.03—0.64 mm (0.0011—0.0254 in.)

Continued on next page

Item	Measurement	Specification
Injection Pump-to-Upper Idler (B) (Two-Valve Head Engine with Gear Identified as R120635)	Backlash	0.04—0.2 mm (0.0015—0.008 in.)
Injection Pump-to-Upper Idler (B) (Two-Valve Head Engine with Gear Identified as R505121)	Backlash	0.04 mm (0.0015 in.) Minimum
Injection Pump-to-Upper Idler (B) (Four-Valve Head Engine)	Backlash	0.09—0.55 mm (0.0034—0.0218 in.)
Upper Idler-to-Crankshaft (C) (Two-Valve Head Engine with Gear Identified as R120635)	Backlash	0.04—0.2 mm (0.0015—0.008 in.)
Upper Idler-to-Crankshaft (C) (Two-Valve Head Engine with Gear Identified as R505121)	Backlash	0.04 mm (0.0015 in.) Minimum
Crankshaft-to-Lower Idler (D)	Backlash	0.07—0.60 mm (0.0027—0.0236 in.)
Oil Pump-to-Lower Idler (E)	Backlash	0.08—0.60 mm (0.0031—0.0236 in.)
Balancer Shaft-to-Oil Pump (4-Cyl. Only) (F)	Backlash	0.06—0.65 mm (0.0025—0.0255 in.)
Lower Idler-to-Balancer Shaft (4-Cyl. Only) (G)	Backlash	0.07—0.65 mm (0.0027—0.0255 in.)
Camshaft-to-Auxiliary Drive (Not Shown)	Backlash	0.05—0.68 mm (0.0021—0.0266 in.)
Camshaft Thrust Plate	Clearance	0.08—0.23 mm (0.003—0.009 in.)
Camshaft Thrust Plate	Thickness	3.96—4.01 mm (0.156—0.158 in.)
Camshaft Bearing Bores and Journals		
Camshaft Journal	OD	55.872—55.898 mm (2.1997—2.2007 in.)

Continued on next page

Item	Measurement	Specification
Camshaft Bore, Front No. 1 in Block (Without Bushing)	ID	59.961—59.987 mm (2.3607—2.3617 in.)
Camshaft Bore, Front No. 1 in Block (With Bushing)	ID	55.961—55.987 mm (2.2031—2.2042 in.)
Camshaft Bore, All Except No. 1	ID	55.986—56.012 mm (2.2042—2.2052 in.)
Camshaft Journal-to-Bushing, No. 1 Bore (With Bushing)	Oil Clearance	0.063—0.115 mm (0.0025—0.0045 in.)
Camshaft Journal-to-Bushing, All Except No. 1 Bore	Oil Clearance	0.088—0.140 mm (0.0035—0.0055 in.)
Camshaft Intake Lobe (Two-Valve Head Engines)	Height	7.05—7.31 mm (0.278—0.288 in.)
Camshaft Intake Lobe (Four-Valve Head Engines)	Height	5.88—6.14 mm (0.231—0.242 in.)
Camshaft Exhaust Lobe (Two-Valve Head Engines)	Height	6.89—7.15 mm (0.271—0.281 in.)
Camshaft Exhaust Lobe (Four-Valve Head Engines)	Height	5.84—6.10 mm (0.230—0.240 in.)
Fuel Supply Pump Camshaft Lobe (Early)	Diameter	41.15—41.41 mm (1.62—1.63 in.)
Fuel Supply Pump Camshaft Lobe (Late)	Diameter	42.67—42.93 mm (1.68—1.69 in.)
Camshaft Follower	OD	31.61—31.64 mm (1.245—1.246 in.)
Camshaft Follower Bore in Block	ID	31.70—31.75 mm (1.248—1.250 in.)
Camshaft Follower-to-Bore	Clearance	0.06—0.13 mm (0.002—0.005 in.)
Fuel Supply Pump Push Rod	OD	9.891—9.917 mm (0.3894—0.3904 in.)
Fuel Supply Pump Push Rod Bore in Block	ID	10.00—10.05 mm (0.3937—0.3957 in.)

Continued on next page

Item	Measurement	Specification
Balancer Shaft Bushing (New)	ID	40.177—40.237 mm (1.5818—1.5841 in.)
Balancer Shaft Journal	OD	40.135—40.161 mm (1.5801—1.5811 in.)
Balancer Shaft Journal-to-Bushing	Oil Clearance	0.016—0.102 mm (0.0006—0.0040 in.)
Cylinder Block Bore ID for Balancer Shaft Bushing	ID	43.262—43.288 mm (1.7032—1.7042 in.)
Balancer Shaft Thrust Plate (New)	Thickness	2.97—3.02 mm (0.117—0.119 in.)
Balancer Shaft Thrust Plate-to-Gear	Clearance	0.05—0.26 mm (0.002—0.010 in.)
Upper Idler Gear Bushing (Two-Valve Head) (30 mm Wide Gear)	ID	69.802—69.832 mm (2.7481—2.7493 in.)
Upper Idler Gear Bushing (Two-Valve Head) (22 mm Wide Gear)	ID	44.49—44.54 mm (1.751-1.753 in.)
Upper Idler Gear Bushing (Four-Valve Head)	ID	92.732—92.762 mm (3.6509—3.6520 in.)
Lower Idler Gear Bushing	ID	44.489—44.539 mm (1.7515—1.7535 in.)
Upper Idler Gear Shaft (Two-Valve Head) (30 mm Wide Gear)	OD	69.757—69.777 mm (2.7463—2.7471 in.)
Upper Idler Gear Shaft (Two-Valve Head) (22 mm Wide Gear)	OD	44.43—44.46 mm (1.749-1.750 in.)
Upper Idler Gear Shaft (Four-Valve Head)	OD	92.687—92.707 mm (3.6491—3.6499 in.)
Lower Idler Gear Shaft	OD	44.437—44.463 mm (1.7495—1.7505 in.)
Upper Idler Gear Bushing-to-Shaft (Two-Valve Head)	Oil Clearance	0.075—0.125 mm (0.0030—0.0049 in.)

Continued on next page

Item	Measurement	Specification
Upper Idler Gear Bushing-to-Shaft (Four-Valve Head)	Oil Clearance	0.0025—0.075 mm (0.0010—0.0030 in.)
Lower and Upper Idler Shaft Spring Pin	Protrusion	2.79—4.83 mm (0.11—0.19 in.)
Front Plate Countersunk TORX® Screws	Torque	25 N•m (221 lb-in.)
Front Plate Threaded Studs	Torque	35 N•m (26 lb-ft)
Balancer Shaft Thrust Plate Cap Screws	Torque	40 N•m (29.5 lb-ft)
Balancer Shaft Removable Weights (One-Bolt Weights)	Torque	58 N•m (43 lb-ft)
Balancer Shaft Removable Weights (Two-Bolt Weights)	Torque	40 N•m (30 lb-ft)
Oil Pump Drive Gear Staked Nut	Torque	50 N•m (37 lb-ft)
Lower Idler Gear Cap Screw (Lubricated Threads)	Torque	70 N•m (53 lb-ft)
Camshaft Thrust Plate Cap Screws	Torque	35 N•m (26 lb-ft)
Upper Idler Gear Cap Screw	Torque	70 N•m (53 lb-ft)
Injection Pump Drive Gear Cover	Torque	6 N•m (4.5 lb-ft) (53 lb-in.)
Timing Gear Cover-to-Front Plate and Cylinder Block Cap Screws and Nuts - Initial Torque	Torque	20 N•m (177 lb-in.)
Oil Pan-to-Timing Gear Cover - Initial Torque	Torque	20 N•m (177 lb-in.)
Timing Gear Cover-to-Front Plate and Cylinder Block Cap Screws and Nuts - Final Torque	Torque	35 N•m (26 lb-ft)
Oil Pan-to-Timing Gear Cover - Final Torque	Torque	35 N•m (26 lb-ft)

06
200
28

TORX is a registered trademark of Camcar/Textron

Continued on next page

DPSG,OUO1004,2726 –19–24NOV03–5/6

Item	Measurement	Specification
Fuel Injection Gear Magnetic Pick-Up Sensor	Torque	15 N•m (133 lb-in.)
Crankshaft Timing Wheel Magnetic Pick-Up Sensor	Torque	15 N•m (133 lb-in.)

DPSG,OUO1004,2726 –19–24NOV03–6/6

Lubrication System Specifications

Item	Measurement	Specification
Oil Filter Header Cap Screws (High, Front and Rear Mounted)	Torque	35 N•m (26 lb-ft)
Oil Filter Header-to-Bracket Cap Screws (Left Hand and Remote Mounted)	Torque	73 N•m (54 lb-ft)
Oil Cooler Cover Cap Screws	Torque	35 N•m (26 lb-ft)
Oil Line Clamp Cap Screw	Torque	10 N•m (88 lb-in.)
Turbocharger Oil Inlet Line	Torque	24 N•m (212 lb-in.)
Remote Oil Filter Line End Nuts	Torque	66 N•m (49 lb-ft)
Oil Cooler-to-Housing Allen Head Cap Screws	Torque	12 N•m (106 lb-in.)
Oil Cooler Elbow Adapter Cap Screws	Torque	35 N•m (26 lb-ft)
Line Fitting on Top of Oil Cooler Housing	Torque	50 N •m (37 lb-ft)
Oil Line Clamp on Top of Oil Cooler Housing	Torque	7 N•m (62 lb-in.)
Oil Cooler Line End Nuts (Remote Filter Applications)	Torque	66 N•m (49 lb-ft)
Oil Cooler Drain Plug	Torque	5 N•m (44 lb-in.)
Oil Bypass Valve Springs	Free Length Spring Load at 29 mm (1.14 in.) Compressed Length	51 mm (2.00 in.) 87.8 N (20 lb-force)
Oil Pressure Regulating Valve Spring Specifications		
4-Cylinder Engines (Except for Saran Engines Listed Below)	Spring Free Length	115.5 mm (4.55 in.)
4-Cylinder Engines (Except for Saran Engines Listed Below)	Spring Load at 42.5 mm (1.68 in.)	40.5—49.4 N (9.1—11.1 lb-force)

Continued on next page

Item	Measurement	Specification
6-Cylinder Engines and CD4045HF157/158, CD4045TF157/158 and CD4045TF257/258	Spring Free Length	119 mm (4.68 in.)
6-Cylinder Engines and CD4045HF157/158, CD4045TF157/158 and CD4045TF257/258	Spring Load at 42.5 mm (1.68 in.)	60.1—73.4 N (13.5—16.5 lb-force)
Oil Pressure Regulating Valve	Torque	95 N•m (70 lb-ft)
Oil Fill Tube Cap Screws	Torque	35 N•m (26 lb-ft)
Oil Pump Pick-Up Tube Cap Screws	Torque	35 N•m (26 lb-ft)
Oil Pump Gears	Thickness	35.975—36.025 mm (1.4163—1.4183 in.)
Oil Pump Gears	Axial Clearance	0.045—0.165 mm (0.0018—0.0065 in.)
Oil Pump Gears	Radial Clearance	0.131—0.211 mm (0.005—0.008 in.)
Oil Pump Drive Shaft	OD	16.017—16.037 mm (0.6306—0.6314 in.)
Oil Pump Bushing in Housing	ID	16.052—16.102 mm (12.316—12.332 in.)
Oil Pump Idler Shaft	OD	12.316—12.332 mm (0.4849—0.4855 in.)
Oil Pump Idler Gear	ID	12.355—12.363 mm (0.4864—0.4867 in.)
Oil Pump Drive Gear “Staked” Nut	Torque	50 N•m (37 lb-ft)
Oil Pump-to-Front Plate and Oil Pump Pick-Up Tube Cap Screws	Torque	35 N•m (26 lb-ft)
Oil Pump Lower Idler Gear Cap Screw (Lubricated Threads)	Torque	70 N•m (53 lb-ft)
Oil Pan M8 Cap Screws	Torque	35 N•m (26 lb-ft)

Continued on next page

Item	Measurement	Specification
Oil Pan M10 Cap Screws up to 110 mm	Torque	70 N•m (52 lb-ft)
Oil Pan M10 Cap Screws 110 mm and Above	Torque	60 N•m (44 lb-ft)
Oil Pan M10 Cap Screws—Option Code 1931 and PE4045DLV50 or PE4045TLV50 Engines	Torque	44 N•m (33 lb-ft)
Flywheel Housing-to-Oil Pan Cap Screws (if required)	Torque	280 N•m (207 lb-ft)
Oil Pan Drain Plug with Copper Washer	Torque	70 N•m (52 lb-ft)
Oil Pan Drain Plug with O-Ring	Torque	50 N•m (37 lb-ft)
Oil Pan Drain Plugs—Option Code 1976 and 1981	Torque	21 N•m (186 lb-in.)
Oil Return Port Plugs—Option Code 1976 and 1981	Torque	27 N•m (20 lb-ft)
Oil Pan Drain Plugs—Option Codes 1961	Torque	40 N•m (29.5 lb-ft)
Oil Pan Drain Plugs with 10 mm Square Socket Head	Torque	68 N•m (50 lb-ft)
Oil Level Sensor Cap Screws	Torque	10 N•m (88 lb-in.)

DPSG,OUO1004,2730 –19–21NOV03–3/3

Cooling System Specifications

Item	Measurement	Specification
Coolant Manifold/Thermostat Cover Cap Screws (Single Thermostat)	Torque	70 N•m (52 lb-ft)
Air Bleed Port Plug	Torque	6 N•m (53 lb-in.)
Thermostat Cover-to-Coolant Manifold Cap Screws (6010 Series Tractors with Single Thermostat)	Torque	30 N•m (22 lb-ft)
Coolant Manifold-to-Cylinder Head Cap Screws (6010 Series Tractors with Single Thermostat)	Torque	35 N•m (26 lb-ft)
Coolant Pump Impeller Bore	ID	11.973—11.999 mm (0.4714—0.4724 in.)
Coolant Pump Bearing Shaft (Impeller End)	OD	12.025—12.038 mm (0.4734—0.4739 in.)
Coolant Pump Bearing Shaft (Pulley End)	OD	39.997—40.013 mm (1.5747—1.5753 in.)
Coolant Pump Housing Bearing Bore	ID	61.961—61.987 mm (2.4394—2.4404 in.)
Coolant Pump Impeller (Standard Flow)	Position	2.46—2.58 mm (0.096—0.102 in.) below end of shaft
Coolant Pump Impeller (High Flow)	Position	Flush ± 0.13 mm (0.005 in.) with end of shaft
Coolant Pump Housing-to-Impeller	Minimum Clearance	0.27 mm (0.010 in.)
Coolant Pump Pulley Cap Screws	Torque	15 N•m (133 lb-in.)
Coolant Pump-to-Timing Cover Cap Screws	Torque	16 N•m (142 lb-in.)
Coolant Pump Inlet Elbow Cap Screws	Torque	35 N•m (26 lb-ft)
Fan-to-Pulley Hub M8 Cap Screws	Torque	35 N•m (26 lb-ft)
Fan-to-Pulley Hub M10 Cap Screws	Torque	70 N•m (52 lb-ft)

Continued on next page

Item	Measurement	Specification
Fan Drive Hub	Radial Runout	0.038 mm (0.0015 in.)
Belt Tensioner-to-Timing Cover and Engine Cap Screws	Torque	50 N•m (37 lb-ft)
Belt Tensioner Pulley Cap Screw	Torque	40 N•m (29 lb-ft)
Belt Tensioner	Spring Tension	18—22 N•m (13—16 lb-ft)
8-Rib Poly-Vee Belt		
New Belt[1]	Tension	535—715 N (120—160 lb-force)
Used Belt	Tension	400—580 N (90—130 lb-force)
Fan Drive (Option Codes 2301 and 2302)		
Bearing Housing	ID	38.018—38.038 mm (1.4968—1.4976 in.)
Bearing	OD	38.087—38.100 mm (1.4995—1.5000 in.)
Shaft	OD	18.948—18.961 mm (0.7460—0.7465 in.)
Hub	ID	18.910—18.936 mm (0.7445—0.7455 in.)
Fan Drive (Option Codes 2303, 2304, 2312, 2313, and 2314)		
Bearing Housing	ID	47.573—47.599 mm (1.8730—1.8740 in.)
Bearing	OD	47.612—47.625 mm (1.8745—1.8750 in.)
Shaft	OD	25.387—25.400 mm (0.9995—1.0000 in.)

[1] New Belt Tension (Engines PE4045D039000—05400), 470—650 N (105—145 lb-force)

Continued on next page

Item	Measurement	Specification
Hub	ID	25.337—25.353 mm (0.9975—0.9985 in.)
Fan Drive		
Rear Housing Face-to-Hub Front Face (Option Codes 2301 and 2303)	Distance	110.85—110.87 mm (4.364—4.365 in.)
Rear Housing Face-to-Hub Front Face (Option Codes 2302, 2304, 2312, 2313 and 2314)	Distance	106.65—106.67 mm (4.199—4.200 in.)
Fan Drive Idler Cap Screw	Torque	50 N•m (37 lb-ft)
Fan Drive Assembly-to-Timing Cover Cap Screws	Torque	70 N•m (52 lb-ft)
Rear Housing Face-to-Hub Front Face	Distance	123.5 mm (4.862 in.)
Fan Drive Assembly (2254 Combine)		
Fan Idler Axle Shaft-to-Block	Torque	340 N•m (251 lb-ft)
Fan Idler-to-Shaft Retaining Nut	Torque	225 N•m (166 lb-ft)
Fan Drive Bracket-to-Block Cap Screw	Torque	340 N•m (251 lb-ft)
Fan Drive Bracket-to-Cylinder Head Cap Screws	Torque	140 N•m (103 lb-ft)
Upper Fan Drive Bracket-to-Lower Bracket Cap Screws/Nuts	Torque	140 N•m (103 lb-ft)
Coolant Heater Lock Nut	Torque	35 N•m (26 lb-ft)
Coolant Heater to Adapter	Torque	60 N•m (44 lb-ft)
Coolant Heater Clamp Cap Screw	Torque	16 N•m (142 lb-in.)
Cold Start Switch	Torque	5 N•m (44 lb-in.)

Continued on next page

Item	Measurement	Specification
EGR Coolant Inlet Tube-to-EGR Cooler	Torque	35 N•m (25 lb-ft)
EGR Coolant Outlet Tube-to-EGR Cooler	Torque	35 N•m (25 lb-ft)

DPSG,OUO1004,2734 –19–21NOV03–4/4

Air Intake and Exhaust System Specifications

Item	Measurement	Specification
Turbocharger (AiResearch/Garret)	Axial Bearing End Play	0.025—0.102 mm (0.001—0.004 in.)
Turbocharger (CZ)	Axial Bearing End Play	0.11—0.16 mm (0.004—0.006 in.)
Turbocharger (Schwitzer)	Axial Bearing End Play	0.064—0.114 mm (0.0025—0.0045 in.)
Turbocharger (BorgWarner/Schwitzer)	Axial Bearing End Play	0.14 mm (0.0055 in.) Maximum
Turbocharger (AiResearch/Garret)	Radial Bearing Clearance	0.08—0.18 mm (0.003—0.007 in.)
Turbocharger (CZ)	Radial Bearing Clearance	0.37—0.46 mm (0.015—0.018 in.)
Turbocharger (BorgWarner/Schwitzer)	Radial Bearing Clearance	0.51 mm (0.0200 in.) Maximum
Turbocharger	Actuator End Play	0.05—0.056 mm (0.002—0.022 in.)
Turbocharger-to-Exhaust Manifold Nuts	Torque	70 N•m (52 lb-ft)
Center Housing-to-Turbine Housing Cap Screw	Torque	20 N•m (177 lb-in.)
Turbocharger Oil Return Pipe Cap Screws	Torque	24 N•m (212 lb-in.)
Turbocharger Oil Inlet Line (At Turbocharger)	Torque	24 N•m (212 lb-in.)
Turbocharger Oil Inlet Line (At Oil Filter Header)	Torque	24 N•m (212 lb-in.)
Turbocharger Air Inlet Hose Clamp	Torque	6 N•m (4.5 lb-ft) (53 lb-in.)
Exhaust Adapter-to-Turbocharger Clamp	Torque	7.5 N•m (5.5 lb-ft) (66 lb-in.)
Turbocharger Exhaust Elbow	Torque	47 N•m (35 lb-ft)

Continued on next page

Item	Measurement	Specification
Exhaust Manifold-to-Cylinder Head Cap Screws	Torque	70 N•m (52 lb-ft)
Air Intake Pipe-to-Cylinder Head	Torque	70 N•m (52 lb-ft)
Air Intake Pipe Hose Clamp	Torque	6 N•m (4.5 lb-ft) (53 lb-in.)
Intake Manifold Cap Screws	Torque	73 N•m (54 lb-ft)
Adapter-to-Air Inlet Tube	Torque	50 N•m (37 lb-ft)
Air Inlet-to-Intake Manifold (Tier 3)	Torque	50 N•m (37 lb-ft)
EGR Valve-to-Intake Manifold	Torque	15 N•m (11 lb-ft)
EGR Cooler-to-Exhaust Manifold	Torque	35 N•m (25 lb-ft)

DPSG,OUO1004,2736 –19–11DEC03–2/2

06
200
38

Starting and Charging Systems Specifications

Item	Measurement	Specification
Alternator Strap or Tensioner Support-to-Timing Gear Cover	Torque	25 N•m (221 lb-in.)
Tensioner Support or Alternator Strap Support-to-Alternator Bracket	Torque	70 N•m (52 lb-ft)
Alternator Bracket-to-Block	Torque	63 N•m (48 lb-ft)
Alternator Pulley Nut	Torque	80 N•m (60 lb-ft)

DPSG,OUO1004,1144 –19–18NOV99–1/1

Engine Diagnostic Specifications

Item	Measurement	Specification
Engine Compression Pressure Test	Minimum Engine Compression Pressure Maximum Difference between Cylinders	2380—2800 kPa (24—28 bar) (345—405 psi) 350 kPa (3.5 bar) (50 psi)
Minimum Oil Pressure—No Load at Slow Idle and 93°C (200°F) Oil Temperature	Minimum Pressure	105 kPa (1.05 bar) (15 psi)
Minimum Oil Pressure—Full Load at Rated Speed and 105°C (220°F) Oil Temperature[1]	Minimum Pressure	275 kPa (2.75 bar) (40 psi)
Radiator Cap (All Engines Except Tier 3/Stage IIIA)	Holding Pressure (10 Second Minimum Hold)	70 kPa (0.7 bar) (10 psi) Minimum
Radiator Cap (Tier 3/Stage IIIA)	Holding Pressure (10 Second Minimum Hold)	100 kPa (1.0 bar) (15 psi) Minimum

[1]Engine oil pressure can fluctuate during operation from 276 kPa (7.8 bar)(40 psi) to 586 kPa (5.9 bar)(85 psi)

DPSG,OUO1004,2737 –19–26APR00–1/1

06
210
1

Dynamometer Test Specifications

Power ratings for various injection pump options are provided for OEM applications on the charts that follow. For Construction Equipment applications, refer to SP458 Specifications Handbook. For North American Agricultural applications, refer to DB1216 Specifications Handbook. If specifications are not listed in handbooks, refer to factory DTAC for assistance.

Continued on next page

RG,100,JW7641 –19–03JUN04–1/22

NOTE: The power specifications shown below apply to Dubuque, Torreon and Saran-built OEM engines. Specifications are subject to change. Refer to factory DTAC for assistance.

Engine speeds listed are as preset to factory specification. In most cases, slow idle speed will be reset depending upon specific vehicle application requirements. Refer to your machine technical manual for engine speeds that are different from those preset at the factory.

Power ratings specify flywheel power for a bare engine without the drag effect of a cooling fan or other accessories like an air compressor.

Altitude, fuel temperature, air temperature, and humidity may affect engine performance. See EFFECTS OF ALTITUDE AND TEMPERATURE ON ENGINE PERFORMANCE later in this group.

POWER RATINGS ON DYNAMOMETER FOR OEM ENGINES[a]

Engine Model (Emission Certification)	Fuel System Option Code	Electronic Software Option Codes	Original Injection Pump (Part No.)	Replaced By Injection Pump (Part No.)	Governor Regulation	Rated Speed at Full Load (rpm)[a]	Fast Idle (rpm)[a]	Power Rating kW (HP)[b]
4045DF120 (Non—Certified)	16MR		RE504463		STD	2500	2700	63 (85)
	16MS		RE504464		STD	2500	2700	63 (85)
	16ZW		RE509527		3—5%	2500	2600	63 (85)
	16ZX		RE509528		3—5%	2500	2600	63 (85)
	16ZY		RE509529		3—5%	2500	2600	63 (85)
4045DF150 (Tier 1)	1601		RE61649	RE67557	STD	2500	2700	60 (80)
	1601		RE67557		STD	2500	2700	60 (80)
	1602		RE59809		STD	2500	2700	63 (85)
	1603		RE63555	RE67558	3—5%	1800	1870	53 (71)
	1603		RE67558	RE505070	3—5%	1800	1870	53 (71)
	1603		RE505070	RE506132	3—5%	1800	1870	53 (71)
	1603		RE506132		3—5%	1800	1870	53 (71)
	1663		RE71089	RE500949	STD	2500	2700	60 (80)
	1663		RE500949		STD	2500	2700	60 (80)
	1671		RE67559	RE502714	STD	2500	2700	60 (80)
	1671		RE502714		STD	2500	2700	60 (80)
	1673		RE60085	RE67560	3—5%	1800	1870	53 (71)
	1673		RE67560	RE506130	3—5%	1800	1870	53 (71)
	1673		RE506130		3—5%	1800	1870	53 (71)
	1674		RE60089	RE67561	3—5%	1800	1870	53 (71)
	1674		RE67561	RE506131	3—5%	1800	1870	53 (71)
	1674		RE506131		3—5%	1800	1870	53 (71)
	1691		RE61649	RE500831	STD	2500	2700	60 (80)

[a]Engine speeds listed are preset to factory specifications. Slow idle speed may be reset depending upon specific vehicle application requirements. Refer to your machine operator's manual for engine speeds that are different from those preset at the factory.

[b]Power ratings are for a bare engine without drag of cooling fan or accessories like air compressor. All power ratings are at full load at rated speed.

Continued on next page

POWER RATINGS ON DYNAMOMETER FOR OEM ENGINES[a]								
Engine Model (Emission Certification)	**Fuel System Option Code**	**Electronic Software Option Codes**	**Original Injection Pump (Part No.)**	**Replaced By Injection Pump (Part No.)**	**Governor Regulation**	**Rated Speed at Full Load (rpm)[a]**	**Fast Idle (rpm)[a]**	**Power Rating kW (HP)[b]**
	1691		RE500831	RE500948	STD	2500	2700	60 (80)
	1691		RE500948		STD	2500	2700	60 (80)
	16BG		RE69778	RE502712	STD	2500	2700	63 (85)
	16BG		RE502712		STD	2500	2700	63 (85)
	16BH		RE500873	RE502715	STD	2500	2700	63 (85)
	16BH		RE502715		STD	2500	2700	63 (85)
	16BJ		RE500589		STD	2250	2450	36 (48)
	16CL		RE501364	RE502713	STD	2200	2400	58 (78)
	16CL		RE502713		STD	2200	2400	58 (78)
			RE505803		STD	2300	2500	60 (80)
	16DL		RE70452		STD	2400	2600	61 (82)
	16EN		RE502019		STD	2500	2700	60 (80)
	16GB		RE502711		STD	2500	2700	60 (80)
	16GC		RE502716		STD	2500	2700	60 (80)
	16HJ		RE500948		STD	2500	2700	60 (80)
	16HK		RE500949		STD	2500	2700	60 (80)
	16HV		RE503258		STD	2250	2450	36 (48)
	16KE		RE503560		STD	2500	2700	52 (70)
	16LM		RE502711		STD	2500	2700	53 (71)
	16LN		RE67558	RE505070	3—5%	1800	1870	53 (71)
	16LN		RE505070	RE506132	3—5%	1800	1870	53 (71)
	16LN		RE506132		3—5%	1800	1870	53 (71)
	16RB		RE503729		3—5%	1500	1560	44 (59)
	16RC		RE504693		3—5%	1500	1560	44 (59)
			RE502886		3—5%	2500	2700	60 (80)
4045DF151 (Tier 1)	1663		RE71089	RE500949	STD	2500	2700	60 (80)
	1663		RE500949		STD	2500	2700	60 (80)
4045DF152 (Tier 1)	1601		RE67557		STD	2500	2700	60 (80)
	16GB		RE502711		STD	2500	2700	60 (80)
4045DF153 (Tier 1)	16AY		RE500505		STD	2400	2600	62 (83)
4045DF154 (Tier 1)	16AY		RE500505		STD	2400	2600	62 (83)
	16JS		RE500505		STD	2400	2600	62 (83)
4045DF157 (Tier 1)	16AA		RE503729		3—5%	1500	1560	44 (59)

[a]Engine speeds listed are preset to factory specifications. Slow idle speed may be reset depending upon specific vehicle application requirements. Refer to your machine operator's manual for engine speeds that are different from those preset at the factory.

[b]Power ratings are for a bare engine without drag of cooling fan or accessories like air compressor. All power ratings are at full load at rated speed.

Continued on next page

RG,100,JW7641 –19–03JUN04–3/22

POWER RATINGS ON DYNAMOMETER FOR OEM ENGINES[a]								
Engine Model (Emission Certification)	**Fuel System Option Code**	**Electronic Software Option Codes**	**Original Injection Pump (Part No.)**	**Replaced By Injection Pump (Part No.)**	**Governor Regulation**	**Rated Speed at Full Load (rpm)[a]**	**Fast Idle (rpm)[a]**	**Power Rating kW (HP)[b]**
	16BB		RE504693		3—5%	1500	1560	44 (59)
	16RB		RE503729		3—5%	1500	1560	44 (59)
	16RC		RE504693		3—5%	1500	1560	44 (59)
4045DF158 (Tier 1)	1673		RE67560		3—5%	1800	1870	53 (71)
	1674		RE67561		3—5%	1800	1870	53 (71)
	16AA		RE503729		3—5%	1500	1560	44 (59)
	16BB		RE504693		3—5%	1500	1560	44 (59)
	16CC		RE503731		3—5%	1800	1870	53 (71)
	16DD		RE504694		3—5%	1800	1870	53 (71)
	16RB		RE503729		3—5%	1500	1560	44 (59)
	16RC		RE504693		3—5%	1500	1560	44 (59)
4045DF270 (Tier 2)	164J (12V)		RE519017		STD	2250	2450	36 (48)
	164K (24V)		RE519018		STD	2250	2450	36 (48)
	164L (12V)		RE519019		STD	2500	2700	55 (74)
	164M (24V)		RE519020		STD	2500	2700	55 (74)
	164N (12V)		RE519021		STD	2500	2700	60 (80)
	164O (24V)		RE519022		STD	2500	2700	60 (80)
	162Q, 164P (12V)		RE519023		3—5%	1800	1870	50 (67)
	164Q (24V)		RE519024		3—5%	1800	1870	50 (67)
4045DFG70			RE505803		STD	2500	2700	60 (80)
4045DFM50 (Non—Certified Marine)	16HR		RE503164		STD	2500	2700	63 (85)
	16HS		RE503165		STD	2500	2700	63 (85)
	16HT		RE503166		3—5%	1800	1870	40 (54)
	16HU		RE503167		3—5%	1800	1870	40 (54)
4045DFM70 (Tier 2 Certified Marine)	167E (12V)		RE521300		STD	2500	2600	60 (80)
	167F (24V)		RE521301		STD	2500	2600	60 (80)

[a]Engine speeds listed are preset to factory specifications. Slow idle speed may be reset depending upon specific vehicle application requirements. Refer to your machine operator's manual for engine speeds that are different from those preset at the factory.

[b]Power ratings are for a bare engine without drag of cooling fan or accessories like air compressor. All power ratings are at full load at rated speed.

Continued on next page

RG,100,JW7641 –19–03JUN04–4/22

POWER RATINGS ON DYNAMOMETER FOR OEM ENGINES[a]								
Engine Model (Emission Certification)	**Fuel System Option Code**	**Electronic Software Option Codes**	**Original Injection Pump (Part No.)**	**Replaced By Injection Pump (Part No.)**	**Governor Regulation**	**Rated Speed at Full Load (rpm)[a]**	**Fast Idle (rpm)[a]**	**Power Rating kW (HP)[b]**
	167G (12V)		RE519023		3—5%	1800	1870	50 (67)
	167H (24V)		RE519024		3—5%	1800	1870	50 (67)
	167J (12V)		RE503729		3—5%	1500	1560	44 (59)
	167K (24V)		RE504693		3—5%	1500	1560	44 (59)
4045DJ31						2400	2605	55(74)
4045TF120 (Non—Certified)	16 MT		RE503733		3—5%	1500	1560	70 (94)
	16MU		RE505050	RE506990	3—5%	1500	1560	70 (94)
	16MU		RE506990		3—5%	1500	1560	70 (94)
	16ZW		RE509527		3—5%	2500	2600	63 (85)
	16ZX		RE509528		3—5%	2500	2600	63 (85)
	16ZY		RE509529		3—5%	2500	2600	63 (85)
	16MT		RE506989		3—5%	1500	1560	70 (94)
4045TF150 (Tier 1)	1605		RE69781		STD	2500	2700	86 (115)
	1606		RE64133	RE505927		2400	2600	93 (125)
	1606		RE505927			2400	2600	93 (125)
	1656		RE63610	RE67562	3—5%	1800	1870	75 (101)
	1656		RE67562		3—5%	1800	1870	75 (101)
	1675		RE69782		STD	2500	2700	86 (115)
	1676		RE60093	RE61668	STD	2500	2700	86 (115)
	1676		RE61668		STD	2500	2700	86 (115)
	1677		RE60096	RE67563	3—5%	1800	1870	75 (101)
	1677		RE67563		3—5%	1800	1870	75 (101)
	1692		RE61668	RE500881	STD	2500	2700	86 (115)
	1692		RE500881	RE502416	STD	2500	2700	86 (115)
	1692		RE502416		STD	2500	2700	86 (115)
	1694		RE67863	RE69779	STD	2500	2700	74 (99)
	1694		RE69779		STD	2500	2700	74 (99)
	1695		RE69739	RE69780	STD	2500	2700	74 (99)
	1695		RE69780		STD	2500	2700	74 (99)
	16AB		RE69779		STD	2500	2700	75 (101)
	16BF		RE500848		STD	2200	2400	73 (98)
	16CE		RE501180		STD	2500	2700	74 (99)
	16CM		RE501365		STD	2200	2400	66 (89)
	16GL		RE502706		STD	2300	2500	78 (105)
	16LP		RE67562		3—5%	1800	1870	75 (101)
	16LZ		RE503735		3—5%	1800	1870	82 (110)

[a]Engine speeds listed are preset to factory specifications. Slow idle speed may be reset depending upon specific vehicle application requirements. Refer to your machine operator's manual for engine speeds that are different from those preset at the factory.

[b]Power ratings are for a bare engine without drag of cooling fan or accessories like air compressor. All power ratings are at full load at rated speed.

Continued on next page

RG,100,JW7641 –19–03JUN04–5/22

POWER RATINGS ON DYNAMOMETER FOR OEM ENGINES[a]								
Engine Model (Emission Certification)	**Fuel System Option Code**	**Electronic Software Option Codes**	**Original Injection Pump (Part No.)**	**Replaced By Injection Pump (Part No.)**	**Governor Regulation**	**Rated Speed at Full Load (rpm)[a]**	**Fast Idle (rpm)[a]**	**Power Rating kW (HP)[b]**
	16MA		RE504696	RE504931	3—5%	1800	1870	82 (110)
	16MA		RE504931		3—5%	1800	1870	82 (110)
	16MT		RE503733	RE505050	3—5%	1500	1560	70 (94)
	16MT		RE505050		3—5%	1500	1560	70 (94)
	16MU		RE504695	RE505050	3—5%	1500	1560	70 (94)
	16MU		RE505050	RE506990	3—5%	1500	1560	70 (94)
	16MU		RE506990		3—5%	1500	1560	70 (94)
	16TG		RE507941		STD	2000	2185	77 (103)
	16YG		RE508834		STD	2000	2185	77 (103)
	16YU		RE508754		3—5%	1800	1870	75 (101)
4045TF151 (Tier 1)	1677		RE60096	RE67563	3—5%	1800	1870	75 (101)
	1677		RE67563		3—5%	1800	1870	75 (101)
	16CU		RE501192		STD	2200	2400	79 (107)
	16NH		RE505411		3—5%	1800	2240	75 (101)
4045TF152 (Tier 1)	16AX		RE500551		STD	2400	2600	76 (102)
4045TF154 (Tier 1)	1605		RE69781		STD	2500	2700	86 (115)
4045TF155 (Tier 1)	16AX		RE500551		STD	2400	2600	76 (102)
	16JT		RE500551		STD	2400	2600	76 (102)
4045TF157 (Tier 1)	16GQ		RE503048		3—5%	1500	1560	83 (111)
	16LV		RE503830		3—5%	1500	1560	83 (111)
4045TF158 (Tier 1)	16GQ		RE503048		3—5%	1500	1560	83 (111)
	16LZ		RE503735		3—5%	1800	1870	82 (110)
	16MA		RE504696		3—5%	1800	1870	82 (110)
	16MT		RE503733	RE506989	3—5%	1500	1560	70 (94)
	16MT		RE506989		3—5%	1500	1560	70 (94)
	16MU		RE504695	RE505050	3—5%	1500	1560	70 (94)
	16MU		RE505050	RE506990	3—5%	1500	1560	70 (94)
	16MU		RE506990		3—5%	1500	1560	70 (94)
4045TF161 (Tier 1)	16PZ		RE500848		STD	2200	2400	73 (98)
4045TF162 (Non—Certified)	16TG		RE507941		STD	2000	2170	77 (103)

[a]Engine speeds listed are preset to factory specifications. Slow idle speed may be reset depending upon specific vehicle application requirements. Refer to your machine operator's manual for engine speeds that are different from those preset at the factory.

[b]Power ratings are for a bare engine without drag of cooling fan or accessories like air compressor. All power ratings are at full load at rated speed.

Continued on next page

RG,100,JW7641 –19–03JUN04–6/22

POWER RATINGS ON DYNAMOMETER FOR OEM ENGINES[a]								
Engine Model (Emission Certification)	**Fuel System Option Code**	**Electronic Software Option Codes**	**Original Injection Pump (Part No.)**	**Replaced By Injection Pump (Part No.)**	**Governor Regulation**	**Rated Speed at Full Load (rpm)[a]**	**Fast Idle (rpm)[a]**	**Power Rating kW (HP)[b]**
4045TF220 (Non—Certified)	16GQ		RE503048	RE506544	3—5%	1500	1560	83 (111)
	16GQ		RE506544		3—5%	1500	1560	83 (111)
	16LV		RE503830	RE506545	3—5%	1500	1560	83 (111)
	16LV		RE506545		3—5%	1500	1560	83 (111)
	16MT		RE503733			1500	1560	70 (94)
	16MV		RE503736		3—5%	1800	1870	100 (134)
	16MW		RE505051		3—5%	1800	1870	100 (134)
	16NT		RE504465		STD	2500	2700	86 (115)
	16NU		RE504466		STD	2500	2700	86 (115)
	16ZZ		RE508613		3—5%	2100	2200	107 (143)
	161A		RE509525		3—5%	2100	2200	107 (143)
	161B		RE509526		3—5%	2100	2200	107 (143)
4045TF250 (Tier 1)	1606		RE64133	RE505927	STD	2400	2600	93 (125)
	1606		RE505927		STD	2400	2600	93 (125)
	1608		RE67564		3—5%	1800	1870	84 (113)
	1667		RE59968		STD	2400	2600	93 (125)
	1682		RE60128	RE67566	3—5%	1800	1870	84 (113)
	1682		RE67566		3—5%	1800	1870	84 (113)
	1683		RE60124	RE505926	STD	2400	2600	93 (125)
	1683		RE505926		STD	2400	2600	93 (125)
	160R		RE70941		3—5%	1800	1870	84 (113)
	16CV		RE501346		STD	2200	2400	85 (114)
	16LQ		RE67564		3—5%	1800	1870	84 (113)
	16MB		RE503737		3—5%	1800	1870	91 (122)
	16MC		RE504932		3—5%	1800	1870	91 (122)
	161C		RE506881		3—5%	1800	1870	100 (134)
	161D		RE506882		3—5%	1800	1870	100 (134)
	163Z		RE505927		STD	2400	2600	93 (125)
4045TF251 (Tier 1)	1606		RE64133	RE505927	STD	2400	2600	93 (125)
	1606		RE505927		STD	2400	2600	93 (125)
4045TF252 (Tier 1)	169P		RE522714		3—5%	3000		119 (160)
	169Q		RE522697		3—5%	3000		119 (160)
4045TF253 (Tier 1)	16TE		RE507257		STD	2400	2600	85 (114)

[a]Engine speeds listed are preset to factory specifications. Slow idle speed may be reset depending upon specific vehicle application requirements. Refer to your machine operator's manual for engine speeds that are different from those preset at the factory.

[b]Power ratings are for a bare engine without drag of cooling fan or accessories like air compressor. All power ratings are at full load at rated speed.

Continued on next page

RG,100,JW7641 –19–03JUN04–7/22

POWER RATINGS ON DYNAMOMETER FOR OEM ENGINES[a]								
Engine Model (Emission Certification)	**Fuel System Option Code**	**Electronic Software Option Codes**	**Original Injection Pump (Part No.)**	**Replaced By Injection Pump (Part No.)**	**Governor Regulation**	**Rated Speed at Full Load (rpm)[a]**	**Fast Idle (rpm)[a]**	**Power Rating kW (HP)[b]**
4045TF254 (Tier 1)			RE523458		3—5%	3000		119 (160)
4045TF257 (Tier 1)	16GQ		RE503048		3—5%	1500	1560	83 (111)
	16LV		RE503830		3—5%	1500	1560	83 (111)
4045TF258 (Tier 1)	16GQ		RE503048		3—5%	1500	1560	83 (111)
	16LV		RE503830		3—5%	1500	1560	83 (111)
	16MB		RE503737		3—5%	1800	1870	91 (122)
	16MC		RE504932		3—5%	1800	1870	91 (122)
	16MV		RE503736		3—5%	1800	1870	100 (134)
	16MW		RE504682		3—5%	1800	1870	100 (134)
4045TF270 (Tier 2)	163N/164X (12V)		RE519069		3—5%	1800	1870	74 (99)
	164Y (24V)		RE519070		3—5%	1800	1870	74 (99)
	164V (12V)		RE519029		STD	2500	2700	74 (99)
	164W (24V)		RE519030		STD	2500	2700	74 (99)
	164T (12V)		RE519027		STD	2200	2400	74 (99)
	164U (24V)		RE519028		STD	2200	2400	74 (99)
	164R (12V)		RE519025		STD	2500	2700	63 (84)
	164S (24V)		RE519026		STD	2500	2700	63 (84)
4045TF271 (Tier 2)					STD	2300	2500	74 (99)
4045TF275 (Tier 2)	161K, 163H (12V)	7288	RE515464	R518166	Electronic	2500	2700	86 (115)
	161L, 163L (24V)	7289	RE515464	R518166	Electronic	2500	2700	86 (115)
	161K, 163H (12V)	7290	RE515464		Electronic	2400	2600	82 (110)
	161L, 163L (24V)	7291	RE515464	R518166	Electronic	2400	2600	82 (110)
	161K, 163H (12V)	7292	RE515464	R518166	Electronic	1800	1870	84 (112)
	161L, 163L (24V)	7293	RE515464	R518166	Electronic	1800	1870	84 (112)
4045TFM50 (Non—Certified Marine)	16HM		RE503163		3—5%	1800	1870	65 (87)
	16HN		RE503162		3—5%	1800	1870	65 (87)

[a]Engine speeds listed are preset to factory specifications. Slow idle speed may be reset depending upon specific vehicle application requirements. Refer to your machine operator's manual for engine speeds that are different from those preset at the factory.

[b]Power ratings are for a bare engine without drag of cooling fan or accessories like air compressor. All power ratings are at full load at rated speed.

Continued on next page

RG,100,JW7641 –19–03JUN04–8/22

POWER RATINGS ON DYNAMOMETER FOR OEM ENGINES[a]								
Engine Model (Emission Certification)	**Fuel System Option Code**	**Electronic Software Option Codes**	**Original Injection Pump (Part No.)**	**Replaced By Injection Pump (Part No.)**	**Governor Regulation**	**Rated Speed at Full Load (rpm)[a]**	**Fast Idle (rpm)[a]**	**Power Rating kW (HP)[b]**
	16HP		RE503861		STD	2500	2700	101 (135)
	16HQ		RE503860		STD	2500	2700	101 (135)
	16LK		RE503160		STD	2600	2800	112 (150)
	16LL		RE503161		STD	2600	2800	112 (150)
4045TFM75 (Tier 2 Marine)	166M (12V)		RE518167	RE518086	Electronic	2300	2500	70 (94)
			RE518086		Electronic	2300	2500	70 (94)
	166N (24V)		RE518167	RE518086	Electronic	2300	2500	70 (94)
			RE518086		Electronic	2300	2500	70 (94)
	166M (12V)		RE518167	RE518086	Electronic	1500	1560	72 (97)
			RE518086		Electronic	1500	1560	72 (97)
	166N (24V)		RE518167	RE518086	Electronic	1500	1560	72 (97)
			RE518086		Electronic	1500	1560	72 (97)
	166M (12V)	72FP	RE518167	RE518086	Electronic	2400	2600	79 (106)
			RE518086		Electronic	2400	2600	79 (106)
	166N (24V)	72FQ	RE518167	RE518086	Electronic	2400	2600	79 (106)
			RE518086		Electronic	2400	2600	79 (106)
	166M (12V)		RE518167	RE518086	Electronic	1800	1870	86 (115)
			RE518086		Electronic	1800	1870	86 (115)
	166N (24V)		RE518167	RE518086	Electronic	1800	1870	86 (115)
			RE518086		Electronic	1800	1870	86 (115)
	166M (12V)	72FR	RE518167	RE518086	Electronic	2500	2700	90 (121)
			RE518086		Electronic	2500	2700	90 (121)
	166N (24V)	72FS	RE518167	RE518086	Electronic	2500	2700	90 (121)
			RE518086		Electronic	2500	2700	90 (121)
	166M (12V)	72EF	RE518167	RE518086	Electronic	2600	2800	101 (135)
			RE518086		Electronic	2600	2800	101 (135)
	166N (24V)	72EG	RE518167	RE518086	Electronic	2600	2800	101 (135)
			RE518086		Electronic	2600	2800	101 (135)
	168G (12V)	72EH	RE522339	RE518086	Electronic	1500	1560	56 (75)
			RE518086		Electronic	1500	1560	56 (75)
	168H (24V)	72EJ	RE518167	RE518086	Electronic	1500	1560	56 (75)
			RE518086		Electronic	1500	1560	56 (75)
	168J (12V)	72EK	RE518167	RE518086	Electronic	1800	1870	80 (107)
			RE518086		Electronic	1800	1870	80 (107)
	168K (24V)	72EL	RE518167	RE518086	Electronic	1800	1870	80 (107)
			RE518086		Electronic	1800	1870	80 (107)
4045TJ31						2300	2495	80 (108)

[a]Engine speeds listed are preset to factory specifications. Slow idle speed may be reset depending upon specific vehicle application requirements. Refer to your machine operator's manual for engine speeds that are different from those preset at the factory.

[b]Power ratings are for a bare engine without drag of cooling fan or accessories like air compressor. All power ratings are at full load at rated speed.

Continued on next page

POWER RATINGS ON DYNAMOMETER FOR OEM ENGINES[a]								
Engine Model (Emission Certification)	**Fuel System Option Code**	**Electronic Software Option Codes**	**Original Injection Pump (Part No.)**	**Replaced By Injection Pump (Part No.)**	**Governor Regulation**	**Rated Speed at Full Load (rpm)[a]**	**Fast Idle (rpm)[a]**	**Power Rating kW (HP)[b]**
4045HF120 (Non—Certified)	16GR		RE503050	RE506965	3—5%	1500	1560	102 (137)
	16GR		RE506965		3—5%	1500	1560	102 (137)
	16LW		RE503832	RE506966	3—5%	1500	1560	102 (137)
	16LW		RE506966		3—5%	1500	1560	102 (137)
4045HF150 (Tier 1)	1610		RE68826	RE505928	STD	2400	2600	104 (140)
	1610		RE505928		STD	2400	2600	104 (140)
	1611		RE60237		3—5%	1800	1870	95 (127)
	160B		RE68827		3—5%	1800	1870	95 (127)
	160C		RE69588	RE505959	STD	2400	2600	104 (140)
	160C		RE505959		STD	2400	2600	104 (140)
	16ME		RE503739		3—5%	1800	1870	123 (165)
	16MF		RE504966		3—5%	1800	1870	123 (165)
4045HF152 (Tier 1)	16RM		RE505959		STD	2400	2600	104 (140)
4045HF157 (Tier 1)	16GR		RE503050		3—5%	1500	1560	100 (134)
	16LW		RE503832		3—5%	1500	1560	100 (134)
4045HF158 (Tier 1)	16GR		RE503050		3—5%	1500	1560	100 (134)
	16LW		RE503832		3—5%	1500	1560	100 (134)
	16ME		RE503739		3—5%	1800	1870	123 (170)
	16MF		RE504698	RE504966	3—5%	1800	1870	123 (170)
	16MF		RE504966		3—5%	1800	1870	123 (170)
4045HF252 Non-Certified			RE522414		3—5%	3000	3120	125 (168)
			RE522698		3—5%	3000	3120	125 (168)
	169E		RE522414		3—5%	3000	3120	152 (204)
	169F		RE522698		3—5%	3000	3120	152 (204)
4045HF254			RE522933		3—5%	3000		152 (204)
4045HF275 (Tier 2)	161F, 163G (12V)	7262	RE507968	RE518167	Electronic	2400	2600	104 (140)
			RE518167		Electronic	2400	2600	104 (140)
	161G, 163K (24V)	7263	RE507968	RE518167	Electronic	2400	2600	104 (140)
			RE518167		Electronic	2400	2600	104 (140)

[a]Engine speeds listed are preset to factory specifications. Slow idle speed may be reset depending upon specific vehicle application requirements. Refer to your machine operator's manual for engine speeds that are different from those preset at the factory.

[b]Power ratings are for a bare engine without drag of cooling fan or accessories like air compressor. All power ratings are at full load at rated speed.

Continued on next page

POWER RATINGS ON DYNAMOMETER FOR OEM ENGINES[a]								
Engine Model (Emission Certification)	**Fuel System Option Code**	**Electronic Software Option Codes**	**Original Injection Pump (Part No.)**	**Replaced By Injection Pump (Part No.)**	**Governor Regulation**	**Rated Speed at Full Load (rpm)[a]**	**Fast Idle (rpm)[a]**	**Power Rating kW (HP)[b]**
	161F, 163G (12V)	7264	RE507968	RE518167	Electronic	2400	2600	93 (125)
			RE518167		Electronic	2400	2600	93 (125)
	161G, 163K (24V)	7265	RE507968	RE518167	Electronic	2400	2600	93 (125)
			RE518167		Electronic	2400	2600	93 (125)
	161F, 163G (12V)	7266	RE507968	RE518167	Electronic	2200	2400	93 (125)
			RE518167		Electronic	2200	2400	93 (125)
	161G, 163K (24V)	7267	RE507968	RE518167	Electronic	2200	2400	93 (125)
			RE518167		Electronic	2200	2400	93 (125)
	161F, 163G (12V)	7268	RE507968	RE518167	Electronic	2000	2100	86 (115)
			RE518167		Electronic	2000	2100	86 (115)
	161G, 163K (24V)	7269	RE507968	RE518167	Electronic	2000	2100	86 (115)
			RE518167		Electronic	2000	2100	86 (115)
	161F, 163G (12V)	7270	RE507968	RE518167	Electronic	1800	1870	108 (145)
			RE518167		Electronic	1800	1870	108 (145)
	161G, 163K (24V)	7271	RE507968	RE518167	Electronic	1800	1870	108 (145)
			RE518167		Electronic	1800	1870	108 (145)
	161F, 163G (12V)	7272	RE507968	RE518167	Electronic	1800	1870	117 (157)
			RE518167		Electronic	1800	1870	117 (157)
	161G, 163K (24V)	7273	RE507968	RE518167	Electronic	1800	1870	117 (157)
			RE518167		Electronic	1800	1870	117 (157)
	161F, 163G (12V)		RE507968	RE518167	Electronic	1500	1560	90 (120)
			RE518167		Electronic	1500	1560	90 (120)
	161G, 163K (24V)		RE507968	RE518167	Electronic	1500	1560	90 (120)
			RE518167		Electronic	1500	1560	90 (120)
	161G, 163K (24V)	72BB	RE507968	RE518167	Electronic	2400	2600	93 (125)

[a]Engine speeds listed are preset to factory specifications. Slow idle speed may be reset depending upon specific vehicle application requirements. Refer to your machine operator's manual for engine speeds that are different from those preset at the factory.

[b]Power ratings are for a bare engine without drag of cooling fan or accessories like air compressor. All power ratings are at full load at rated speed.

06
210
11

Continued on next page

RG,100,JW7641 –19–03JUN04–11/22

POWER RATINGS ON DYNAMOMETER FOR OEM ENGINES[a]								
Engine Model (Emission Certification)	**Fuel System Option Code**	**Electronic Software Option Codes**	**Original Injection Pump (Part No.)**	**Replaced By Injection Pump (Part No.)**	**Governor Regulation**	**Rated Speed at Full Load (rpm)[a]**	**Fast Idle (rpm)[a]**	**Power Rating kW (HP)[b]**
			RE518167		Electronic	2400	2600	93 (125)
	161F, 163G (12V)		RE507968	RE518167	Electronic	1500	1560	99 (133)
			RE518167		Electronic	1500	1560	99 (133)
	161G, 163K (24V)		RE507968	RE518167	Electronic	1500	1560	99 (133)
			RE518167		Electronic	1500	1560	99 (133)
	161F, 163G (12V)	72BD	RE507968	RE518167	Electronic	2200	2400	104 (140)
			RE518167		Electronic	2200	2400	104 (140)
	161G, 163K (24V)	72BE	RE507968	RE518167	Electronic	2200	2400	104 (140)
			RE518167		Electronic	2200	2400	104 (140)
4045HF475 (4-Valve) (Tier 2)	161V (12V)	72AT			Electronic	2400	2600	129 (173)
	161V (12V)	72AU			Electronic	2200	2400	119 (160)
	161V (12V)	72AV			Electronic	1800	1870	143 (192)
	161V (12V)	72AW			Electronic	1500	1560	120 (161)
	161V (12V)	72CX			Electronic	2200	2400	129 (173)
	165A (24V)	72CL			Electronic	2400	2600	129 (173)
	165A (24V)	72CY			Electronic	2200	2400	129 (173)
	165A (24V)	72CM			Electronic	2200	2400	119 (160)
	165A (24V)	72CN			Electronic	1800	1870	143 (192)
	165A (24V)	72CP			Electronic	1500	1560	120 (161)
4045HF485 (4-valve) (Tier 3)			(Information available by 2006)					
6068DF150 (Tier 1)	1613		RE59861	RE505929	STD	2500	2700	93 (125)
	1613		RE505929	RE509503	STD	2500	2700	93 (125)
	1613		RE509503		STD	2500	2700	93 (125)
	1678		RE60101	RE505960	STD	2500	2700	93 (125)
	1678		RE505960	RE509562	STD	2500	2700	93 (125)
	1678		RE509562		STD	2500	2700	93 (125)
	16LR		RE59861	RE505929	STD	2500	2700	93 (125)
	16LR		RE505929	RE509503	STD	2500	2700	93 (125)
	16LR		RE509503		STD	2500	2700	93 (125)
6068TF120 (Non—Certified)	16MX		RE503740		3—5%	1500	1560	105 (141)

[a]Engine speeds listed are preset to factory specifications. Slow idle speed may be reset depending upon specific vehicle application requirements. Refer to your machine operator's manual for engine speeds that are different from those preset at the factory.

[b]Power ratings are for a bare engine without drag of cooling fan or accessories like air compressor. All power ratings are at full load at rated speed.

Continued on next page

POWER RATINGS ON DYNAMOMETER FOR OEM ENGINES[a]								
Engine Model (Emission Certification)	**Fuel System Option Code**	**Electronic Software Option Codes**	**Original Injection Pump (Part No.)**	**Replaced By Injection Pump (Part No.)**	**Governor Regulation**	**Rated Speed at Full Load (rpm)[a]**	**Fast Idle (rpm)[a]**	**Power Rating kW (HP)[b]**
	16MY		RE505052		3—5%	1500	1560	105 (141)
6068TF150 (Tier 1)	1614		RE61669	RE69789	STD	2500	2700	127 (170)
	1614		RE69789		STD	2500	2700	127 (170)
	1680		RE60105	RE69790	STD	2500	2700	127 (170)
	1680		RE69790		STD	2500	2700	127 (170)
	1681		RE60107	RE67571	3—5%	1800	1870	112 (150)
	1681		RE67571		3—5%	1800	1870	112 (150)
	1688		RE67572		3—5%	1800	1870	112 (150)
	1696		RE67864	RE69787	STD	2500	2700	116 (155)
	1696		RE69787		STD	2500	2700	116 (155)
	1697		RE68740	RE69788	STD	2500	2700	116 (155)
	1697		RE69788		STD	2500	2700	116 (155)
	16BE		RE63559	RE501302	STD	2200	2400	117 (157)
	16BE		RE501302		STD	2200	2400	117 (157)
	16CN		RE501522	RE509681	STD	2100	2300	110 (148)
	16CN		RE509681		STD	2100	2300	110 (148)
	16CP		RE501523		STD	2200	2400	94 (126)
	16DK		RE70938		STD	2100	2300	96 (129)
	16DY		RE501758		STD	2500	2700	116 (155)
	16GM		RE502693		STD	2300	2500	110 (148)
	16GN		RE502704		STD	2400	2600	116 (155)
	16LS		RE67572		3—5%	1800	1870	112 (150)
	16MG		RE503742		3—5%	1800	1870	123 (165)
	16MH		RE504967		3—5%	1800	1870	123 (165)
6068TF151 (Tier 1)	1681		RE60107	RE67571	3—5%	1800	1870	112 (150)
	1681		RE67571		3—5%	1800	1870	112 (150)
	16NJ		RE505358		3—5%	1800	1870	112 (150)
6068TF152 (Tier 1)	1696		RE69787		STD	2500	2700	116 (155)
	16JU		RE69787		STD	2500	2700	116 (155)
6068TF157 (Tier 1)	16GS		RE503049		3—5%	1500	1560	120 (161)
	16LX		RE503834		3—5%	1500	1560	120 (161)
6068TF158 (Tier 1)	16GS		RE503049		3—5%	1500	1560	120 (161)
	16JV		RE503872		3—5%	1500	1560	100 (134)

[a]Engine speeds listed are preset to factory specifications. Slow idle speed may be reset depending upon specific vehicle application requirements. Refer to your machine operator's manual for engine speeds that are different from those preset at the factory.

[b]Power ratings are for a bare engine without drag of cooling fan or accessories like air compressor. All power ratings are at full load at rated speed.

Continued on next page

POWER RATINGS ON DYNAMOMETER FOR OEM ENGINES[a]								
Engine Model (Emission Certification)	**Fuel System Option Code**	**Electronic Software Option Codes**	**Original Injection Pump (Part No.)**	**Replaced By Injection Pump (Part No.)**	**Governor Regulation**	**Rated Speed at Full Load (rpm)[a]**	**Fast Idle (rpm)[a]**	**Power Rating kW (HP)[b]**
	16JW		RE503874		3—5%	1500	1560	100 (134)
	16MG		RE503742		3—5%	1800	1870	123 (165)
	16MH		RE504966	RE504967	3—5%	1800	1870	123 (165)
	16MH		RE504967		3—5%	1800	1870	123 (165)
	16MX		RE503740		3—5%	1500	1560	105 (141)
	16MY		RE504699	RE505052	3—5%	1500	1560	105 (141)
	16MY		RE505052		3—5%	1500	1560	105 (141)
6068TF159 (Tier 1)	16PD		RE70938		STD	2100	2250	96 (129)
6068TF220 (Non—Certified)	16GS		RE503049		3—5%	1500	1560	121 (162)
	16KK		RE502694		STD	2500	2700	127 (170)
	16LX		RE503836		3—5%	1500	1560	121 (162)
	16RK		RE506083		3—5%	2600	2700	138 (185)
	16RJ		RE506084		3—5%	2100	2200	172 (231)
	16SG		RE506625		3—5%	2100	2200	172 (231)
	16SH		RE506626		3—5%	2600	2700	138 (185)
	16ZL		RE509284		3—5%	2100	2200	172 (128)
	16ZM		RE509285		3—5%	2100	2200	172 (128)
	16ZN		RE509286		STD	2600	2800	138 (103)
	16ZP		RE509287		STD	2600	2800	138 (103)
6068TF250 (Tier 1)	1615		RE62366	RE69791	STD	2400	2600	138 (185)
	1615		RE69791		STD	2400	2600	138 (185)
	1619		RE67573		3—5%	1800	1870	124 (166)
	1668		RE59969[c]		STD	2400	2600	138 (185)
	1685		RE67574		3—5%	1800	1870	124 (166)
	1686		RE60131	RE69792	STD	2400	2600	138 (185)
	1686		RE69792		STD	2400	2600	138 (185)
	16CW		RE501344		STD	2200	2400	106 (142)
	16CX		RE70390		STD	2300	2500	128 (172)
	16LT		RE69791		STD	2400	2600	138 (185)
	16LU		RE67573		3—5%	1800	1870	124 (166)
	16MJ		RE503744		3—5%	1800	1870	142 (190)
	16MK		RE504701	RE504968	3—5%	1800	1870	142 (190)
	16MK		RE504968		3—5%	1800	1870	142 (190)
	16UG		RE504321		STD	2400	2600	149 (200)

[a]Engine speeds listed are preset to factory specifications. Slow idle speed may be reset depending upon specific vehicle application requirements. Refer to your machine operator's manual for engine speeds that are different from those preset at the factory.

[b]Power ratings are for a bare engine without drag of cooling fan or accessories like air compressor. All power ratings are at full load at rated speed.

[c]In-line fuel injection pump.

Continued on next page

POWER RATINGS ON DYNAMOMETER FOR OEM ENGINES[a]								
Engine Model (Emission Certification)	**Fuel System Option Code**	**Electronic Software Option Codes**	**Original Injection Pump (Part No.)**	**Replaced By Injection Pump (Part No.)**	**Governor Regulation**	**Rated Speed at Full Load (rpm)[a]**	**Fast Idle (rpm)[a]**	**Power Rating kW (HP)[b]**
			RE504321		3—5%	2400	2600	149 (200)
6068TF251 (Tier 1)	1615		RE62366		STD	2400	2600	138 (185)
	16ZH		RE62366		STD	2400	2600	138 (185)
6068TF254 (Tier 1)			RE522890		3—5%	3000		184 (247)
6068TF257 (Tier 1)	16GS		RE503049		3—5%	1500	1560	120 (161)
	16LX		RE503834		3—5%	1500	1560	120 (161)
6068TF258 (Tier 1)	16GS		RE503049		3—5%	1500	1560	120 (161)
	16LX		RE503834		3—5%	1500	1560	120 (161)
	16MJ		RE503744		3—5%	1800	1870	142 (190)
	16MK		RE504701	RE504968	3—5%	1800	1870	142 (190)
	16MK		RE504968		3—5%	1800	1870	142 (190)
6068TF275 (Tier 2)	161J, 163M (24V)	72AA	RE515679	RE518164	Electronic	2400	2600	123 (165)
			RE518164		Electronic	2400	2600	123 (165)
	161H, 163F (12V)	72AB	RE515679	RE518164	Electronic	2200	2400	101 (135)
			RE518164		Electronic	2200	2400	101 (135)
	161J, 163M (24V)	72AC	RE515679	RE518164	Electronic	2200	2400	101 (135)
			RE518164		Electronic	2200	2400	101 (135)
	161H, 163F (12V)	72AD	RE515679	RE518164	Electronic	2200	2400	112 (150)
			RE518164		Electronic	2200	2400	112 (150)
	161J, 163M (24V)	72AE	RE515679	RE518164	Electronic	2200	2400	112 (150)
			RE518164		Electronic	2200	2400	112 (150)
	161H, 163F (12V)	72AF	RE515679	RE518164	Electronic	2000	2100	104 (140)
			RE518164		Electronic	2000	2100	104 (140)
	161J, 163M (24V)	72AG	RE515679	RE518164	Electronic	2000	2100	104 (140)
			RE518164		Electronic	2000	2100	104 (140)
	161H, 163F (12V)	72AH	RE515679	RE518164	Electronic	1800	1870	123 (165)

[a]Engine speeds listed are preset to factory specifications. Slow idle speed may be reset depending upon specific vehicle application requirements. Refer to your machine operator's manual for engine speeds that are different from those preset at the factory.

[b]Power ratings are for a bare engine without drag of cooling fan or accessories like air compressor. All power ratings are at full load at rated speed.

Continued on next page

POWER RATINGS ON DYNAMOMETER FOR OEM ENGINES[a]								
Engine Model (Emission Certification)	**Fuel System Option Code**	**Electronic Software Option Codes**	**Original Injection Pump (Part No.)**	**Replaced By Injection Pump (Part No.)**	**Governor Regulation**	**Rated Speed at Full Load (rpm)[a]**	**Fast Idle (rpm)[a]**	**Power Rating kW (HP)[b]**
			RE518164		Electronic	1800	1870	123 (165)
	161J, 163M (24V)	72AJ	RE515679	RE518164	Electronic	1800	1870	123 (165)
			RE518164		Electronic	1800	1870	123 (165)
	161J, 163M (24V)	72BC	RE515679	RE518164	Electronic	2500	2700	127 (170)
			RE518164		Electronic	2500	2700	127 (170)
	161H, 163F (12V)	7294	RE515679	RE518164	Electronic	2500	2700	116 (155)
			RE518164		Electronic	2500	2700	116 (155)
	161J, 163M (24V)	7295	RE515679	RE518164	Electronic	2500	2700	116 (155)
			RE518164		Electronic	2500	2700	116 (155)
	161H, 163F (12V)	7296	RE515679	RE518164	Electronic	2500	2700	127 (170)
			RE518164		Electronic	2500	2700	127 (170)
	161J, 163M (24V)	7297	RE515679	RE518164	Electronic	2500	2700	127 (170)
			RE518164		Electronic	2500	2700	127 (170)
	161H, 163F (12V)	7298	RE515679	RE518164	Electronic	2400	2600	123 (165)
			RE518164		Electronic	2400	2600	123 (165)
	161H, 163F (12V)		RE515679	RE518164	Electronic	1500	1560	105 (141)
			RE518164		Electronic	1500	1560	105 (141)
	161J, 163M (24V)		RE515679	RE518164	Electronic	1500	1560	105 (141)
			RE518164		Electronic	1500	1560	105 (141)
6068TFM50 (Tier 1 Marine)	16FA (12V)		RE502619		STD	2600	2800	168 (225)
	16FB (24V)		RE502620		STD	2600	2800	168 (225)
	16FC (12V)		RE502621		STD	2400	2600	130 (175)
	16FD (24V)		RE502622		STD	2400	2600	130 (175)
	16FE (12V)		RE502623		3—5%	1800	1870	115 (154)
	16FF (24V)		RE502624		3—5%	1800	1870	115 (154)
6068TFM75 (Tier 2 Marine)	167Q (12V)	72GD	RE515887		Electronic	2400		118 (158)

[a]Engine speeds listed are preset to factory specifications. Slow idle speed may be reset depending upon specific vehicle application requirements. Refer to your machine operator's manual for engine speeds that are different from those preset at the factory.

[b]Power ratings are for a bare engine without drag of cooling fan or accessories like air compressor. All power ratings are at full load at rated speed.

Continued on next page

RG,100,JW7641 –19–03JUN04–16/22

POWER RATINGS ON DYNAMOMETER FOR OEM ENGINES[a]								
Engine Model (Emission Certification)	**Fuel System Option Code**	**Electronic Software Option Codes**	**Original Injection Pump (Part No.)**	**Replaced By Injection Pump (Part No.)**	**Governor Regulation**	**Rated Speed at Full Load (rpm)[a]**	**Fast Idle (rpm)[a]**	**Power Rating kW (HP)[b]**
	167R (24V)	72GE	RE515888		Electronic	2400		118 (158)
	167Q (12V)	72GF	RE515887		Electronic	2500		133 (178)
	167R (24V)	72GG	RE515888		Electronic	2500		133 (178)
	161E, 167Q (12V)	72EP	RE515887		Electronic	2600		150 (200)
	162K, 167R (24V)	72EQ	RE515888		Electronic	2600		150 (200)
6068TFM76 (Tier 2 Marine Gen Set)	167S	72ER	RE518165		Electronic	1500	1560	98 (131)
	167T	72ES	RE518165		Electronic	1500	1560	98 (131)
	167L	72ET	RE518164		Electronic	1800	1890	121 (162)
	167M	72EU	RE518164		Electronic	1800	1890	121 (162)
6068SFM50 (Tier 2 Marine)	161E 162K	7238, 7247			Electronic	2600	2700	224 (300)
	161E 162K	7248, 7249			Electronic	2500	2600	198 (266)
	161E 162K	7250, 7251			Electronic	2400	2500	175 (235)
	161E 162K	7252, 7253			Electronic	2300	2400	153 (205)
	161E 162K	7254, 7255			Electronic	2200	2300	134 (180)
6068TJ31						2200	2390	112 (150)
6068TJ32						2200	2390	133 (178)
6068HF120 (Non—Certified)	16GT		RE503051		3—5%	1500	1560	155 (208)
	16LY		RE503834	RE503836	3—5%	1500	1560	155 (208)
			RE503836		3—5%	1500	1560	155 (208)
	16RL		RE506085		3—5%	2100	2200	197 (264)
	16SJ		RE506627		3—5%	2100	2200	197 (264)
	16TP		RE506883		3—5%	1500	1560	183 (245)
	16TQ		RE506884		3—5%	1500	1560	183 (245)
	16ZQ		RE509288		3—5%	2100	2200	197 (264)
	16ZR		RE509289		3—5%	2100	2200	197 (264)

[a]Engine speeds listed are preset to factory specifications. Slow idle speed may be reset depending upon specific vehicle application requirements. Refer to your machine operator's manual for engine speeds that are different from those preset at the factory.

[b]Power ratings are for a bare engine without drag of cooling fan or accessories like air compressor. All power ratings are at full load at rated speed.

Continued on next page

POWER RATINGS ON DYNAMOMETER FOR OEM ENGINES[a]								
Engine Model (Emission Certification)	**Fuel System Option Code**	**Electronic Software Option Codes**	**Original Injection Pump (Part No.)**	**Replaced By Injection Pump (Part No.)**	**Governor Regulation**	**Rated Speed at Full Load (rpm)[a]**	**Fast Idle (rpm)[a]**	**Power Rating kW (HP)[b]**
6068HF150 (Tier 1)	1621		RE66575	RE505930	STD	2400	2600	157 (210)
	1621		RE505930		STD	2400	2600	157 (210)
	160D		RE69589	RE505962	STD	2400	2600	157 (210)
	160D		RE505962		STD	2400	2600	157 (210)
	16CY		RE501345		STD	2200	2400	143 (192)
	16ML		RE503746		3—5%	1800	1870	187 (251)
	16MM		RE504702	RE505049	3—5%	1800	1870	187 (251)
	16MM		RE505049		3—5%	1800	1870	187 (251)
	16TM		RE506885		3—5%	1800	1870	210 (282)
	16TN		RE506886		3—5%	1800	1870	210 (282)
6068HF157 (Tier 1)	16GT		RE503051		3—5%	1500	1560	153 (205)
	16LY		RE503836		3—5%	1500	1560	153 (205)
6068HF158 (Tier 1)	16GT		RE503051		3—5%	1500	1560	153 (205)
	16LY		RE503836		3—5%	1500	1560	153 (205)
	16ML		RE503746		3—5%	1800	1870	187 (251)
	16MM		RE504702	RE505049	3—5%	1800	1870	187 (251)
	16MM		RE505049		3—5%	1800	1870	187 (251)
6068HF250 (Tier 1)	1622		RE59521[c]		STD	2400	2600	168 (225)
	1623		RE66761[c]		3—5%	1800	1870	148 (198)
	16TV		RE506398		STD	2400	2550	168 (225)
6068HF252 (Tier 1)	169A		RE522694		3—5%	3000	3120	226 (303)
	168Z		RE522415		3—5%	3000	3120	226 (303)
6068HF254 (Tier 1)			RE522808		3—5%	3000		226 (303)
6068HF258 (Tier 1)	16TM (12V)		RE506885		3—5%	1800	1870	210 (282)
	16TN (24V)		RE506886		3—5%	1800	1870	210 (282)
	16TP (12V)		RE506883		3—5%	1500	1560	183 (245)
	16TQ (24V)		RE506884		3—5%	1500	1560	183 (245)
6068HF275 (Tier 2)	16YS (12V)	7201, 7222, 7230	RE506680		Electronic	2400	2600	168 (225)

[a]Engine speeds listed are preset to factory specifications. Slow idle speed may be reset depending upon specific vehicle application requirements. Refer to your machine operator's manual for engine speeds that are different from those preset at the factory.

[b]Power ratings are for a bare engine without drag of cooling fan or accessories like air compressor. All power ratings are at full load at rated speed.

[c]In-line fuel injection pump.

Continued on next page

POWER RATINGS ON DYNAMOMETER FOR OEM ENGINES[a]								
Engine Model (Emission Certification)	**Fuel System Option Code**	**Electronic Software Option Codes**	**Original Injection Pump (Part No.)**	**Replaced By Injection Pump (Part No.)**	**Governor Regulation**	**Rated Speed at Full Load (rpm)[a]**	**Fast Idle (rpm)[a]**	**Power Rating kW (HP)[b]**
	16YT (24V)	7202, 7223, 7231	RE506681	RE522826	Electronic	2400	2600	168 (225)
			RE522826		Electronic	2400	2600	168 (225)
	16YS (12V)	7203, 7224, 7232	RE506680		Electronic	2400	2600	149 (200)
	16YT (24V)	7204, 7225, 7233	RE506681	RE522826	Electronic	2400	2600	149 (200)
			RE522826		Electronic	2400	2600	149 (200)
	16YS (12V)	7207, 7228, 7236	RE506680			2200	2400	149 (200)
	16YT (24V)	7208, 7297, 7237	RE506681	RE522826		2200	2400	149 (200)
			RE522826			2200	2400	149 (200)
	16YS (12V)	7205, 7226, 7234	RE506680		Electronic	2400	2600	138 (185)
	16YT (24V)	7206, 7227, 7235	RE506681	RE522826	Electronic	2400	2600	138 (185)
			RE522826		Electronic	2400	2600	138 (185)
	16YS (12V)	7274	RE506680		Electronic	2400	2600	187 (250)
	16YT (24V)	7275	RE506681	RE522826	Electronic	2400	2600	187 (250)
			RE522826		Electronic	2400	2600	187 (250)
	16YS (12V)	7276	RE508732	RE518165	Electronic	2200	2400	168 (225)
			RE518165		Electronic	2200	2400	168 (225)
	16YT (24V)	7277	RE508732	RE518165	Electronic	2200	2400	168 (225)
			RE518165		Electronic	2200	2400	168 (225)
	16YS (12V)	7278	RE508732	RE518165	Electronic	2000	2100	157 (210)
			RE518165		Electronic	2000	2100	157 (210)
	16YT (24V)	7279	RE508732	RE518165	Electronic	2000	2100	157 (210)
			RE518165		Electronic	2000	2100	157 (210)
	161N, 163E (12V)	7280	RE508732	RE518165	Electronic	2000	2100	129 (173)
			RE518165		Electronic	2000	2100	129 (173)

[a]Engine speeds listed are preset to factory specifications. Slow idle speed may be reset depending upon specific vehicle application requirements. Refer to your machine operator's manual for engine speeds that are different from those preset at the factory.

[b]Power ratings are for a bare engine without drag of cooling fan or accessories like air compressor. All power ratings are at full load at rated speed.

Continued on next page

RG,100,JW7641 –19–03JUN04–19/22

POWER RATINGS ON DYNAMOMETER FOR OEM ENGINES[a]								
Engine Model (Emission Certification)	**Fuel System Option Code**	**Electronic Software Option Codes**	**Original Injection Pump (Part No.)**	**Replaced By Injection Pump (Part No.)**	**Governor Regulation**	**Rated Speed at Full Load (rpm)[a]**	**Fast Idle (rpm)[a]**	**Power Rating kW (HP)[b]**
	161Q, 163J (24V)	7281	RE508732	RE518165	Electronic	2000	2100	129 (173)
			RE518165		Electronic	2000	2100	129 (173)
	161N, 163E (12V)	7282	RE508732	RE518165	Electronic	1800	1870	164 (220)
			RE518165		Electronic	1800	1870	164 (220)
	161Q, 163J (24V)	7283	RE508732	RE518165	Electronic	1800	1870	164 (220)
			RE518165		Electronic	1800	1870	164 (220)
	16YS (12V)	7284	RE506680		Electronic	1800	1870	187 (250)
	16YT (24V)	7285	RE506681	RE522826	Electronic	1800	1870	187 (250)
			RE522826		Electronic	1800	1870	187 (250)
	16YS, 162B (12V)	7286	RE508732	RE518165	Electronic	1800	1870	210 (282)
			RE518165		Electronic	1800	1870	210 (282)
	16YT, 162C (24V)	7287	RE508732	RE518165	Electronic	1800	1870	210 (282)
			RE518165		Electronic	1800	1870	210 (282)
	16YS (12V)		RE508732/ RE506680		Electronic	1500/ 2400	2600	138 (185) / 187 (250)
	16YT (24V)		RE508733/ RE508732		Electronic	1500/ 2000	2100	138 (185) / 157 (210)
	16YS (12V)		RE506680		Electronic	1500	1560	161 (216)
	16YT (24V)		RE506681	RE522826	Electronic	1500	1560	161 (216)
			RE522826		Electronic	1500	1560	161 (216)
	16YS (12V)		RE506680		Electronic	1500	1560	175 (235)
	16YT (24V)		RE506681	RE522826	Electronic	1500	1560	175 (235)
			RE522826		Electronic	1500	1560	175 (235)
6068HF475 (4-Valve) (Tier 2)	161U (12V)	72AP			Electronic	2400	2600	205 (275)
	165B (24V)	72CQ			Electronic	2400	2600	205 (275)
	161U (12V)	72AQ			Electronic	2200	2400	187 (250)
	165B (24V)	72CR			Electronic	2200	2400	187 (250)
	161U (12V)	72AR			Electronic	1800	1870	234 (314)
	165B (24V)	72CS			Electronic	1800	1870	234 (314)
	161U (12V)	72AS			Electronic	1500	1560	207 (278)
	165B (24V)	72CT			Electronic	1500	1560	207 (278)

[a]Engine speeds listed are preset to factory specifications. Slow idle speed may be reset depending upon specific vehicle application requirements. Refer to your machine operator's manual for engine speeds that are different from those preset at the factory.

[b]Power ratings are for a bare engine without drag of cooling fan or accessories like air compressor. All power ratings are at full load at rated speed.

Continued on next page

POWER RATINGS ON DYNAMOMETER FOR OEM ENGINES[a]								
Engine Model (Emission Certification)	**Fuel System Option Code**	**Electronic Software Option Codes**	**Original Injection Pump (Part No.)**	**Replaced By Injection Pump (Part No.)**	**Governor Regulation**	**Rated Speed at Full Load (rpm)[a]**	**Fast Idle (rpm)[a]**	**Power Rating kW (HP)[b]**
6068HF485 (4-valve)(Tier 3)	167W (12V)	72JJ			Electronic	2200	2400	134 (180)
	167W (24V)	72JK			Electronic	2200	2400	134 (180)
	167W (12V)	72JC			Electronic	2400	2600	138 (185)
	167W (24V)	72JD			Electronic	2400	2600	138 (185)
	167W (12V)	72JE			Electronic	2200	2400	138 (185)
	167W (24V)	72JF			Electronic	2200	2400	138 (185)
	167W (12V)	72JG			Electronic	2200	2400	138 (185)
	167W (24V)	72JH			Electronic	2200	2400	138 (185)
	167W (12V)	72HY			Electronic	2000	2100	144 (193)
	167W (24V)	72HZ			Electronic	2000	2100	144 (193)
	167W (12V)	72JA			Electronic	2000	2100	144 (193)
	167W (24V)	72JB			Electronic	2000	2100	144 (193)
	167W (12V)	72HS			Electronic	2400	2600	149 (200)
	167W (24V)	72HT			Electronic	2400	2600	149 (200)
	167W (12V)	72HU			Electronic	2200	2400	149 (200)
	167W (24V)	72HV			Electronic	2200	2400	149 (200)
	167W (12V)	72HW			Electronic	2200	2400	149 (200)
	167W (24V)	72HX			Electronic	2200	2400	149 (200)
	167W (12V)	72HN			Electronic	2000	2100	162 (217)
	167W (24V)	72HP			Electronic	2000	2100	162 (217)
	167W (12V)	72HQ			Electronic	2000	2100	162 (217)
	167W (24V)	72HR			Electronic	2000	2100	162 (217)
	167W (12V)	72HG			Electronic	2400	2600	168 (225)
	167W (24V)	72HH			Electronic	2400	2600	168 (225)
	167W (12V)	72HJ			Electronic	2200	2400	168 (225)
	167W (24V)	72HK			Electronic	2200	2400	168 (225)
	167W (12V)	72HL			Electronic	2200	2400	168 (225)
	167W (24V)	72HM			Electronic	2200	2400	168 (225)
	167W (12V)	72HE			Electronic	2000	2100	181 (243)
	167W (24V)	72HF			Electronic	2000	2100	181 (243)
	167W (12V)	72HA			Electronic	2400	2600	187 (250)
	167W (24V)	72HB			Electronic	2400	2600	187 (250)
	167W (12V)	72HC			Electronic	2200	2400	187 (250)
	167W (24V)	72HD			Electronic	2200	2400	187 (250)
	167W (12V)	72GY			Electronic	2400	2600	205 (275)
	167W (24V)	72GZ			Electronic	2400	2600	205 (275)
	167W (12V)	72JN			Electronic	1800	1870	175 (235)

[a]Engine speeds listed are preset to factory specifications. Slow idle speed may be reset depending upon specific vehicle application requirements. Refer to your machine operator's manual for engine speeds that are different from those preset at the factory.

[b]Power ratings are for a bare engine without drag of cooling fan or accessories like air compressor. All power ratings are at full load at rated speed.

Continued on next page

POWER RATINGS ON DYNAMOMETER FOR OEM ENGINES[a]								
Engine Model (Emission Certification)	**Fuel System Option Code**	**Electronic Software Option Codes**	**Original Injection Pump (Part No.)**	**Replaced By Injection Pump (Part No.)**	**Governor Regulation**	**Rated Speed at Full Load (rpm)[a]**	**Fast Idle (rpm)[a]**	**Power Rating kW (HP)[b]**
	167W (24V)	72JP			Electronic	1800	1870	175 (235)
	167W (12V)	72JL			Electronic	1800	1870	234 (314)
	167W (24V)	72JM			Electronic	1800	1870	234 (314)
[a]Engine speeds listed are preset to factory specifications. Slow idle speed may be reset depending upon specific vehicle application requirements. Refer to your machine operator's manual for engine speeds that are different from those preset at the factory.								
[b]Power ratings are for a bare engine without drag of cooling fan or accessories like air compressor. All power ratings are at full load at rated speed.								

RG,100,JW7641 –19–03JUN04–22/22

06
210
22

Intake Manifold Pressure (Turbocharger Boost) Specifications

NOTE: This test of turbocharger boost is a good indicator of whether a turbocharged engine is performing at its full rated power. For test procedure, see MEASURE INTAKE MANIFOLD PRESSURE (TURBOCHARGER BOOST/POWER CHECK) in Group 150.

Engine power ratings specify flywheel power for a bare engine without the drag effect of a cooling fan or other accessories like an air compressor.

Power ratings for agricultural tractors also list observed PTO pwer, at rated speed, under full load.

Altitude, fuel temperature, air temperature, and humidity may affect engine performance. See EFFECTS OF ALTITUDE AND TEMPERATURE ON ENGINE PERFORMANCE later in this group.

For CONSTRUCTION AND FORRESTRY and OEM SPECIFICATIONS, see INTAKE MANIFOLD PRESSURE (TURBOCHARGER BOOST) SPECIFICATIONS (CONTINUED) in this group.

Some specifications were not available at time of printing

TURBO BOOST PRESSURES (JOHN DEERE AGRICULTURAL EQUIPMENT)

Machine Model	Engine Model	Rated Power at Full Load Rated Speed kW (hp)	Full Load Rated Speed rpm	Turbo Boost Pressure at Full Load Rated Speed kPa (bar) (psi)
Bell Equipment, South Africa				
884 Cane Loader	CD4045TBE50	66(89)	2200	56—68 kPa (0.6—0.7 bar) 8—10 psi
904 Haul Tractor	CD4045TBE51	66 (89)	2200	56—68 kPa (0.6—0.7 bar) 8—10 psi
1266 Haul Tractor	CD6068TBE50	94 (126)	2200	52—64 kPa (0.5—0.6 bar) 8—9 psi
1866 Haul Tractor	CD6068TBE51	138 (185)	2400	110—134 kPa (1.1—1.2 bar) 16—18 psi
2256 Haul Tractor	CD6068HBE50	168 (225)	2400	117—143 kPa (1.2—1.4 bar) 17—21 psi
Des Moines, Iowa				
4700 Sprayer (138 kW)	T06068TN050	138 (185)	2400	113—137 kPa (1.1—1.4 bar) (16—20 psi)
	PE6068TN050	138 (185)	2400	113—137 kPa (1.1—1.4 bar) (16—20 psi)

Continued on next page

TURBO BOOST PRESSURES (JOHN DEERE AGRICULTURAL EQUIPMENT)				
Machine Model	**Engine Model**	**Rated Power at Full Load Rated Speed kW (hp)**	**Full Load Rated Speed rpm**	**Turbo Boost Pressure at Full Load Rated Speed kPa (bar) (psi)**
	PE6068TN053	138 (185)	2400	144—176 kPa (1.4—1.8 bar) (21—25 psi)
	T06068TN053	138 (185)	2400	144—176 kPa (1.4—1.8 bar) (21—25 psi)
4700 Sprayer (149 kW)	PE6068TN052	149 (200)	2400	144—176 kPa (1.4—1.8 bar) (21—25 psi)
4710 Sprayer	PE6068TN052	149 (200)	2400	144—176 kPa (1.4—1.8 bar) (21—25 psi)
4720 Sprayer	PE6068HN051	168 (225)	2400	104—127 kPa (1.0—1.3 bar) (15—18 psi)
6700 Sprayer	T04045TN050	79 (106)	2200	72—88 kPa (0.7—0.9 bar) (10—13 psi)
	PE4045TN050	79 (106)	2200	72—88 kPa (0.7—0.9 bar) (10—13 psi)
7455 Cotton Stripper	T06068TN051	117 (157)	2200	79—97 kPa (0.8—1.0 bar) (12—14 psi)
	PE6068TN051	117 (157)	2200	79—97 kPa (0.8—1.0 bar) (12—14 psi)
7460 Cotton Stripper	PE6068TN054	129 (173)	2200	103—126 kPa (1.0—1.3 bar) (15—18 psi)
9935 Cotton Picker	T06068TN051	117 (157)	2200	79—97 kPa (0.8—1.0 bar) (12—14 psi)
	PE6068TN051	117 (157)	2200	79—97 kPa (0.8—1.0 bar) (12—14 psi)
East Moline, Illinois				
9400 Combine	T06068HH050	138 (185)	2200	93—113 kPa (0.9—1.1 bar) (14—16 psi)
9410 Combine	T06068HH051	143 (192)	2200	94—116 kPa (0.9—1.2 bar) (14—17 psi)
9450 Combine	T06068HH052	143 (192)	2200	85—105 kPa (0.9—1.1 bar) (13—16 psi)
	PE6068HH052	143 (192)	2200	85—105 kPa (0.9—1.1 bar) (13—16 psi)
9550 Combine (Low Power)	PE6068HH054	198 (265)	2400	132—162 kPa (1.3—1.6 bar) (19—23 psi)
9550/9950SH Combine (High Power)	PE6068HH055	208 (279)	2400	140—172 kPa (1.4—1.7 bar) (20—26 psi)
9560 Combine (Low Power)	PE6068HH054	198 (265)	2400	132—162 kPa (1.3—1.6 bar) (19—23 psi)
9560 Combine (High Power)	PE6068HH055	208 (279)	2400	140—172 kPa (1.4—1.7 bar) (20—26 psi)
9965 Peanut Combine	PE6068HH057	183 (245)	2400	112—137 kPa (1.1—1.4 bar) (16—20 psi)
Horizontina, Brazil				
1165 Combine	J06068TCQ11	112 (150)	2200	62—76kPa (0.6—0.8 bar) (9—11 psi)
1170 Combine	CD6068TCQ50	133 (178)	2200	95—117 kPa (1.0—1.2 bar) (14—17 psi)
1175 Combine	J06068TCQ12	133 (178)	2200	103—126 kPa (1.0—1.3 bar) (15—18 psi)
1450 Combine	J06068TCQ01	133 (178)	2200	103—126 kPa (1.0—1.3 bar) (15—18 psi)
1450CWS/WTS Combine	CD6068HCQ60	149 (200)	2400	107—131 kPa (1.1—1.3 bar) (16—19 psi)
1650 CTS Combine	J06068HCQ02	175 (234)	2200	134—164 kPa (1.4—1.7 bar) (20—24 psi)
1550CWS/WTS Combine	CD6068HCQ61 J06086	182 (244)	2400	130—160 kPa (1.3—1.6 bar) (19—23 psi)
5705 Tractor	J04045TCQ02	60 (80)	2400	67—81 kPa (0.7—0.8 bar) (9—11 psi)
6405 Tractor	J04045TCQ01	79 (106)	2300	89—109 kPa (0.9—1.1 bar) (13—16 psi)
6415 Tractor	J04045TCQ03	80 (106)	2300	90—110 kPa (0.9—1.1 bar) (13—16 psi)

Continued on next page

TURBO BOOST PRESSURES (JOHN DEERE AGRICULTURAL EQUIPMENT)

Machine Model	Engine Model	Rated Power at Full Load Rated Speed kW (hp)	Full Load Rated Speed rpm	Turbo Boost Pressure at Full Load Rated Speed kPa (bar) (psi)
6605 Tractor	J06068TCQ02	89 (119)	2300	54-—66 kPa (0.5—0.6 bar) (7—8 psi)
6615 Tractor	J06068TCQ13	89 (119)	2300	54—66 kPa (0.5—0.7bar) (8—10 psi)
7505 Tractor	J06068TCQ03	106 (192)	2100	61—75 kPa (0.6—0.7 bar) (8—10 psi)
7515 Tractor	J06068TCQ14	106 (192)	2100	61—75 kPa (0.6—0.7 bar) (9—11 psi)
7715, 7815 Tractors	J06068HCQ01	149 (200)	2100	104—128 kPa (1.1—1.3 bar) (16—19 psi)
Jiamusi, China				
1075 Combine	CD6068TYC50J06068TYC50	116 (157)	2200	Borg Warner/Schwitzer Turbo: 94—114 kPa (1.0—1.2 bar) (14—17 psi)
3518 Combine	CD6068TYC51	149 (200)	2400	AiResearch/Garrett Turbo: 142—174 kPa (1.4—1.7 bar) (21—25 psi) Borg Warner/Schwitzer Turbo: 161—197 kPa (1.6—2.0 bar) (23—29 psi)
	CD6068HYC50	160 (215)	2400	106—130 kPa (1.1—1.3 bar) (15—18 psi)
Zweibrucken, Germany				
2254 Combine	CD6068HZ050	144 (193)	2200	94—116 kPa (0.9—1.2 bar) (14—17 psi)
3200/3400 Telehandler	CD4045TZ250	79 (106)	2200	68—82 kPa (0.7—0.8 bar) (10—12 psi)
3215/3415 Telehandler (European Version)	CD4045HZ275	82 (110)	2200	70—86 kPa (0.7—0.9 bar) (10—12 psi)
	CD4045TZ270	74 (99)	2200	76—94 kPa (0.7—0.8 bar) (10—12 psi)
3215/3415 Telehandler (North American Version)	CD4045HZ275	81 (109)	2200	67—82 kPa (0.7—0.9 bar) (11—13 psi)
	CD4045TZ270	74 (99)	2200	76—94 kPa (0.7—0.8 bar) (10—12 psi)
3220/3420 Telehandler (European Version)	CD4045HZ275	89 (119)	2200	82—99 kPa (0.8—1.0 bar) (10—14 psi)
3220/3420 Telehandler (North American Version)	CD4045HZ275	88 (118)	2200	82—99 kPa (0.8—1.0 bar) (10—14 psi)
3800 Telehandler, Articulated	CD4045HZ050	86 (115)	2200	81—99 kPa (0.8—1.0 bar) (12—14 psi)
	CD4045HZ060	86 (115)	2200	81—99 kPa (0.8—1.0 bar) (12—14 psi)
9540/9540 Hillmaster Combine	CD6068HZ060	162 (217)	2400	108—132 kPa (1.1—1.3 bar) (16—19 psi)
	CD6068HZ480	162 (217)	2400	Not Available
9560/9560HM Combine	CD6068HZ470	182 (244)	2400	117—143 kPa (1.2—1.4 bar) (17—21 psi)
	CD6068HZ481	183 (245)	2400	170—208 kPa (1.7—2.1 bar) (25—30 psi)
Ottumwa, Iowa				
4890 Windrower	T04045TE050	75 (100)	2500	81—99 kPa (0.8—1.0 bar) (12—14 psi)
	PE4045TE050	75 (100)	2500	81—99 kPa (0.8—1.0 bar) (12—14 psi)
4895 Windrower	T04045TE051	86 (115)	2500	114—140 kPa (1.1—1.4 bar) (16—20 psi)
	PE4045TE051	86 (115)	2500	114—140 kPa (1.1—1.4 bar) (16—20 psi)

Continued on next page

TURBO BOOST PRESSURES (JOHN DEERE AGRICULTURAL EQUIPMENT)				
Machine Model	**Engine Model**	**Rated Power at Full Load Rated Speed kW (hp)**	**Full Load Rated Speed rpm**	**Turbo Boost Pressure at Full Load Rated Speed kPa (bar) (psi)**
4990 Windrower	T06068TE050	128 (172)	2300	101—112 kPa (1.0—1.1 bar) (15—17 psi)
	PE6068TE050	128 (172)	2300	101—112 kPa (1.0—1.1 bar) (15—17 psi)
4995 Windrower	PE6068TE051	136 (182)	2300	103—126 kPa (1.0—1.3 bar) (15—18 psi)
Waterloo, Iowa				
7210 (SYNCROPLUS™) Tractor	T06068TRW53	71 (95) PTO 88 (118) Eng.	2100	49—61 kPa (0.5—0.6 bar) (7—9 psi)
7210 (POWRQUAD™) Tractor	T06068TRW50	71 (95) PTO 88 (118) Eng.	2100	49—61 kPa (0.5—0.6 bar) (7—9 psi)
	PE6068TRW50	71 (95) PTO 88 (118) Eng.	2100	49—61 kPa (0.5—0.6 bar) (7—9 psi)
7220 Tractor	CD6068TRW01	71 (95) PTO 87 (117) Eng.	2300	55—67 kPa (0.5—0.7 bar) (8—10 psi)
	PE6068TRW01	71 (95) PTO 87 (117) Eng.	2300	55—67 kPa (0.5—0.7 bar) (8—10 psi)
	PE6068HRW59	71 (95) PTO 89 (119) Eng.	2300	47—57 kPa (0.5—0.6 bar) (7—8 psi)
7220 IVT Tractor	PE6068HRW61	71 (95) PTO 87 (117) Eng.	2300	68—84 kPa (0.7—0.8 bar) (10—12 psi)
7320 Tractor	CD6068HRW01	78 (105) PTO 97 (130) Eng.	2300	54—66 kPa (0.5—0.6 bar) (8—9 psi)
	PE6068HRW01	78 (105) PTO 97 (130) Eng.	2300	54—66 kPa (0.5—0.6 bar) (8—9 psi)
	PE6068HRW59	78 (105) PTO 96 (129) Eng.	2300	52—64 kPa (0.5—0.6 bar) (8—9 psi)
7320 IVT Tractor	PE6068HRW61	78 (105) PTO 96 (129) Eng.	2300	75—91 kPa (0.8—0.9 bar) (11—13 psi)
7410 (SYNCROPLUS™) Tractor	T06068TRW54	79 (105) PTO 96 (129) Eng.	2100	58—70 kPa (0.6—0.7 bar) (8—10 psi)
	PE6068TRW54	79 (105) PTO 96 (129) Eng.	2100	58—70 kPa (0.6—0.7 bar) (8—10 psi)
7410 (POWRQUAD™) Tractor	T06068TRW51	79 (105) PTO 96 (129) Eng.	2100	58—70 kPa (0.6—0.7 bar) (8—10 psi)
	PE6068TRW51	79 (105) PTO 96 (129) Eng.	2100	58—70 kPa (0.6—0.7 bar) (8—10 psi)
7420 Tractor	CD6068HRW01	85 (115) PTO 104 (139) Eng.	2100	58—70 kPa (0.6—0.7 bar) (8—10 psi)
	PE6068HRW01	85 (115) PTO 104 (139) Eng.	2100	58—70 kPa (0.6—0.7 bar) (8—10 psi)

06
210
26

SYNCROPLUS is a trademark of Deere & Company
POWRQUAD is a trademark of Deere & Company

Continued on next page

TURBO BOOST PRESSURES (JOHN DEERE AGRICULTURAL EQUIPMENT)				
Machine Model	**Engine Model**	**Rated Power at Full Load Rated Speed kW (hp)**	**Full Load Rated Speed rpm**	**Turbo Boost Pressure at Full Load Rated Speed kPa (bar) (psi)**
	PE6068HRW60	85 (115) PTO 104 (139) Eng.	2100	62—75 kPa (0.6—0.8 bar) (9—11 psi)
7510 (POWRQUAD™) Tractor	T06068TRW70	86 (115) PTO 105 (141) Eng.	2100	65—79 kPa (0.6—0.8 bar) (9—11 psi)
	PE6068TRW70	86 (115) PTO 105 (141) Eng.	2100	65—79 kPa (0.6—0.8 bar) (9—11 psi)
7520 Tractor	CD6068HRW01	92 (125) PTO 116 (156) Eng.	2100	66—80 kPa (0.7—0.8 bar) (9—11 psi)
	PE6068HRW01	92 (125) PTO 116 (156) Eng.	2100	58—70 kPa (0.6—0.7 bar) (8—10 psi)
	PE6068HRW60	92 (125) PTO 116 (156) Eng.	2100	73—89 kPa (0.7—0.9 bar) (11—13 psi)
7610 Tractor	T06068TRW52	90 (120) PTO 105 (140) Eng.	2100	65—79 kPa (0.7—0.8 bar) (9—11 psi)
	PE6068TRW52	90 (120) PTO 105 (140) Eng.	2100	65—79 kPa (0.7—0.8 bar) (9—11 psi)
	T06068TRW72	90 (120) PTO 106 (142) Eng.	2100	65—79 kPa (0.7—0.8 bar) (9—11 psi)
	PE6068TRW72	90 (120) PTO 106 (142) Eng.	2100	65—79 kPa (0.7—0.8 bar) (9—11 psi)
7720 Tractor	PE6068HRW54 (4-Valve) (Tier 2)	104 (140) PTO 127 (170) Eng.	2100	94—114 kPa (0.9—1.1 bar) (14—17 psi)
7810 Tractor (Export-Brazil)	PE6068TRW73	112 (150) PTO 131 (175) Eng.	2100	102—124 kPa (1.0—1.2 bar) (15—18 psi)
7815 Tractor (Export-Brazil)	PE6068HRW63	149 (200) PTO .....Eng.	2300	109—134 kPa (1.1—1.3 bar) (16—19 psi)
7820 Tractor (Export-Europe)	PE6068HRW54 (4-Valve) (Tier 2)	115 (155) PTO 140 (188) Eng.	2100	106—130 kPa (1.1—1.3 bar) (15—19 psi)
Mannheim, Germany (European Market)				
3410 Tractor	CD4045TRT50	67 (90) Eng.	2350	63—78 kPa (0.6—0.8 bar) (9—11 psi)
5720 Tractor	CD4045TL273	60 (80) Eng.	2300	58—70 kPa (0.6—0.7 bar) (8—10 psi)
5820 Tractor	CD4045TL274	66 (89) Eng.	2300	58—70 kPa (0.6—0.7 bar) (8—10 psi)
6020SE Tractor	CD4045TL270	58 (78) Eng.	2300	45—55 kPa (0.4—0.5 bar) (7—8 psi)
6110 Tractor (Direct Fan Drive)	CD4045TL058	58 (79) Eng.	2300	51—63 kPa (0.5—0.6 bar) (7—9 psi)
6110 Tractor (Viscous Fan Drive)	CD4045TL050	59 (80) Eng.	2300	51—63 kPa (0.5—0.6 bar) (7—9 psi)
6120 Tractor	CD4045TL070	63 (84) Eng.	2300	57—70 kPa (0.6—0.7 bar) (8—10 psi)
6120 Tractor (Premium)	CD4045TL271	63 (85) Eng.	2300	52—64 kPa (0.5—0.6 bar) (7—9 psi)

POWRQUAD is a trademark of Deere & Company

Continued on next page

TURBO BOOST PRESSURES (JOHN DEERE AGRICULTURAL EQUIPMENT)

Machine Model	Engine Model	Rated Power at Full Load Rated Speed kW (hp)	Full Load Rated Speed rpm	Turbo Boost Pressure at Full Load Rated Speed kPa (bar) (psi)
6120SE Tractor	CD4045TL271	63 (84) Eng.	2300	52—64 kPa (0.5—0.6 bar) (7—9 psi)
6205 Tractor	CD4045TL064	78 (105) Eng.	2300	68—83 kPa (0.7—0.8 bar) (10—12 psi)
6210 Tractor (Direct Fan Drive)	CD4045TL059	65 (88) Eng.	2300	58—71 kPa (0.6—0.7 bar) (8—10 psi)
6210 Tractor (Viscous Fan Drive)	CD4045TL051	66 (90) Eng.	2300	58—71 kPa (0.6—0.7 bar) (8—10 psi)
6215 Tractor (Classic)	CD4045TL072	87 (117) Eng.	2300	86—105 kPa (0.9—1.0 bar) (12—15 psi)
	CD4045TL071	69 (93) Eng.	2300	67—81 kPa (0.7—0.8 bar) (10—12 psi)
	CD4045TL272 (Tier 2)	69 (93) Eng.	2300	61—75 kPa (0.6—0.7 bar) (9—11 psi)
6220 Tractor	CD4045TL071	65 (87) Eng.	2300	69—84 kPa (0.7—0.8 bar) (10—12 psi)
6220 Tractor (Premium)	CD4045TL272 (Tier 2)	69 (94) Eng.	2300	61—75 kPa (0.6—0.7 bar) (9—11 psi)
6220SE Tractor	CD4045TL272	69 (92) Eng.	2300	61—75 kPa (0.6—0.7 bar) (9—11 psi)
6310 Tractor (Direct Fan Drive)	CD4045TL060	73 (99) Eng.	2300	68—83 kPa (0.7—0.8 bar) (10—12 psi)
6310 Tractor (Viscous Fan Drive)	CD4045TL052	74 (100) Eng.	2300	68—83 kPa (0.7—0.8 bar) (10—12 psi)
6310 Tractor (ECU Level 4)	CD4045TLA50	77 (103) Eng.	2300	68—83 kPa (0.7—0.8 bar) (10—12 psi)
6320 Tractor	CD4045HL072	77 (103) Eng.	2300	65—79 kPa (0.6—0.8 bar) (9—11 psi)
6320 IVT Tractor	CD4045HLA70	77 (103) Eng.	2300	65—79 kPa (0.6—0.8 bar) (9—11 psi)
6320 Tractor (Premium)	CD4045HL472	77 (103) Eng.	2300	63—78 kPa (0.6—0.8 bar) (9—11 psi)
6320SE Tractor	CD4045TL073	77 (103) Eng.	2300	76—92 kPa (0.8—0.9 bar) (11—13 psi)
	CD4045HL270	77 (103) Eng.	2300	63—78 kPa (0.6—0.8 bar) (9—11 psi)
6410 Tractor (Direct Fan Drive)	CD4045TL061	76 (103) Eng.	2300	69—84 kPa (0.7—0.8 bar) (10—12 psi)
6410 Tractor (Viscous Fan Drive)	CD4045TL053	77 (105) Eng.	2300	69—84 kPa (0.7—0.8 bar) (10—12 psi)
6410 Tractor (ECU Level 4)	CD4045TLA51	77 (103) Eng.	2300	69—84 kPa (0.7—0.8 bar) (10—12 psi)
6420 Tractor	CD4045HL070	84 (113) Eng.	2300	71—88 kPa (0.7—0.9 bar) (10—13 psi)
6420 IVT Tractor	CD4045HLA72	84 (113) Eng.	2300	71—88 kPa (0.7—0.9 bar) (10—13 psi)
6420 Tractor (Premium)	CD4045HL473 (Tier 2)	85 (115) Eng.	2300	70—86 kPa (0.7—0.9 bar) (10—12 psi)
6420S Tractor	CD4045HLA73	92 (123) Eng.	2300	79—97 kPa (0.8—1.0 bar) (11—14 psi)
6420SE Tractor	CD4045HL271 (Tier 2)	84 (113) Eng.	2300	72—88 kPa (0.7—0.9 bar) (10—13 psi)

Continued on next page

TURBO BOOST PRESSURES (JOHN DEERE AGRICULTURAL EQUIPMENT)				
Machine Model	**Engine Model**	**Rated Power at Full Load Rated Speed kW (hp)**	**Full Load Rated Speed rpm**	**Turbo Boost Pressure at Full Load Rated Speed kPa (bar) (psi)**
6520 Tractor (Premium)	CD6068HL470 (4-Valve) (Tier 2)	85 (115) Eng.	2300	50—60 kPa (0.5—0.6 bar) (7—9 psi)
	CD6068HL475 (4-Valve) (Tier 2)	89 (119) Eng.	2300	58—70 kPa (0.6—0.7 bar) (8—10 psi)
6520SE Tractor	CD6068HL270	86 (115) Eng.	2300	47—57 kPa (0.5—0.6 bar) (7—8 psi)
6610 Tractor	CD6068TL050	84 (114) Eng.	2300	49—61 kPa (0.5—0.6 bar) (7—9 psi)
6610 Tractor (ECU Level 4)	CD6068TLA50	88 (118) Eng.	2300	49—61 kPa (0.5—0.6 bar) (7—9 psi)
6620 Tractor	CD6068HLA70	96 (129) Eng.	2300	54—66 kPa (0.5—0.7 bar) (8—10 psi)
6620 Tractor (Premium)	CD6068HL471	96 (129) Eng.	2300	60—72 kPa (0.6—0.7 bar) (9—10 psi)
6620SE2 Tractor	CD6068HL272	96 (129) Eng.	2300	56—68 kPa (0.6—0.7 bar) (8—10 psi)
6810 Tractor	CD6068TL051	92 (125) Eng.	2100	67—82 kPa (0.7—0.8 bar) (10—12 psi)
6810 Tractor (ECU Level 4)	CD6068TLA51	96 (129) Eng.	2100	67—82 kPa (0.7—0.8 bar) (10—12 psi)
6820 Tractor	CD6068HLA71	104 (139) Eng.	2100	58—70 kPa (0.6—0.7 bar) (8—10 psi)
6820 Tractor (Premium)	CD6068HL472	104 (139) Eng.	2100	73—89 kPa (0.7—0.9 bar) (11—13 psi)
6910 Tractor	CD6068TL052	99 (135) Eng.	2100	71—87 kPa (0.7—0.9 bar) (10—13 psi)
	CD6068TL054	107 (143) Eng.	2100	79—96 kPa (0.8—1.0 bar) (11—14 psi)
6910 Tractor (ECU Level 4)	CD6068TLA52	107 (143) Eng.	2100	58—70 kPa (0.6—0.7 bar) (8—10 psi)
6910S Tractor (ECU Level 4)	CD6068TLA53	115 (154) Eng.	2100	65—79 kPA (0.7—0.8 bar) (9—11 psi)
6920 Tractor	CD6068HLA72	115 (154) Eng.	2100	66—81 kPa (0.7—0.8 bar) (10—12 psi)
6920 Tractor (Premium)	CD6068HL473	115 (154) Eng.	2100	83—101 kPa (0.8—1.0 bar) (12—15 psi)
6920S Tractor	CD6068HLA73	123 (166) Eng.	2100	73—89 kPa (0.7—0.9 bar) (11—13 psi)
	CD6068HL474	123 (166) Eng.	2100	94—114 kPa (0.9—1.1 bar) (14—17 psi)
Mannheim, Germany (North American Market)				
6110/6110L Tractor	CD4045TL063	48 (65) PTO 63 (84) Eng.	2300	54—67 kPa (0.5—0.7 bar) (8—10 psi)
6120 Tractor	CD4045TL070	48 (65) PTO 63 (84) Eng.	2300	57—70 kPa (0.6—0.7 bar) (8—10 psi)
6120/6120L Tractor	CD4045TL271 (Tier 2)	48 (65) PTO 63 (84) Eng.	2300	52—64 kPa (0.5—0.6 bar) (7—9 psi)
6210/6210L Tractor	CD4045TL054	54 (72) PTO 67 (90) Eng.	2300	61—75 kPa (0.6—0.8 bar) (9—11 psi)
6215 Tractor (Advantage)	CD4045TL071 (Tier 1)	54 (72) PTO 70 (94) Eng.	2300	61—75 kPa (0.6—0.8 bar) (9—11 psi)
	CD4045TL272 (Tier 2)	54 (72) PTO 70 (94) Eng.	2300	61—75 kPa (0.6—0.8 bar) (9—11 psi)

Continued on next page

TURBO BOOST PRESSURES (JOHN DEERE AGRICULTURAL EQUIPMENT)

Machine Model	Engine Model	Rated Power at Full Load Rated Speed kW (hp)	Full Load Rated Speed rpm	Turbo Boost Pressure at Full Load Rated Speed kPa (bar) (psi)
6220 Tractor	CD4045TL071	54 (72) PTO 69 (90) Eng.	2300	69—84 kPa (0.7—0.8 bar) (10—12 psi)
6220/6220L Tractor	CD4045TL272 (Tier 2)	54 (72) PTO 69 (90) Eng.	2300	61—75 kPa (0.6—0.8 bar) (9—11 psi)
6310/6310L/6310S Tractor	CD4045TL055	60 (80) PTO 74 (99) Eng.	2300	72—88 kPa (0.7—0.9 bar) (10—13 psi)
6320 Tractor	CD4045HL073	60 (80) PTO 75 (101) Eng.	2300	64—78 kPa (0.6—0.8 bar) (9—11 psi)
	CD4045TL074	60 (80) PTO 75 (101) Eng.	2300	63—77 kPa (0.6—0.8 bar) (9—11 psi)
6320 IVT Tractor	CD4045HLA71	60 (80) PTO 77 (103) Eng.	2300	60—74 kPa (0.6—0.7 bar) (9—11 psi)
	CD4045HL476 (Tier 2)	60 (80) PTO 77 (103) Eng.	2300	65—79 kPa (0.7—0.8 bar) (9—11psi)
	CD4045HL472	60 (80) PTO 77 (103) Eng.	2300	63—77 kPa (0.6—0.8 bar) (9—11 psi)
6320/6320L/S Tractor	CD4045HL270 (Tier 2)	60 (80) PTO 77 (103) Eng.	2300	65—79 kPa (0.7—0.8 bar) (9—11psi)
	CD4045HL470	60 (80) PTO 77 (103) Eng.	2300	63—77 kPa (0.7—0.8 bar) (9—11psi)
6403, 6405 Tractor (Advantage)	CD4045TL062	63 (85) PTO 78 (105) Eng.	2300	72—88 kPa (0.7—0.9 bar) (10—13 psi)
6410/6410L/6410S Tractor	CD4045TL056	63 (85) PTO 81 (109) Eng.	2300	84—102 kPa (0.8—1.0 bar) (12—15 psi)
6415 Tractor	CD4045HL272	63 (85) PTO 86 (115) Eng.	2300	70—86 kPa (0.7—0.9 bar) (10—12 psi)
6415 Tractor (Advantage)	CD4045TL075	63 (85) PTO 86 (115) Eng.	2300	72—88 kPa (0.7—0.9 bar) (10—13 psi)
6420 Tractor	CD4045HL070	67 (90) PTO 84 (113) Eng.	2300	71—88 kPa (0.7—0.9 bar) (10—13 psi)
6420 IVT Tractor	CD4045HLA72	67 (90) PTO 84 (113) Eng.	2300	71—88 kPa (0.7—0.9 bar) (10—13 psi)
6420 IVT Tractor	CD4045HL475 (Tier 2)	67 (90) PTO 84 (113) Eng.	2300	72—88 kPa (0.7—0.9 bar) (10—13 psi)
6420/6420L/S Tractor	CD4045HL271 (Tier 2)	67 (90) PTO 84 (113) Eng.	2300	72—88 kPa (0.7—0.9 bar) (10—13 psi)
6510L/6510S Tractor	CD4045TL057	71 (95) PTO 85 (114) Eng.	2300	88—108 kPa (0.9—1.1 bar) (13—16 psi)
6520L Tractor	CD4045HL071	67 (90) PTO 86 (115) Eng.	2300	73—90 kPa (0.7—0.9 bar) (11—13 psi)

Continued on next page

TURBO BOOST PRESSURES (JOHN DEERE AGRICULTURAL EQUIPMENT)				
Machine Model	**Engine Model**	**Rated Power at Full Load Rated Speed kW (hp)**	**Full Load Rated Speed rpm**	**Turbo Boost Pressure at Full Load Rated Speed kPa (bar) (psi)**
6520L/S	CD4045HL273 (Tier 2)	67 (90) PTO 86 (115) Eng.	2300	72—88 kPa (0.7—0.9 bar) (10—13 psi)
6603, 6605 Tractor (Advantage)	CD6068TL053	71 (95) PTO 87 (117) Eng.	2300	49—60 kPa (0.5—0.6 bar) (7—9 psi)
6615 Tractor (Advantage)	CD6068TL071	71 (95) PTO 87 (117) Eng.	2300	49—60 kPa (0.5—0.6 bar) (7—9 psi)
	CD6068HL271 (Tier 2)	71 (95) PTO 87 (117) Eng.	2300	47—57 kPa (0.5—0.6 bar) (7—8 psi)
6715 Tractor (Advantage)	CD6068TL072	78 (105) PTO 97 (129) Eng.	2100	54—66 kPa (0.5—0.7 bar) (8—10 psi)
	CD6068HL273 (Tier 2)	78 (105) PTO 97 (129) Eng.	2100	54—66 kPa (0.5—0.7 bar) (8—10 psi)
Saltillo/Monterrey, Mexico				
5715 Tractor	PE4045TP059	67 (90) Eng.	2400	48—59 kPa (0.5—0.6 bar) (7—9 psi)
5715 Tractor (Export-Turkey)	PE4045TLV51 (Tier 1)	66 (89) Eng.	2400	63—77 kPa (0.6—0.8 bar) (9—11 psi)
	PE4045TP062	66 (89) Eng.	2400	63—77 kPa (0.6—0.8 bar) (9—11 psi)
6103 Tractor	PE4045TP055	64 (86) Eng.	2100	38—46 kPa (0.4—0.5 bar) (6—7 psi)
6203 Tractor	PE4045TP056	71 (95) Eng.	2100	67—82 kPa (0.7—0.8 bar) (10—12 psi)
6400 Tractor	PE4045TP054	78 (105) Eng.	2300	72—88 kPa (0.7—0.9 bar) (10—13 psi)
6403 Tractor	PE4045TP057 (Non-Certified)	79 (106) Eng.	2100	72—88 kPa (0.7—0.9 bar) (10—13 psi)
	PE4045TP063 (Non-Certified	79 (106) Eng.	2100	72—88 kPa (0.7—0.9 bar) (10—13 psi)
6403 Export Tractor (Export-U.S.A.)	PE4045TP060 (Tier 1 Certified)	63 (85) PTO 72 (97) Eng.	2100	55—67 kPa (0.5—0.7 bar) (8—10 psi)
	PE4045TP064 (Tier 1 Certified)	63 (85) PTO 72 (97) Eng.	2100	55—67 kPa (0.5—0.7 bar) (8—10 psi)
6415 Tractor	PE4045TP061	78 (105) Eng.	2300	72—88 kPa (0.7—0.9 bar) (10—13 psi)
6603 Tractor	PE6068TP053 (Non—Certified)	87 (117) Eng.	2100	36—44 kPa (0.4—0.5 bar) (6—7 psi)
	PE6068TP061 (Non-Certified)	87 (117) Eng.	2100	36—44 kPa (0.4—0.5 bar) (6—7 psi)
6603 Export Tractor (Export-U.S.A.)	PE6068TP054 (Tier 1 Certified)	71 (95) PTO 82 (110) Eng.	2100	40—50 kPa (0.4—0.5 bar) (6—7 psi)
	PE6068TP062 (Tier 1 Certified)	71 (95) PTO 82 (110) Eng.	2100	40—50 kPa (0.4—0.5 bar) (6—7 psi)
7220 Tractor	PE6068TP055	87 (117) Eng.	2300	49—59 kPa (0.5—0.6 bar) (7—9 psi)
7320 Tractor	PE6068TP056	96 (129) Eng.	2300	57—69 kPa (0.6—0.7 bar) (8—10 psi)

Continued on next page

TURBO BOOST PRESSURES (JOHN DEERE AGRICULTURAL EQUIPMENT)				
Machine Model	**Engine Model**	**Rated Power at Full Load Rated Speed kW (hp)**	**Full Load Rated Speed rpm**	**Turbo Boost Pressure at Full Load Rated Speed kPa (bar) (psi)**
7405 Tractor (Advantage) (Export-U.S.A.)	CD6068TP051	78 (105) PTO 81 (109) Eng.	2100	65—79 kPa (0.7—0.8 bar) (9—11 psi)
	PE6068TP051	78 (105) PTO 81 (109) Eng.	2100	65—79 kPa (0.7—0.8 bar) (9—11 psi)
7420 Tractor	PE6068TP057	106 (142) Eng.	2100	65—79 kPa (0.7—0.8 bar) (9—11 psi)
7500 Tractor	PE6068TP052	103 (138) Eng.	2100	72—88 kPa (0.7—0.9 bar) (10—13 psi)
7520 Tractor	PE6068TP058	115 (154) Eng.	2100	78—96 kPa (0.8—1.0 bar) (11—14 psi)
Tekirdag, Turkey				
5713 Tractor	PE4045TP062	67 (90)	2400	63—77 kPa (0.6—0.8 bar) (9—11 psi)
Thibodaux, Louisiana (Cameco Industries)				
SP1850 Cane Loader	PE4045TF150	78 (105)	2300	78—96 kPa (0.8—1.0 bar) (11—14 psi)
	PE4045TT852	78 (105)	2300	78—96 kPa (0.8—1.0 bar) (11—14 psi)
SP2252 Cane Loader	PE6068TT850	138 (185) Eng.	2400	110—134 kPa (1.1—1.3 bar) (16—19 psi)
100 Loader/Harvester (Kanaf)	PE6068TT850	138 (185) Eng.	2400	110—134 kPa (1.1—1.3 bar) (16—19 psi)
110 Cane Tractor	PE4045TT851	73 (98) Eng.	2200	66—80 kPa (0.7—0.8 bar) (10—12 psi)
220 Tractor	PE6068TT851	138 (185) Eng.	2400	110—134 kPa (1.1—1.3 bar) (16—19 psi)
220 4WD Tractor/ Pineapple Harvester/ Sprayer	PE6068TT850	138 (185) Eng.	2400	110—134 kPa (1.1—1.3 bar) (16—19 psi)
404 Vegetable Sprayer	T04045TT850	79 (106) Eng.	2200	72—88 kPa (0.7—0.9 bar) (10—13 psi)
	T04045TT801	79 (106) Eng.	2200	72—88 kPa (0.7—0.9 bar) (10—13 psi)
	PE4045TT850	79 (106) Eng.	2200	72—88 kPa (0.7—0.9 bar) (10—13 psi)

Continued on next page

TURBO BOOST PRESSURES (JOHN DEERE COMMERCIAL AND CONSUMER EQUIPMENT)				
Machine Model	**Engine Model**	**Rated Power at Full Load Rated Speed kW (hp)**	**Full Load Rated Speed rpm**	**Turbo Boost Pressure at Full Load Rated Speed kPa (bar) (psi)**
Augusta, Georgia				
5510/5510N Tractor	CD4045TLV50	56 (75) PTO 65 (87) Eng.	2400	54—66 kPa (0.5—0.7 bar) (8—10 psi)
	PE4045TLV50	56 (75) PTO 65 (87) Eng.	2400	54—66 kPa (0.5—0.7 bar) (8—10 psi)
5510/5510N Tractor (No Air Heater Option)	PE4045TLV51	56 (75) PTO 65 (87) Eng.	2400	56—66 kPa (0.6—0.7 bar) (8—10 psi)
5510 Tractor (LUK Clutch Option)	PE4045TLV52	56 (75) PTO 66 (89) Eng.	2400	63—77 kPa (0.6—0.8 bar) (9—11 psi)
5520/5520N Tractor	PE4045TLV50	56 (75) PTO 66 (89) Eng.	2400	54—66 kPa (0.5—0.7 bar) (8—10 psi)
5520/5520N Tractor (No Air Heater Option)	PE4045TLV51	56 (75) PTO 66 (89) Eng.	2400	56—66 kPa (0.6—0.7 bar) (8—10 psi)
5520 Tractor	PE4045TLV52	56 (75) PTO 66 (89) Eng.	2400	63—77 kPa (0.6—0.8 bar) (9—11 psi)
5425 Tractor	PE4045TLV53	63 (84)	2400	64—78 kPa (0.6—0.8 bar) (9—11 psi)
5525 Tractor	PE4045TLV54	68 (91)	2400	72—88 kPa (0.7—0.9 bar) (10—13 psi)
Agritalia srl (Vittoria, Sicily, Italy)				
5410 Tractor	CD4045TAT050	61 (82)	2300	64—78 kPa (0.6—0.8 bar) (9—11 psi)
5510 Tractor (Agritalia)	CD4045TAT50	61 (82) Eng.	2300	65—79 kPa (0.7—0.8 bar) (9—11 psi)
5515 Tractor	CD4045TAT70	60 (80) Eng.	2300	65—82 kPa (0.6—0.8 bar) (9—12 psi)
5615 Tractor	CD4045TAT71	66 (89) Eng.	2300	75—92 kPa (0.7—0.9 bar) (11—13 psi)

DPSG,OUO1004,2748 –19–01JUL04–11/11

Intake Manifold Pressure (Turbocharger Boost) Specifications (Continued)

TURBO BOOST PRESSURES JOHN DEERE CONSTRUCTION AND FORESTRY EQUIPMENT				
Machine Model	**Engine Model**	**Rated Power at Full Load Rated Speed kW (hp)**	**Full Load Rated Speed rpm**	**Turbo Boost Pressure at Full Load Rated Speed kPa (bar) (psi)**
Backhoe, Loader				
B140 Backhoe Loader	PE4045DT060 (Tier 2)	56 (75)	2300	Not Available
B140 AC Backhoe Loader	PE4045TT094 (Tier 2)	58 (78)	2200	Not Available
B150 Backhoe Loader	PE4045TT094 (Tier 2)	63 (84)	2200	Not Available
B150 EH Backhoe Loader	PE4045TT094 (Tier 2)	69 (93)	2200	Not Available
B160 Backhoe Loader	PE4045TT095 (Tier 2)	74 (99)	2200	Not Available
B160 EH Backhoe Loader	PE4045TT095 (Tier 2)	74 (99)	2200	Not Available
B180 Backhoe Loader	PE6068TT061 (Tier 2)	96 (129)	2200	Not Available
	PE6068TT096 (Tier 2)	96 (129)	2200	Not Available
B180 EH Backhoe Loader	PE6068TT061, (Tier 2)	96 (129)	2200	Not Available
	PE6068TT096 (Tier 2)	96 (129)	2200	Not Available
310E Backhoe Loader	T04045TT056	58 (78)	2200	44—54 kPa (0.4—0.5 bar) (6—8 psi)
310E Backhoe Loader (Alt Comp)	T04045TT056	58 (78)	2200	44—54 kPa (0.4—0.5 bar) (6—8 psi)
310SE Backhoe Loader	T04045TT050	66 (89)	2200	56—68 kPa (0.6—0.7 bar) (8—10 psi)
315SE Backhoe Loader	T04045TT050	66 (89)	2200	56—68 kPa (0.6—0.7 bar) (8—10 psi)
	T04045TT060	66 (89)	2200	56—68 kPa (0.6—0.7 bar) (8—10 psi)
310G Backhoe Loader (Alt Comp) (S.N. —910007)	T04045TT080	58 (78)	2200	50— 61 kPa (0.5—0.6 bar) (7—9 psi)
	PE4045TT080	58 (78)	2200	50— 61 kPa (0.5—0.6 bar) (7—9 psi)
310G Backhoe Loader (Alt Comp) (S.N. 910057—)	PE4045TT088 (Tier 2)	63 (84)	2200	50— 61 kPa (0.5—0.6 bar) (7—9 psi)
310SG Backhoe Loader (Alt Comp) (S.N. —909514)	T04045TT080	58 (78)	2200	50— 61 kPa (0.5—0.6 bar) (7—9 psi)

Continued on next page

TURBO BOOST PRESSURES JOHN DEERE CONSTRUCTION AND FORESTRY EQUIPMENT				
Machine Model	**Engine Model**	**Rated Power at Full Load Rated Speed kW (hp)**	**Full Load Rated Speed rpm**	**Turbo Boost Pressure at Full Load Rated Speed kPa (bar) (psi)**
310SG Backhoe Loader (S.N. —910004)	T04045TT081	66 (89)	2200	56—68 kPa (0.6—0.7 bar) (8—10 psi)
	PE4045TT081	66 (89)	2200	56—68 kPa (0.6—0.7 bar) (8—10 psi)
310SG Backhoe Loader (S.N. 910056—)	PE4045TT089 (Tier 2)	69 (93)	2300	62—75 kPa (0.6—0.8 bar) (9—11 psi)
315SG Backhoe Loader (S.N. —909995)	T04045TT081	66 (89)	2200	56—68 kPa (0.6—0.7 bar) (8—10 psi)
	PE4045TT081	66 (89)	2200	56—68 kPa (0.6—0.7 bar) (8—10 psi)
315SG Backhoe Loader (S.N. 910069—)	PE4045TT089 (Tier 2)	69 (93)	2300	67—83 kPa (0.7—0.8 bar) (10—12 psi)
410E Backhoe Loader	T04045TT053	73 (98)	2200	66—80 kPa (0.7—0.8 bar) (10—12 psi)
410G Backhoe Loader	T04045TT082	73 (98)	2200	66—80 kPa (0.7—0.8 bar) (10—12 psi)
	PE4045TT082	73 (98)	2200	66—80 kPa (0.7—0.8 bar) (10—12 psi)
710D Backhoe Loader (S.N. —834729)	T06068TT050	92 (123)	2200	53—65 kPa (0.5—0.7 bar) (8—9 psi)
	PE6068TT050	92 (123)	2200	53—65 kPa (0.5—0.7 bar) (8—9 psi)
710D Backhoe Loader (S.N. 834730—)	T06068TT055	92 (123)	2200	53—65 kPa (0.5—0.7 bar) (8—9 psi)
	PE6068TT055	92 (123)	2200	53—65 kPa (0.5—0.7 bar) (8—9 psi)
710G Backhoe Loader	PE6068TT057 (Tier 2)	96 (129)	2200	79—97 kPa (0.8—1.0 bar) (11—14 psi)
Crawler Dozer, Crawler Loader				
DX75 Crawler Dozer (Japan)	T04045TT052	69 (93)	2100	63—77 kPa (0.6—0.8 bar) (9—11 psi)
DX75 HST Crawler Dozer (Japan)	T04045TT070	60 (80)	2200	45—55 kPa (0.5—0.6 bar) (6—8 psi)
	PE4045TT070	60 (80)	2200	45—55 kPa (0.5—0.6 bar) (6—8 psi)
450G Crawler Dozer (Direct Drive) (S.N.841246—879425)	T04045TT061 (Tier 1)	58 (78)	2100	39—47 kPa (0.4—0.5 bar) (6—7 psi)
	PE4045TT061 (Tier 1)	58 (78)	2100	39—47 kPa (0.4—0.5 bar) (6—7 psi)
450G Crawler Dozer (Torque Converter) (S.N. 840529—)	T04045TT013 (Non Certified)	58 (78)	2100	39—47 kPa (0.4—0.5 bar) (6—7 psi)
450G Crawler Dozer (Torque Converter)	T04045TT067	58 (78)	2100	39—47 kPa (0.4—0.5 bar) (6—7 psi)
	PE4045TT067	58 (78)	2100	39—47 kPa (0.4—0.5 bar) (6—7 psi)
450H LGP Crawler Dozer (S.N. xxxxxx—) (S.N. —xxxxx)	T04045TT058	60 (80)	2200	53— 64 kPa (0.5—0.6 bar) (8—9 psi)
	PE4045TT058	60 (80)	2200	53— 64 kPa (0.5—0.6 bar) (8—9 psi)

06
210
35

Continued on next page

TURBO BOOST PRESSURES JOHN DEERE CONSTRUCTION AND FORESTRY EQUIPMENT				
Machine Model	**Engine Model**	**Rated Power at Full Load Rated Speed kW (hp)**	**Full Load Rated Speed rpm**	**Turbo Boost Pressure at Full Load Rated Speed kPa (bar) (psi)**
450H LGP Crawler Dozer (S.N. xxxxxx—) (S.N. —xxxxx)	T04045TT085 (Tier 2)	60 (80)	2200	53— 64 kPa (0.5—0.6 bar) (8—9 psi)
	PE4045TT085 (Tier 2)	60 (80)	2200	53— 64 kPa (0.5—0.6 bar) (8—9 psi)
	PE4045TT090 (Tier 2)	60 (80)	2200	53— 64 kPa (0.5—0.6 bar) (8—9 psi)
450H Crawler Dozer (Alt Comp)	T04045TT057	56 (75)	2200	41—51 kPa (0.4—0.5 bar) (7—8 psi)
	PE4045TT057	56 (75)	2200	41—51 kPa (0.4—0.5 bar) (7—8 psi)
450H Crawler Dozer (Alt Comp)	T04045TT084 (Tier 2)	56 (75)	2200	46—56 kPa (0.4—0.6 bar) (7—9 psi)
	PE4045TT084 (Tier 2)	56 (75)	2200	46—56 kPa (0.4—0.6 bar) (7—9 psi)
	PE4045TT090 (Tier 2)	56 (75)	2200	43— 53 kPa (0.4—0.5 bar) (6—8 psi)
	PE4045TT090 (Tier 2)	60 (80)	2200	53—64 kPa (0.5—0.6 bar) (8—9 psi)
	PE4045TT090 (Tier 2)	63 (84)	2200	42—52 kPa (0.4—0.5 bar) (6—7 psi)
	PE4045TT090 (Tier 2)	66 (89)	2200	63—77 kPa (0.6—0.8 bar) (9—11 psi)
	PE4045TT090 (Tier 2)	74 (99)	2200	71—87 kPa (0.7—0.9 bar) (10—13 psi)
455G Crawler Loader (Direct Drive)	T04045TT061 (Tier 1)	58 (78)	2100	38—47 kPa (0.4—0.5 bar) (6—7 psi)
	PE4045TT061 (Tier 1)	58 (78)	2100	38—47 kPa (0.4—0.5 bar) (6—7 psi)
455G Crawler Loader (Torque Converter)	T04045TT067	58 (78)	2100	38—47 kPa (0.4—0.5 bar) (6—7 psi)
	PE4045TT067	58 (78)	2100	38—47 kPa (0.4—0.5 bar) (6—7 psi)
550G Crawler Dozer (Direct Drive)	T04045TT006	66 (89)	2100	51—63 kPa (0.5—0.6 bar) (7—9 psi)
	T04045TT014	66 (89)	2100	51—63 kPa (0.5—0.6 bar) (7—9 psi)
	T04045TT062	66 (89)	2100	51—63 kPa (0.5—0.6 bar) (7—9 psi)
550G Crawler Dozer (Torque Converter)	T04045TT062	66 (89)	2100	51—63 kPa (0.5—0.6 bar) (7—9 psi)
	T04045TT068	66 (89)	2100	51—63 kPa (0.5—0.6 bar) (7—9 psi)
550H Crawler Dozer (S.N. —909830)	T04045TT064	63 (84)	2200	42—52 kPa (0.4—0.5 bar) (6—7 psi)
	PE4045TT064	63 (84)	2200	42—52 kPa (0.4—0.5 bar) (6—7 psi)

Continued on next page

TURBO BOOST PRESSURES JOHN DEERE CONSTRUCTION AND FORESTRY EQUIPMENT				
Machine Model	**Engine Model**	**Rated Power at Full Load Rated Speed kW (hp)**	**Full Load Rated Speed rpm**	**Turbo Boost Pressure at Full Load Rated Speed kPa (bar) (psi)**
550H Crawler Dozer (S.N. 910019—)	PE4045TT086 (Tier 2)	63 (84)	2200	50—62 kPa (0.5—0.6 bar) (7—9 psi)
	PE4045TT090 (Tier 2)	63 (84)	2200	53— 65 kPa (0.5—0.7 bar) (8—9 psi)
	PE4045TT090 (Tier 2)	66 (89)	2200	Not Available
	PE4045TT090 (Tier 2)	74 (99)	2200	Not Available
550H Forest Fire Plow (S.N. 89848—909788)	T04045TT083	74 (99)	2200	71—87 kPa (0.7—0.9 bar) (10—13 psi)
	PE4045TT083	74 (99)	2200	71—87 kPa (0.7—0.9 bar) (10—13 psi)
550H LGP Crawler Dozer (S.N. —909667)	T04045TT065	66 (89)	2200	63—77 kPa (0.6—0.8 bar) (9—11 psi)
	PE4045TT065	66 (89)	2200	63—77 kPa (0.6—0.8 bar) (9—11 psi)
550H LGP Crawler Dozer (S.N. 910017—)	PE4045TT087 (Tier 2)	66 (89)	2200	63—77 kPa (0.6—0.8 bar) (9—11 psi)
	PE4045TT090 (Tier 2)	66 (89)	2200	63—77 kPa (0.6—0.8 bar) (9—11 psi)
555G Crawler Loader (Direct Drive) (S.N. 840461—)	T04045TT063	74 (99)	2100	63—77 kPa (0.6—0.8 bar) (9—11 psi)
	PE4045TT063	74 (99)	2100	63—77 kPa (0.6—0.8 bar) (9—11 psi)
555G (Torque Converter) Crawler Loader	T04045TT069	74 (99)	2100	63—77 kPa (0.6—0.8 bar) (9—11 psi)
	PE4045TT069	74 (99)	2100	63—77 kPa (0.6—0.8 bar) (9—11 psi)
650G Crawler Dozer (Direct Drive)	T04045TT007	74 (99)	2100	63—77 kPa (0.6—0.8 bar) (9—11 psi)
	T04045TT063	74 (99)	2100	63—77 kPa (0.6—0.8 bar) (9—11 psi)
	PE4045TT063	74 (99)	2100	63—77 kPa (0.6—0.8 bar) (9—11 psi)
650G Crawler Dozer (Torque Converter)	T04045TT015	74 (99)	2100	63—77 kPa (0.6—0.8 bar) (9—11 psi)
	T04045TT063	74 (99)	2100	63—77 kPa (0.6—0.8 bar) (9—11 psi)
	PE4045TT063	74 (99)	2100	63—77 kPa (0.6—0.8 bar) (9—11 psi)
	T04045TT069	74 (99)	2100	63—77 kPa (0.6—0.8 bar) (9—11 psi)
	PE4045TT069	74 (99)	2100	63—77 kPa (0.6—0.8 bar) (9—11 psi)
650H Crawler Dozer	T04045TT066	73 (98)	2200	51—62 kPa (0.5—0.7 bar) (7—9 psi)
	PE4045TT066	73 (98)	2200	51—62 kPa (0.5—0.7 bar) (7—9 psi)
650H Crawler Dozer	PE4045HT050 (Tier 2)	73 (98)	2200	51—62 kPa (0.5—0.7 bar) (7—9 psi)
650H Forest Fire Plow	PE4045HT051 (Tier 2)	86 (115)	2200	85 —104 kPa (0.9—1.0 bar) (12—15 psi)
650H Forest Fire Plow	T04045TT091	85 (114)	2200	79—97 kPa (0.7—0.9 bar) (10—13 psi)

Continued on next page

TURBO BOOST PRESSURES JOHN DEERE CONSTRUCTION AND FORESTRY EQUIPMENT				
Machine Model	**Engine Model**	**Rated Power at Full Load Rated Speed kW (hp)**	**Full Load Rated Speed rpm**	**Turbo Boost Pressure at Full Load Rated Speed kPa (bar) (psi)**
	PE4045TT091	85 (114)	2200	79—97 kPa (0.7—0.9 bar) (10—13 psi)
700H Crawler Dozer	T06068TT056	92 (123)	2100	46—56 kPa (0.5—0.6 bar) (7—9 psi)
	PE6068TT056	92 (123)	2100	46—56 kPa (0.5—0.6 bar) (7—9 psi)
700H Crawler Dozer	PE6068TT060 (Tier 2)	92 (123)	2100	72— 88 kPa (0.7—0.9 bar) (11—13 psi)
750C Crawler Dozer (S.N. —831315)	T06068TT007	110 (148)	2100	72—88 kPa (0.7—0.9 bar) (11—13 psi)
750C Crawler Dozer (S.N. 831316—)	T06068TT052	110 (148)	2100	72—88 kPa (0.7—0.9 bar) (11—13 psi)
	PE6068TT052	110 (148)	2100	72—88 kPa (0.7—0.9 bar) (11—13 psi)
Excavator, Logger				
690 Excavator	T06068TT051	110 (148)	2100	69—85 kPa (0.7—0.8 bar) (10—12 psi)
	PE6068TT051	110 (148)	2100	69—85 kPa (0.7—0.8 bar) (10—12 psi)
690E LC Excavator (S.N. 559603—)	T06068TDW56	107 (143)	2100	62—76 kPa (0.6—0.8 bar) (9—11 psi)
110 Excavator	T04045TT054	63 (84)	2200	50—62 kPa (0.5—0.6 bar) (7—9 psi)
	PE4045TP052	63 (84)	2200	50—62 kPa (0.5—0.6 bar) (7—9 psi)
110C Excavator	PE4045TP058	66 (89)	2200	50— 61 kPa (0.5—0.6 bar) (7—9 psi)
110CFX Excavator	PE4045TP058	66 (89)	2200	50— 61 kPa (0.5—0.6 bar) (7—9 psi)
HYEX Military Excavator	PE4045TT050	86 (115)	2500	114—140 kPa (1.1—1.4 bar) (17—20 psi)
120 Excavator	T04045TT052	69 (93)	2100	63—77 kPa (0.6—0.8 bar) (9—11 psi)
	PE4045TP051	69 (93)	2100	63—77 kPa (0.6—0.8 bar) (9—11 psi)
120C Excavator	PE4045HP050 (Tier 2)	70 (94)	2200	55—67 kPa (0.5—0.7 bar) (8—10 psi)
160LC Excavator	T04045TT055	81 (109)	2300	89—109 kPa (0.9—1.1 bar) (13—16 psi)
160C LC Excavator	PE4045HP051 (Tier 2)	85 (114)	2300	85—103 kPa (0.9—1.0 bar) (12—15 psi)
	PE4045TP053	81 (109)	2300	89—109 kPa (0.9—1.1 bar) (13—16 psi)
200LC Excavator	T06068TT051	110 (148)	2100	69—85 kPa (0.7—0.8 bar) (10—12 psi)
	PE6068TT051	110 (148)	2100	69—85 kPa (0.7—0.8 bar) (10—12 psi)
200C LC Excavator	PE6068HT053 (Tier 2)	110 (148)	2150	72—88 kPa (0.7—0.9 bar) (11—13 psi)
	PE6068HT059 (Tier 2)	110 (148)	2150	72—88 kPa (0.7—0.9 bar) (11—13 psi)
230LC, 230LR Excavator	T06068HT051	134 (180)	2100	101—124 kPa (1.0—1.2 bar) (15—18 psi)
	PE6068HT051	134 (180)	2100	83—101 kPa (0.8—1.0 bar) (12—15 psi)
230C LC Excavator	PE6068HT054 (Tier 2)	134 (180)	2100	99—121 kPa (1.0—1.2 bar) (15—17 psi)
270C LC Excavator	PE6068HT055 (Tier 2)	141 (189)	2150	110—134 kPa (1.1—1.3 bar) (16—19 psi)

Continued on next page

TURBO BOOST PRESSURES JOHN DEERE CONSTRUCTION AND FORESTRY EQUIPMENT				
Machine Model	**Engine Model**	**Rated Power at Full Load Rated Speed kW (hp)**	**Full Load Rated Speed rpm**	**Turbo Boost Pressure at Full Load Rated Speed kPa (bar) (psi)**
270LC Excavator	T06068HT052	141 (189)	2150	110—134 kPa (1.1—1.3 bar) (16—19 psi)
	PE6068HT052	141 (189)	2150	110—134 kPa (1.1—1.3 bar) (16—19 psi)
CFX270C LC Excavator	PE6068HT055 (Tier 2)	141 (189)	2150	110—134 kPa (1.1—1.3 bar) (16—19 psi)
CFX270LC Excavator	T06068HT052	141 (189)	2150	110—134 kPa (1.1—1.3 bar) (16—19 psi)
790E LC Excavator	T06068TT005	120 (161)	2100	90—100 kPa (0.9—1.0 bar) (13—15 psi)
2054 Logger	PE6068HT053 (Tier 2)	115 (154)	2150	88—108 kPa (0.9—1.1 bar) (13—16 psi)
	PE6068TT053 (Tier 2)	110 (148)	2150	72—88 kPa (0.7—0.9 bar) (11—13 psi)
	PE6068HT059 (Tier 2)	110 (148)	2150	73—89 kPa (0.7—0.9 bar) (11—13 psi)
2554 Logger	PE6068HT054	134 (180)	2100	101—124 kPa (1.0—1.2 bar) (15—18 psi)
	PE6068HT052	141 (189)	2150	86—105 kPa (0.9—1.1 bar) (12—15 psi)
Feller Buncher				
643G Feller Buncher	T06068TT053	120 (161)	2200	90—110 kPa (0.9—1.1 bar) (13—16 psi)
	PE6068TT053	120 (161)	2200	90—110 kPa (0.9—1.1 bar) (13—16 psi)
643H Feller Buncher	PE6068TT058	120 (161)	2200	90—110 kPa (0.9—1.1 bar) (13—16 psi)
643J Feller Buncher	PE6068HTJ55	141 (184)	2000	—
653E Feller Buncher	T06068TT053	120 (161)	2200	90—110 kPa (0.9—1.1 bar) (13—16 psi)
	PE6068TT053	120 (161)	2200	90—110 kPa (0.9—1.1 bar) (13—16 psi)
653G Feller Buncher	T06068TT053	120 (161)	2200	90—110 kPa (0.9—1.1 bar) (13—16 psi)
	PE6068TT053	120 (161)	2200	90—110 kPa (0.9—1.1 bar) (13—16 psi)
	PE6068TT059	120 (161)	2200	90—110 kPa (0.9—1.1 bar) (13—16 psi)
653G Feller Buncher	PE6068HT057	140 (188)	2200	90—110 kPa (0.9—1.1 bar) (13—16 psi)
740 Feller Buncher	PE6068TT058	120 (161)	2200	90—110 kPa (0.9—1.1 bar) (13—16 psi)
843G Feller Buncher	T06068HT050	140 (188)	2200	90—110 kPa (0.9—1.1 bar) (13—16 psi)
	PE6068HT050	140 (188)	2200	90—110 kPa (0.9—1.1 bar) (13—16 psi)
843H Feller Buncher	PE6068HT056	140 (188)	2200	90—110 kPa (0.9—1.1 bar) (13—16 psi)
Forwarder				
810 Forwarder	CD4045HTJ75	86 (115)	2000	81—99 kPa (0.8—1.0 bar) (12—14 psi)
1010D Forwarder	CD4045HTJ76	86 (115)	2000	81—99 kPa (0.8—1.0 bar) (12—14 psi)
1110D Forwarder	CD6068HTJ75	120 (161)	2000	86—105 kPa (0.9—1.0 bar) (12—15 psi)
1410D Forwarder	CD6068HTJ77	129 (173)	2000	113—139 kPa (1.1—1.4 bar) (16—20 psi)
Grader				
670C, 670C Series II Grader	T06068HDW53	112 (150)	2000	94—114 kPa (0.9—1.1 bar) (14—17 psi)
	PE6068HDW53	112 (150)	2000	94—114 kPa (0.9—1.1 bar) (14—17 psi)
670CH, 672CH Grader	T06068HDW55	127 (170)	2000	105—125 kPa (1.1—1.3 bar) (15—18 psi)

Continued on next page

TURBO BOOST PRESSURES JOHN DEERE CONSTRUCTION AND FORESTRY EQUIPMENT				
Machine Model	**Engine Model**	**Rated Power at Full Load Rated Speed kW (hp)**	**Full Load Rated Speed rpm**	**Turbo Boost Pressure at Full Load Rated Speed kPa (bar) (psi)**
	PE6068HDW55	127 (170)	2000	105—125 kPa (1.1—1.3 bar) (15—18 psi)
670CH Series II, 672CH Series II Grader (S.N. —589368)	T06068HDW58	130 (174)	2200	96—118 kPa (0.9—1.2 bar) (14—17 psi)
	PE6068HDW58	130 (174)	2200	96—118 kPa (0.9—1.2 bar) (14—17 psi)
670CH Series II, 672CH Series II Grader (S.N. 589369—)	PE6068HDW61 (Tier 2)	131 (176)	2180	92— 112 kPa (0.9—1.1 bar) (13—16 psi)
Harvester, Wheeled				
770 Wheel Harvester	CD4045HTJ77	86 (115)	2000	81—99 kPa (0.8—1.0 bar) (12—14 psi)
1070D Wheel Harvester	CD6068HTJ76	129 (173)	2000	113—139 kPa (1.1—1.4 bar) (16—20 psi)
Log Loader, Knuckleboom				
330, 330B, 430, 430B Knuckleboom Log Loader	PE6068TTJ50	120 (161)	2200	89—109 kPa (0.9—1.1 bar) (13—15 psi)
335B, 335C, 435B, 435C, 437C Knuckleboom Log Loader	PE6068TTJ51	127 (170)	2200	108—133 kPa (1.1—1.3 bar) (16—19 psi)
Landscape Loader				
210LE Landscape Loader	PE4045TT092 (Tier 2)	63 (84)	2200	53—65 kPa (0.5—0.7 bar) (8—9 psi)
4WD Loader				
LX80 Loader	T04045HDW51	85 (114)	2200	79—97 kPa (0.8—1.0 bar) (11—14 psi)
LX100 Loader (Hitachi Construction Machine)	T06068TDW53	103 (138)	2100	62— 76 kPa (0.6—0.8 bar) (9—11 psi)
	PE6068TDW53	103 (138)	2100	62— 76 kPa (0.6—0.8 bar) (9—11 psi)
LX100-3 Loader (Hitachi Construction Machine)	T06068TDW50	97 (130)	2100	66—80 kPa (0.7—0.8 bar) (10—12 psi)
	T06068TDW50	97 (130)	2100	66—80 kPa (0.7—0.8 bar) (10—12 psi)
	PE6068TDW50	97 (130)	2100	66—80 kPa (0.7—0.8 bar) (10—12 psi)
LX120 Loader (Hitachi Construction Machine)	T06068HDW52	127 (170)	2200	91—111 kPa (0.9—1.1 bar) (13—16 psi)
	T06068HDW70	127 (170)	2200	91—111 kPa (0.9—1.1 bar) (13—16 psi)
	PE6068HDW70	127 (170)	2200	91—111 kPa (0.9—1.1 bar) (13—16 psi)
344H Loader	CD4045TF152	73 (99)	2200	50—62 kPa (0.5—.62 bar) (7—9 psi)
TC44H Tool Carrier	T04045TDW50	85 (114)	2200	79—97 kPa (0.8—1.0 bar) (11—14 psi)
	PE4045TDW50	85 (114)	2200	79—97 kPa (0.8—1.0 bar) (11—14 psi)
444H Loader	T04045HDW50	88 (118)	2200	
	T04045TDW50	85 (114)	2200	74—90 kPa (0.7—0.9 bar) (10—13 psi)
	PE4045TDW50	85 (114)	2200	74—90 kPa (0.7—0.9 bar) (10—13 psi)
444J Loader	PE4045HDW52 (Tier 2)	90 (121)	2200	92—112 kPa (0.9—1.1 bar) (13—16 psi)

Continued on next page

TURBO BOOST PRESSURES JOHN DEERE CONSTRUCTION AND FORESTRY EQUIPMENT				
Machine Model	**Engine Model**	**Rated Power at Full Load Rated Speed kW (hp)**	**Full Load Rated Speed rpm**	**Turbo Boost Pressure at Full Load Rated Speed kPa (bar) (psi)**
TC54H Tool Carrier	T06068TDW50	103 (138)	2200	66—80 kPa (0.7—0.8 bar) (10—12 psi)
	T06068TDW50	106 (142	2200	66—80 kPa (0.7—0.8 bar) (10—12 psi)
	PE6068TDW50	103 (138)	2200	66—80 kPa (0.7—0.8 bar) (10—12 psi)
	PE6068TDW50	106 (142)	2200	66—80 kPa (0.7—0.8 bar) (10—12 psi)
544H Loader	T06068TDW50	103 (138)	2200	66—80 kPa (0.7—0.8 bar) (10—12 psi)
	T06068TDW50	106 (142)	2200	66—80 kPa (0.7—0.8 bar) (10—12 psi)
	PE6068TDW50	103 (138)	2200	66—80 kPa (0.7—0.8 bar) (10—12 psi)
	PE6068TDW50	106 (142)	2200	66—80 kPa (0.7—0.8 bar) (10—12 psi)
544J Loader	PE6068HDW56 (Tier 2)	114 (153)	2200	88—108 kPa (0.9—1.1 bar) (13—16 psi)
TC62H Tool Carrier	T06068HDW50	127 (170)	2200	91—111 kPa (0.9—1.1 bar) (13—15 psi)
	PE6068HDW50	127 (170)	2200	91—111 kPa (0.9—1.1 bar) (13—15 psi)
624G Loader	T06068TDW10	120 (161)	2200	90—100 kPa (0.9—1.0 bar) (13—15 psi)
624H Loader	T06068HDW50	127 (170)	2200	91—111 kPa (0.9—1.1 bar) (13—15 psi)
	PE6068HDW50	127 (170)	2200	91—111 kPa (0.9—1.1 bar) (13—15 psi)
624J Loader	PE6068HDW57 (Tier 2)	132 (177)	2200	86—105 kPa (0.9—1.0 bar) (12—15 psi)
Skid Steer Loader				
280 Skid Steer Loader	PE4045TKV50	66 (89)	2400	62—76 kPa (0.6—0.8 bar) (9—11 psi)
Skidder				
360D Skidder (Timberjack)	T06068TDW54	94 (126)	2200	52—64 kPa (0.5—0.6 bar) (7—9 psi)
	PE6068TDW54	94 (126)	2200	52—64 kPa (0.5—0.6 bar) (7—9 psi)
360D Skidder (Timberjack) (S.N. 589337—)	PE6068TDW58 (Tier 2)	96 (129)	2200	86—105 kPa (0.9—1.0 bar) (12—15 psi)
460D Skidder (Direct Drive) (Timberjack)	T06068TDW55	117 (157)	2200	94—114 kPa (0.9—1.1 bar) (14—17 psi)
	PE6068TDW55	117 (157)	2200	94—114 kPa (0.9—1.1 bar) (14—17 psi)
460D Skidder (Direct Drive) (Timberjack) (S.N. 589337—)	PE6068HDW60 (Tier 2)	125 (168)	2200	114—140 kPa (1.1—1.4 bar) (17—20 psi)
460D Skidder (Torque Converter) (Timberjack) (S.N. —586336)	T06068TDW57	127 (170)	2200	108—133 kPa (1.1—1.3 bar) (16—19 psi)
	PE6068TDW57	127 (170)	2200	108—133 kPa (1.1—1.3 bar) (16—19 psi)
460D Skidder (Torque Converter) (Timberjack) (S.N. 589337—)	PE6068HDW59 (Tier 2)	135 (181)	2200	126—154 kPa (1.3—1.5 bar) (18—22 psi)
460D Skidder (Torque Converter) (Timberjack) (Europe)	PE6068HDW63 (Tier 2)	129 (173)	2200	119—146 kPa (1.2—1.5 bar) (17—21 psi)

Continued on next page

TURBO BOOST PRESSURES JOHN DEERE CONSTRUCTION AND FORESTRY EQUIPMENT				
Machine Model	**Engine Model**	**Rated Power at Full Load Rated Speed kW (hp)**	**Full Load Rated Speed rpm**	**Turbo Boost Pressure at Full Load Rated Speed kPa (bar) (psi)**
540G, 548G Skidder (S.N. 558205—565684)	T06068TDW51	94 (126)	2200	52—64 kPa (0.5—0.6 bar) (7—9 psi)
540G-II, 548G-II Skidder (S.N. 565685—576602)	T06068TDW54	94 (126)	2200	52—64 kPa (0.5—0.6 bar) (7—9 psi)
	PE6068TDW54	94 (126)	2200	52—64 kPa (0.5—0.6 bar) (7—9 psi)
540G-III, 548G-III Skidder (S.N. 576603—586336)	T06068TDW54	94 (126)	2200	52—64 kPa (0.5—0.6 bar) (7—9 psi)
	PE6068TDW54	94 (126)	2200	52—64 kPa (0.5—0.6 bar) (7—9 psi)
540G-III, 548G-III Skidder (S.N. 586337—)	PE6068TDW58 (Tier 2)	127 (170)	2200	86—105 kPa (0.9—1.0 bar) (12—15 psi)
640G, 648G Skidder (S.N. 558205—565684)	T06068TDW52	117 (157)	2200	94—114 kPa (0.9—1.1 bar) (14—17 psi)
640G-II, 648G-II Skidder (S.N. 565685—576602)	T06068TDW55	117 (157)	2200	94—114 kPa (0.9—1.1 bar) (14—17 psi)
	PE6068TDW55	117 (157)	2200	94—114 kPa (0.9—1.1 bar) (14—17 psi)
640G-III, 648G-III Skidder (Direct Drive) (S.N. 576603—586336)	T06068TDW55	117 (157)	2200	94—114 kPa (0.9—1.1 bar) (14—17 psi)
	PE6068TDW55	117 (157)	2200	94—114 kPa (0.9—1.1 bar) (14—17 psi)
640G-III, 648G-III Skidder (Direct Drive) (S.N. 589337—)	PE6068HDW60 (Tier 2)	125 (168)	2200	114—140 kPa (1.1—1.4 bar) (17—20 psi)
640G-III, 648G-III Skidder (Torque Converter) (S.N. —586336)	T06068TDW57	127 (170)	2200	108—133 kPa (1.1—1.3 bar) (16—19 psi)
	PE6068TDW57	127 (170)	2200	108—133 kPa (1.1—1.3 bar) (16—19 psi)
640G-III, 648G-III Skidder (Torque Converter) (S.N. 586337—)	PE6068HDW59 (Tier 2)	135 (181)	2200	126—154 kPa (1.3—1.5 bar) (18—22 psi)
640G-III, 648G-III Skidder (Torque Converter) (Europe)	PE6068HDW63 (Tier 2)	129 (173)	2200	119—146 kPa (1.2—1.5 bar) (17—21 psi)

Continued on next page

TURBO BOOST PRESSURES (JOHN DEERE OEM/OUTSIDE EQUIPMENT MANUFACTURERS)							
Engine Model (Emission Certification)	**Fuel System Option Code**	**Electronic Software Code**	**Injection Pump Part No.**	**Replacement Injection Pump**	**Rated Power at Full Load Rated Speed kW (hp)**	**Full Load Rated Speed rpm**	**Turbo Boost Pressure at Full Load Rated Speed kPa (bar) (psi)**
4045TF120 (Non—Certified)	16MT		RE503733	RE505989	70 (94)	1500	63—77 kPa (0.6—0.8 bar) (9—11 psi)
	16MT		RE506989		70 (94)	1500	63—77 kPa (0.6—0.8 bar) (9—11 psi)
	16MU		RE505050	RE506990	70 (94)	1500	63—77 kPa (0.6—0.8 bar) (9—11 psi)
	16MU		RE506990		70 (94)	1500	63—77 kPa (0.6—0.8 bar) (9—11 psi)
	16ZW		RE509527		70 (94)	1500	63—77 kPa (0.6—0.8 bar) (9—11 psi)
	16ZX		RE509528		70 (94)	1500	63—77 kPa (0.6—0.8 bar) (9—11 psi)
	16ZY		RE509529		63 (85) 70 (94)	1500	63—77 kPa (0.6—0.8 bar) (9—11 psi)
4045TF150 (Tier 1)	1605		RE69781		86 (115)	2500	97—119 kPa (1.0—1.2 bar) (14—17 psi)
	1606		RE64133	RE505927	93 (125)	2400	109—133 kPa (1.1—1.3 bar) (16—19 psi)
	1606		RE505927		93 (125)	2400	109—133 kPa (1.1—1.3 bar) (16—19 psi)
	1656		RE63610	RE67562	75 (100)	1800	65—79 kPa (0.7—0.8 bar) (9—12 psi)
	1656		RE67562		75 (100)	1800	65—79 kPa (0.7—0.8 bar) (9—12 psi)
	1675		RE69782		86 (115)	2500	96—118 kPa (1.0—1.2 bar) (14—18 psi)
	1676		RE60093	RE61668	86 (115)	2500	91—119 kPa (0.9—1.1 bar) (13—17 psi)
	1676		RE61668		86 (115)	2500	91—119 kPa (0.9—1.1 bar) (13—17 psi)
	1677		RE60096	RE67563	75 (100)	1800	65—79 kPa (0.7—0.8 bar) (9—12 psi)
	1677		RE67563		75 (100)	1800	65—79 kPa (0.7—0.8 bar) (9—12 psi)
	1692		RE61668	RE500881	86 (115)	2500	97—119 kPa (1.0—1.2 bar) (14—17 psi)
	1692		RE500881	RE502416	86 (115)	2500	97—119 kPa (1.0—1.2 bar) (14—17 psi)
	1692		RE502416		86 (115)	2500	97—119 kPa (1.0—1.2 bar) (14—17 psi)
	1694		RE67863	RE69779	74 (99)	2500	81—99 kPa (0.8—1.0 bar) (12—14 psi)
	1694		RE69779		74 (99)	2500	81—99 kPa (0.8—1.0 bar) (12—14 psi)
	1695		RE69739	RE69780	74 (99)	2500	81—99 kPa (0.8—1.0 bar) (12—14 psi)
	1695		RE69780		74 (99)	2500	81—99 kPa (0.8—1.0 bar) (12—14 psi)
	16AB		RE69779		75 (100)	2500	81—99 kPa (0.8—1.0 bar) (12—14 psi)
	16BF		RE500848		73 (98)	2200	66—80 kPa (0.7—0.8 bar) (10—12 psi)
	16CE		RE501180		74 (99)	2500	81—99 kPa (0.8—1.0 bar) (12—14 psi)
	16CM		RE501365		66 (89)	2200	56—68 kPa (0.6—0.7 bar) (8—10 psi)
	16GL		RE502706		78 (105)	2300	80—94 kPa (0.8—0.9 bar) (12—14 psi)
	16LP		RE67562		75 (101)	1800	65—79 kPa (0.7—0.8 bar) (9—11 psi)
	16LZ		RE503735		82 (110)	1800	85—99 kPa (0.9—1.0 bar) (12—14 psi)
	16MA		RE504696	RE504931	82 (110)	1800	85—99 kPa (0.9—1.0 bar) (12—14 psi)
	16MA		RE504931		82 (110)	1800	85—99 kPa (0.9—1.0 bar) (12—14 psi)
	16MT		RE503733	RE505050	70 (94)	1500	63—77 kPa (0.6—0.8 bar) (9—11 psi)
	16MT		RE505050		70 (94)	1500	63—77 kPa (0.6—0.8 bar) (9—11 psi)
	16MU		RE504695	RE505050	70 (94)	1500	63—77 kPa (0.6—0.8 bar) (9—11 psi)
	16MU		RE505050	RE506990	70 (94)	1500	63—77 kPa (0.6—0.8 bar) (9—11 psi)

Continued on next page

TURBO BOOST PRESSURES (JOHN DEERE OEM/OUTSIDE EQUIPMENT MANUFACTURERS)							
Engine Model (Emission Certification)	**Fuel System Option Code**	**Electronic Software Code**	**Injection Pump Part No.**	**Replacement Injection Pump**	**Rated Power at Full Load Rated Speed kW (hp)**	**Full Load Rated Speed rpm**	**Turbo Boost Pressure at Full Load Rated Speed kPa (bar) (psi)**
	16MU		RE506990		70 (94)	1500	63—77 kPa (0.6—0.8 bar) (9—11 psi)
	16TG		RE507941		77 (103)	2000	77—94 kPa (0.8—1.0 bar) (11—14 psi)
	16YJ		RE508834		77 (103)	2000	77—94 kPa (0.8—1.0 bar) (11—14 psi)
	16YU		RE508754		75 (101)	1800	65—79 kPa (0.7—0.8 bar) (9—11 psi)
4045TF151 (Tier 1)	1677		RE60096	RE67563	75 (101)	1800	65—79 kPa (0.7—0.8 bar) (9—11 psi)
	1677		RE67563		75 (101)	1800	65—79 kPa (0.7—0.8 bar) (9—11 psi)
	16CU		RE501192		80 (107)	2200	68—82 kPa (0.7—0.8 bar) (10—12 psi)
	16NH		RE505411		75 (101)	1800	65—79kPa (0.7—0.8 bar) (9—11 psi)
4045TF152 (Tier 1)	16AX		RE500551		76 (102)	2400	75—91 kPa (0.8—.09 bar) (11—13 psi)
4045TF154 (Tier 1)	1605		RE69781		86 (115)	2500	97—119 kPa (1.0—1.2 bar) (14—17 psi)
4045TF155 (Tier 1)	16AX		RE500551		76 (102)	2400	75—91 kPa (0.8—0.9 bar) (11—13 psi)
	16JT		RE500551		76 (102)	2400	75—91 kPa (0.8—0.9 bar) (11—13 psi)
4045TF157 (Tier 1)	16GQ		RE503048		83 (111)	1500	102—116 kPa (1.0—1.2 bar) (15—17 psi)
	16LV		RE503830		83 (111)	1500	102—116 kPa (1.0—1.2 bar) (15—17 psi)
4045TF158 (Tier 1)	16GQ		RE503048		83 (111)	1500	102—116 kPa (1.0—1.2 bar) (15—17 psi)
	16LZ		RE503735		82 (110)	1800	85—99 kPa (0.9—1.0 bar) (12—14 psi)
	16MA		RE504696		82 (110)	1800	85—99 kPa (0.9—1.0 bar) (12—14 psi)
	16MT		RE503733	RE506989	70 (94)	1500	63—77 kPa (0.6—0.8 bar) (9—11 psi)
	16MT		RE506989		70 (94)	1500	63—77 kPa (0.6—0.8 bar) (9—11 psi)
	16MU		RE504695	RE505050	70 (94)	1500	63—77 kPa (0.6—0.8 bar) (9—11 psi)
	16MU		RE505050	RE506990	70 (94)	1500	63—77 kPa (0.6—0.8 bar) (9—11 psi)
	16MU		RE506990		70 (94)	1500	63—77 kPa (0.6—0.8 bar) (9—11 psi)
4045TF161 (Tier 1)	16PZ		RE500848		73 (98)	2200	66—80 kPa (0.7—0.8 bar) (10—12 psi)
4045TF162 (Non—Certified)	16GL		RE502706		78(104)	2300	78—96 kPa (0.8—1.0 bar) (11—14 psi)
4045TF220 (Non—Certified)	16GQ		RE503048	RE506544	83 (111)	1500	102—116 kPa (1.0—1.2 bar) (15—17 psi)
	16GQ		RE506544		83 (111)	1500	102—116 kPa (1.0—1.2 bar) (15—17 psi)
	16LV		RE503830	RE506545	83 (111)	1500	102—116 kPa (1.0—1.2 bar) (15—17 psi)
	16LV		RE506545		83 (111)	1500	102—116 kPa (1.0—1.2 bar) (15—17 psi)
	16MT		RE503733		70 (94)	1500	63—77 kPa (0.6—0.8 bar) (9—11 psi)
	16MV		RE503736		100 (134)	1800	117—131 kPa (1.2—1.3 bar) (17—19 psi)

Continued on next page

TURBO BOOST PRESSURES (JOHN DEERE OEM/OUTSIDE EQUIPMENT MANUFACTURERS)							
Engine Model (Emission Certification)	**Fuel System Option Code**	**Electronic Software Code**	**Injection Pump Part No.**	**Replacement Injection Pump**	**Rated Power at Full Load Rated Speed kW (hp)**	**Full Load Rated Speed rpm**	**Turbo Boost Pressure at Full Load Rated Speed kPa (bar) (psi)**
	16MW		RE504682		100 (134)	1800	117—131 kPa (1.2—1.3 bar) (17—19 psi)
	16NT		RE504465		86 (115)	2500	86—100 kPa (0.9—1.0 bar) (12—15 psi)
	16NU		RE504466		86 (115)	2500	86—100 kPa (0.9—1.0 bar) (12—15 psi)
	16ZZ		RE508613		107 (143)	2100	86—100 kPa (0.9—1.0 bar) (12—15 psi)
	161A		RE509525		107 (143)	2100	86—100 kPa (0.9—1.0 bar) (12—15 psi)
	161B		RE509526		107 (143)	2100	86—100 kPa (0.9—1.0 bar) (12—15 psi)
4045TF250 (Tier 1)	1606		RE64133	RE505927	93 (125)	2400	109—133 kPa (1.1—1.3 bar) (16—19 psi)
	1606		RE505927		93 (125)	2400	109—133 kPa (1.1—1.3 bar) (16—19 psi)
	1608		RE67564		84 (113)	1800	82—100 kPa (0.8—1.0 bar) (12—15 psi)
	1667		RE59968		93 (125)	2400	109—133 kPa (1.1—1.3 bar) (16—19 psi)
	1682		RE67566		84 (113)	1800	82—100 kPa (0.8—1.0 bar) (12—15 psi)
	1683		RE60124	RE505926	93 (125)	2400	109—133 kPa (1.1—1.3 bar) (16—19 psi)
	1683		RE505926		93 (125)	2400	109—133 kPa (1.1—1.3 bar) (16—19 psi)
	160R		RE70941		84 (113)	1800	82—100 kPa (0.8—1.0 bar) (12—15 psi)
	16CV		RE501346		85 (114)	2200	79—97 kPa (0.8—1.0 bar) (12—14 psi)
	16LQ		RE67564		84 (113)	1800	82—100 kPa (0.8—1.0 bar) (12—15 psi)
	16MB		RE503737		91 (122)	1800	104—118 kPa (1.0—1.2 bar) (15—17 psi)
	16MC		RE504932		91 (122)	1800	104—118 kPa (1.0—1.2 bar) (15—17 psi)
	161C		RE506881		100 (134)	1800	112—137 kPa (1.1—1.4 bar) (16—20 psi)
	161D		RE506882		100 (134)	1800	112—137 kPa (1.1—1.4 bar) (16—20 psi)
4045TF251 (Tier 1)	1606		RE64133	RE505927	93 (125)	2400	109—133 kPa (1.1—1.3 bar) (16—19 psi)
	1606		RE505927		93 (125)	2400	109—133 kPa (1.1—1.3 bar) (16—19 psi)
4045TF252 (Tier 1)	169P		RE522714		119 (160)	3000	170—208 kPa (1.7—2.0 bar) (25—30 psi)
	169Q		RE522697		119 (160)	3000	170—208 kPa (1.7—2.0 bar) (25—30 psi)
4045TF253 (Tier 1)	16TE		RE507257		85 (114)	2400	88—108 kPa (0.9—1.0 bar) (12—15 psi)
4045TF254 (Tier 1)			RE523458		119 (160)	3000	Not Available
4045TF257 (Tier 1)	16GQ		RE503048		83 (111)	1500	102—116 kPa (1.0—1.2 bar) (15—17 psi)

Continued on next page

TURBO BOOST PRESSURES (JOHN DEERE OEM/OUTSIDE EQUIPMENT MANUFACTURERS)							
Engine Model (Emission Certification)	**Fuel System Option Code**	**Electronic Software Code**	**Injection Pump Part No.**	**Replacement Injection Pump**	**Rated Power at Full Load Rated Speed kW (hp)**	**Full Load Rated Speed rpm**	**Turbo Boost Pressure at Full Load Rated Speed kPa (bar) (psi)**
	16LV		RE503830		83 (111)	1500	102—116 kPa (1.0—1.2 bar) (15—17 psi)
4045TF258 (Tier 1)	16GQ		RE503048		83 (111)	1500	102—116 kPa (1.0—1.2 bar) (15—17 psi)
	16LV		RE503830		83 (111)	1500	102—116 kPa (1.0—1.2 bar) (15—17 psi)
	16MB		RE503737		91 (122)	1800	104—118 kPa (1.0—1.2 bar) (15—17 psi)
	16MC		RE504932		91 (122)	1800	104—118 kPa (1.0—1.2 bar) (15—17 psi)
	16MV		RE503736		100 (134)	1800	117—131 kPa (1.2—1.3 bar) (17—19 psi)
	16MW		RE504682		100 (134)	1800	117—131 kPa (1.2—1.3 bar) (17—19 psi)
4045TF270 (Tier 2)	163N, 164X		RE519069		74 (99)	1800	78—96 kPa (0.8—1.0 bar) (11—14 psi)
	164Y		RE519070		74 (99)	1800	78—96 kPa (0.8—1.0 bar) (11—14 psi)
	164V		RE519029		74 (99)	2500	83—101 kPa (0.8—1.0 bar) (12—15 psi)
	164W		RE519030		74 (99)	2500	83—101 kPa (0.8—1.0 bar) (12—15 psi)
	164T		RE519027		74 (99)	2200	72—88 kPa (0.7—0.9 bar) (11—13 psi)
	164U		RE519028		74 (99)	2200	72—88 kPa (0.7—0.9 bar) (11—13 psi)
	164R		RE519025		63 (84)	2500	66—80 kPa (0.7—0.8 bar) (10—12 psi)
	164S		RE519026		63 (84)	2500	66—80 kPa (0.7—0.8 bar) (10—12 psi)
4045TF271	167P		RE520430		74 (99)	2300	72—88 kPa (0.7—0.9 bar) (10—13 psi)
4045TF275 (Tier 2)	161K, 163H (12V)	7288	RE515464		86 (115)	2500	114—140 kPa (1.1—1.4 bar) (17—20 psi)
	161L, 163L (24V)	7289	RE515464		86 (115)	2500	114—140 kPa (1.1—1.4 bar) (17—20 psi)
	161K, 163H (12V)	7290	RE515464		82 (110)	2400	98—120 kPa (1.0—1.2 bar) (14—17 psi)
	161L, 163L (24V)	7291	RE515464		82 (110)	2400	98—120 kPa (1.0—1.2 bar) (14—17 psi)
	161K, 163H (12V)	7292	RE515464		84 (112)	1800	110—134 kPa (1.1—1.3 bar) (16—19 psi)
	161L, 163L (24V)	7293	RE515464		84 (112)	1800	110—134 kPa (1.1—1.3 bar) (16—19 psi)

Continued on next page

TURBO BOOST PRESSURES (JOHN DEERE OEM/OUTSIDE EQUIPMENT MANUFACTURERS)							
Engine Model (Emission Certification)	**Fuel System Option Code**	**Electronic Software Code**	**Injection Pump Part No.**	**Replacement Injection Pump**	**Rated Power at Full Load Rated Speed kW (hp)**	**Full Load Rated Speed rpm**	**Turbo Boost Pressure at Full Load Rated Speed kPa (bar) (psi)**
4045TFM50 (Non—Certified Marine)	16HM		RE503163		65 (87)	1800	36—44 kPa (0.4—0.5 bar) (6—7 psi)
	16HN		RE503162		65 (87)	1800	36—44 kPa (0.4—0.5 bar) (6—7 psi)
	16HP		RE503861		101 (135)	2500	95—117 kPa (1.0—1.2 bar) (14—17 psi)
	16HQ		RE503860		101 (135)	2500	95—117 kPa (1.0—1.2 bar) (14—17 psi)
	16LK		RE503160		112 (150)	2600	128—156 kPa (1.3—1.6 bar) (19—23 psi)
	16LL		RE503161		112 (150)	2600	128—156 kPa (1.3—1.6 bar) (19—23 psi)
4045TFM75 (Tier 2 Marine)			RE518167	RE518086	62 (83)	1500	29— 35 kPa (0.3—0.4 bar) (4—5 psi)
			RE518086		62 (83)	1500	29— 35 kPa (0.3—0.4 bar) (4—5 psi)
			RE518167	RE518086	62 (83)	1500	29— 35 kPa (0.3—0.4 bar) (4—5 psi)
			RE518086		62 (83)	1500	29— 35 kPa (0.3—0.4 bar) (4—5 psi)
	166M (12V)	72FP	RE518167	RE518086	79 (106)	2400	72—88 kPa (0.7—0.9 bar) (10—13 psi)
			RE518086		79 (106)	2400	72—88 kPa (0.7—0.9 bar) (10—13 psi)
	166N (24V)	72FQ	RE518167	RE518086	79 (106)	2400	72—88 kPa (0.7—0.9 bar) (10—13 psi)
			RE518086		79 (106)	2400	72—88 kPa (0.7—0.9 bar) (10—13 psi)
	166M (12V)	72FR	RE518167	RE518086	90 (121)	2500	97—119 kPa (1.0—1.2 bar) (14—17 psi)
			RE518086		90 (121)	2500	97—119 kPa (1.0—1.2 bar) (14—17 psi)
	166N (24V)	72FS	RE518167	RE518086	90 (121)	2500	97—119 kPa (1.0—1.2 bar) (14—17 psi)
			RE518086		90 (121)	2500	97—119 kPa (1.0—1.2 bar) (14—17 psi)
	161M (12V)	72EF	RE518167	RE518086	101 (135)	2600	128—156 kPa (1.3—1.6 bar) (19—23 psi)
			RE518086		101 (135)	2600	128—156 kPa (1.3—1.6 bar) (19—23 psi)
	166N (24V)	72EG	RE518167	RE518086	101 (135)	2600	128—156 kPa (1.3—1.6 bar) (19—23 psi)
			RE518086		101 (135)	2600	128—156 kPa (1.3—1.6 bar) (19—23 psi)
	168G (12V)	72EH	RE518167	RE518086	56 (75)	1500	28—35 kPa (0.3—0.4 bar) (4—5 psi)
			RE518086		56 (75)	1500	28—35 kPa (0.3—0.4 bar) (4—5 psi)

Continued on next page

TURBO BOOST PRESSURES (JOHN DEERE OEM/OUTSIDE EQUIPMENT MANUFACTURERS)							
Engine Model (Emission Certification)	**Fuel System Option Code**	**Electronic Software Code**	**Injection Pump Part No.**	**Replacement Injection Pump**	**Rated Power at Full Load Rated Speed kW (hp)**	**Full Load Rated Speed rpm**	**Turbo Boost Pressure at Full Load Rated Speed kPa (bar) (psi)**
	168H (24V)	72EJ	RE518167	RE518086	56 (75)	1500	28—35 kPa (0.3—0.4 bar) (4—5 psi)
			RE518086		56 (75)	1500	28—35 kPa (0.3—0.4 bar) (4—5 psi)
	168J (12V)	72EK	RE518167	RE518086	80 (107)	1800	60—74 kPa (0.6—0.7 bar) (9—11 psi)
			RE518086		80 (107)	1800	60—74 kPa (0.6—0.7 bar) (9—11 psi)
	168K (24V)	72EL	RE518167	RE518086	80 (107)	1800	60—74 kPa (0.6—0.7 bar) (9—11 psi)
			RE518086		80 (107)	1800	60—74 kPa (0.6—0.7 bar) (9—11 psi)
4045HF120 (Non—Certified)	16GR		RE503050	RE506965	102 (137)	1500	123—150 kPa (1.2—1.5 bar) (18—22 psi)
	16GR		RE506965		102 (137)	1500	123—150 kPa (1.2—1.5 bar) (18—22 psi)
	16LW		RE503832	RE506966	102 (137)	1500	123—150 kPa (1.2—1.5 bar) (18—22 psi)
	16LW		RE506966		102 (137)	1500	123—150 kPa (1.2—1.5 bar) (18—22 psi)
4045HF150 (Tier 1)	1610		RE68826	RE505928	104 (140)	2400	99—121 kPa (1.0—1.2 bar) (14—18 psi)
	1610		RE505928		104 (140)	2400	99—121 kPa (1.0—1.2 bar) (14—18 psi)
	1611		RE60237		95 (127)	1800	85—103 kPa (0.9—1.0 bar) (12—15 psi)
	160B		RE68827		95 (127)	1800	85—103 kPa (0.9—1.0 bar) (12—15 psi)
	160C		RE69588	RE505959	104 (140)	2400	99—121 kPa (1.0—1.2 bar) (14—18 psi)
	160C		RE505959		104 (140)	2400	99—121 kPa (1.0—1.2 bar) (14—18 psi)
	16ME (12V)		RE503739		123 (165)	1800	135—165 kPa (1.3—1.7 bar) (20—24 psi)
	16MF (24V)		RE504966		123 (165)	1800	135—165 kPa (1.3—1.7 bar) (20—24 psi)
4045HF152 (Tier 1)	16RM		RE505959		104 (140)	2400	99—121 kPa (1.0—1.2 bar) (14—18 psi)
4045HF157 (Tier 1)	16GR		RE503050		102 (137)	1500	123—150 kPa (1.2—1.5 bar) (18—22 psi)
	16LW		RE503832		102 (137)	1500	123—150 kPa (1.2—1.5 bar) (18—22 psi)
4045HF158 (Tier 1)	16GR		RE503050		102 (137)	1500	123—150 kPa (1.2—1.5 bar) (18—22 psi)

Continued on next page

TURBO BOOST PRESSURES (JOHN DEERE OEM/OUTSIDE EQUIPMENT MANUFACTURERS)							
Engine Model (Emission Certification)	**Fuel System Option Code**	**Electronic Software Code**	**Injection Pump Part No.**	**Replacement Injection Pump**	**Rated Power at Full Load Rated Speed kW (hp)**	**Full Load Rated Speed rpm**	**Turbo Boost Pressure at Full Load Rated Speed kPa (bar) (psi)**
	16LW		RE503832		102 (137)	1500	123—150 kPa (1.2—1.5 bar) (18—22 psi)
	16ME		RE503739		123 (165)	1800	143—157 kPa (1.4—1.6 bar) (21—23 psi)
	16MF		RE504698	RE504966	123 (165)	1800	135—165 kPa (1.3—1.7 bar) (20—24 psi)
	16MF		RE504966		123 (165)	1800	143—157 kPa (1.4—1.6 bar) (21—23 psi)
4045HF252			RE522414		125 (168)	3000	154—188 kPa (1.5—1.9 bar) (22—27 psi)
			RE522698		125 (168)	3000	154—188 kPa (1.5—1.9 bar) (22—27 psi)
	169E		RE522414		152 (204)	3000	179—219 kPa (1.8—2.2 bar) (26—32 psi)
	169F		RE522698		152 (204)	3000	179—219 kPa (1.8—2.2 bar) (26—32 psi)
4045HF254				RE522933	152 (204)	3000	Not Available
4045HF275 (Tier 2)	161F, 163G (12V)	7262	RE507968	RE518167	104 (140)	2400	101—123 kPa (1.0—1.2 bar) (15—17 psi)
			RE518167		104 (140)	2400	101—123 kPa (1.0—1.2 bar) (15—17 psi)
	161G, 163K (24V)	7263	RE507968	RE518167	104 (140)	2400	101—123 kPa (1.0—1.2 bar) (15—17 psi)
			RE518167		104 (140)	2400	101—123 kPa (1.0—1.2 bar) (15—17 psi)
	161F, 163G (12V)	7264	RE507968	RE518167	93 (125)	2400	90—109 kPa (0.9—1.1 bar) (13—15 psi)
			RE518167		93 (125)	2400	90—109 kPa (0.9—1.1 bar) (13—15 psi)
	161G, 163K (24V)	7265	RE507968	RE518167	93 (125)	2400	90—109 kPa (0.9—1.1 bar) (13—15 psi)
			RE518167		93 (125)	2400	90—109 kPa (0.9—1.1 bar) (13—15 psi)
	161F, 163G (12V)	7266	RE507968	RE518167	93 (125)	2200	85—105 kPa (0.9—1.1 bar) (13—15 psi)
			RE518167		93 (125)	2200	85—105 kPa (0.9—1.1 bar) (13—15 psi)

Continued on next page

TURBO BOOST PRESSURES (JOHN DEERE OEM/OUTSIDE EQUIPMENT MANUFACTURERS)							
Engine Model (Emission Certification)	**Fuel System Option Code**	**Electronic Software Code**	**Injection Pump Part No.**	**Replacement Injection Pump**	**Rated Power at Full Load Rated Speed kW (hp)**	**Full Load Rated Speed rpm**	**Turbo Boost Pressure at Full Load Rated Speed kPa (bar) (psi)**
	161G, 163K (24V)	7267	RE507968	RE518167	93 (125)	2200	85—105 kPa (0.9—1.1 bar) (13—15 psi)
			RE518167		93 (125)	2200	85—105 kPa (0.9—1.1 bar) (13—15 psi)
	161F, 163G (12V)	7268	RE507968	RE518167	86 (115)	2000	64—78 kPa (0.6—0.8 bar) (9—11 psi)
			RE518167		86 (115)	2000	64—78 kPa (0.6—0.8 bar) (9—11 psi)
	161G, 163K (24V)	7269	RE507968	RE518167	86 (115)	2000	64—78 kPa (0.6—0.8 bar) (9—11 psi)
			RE518167		86 (115)	2000	64—78 kPa (0.6—0.8 bar) (9—11 psi)
	161F, 163G (12V)	7270	RE507968	RE518167	108 (145)	1800	117—143 kPa (1.2—1.4 bar) (17—21 psi)
			RE518167		108 (145)	1800	117—143 kPa (1.2—1.4 bar) (17—21 psi)
	161G, 163K (24V)	7271	RE507968	RE518167	108 (145)	1800	117—143 kPa (1.2—1.4 bar) (17—21 psi)
			RE518167		108 (145)	1800	117—143 kPa (1.2—1.4 bar) (17—21 psi)
	161F, 163G (12V)	7272	RE507968	RE518167	117 (157)	1800	135—165 kPa (1.3—1.7 bar) (20—24 psi)
			RE518167		117 (157)	1800	135—165 kPa (1.3—1.7 bar) (20—24 psi)
	161G, 163K (24V)	7273	RE507968	RE518167	117 (157)	1800	135—165 kPa (1.3—1.7 bar) (20—24 psi)
			RE518167		117 (157)	1800	135—165 kPa (1.3—1.7 bar) (20—24 psi)
	161F, 163G (12V)		RE507968	RE518167	90 (120)	1500	115—145 kPa (1.1—1.5 bar) (17—21 psi)
			RE518167		90 (120)	1500	115—145 kPa (1.1—1.5 bar) (17—21 psi)
	161G, 163K (24V)		RE507968	RE518167	90 (120)	1500	115—145 kPa (1.1—1.5 bar) (17—21 psi)
			RE518167		90 (120)	1500	115—145 kPa (1.1—1.5 bar) (17—21 psi)

Continued on next page

TURBO BOOST PRESSURES (JOHN DEERE OEM/OUTSIDE EQUIPMENT MANUFACTURERS)							
Engine Model (Emission Certification)	**Fuel System Option Code**	**Electronic Software Code**	**Injection Pump Part No.**	**Replacement Injection Pump**	**Rated Power at Full Load Rated Speed kW (hp)**	**Full Load Rated Speed rpm**	**Turbo Boost Pressure at Full Load Rated Speed kPa (bar) (psi)**
	161G, 163K (24V)	72BB	RE507968	RE518167	93 (125)	2400	84—102 kPa (0.8—1.0 bar) (12—15 psi)
			RE518167		93 (125)	2400	84—102 kPa (0.8—1.0 bar) (12—15 psi)
	161F, 163G (12V)		RE507968	RE518167	99 (133)	1500	120—150 kPa (1.2—1.5 bar) (17—22 psi)
			RE518167		99 (133)	1500	120—150 kPa (1.2—1.5 bar) (17—22 psi)
	161G, 163K (24V)		RE507968	RE518167	99 (133)	1500	120—150 kPa (1.2—1.5 bar) (17—22 psi)
			RE518167		99 (133)	1500	120—150 kPa (1.2—1.5 bar) (17—22 psi)
	161F, 163G (12V)	72BD	RE507968	RE518167	104 (140)	2200	115—141 kPa (1.2—1.4 bar) (17—21 psi)
			RE518167		104 (140)	2200	115—141 kPa (1.2—1.4 bar) (17—21 psi)
	161G, 163K	72BE			104 (140)	2200	115—141 kPa (1.2—1.4 bar) (17—21 psi)
			RE518167		104 (140)	2200	115—141 kPa (1.2—1.4 bar) (17—21 psi)
4045HF475 (4-Valve) (Tier 2)	161V (12V)	72AT			129 (173)	2400	153—187 kPa (1.5—1.9 bar) (22—27 psi)
	161V (12V)	72AU			119 (160)	2200	132—162 kPa (1.3—1.6 bar) (19—23 psi)
	161V (12V)	72AV			143 (192)	1800	163—200 kPa (1.6—2.0 bar) (24—29 psi)
	161V (12V)	72AW			120 (161)	1500	120—145 kPa (1.2—1.5 bar) (17—21 psi)
	161V (12V)	72CX			129 (173)	2200	156—190 kPa (1.6—1.9 bar) (23—28 psi)
	165A (24V)	72CL			129 (173)	2400	153—187 kPa (1.5—1.9 bar) (22—27 psi)
	165A (24V)	72CY			129 (173)	2200	156—190 kPa (1.6—1.9 bar) (23—28 psi)
	165A (24V)	72CM			119 (160)	2200	132—162 kPa (1.3—1.6 bar) (19—23 psi)
	165A (24V)	72CN			143 (192)	1800	163—200 kPa (1.6—2.0 bar) (24—29 psi)

06
210
51

Continued on next page

TURBO BOOST PRESSURES (JOHN DEERE OEM/OUTSIDE EQUIPMENT MANUFACTURERS)							
Engine Model (Emission Certification)	**Fuel System Option Code**	**Electronic Software Code**	**Injection Pump Part No.**	**Replacement Injection Pump**	**Rated Power at Full Load Rated Speed kW (hp)**	**Full Load Rated Speed rpm**	**Turbo Boost Pressure at Full Load Rated Speed kPa (bar) (psi)**
	165A (24V)	72CP			120(161)	1500	120—145 kPa (1.2—1.5 bar) (17—21 psi)
6068TF120 (Non—Certified)	16MX		RE503740		105 (141)	1500	85—99 kPa (0.9—1.0 bar) (12—14 psi)
	16MY		RE505052		105 (141)	1500	85—99 kPa (0.9—1.0 bar) (12—14 psi)
6068TF150 (Tier 1)	1614		RE61669	RE69789	127 (170)	2500	95—116 kPa (1.0—1.2 bar) (14—17 psi)
	1614		RE69789		127 (170)	2500	95—114 kPa (1.0—1.1 bar) (14—17 psi)
	1680		RE60105	RE69790	127 (170)	2500	95—116 kPa (1.0—1.2 bar) (14—17 psi)
	1680		RE69790		127 (170)	2500	95—114 kPa (1.0—1.1 bar) (14—17 psi)
	1681		RE60107	RE67571	112 (150)	1800	80—98 kPa (0.8—1.0 bar) (12—14 psi)
	1681		RE67571		112 (150)	1800	80—98 kPa (0.8—1.0 bar) (12—14 psi)
	1688		RE67572		112 (150)	1800	80—98 kPa (0.8—1.0 bar) (12—14 psi)
	1696		RE67864	RE69787	116 (155)	2500	85—105 kPa (0.8—1.1 bar) (12—15 psi)
	1696		RE69787		116 (155)	2500	85—105 kPa (0.8—1.1 bar) (12—15 psi)
	1697		RE68740	RE69788	116 (155)	2500	85—105 kPa (0.8—1.1 bar) (12—15 psi)
	1697		RE69788		116 (155)	2500	85—105 kPa (0.8—1.1 bar) (12—15 psi)
	16BE		RE63559	RE501302	117 (157)	2200	79—97 kPa (0.8—1.0 bar) (12—14 psi)
	16BE		RE501302		117 (157)	2200	79—97 kPa (0.8—1.0 bar) (12—14 psi)
	16CN		RE501522	RE509681	110 (148)	2100	76—94 kPa (0.8—0.9 bar) (11—14 psi)
	16CN		RE509681		110 (148)	2100	76—94 kPa (0.8—0.9 bar) (11—14 psi)
	16CP		RE501523		94 (126)	2200	52—64 kPa (0.5—0.6 bar) (7—9 psi)
	16DK		RE70938		96 (129)	2100	58—70 kPa (0.6—0.7 bar) (8—10 psi)
	16DY		RE501758		116 (155)	2500	85—105 kPa (0.8—1.1 bar) (12—15 psi)

Continued on next page

TURBO BOOST PRESSURES (JOHN DEERE OEM/OUTSIDE EQUIPMENT MANUFACTURERS)							
Engine Model (Emission Certification)	**Fuel System Option Code**	**Electronic Software Code**	**Injection Pump Part No.**	**Replacement Injection Pump**	**Rated Power at Full Load Rated Speed kW (hp)**	**Full Load Rated Speed rpm**	**Turbo Boost Pressure at Full Load Rated Speed kPa (bar) (psi)**
	16GM		RE502693		110 (148)	2300	67—81 kPa (0.7—0.8 bar) (10—12 psi)
	16GN		RE5027047		116 (156)	2400	77—91 kPa (0.8—0.9 bar) (11—13 psi)
	16LS		RE67572		112 (150)	1800	47—57 kPa (0.5—0.6 bar) (7—9 psi)
	16MG		RE503742		123 (165)	1800	78—82 kPa (0.8 bar) (11—12 psi)
	16MH		RE504967		123 (165)	1800	78—82 kPa (0.8 bar) (11—12 psi)
6068TF151 (Tier 1)	1681		RE60107	RE67571	112 (150)	1800	80—98 kPa (0.8—1.0 bar) (12—14 psi)
	1681		RE67571		112 (150)	1800	80—98 kPa (0.8—1.0 bar) (12—14 psi)
	16NJ		RE505358		112 (150)	1800	80—98 kPa (0.8—1.0 bar) (12—14 psi)
6068TF152 (Tier 1)	1696		RE69787		116 (155)	2500	85—105 kPa (0.9—1.1 bar) (12—15 psi)
	16JU		RE69787		116 (155)	2500	85—105 kPa (0.9—1.1 bar) (12—15 psi)
6068TF157 (Tier 1)	16GS		RE503049		121 (162)	1500	86—100 kPa (0.9—1.0 bar) (12—15 psi)
	16LX		RE503834		121 (162)	1500	86—100 kPa (0.9—1.0 bar) (12—15 psi)
6068TF158 (Tier 1)	16GS		RE503049		121 (162)	1500	86—100 kPa (0.9—1.0 bar) (12—15 psi)
	165H		RE503740		105 (141)	1500	85—99 kPa (0.9—1.0 bar) (12—14 psi)
	165J		RE503740		105 (141)	1500	85—99 kPa (0.9—1.0 bar) (12—14 psi)
	16MG		RE503742		123 (165)	1800	78—82 kPa (0.8 bar) (11—12 psi)
	16MH		RE504966	RE504967	123 (165)	1800	78—82 kPa (0.8 bar) (11—12 psi)
	16MH		RE504967		123 (165)	1800	78—82 kPa (0.8 bar) (11—12 psi)
	16MX		RE503740		105 (141)	1500	85—99 kPa (0.9—1.0 bar) (12—14 psi)
	16MY		RE504699	RE505052	105 (141)	1500	85—99 kPa (0.9—1.0 bar) (12—14 psi)

06
210
53

Continued on next page

TURBO BOOST PRESSURES (JOHN DEERE OEM/OUTSIDE EQUIPMENT MANUFACTURERS)							
Engine Model (Emission Certification)	**Fuel System Option Code**	**Electronic Software Code**	**Injection Pump Part No.**	**Replacement Injection Pump**	**Rated Power at Full Load Rated Speed kW (hp)**	**Full Load Rated Speed rpm**	**Turbo Boost Pressure at Full Load Rated Speed kPa (bar) (psi)**
	16MY		RE505052		105 (141)	1500	85—99 kPa (0.9—1.0 bar) (12—14 psi)
6068TF159 (Tier 1)	16PD		RE70938		96 (129)	2100	58—70 kPa (0.6—0.7 bar) (8—10 psi)
6068TF220 (Non—Certified)	16GS		RE503049		121 (162)	1500	86—100 kPa (0.9—1.0 bar) (12—14 psi)
	16KK		RE502694		127 (170)	2500	75—89 kPa (0.8—0.9 bar) (11—13 psi)
	16LX		RE503836		121 (162)	1500	86—100 kPa (0.9—1.0 bar) (12—14 psi)
	16RK		RE506083		138 (185)	2600	121—147 kPa (1.2—1.5 bar) (18—21 psi)
	16RJ		RE506084		172 (231)	2100	158—194 kPa (1.6—1.9 bar) (23—28 psi)
	16SG		RE506625		172 (231)	2100	158—194 kPa (1.6—1.9 bar) (23—28 psi)
	16SH		RE506626		138 (185)	2600	121—147 kPa (1.2—1.5 bar) (18—21 psi)
	16ZL		RE509284		172 (128)	2100	158—194 kPa (1.6—1.9 bar) (23—28 psi)
	16ZM		RE509285		172 (128)	2100	158—194 kPa (1.6—1.9 bar) (23—28 psi)
	16ZN		RE509286		138 (103)	2600	121—147 kPa (1.2—1.5 bar) (18—21 psi)
	16ZP		RE509287		138 (103)	2600	121—147 kPa (1.2—1.5 bar) (18—21 psi)
6068TF250 (Tier 1)	1615		RE62366	RE69791	138 (185)	2400	110—134 kPa (1.1—1.3 bar) (16—19 psi)
	1615		RE69791		138 (185)	2400	110—134 kPa (1.1—1.3 bar) (16—19 psi)
	1619		RE67573		124 (166)	1800	88—108 kPa (0.9—1.1 bar) (13—16 psi)
	1668		RE59969		138 (185)	2400	115—141 kPa (1.2—1.4 bar) (17—20 psi)
	1685		RE67574		124 (166)	1800	88—108 kPa (0.9—1.1 bar) (13—16 psi)
	1686		RE60131	RE69792	138 (185)	2400	110—134 kPa (1.1—1.3 bar) (16—19 psi)
	1686		RE69792		138 (185)	2400	110—134 kPa (1.1—1.3 bar) (16—19 psi)

Continued on next page

TURBO BOOST PRESSURES (JOHN DEERE OEM/OUTSIDE EQUIPMENT MANUFACTURERS)							
Engine Model (Emission Certification)	**Fuel System Option Code**	**Electronic Software Code**	**Injection Pump Part No.**	**Replacement Injection Pump**	**Rated Power at Full Load Rated Speed kW (hp)**	**Full Load Rated Speed rpm**	**Turbo Boost Pressure at Full Load Rated Speed kPa (bar) (psi)**
	16CW		RE501344		106 (142)	2200	74—88 kPa (0.7—0.9 bar) (11—13 psi)
	16CX		RE70390		128 (172)	2300	100—122 kPa (1.0—1.2 bar) (15—18 psi)
	16LT		RE69791		138 (185)	2400	110—134 kPa (1.1—1.3 bar) (16—19 psi)
	16LU		RE67573		124 (166)	1800	88—108 kPa (0.9—1.1 bar) (13—16 psi)
	16MJ		RE503744		142 (190)	1800	109—123 kPa (1.1—1.2 bar) (16—18 psi)
	16MK		RE504701	RE504968	142 (190)	1800	109—123 kPa (1.1—1.2 bar) (16—18 psi)
	16MK		RE504968		142 (190)	1800	109—123 kPa (1.1—1.2 bar) (16—18 psi)
	16UG		RE506956	RE504321	149 (200)	2400	150—184 kPa (1.5—1.8 bar) (22—27 psi)
	16UG		RE504321		149 (200)	2400	150—184 kPa (1.5—1.8 bar) (22—27 psi)
	16YH		RE59959		138 (185)	2400	110—134 kPa (1.1—1.3 bar) (16—19 psi)
			RE504321		138 (185)	2400	110—134 kPa (1.1—1.3 bar) (16—19 psi)
6068TF251 (Tier 1)	1615		RE62366		138 (185)	2400	110—134 kPa (1.1—1.3 bar) (16—19 psi)
	16ZH		RE62366		138 (185)	2400	110—134 kPa (1.1—1.3 bar) (16—19 psi)
6068TF257 (Tier 1)	16GS		RE503049		121 (162)	1500	86—100 kPa (0.9—1.0 bar) (12—15 psi)
	16LX		RE503834		155 (208)	1500	138—152 kPa (1.4—1.5 bar) (20—22 psi)
6068TF258 (Tier 1)	16GS		RE503049		121 (162)	1500	86—100 kPa (0.9—1.0 bar) (12—15 psi)
	16LX		RE503834		155 (208)	1500	138—152 kPa (1.4—1.5 bar) (20—22 psi)
	16MJ		RE503744		142 (190)	1800	109—123 kPa (1.1—1.2 bar) (16—18 psi)
	16MK		RE504701	RE504968	142 (190)	1800	109—123 kPa (1.1—1.2 bar) (16—18 psi)
	16MK		RE504968		142 (190)	1800	109—123 kPa (1.1—1.2 bar) (16—18 psi)

Continued on next page

TURBO BOOST PRESSURES (JOHN DEERE OEM/OUTSIDE EQUIPMENT MANUFACTURERS)							
Engine Model (Emission Certification)	**Fuel System Option Code**	**Electronic Software Code**	**Injection Pump Part No.**	**Replacement Injection Pump**	**Rated Power at Full Load Rated Speed kW (hp)**	**Full Load Rated Speed rpm**	**Turbo Boost Pressure at Full Load Rated Speed kPa (bar) (psi)**
6068TF275 (Tier 2)	161H 163F	72AB (12V)	RE515679		101 (135)	2200	95—116 kPa (1.0—1.2 bar) (14—17 psi)
	161J 163M	72AC (24V)	RE515679		101 (135)	2200	95—116 kPa (1.0—1.2 bar) (14—17 psi)
	161H 163F	72AF (12V)	RE515679		104 (140)	2000	91—111 kPa (0.9—1.1 bar) (13—15 psi)
	161J 163M	72AG (24V)	RE515679		104 (140)	2000	91—111 kPa (0.9—1.1 bar) (13—15 psi)
	161H 163F	72AD (12V)	RE515679		112 (150)	2200	113—139 kPa (1.1—1.4 bar) (16—20 psi)
	161J 163M	72AE (24V)	RE515679		112 (150)	2200	113—139 kPa (1.1—1.4 bar) (16—20 psi)
	161H 163F	7294 (12V)	RE515679		116 (155)	2500	119—146 kPa (1.2—1.5 bar) (17—21 psi)
	161J 163M	7295 (24V)	RE515679		116 (155)	2500	119—146 kPa (1.2—1.5 bar) (17—21 psi)
	161H 163F	72AH (12V)	RE515679		123 (165)	1800	116—141 kPa (1.2—1.4 bar) (17—20 psi)
	161J 163M	72AJ (24V)	RE515679		123 (165)	1800	116—141 kPa (1.2—1.4 bar) (17—20 psi)
	161H 163F	7298 (12V)	RE515679		123 (165)	2400	125—152 kPa (1.3—1.5 bar) (18—22 psi)
	161J 163M	72AA (24V)	RE515679		123 (165)	2400	125—152 kPa (1.3—1.5 bar) (18—22 psi)
	161H 163F	7296 (12V)	RE515679		127 (170)	2500	136—167 kPa (1.4—1.7 bar) (20—24 psi)
	161J 163M	7297 (24V)	RE515679		127 (170)	2500	136—167 kPa (1.4—1.7 bar) (20—24 psi)
	161J 163M	72BC (24V)	RE515679		127 (170)	2500	136—167 kPa (1.4—1.7 bar) (20—24 psi)
6068TFM50 (Non—Certified Marine)	16FA		RE502619		168 (225)	2600	140—170 kPa (1.4—1.6 bar) (20—24 psi)
	16FB		RE502620		168 (225)	2600	140—170 kPa (1.4—1.6 bar) (20—24 psi)
	16FC		RE502621		130 (174)	2400	94—114 kPa (0.9—1.0 bar) (14—17 psi)
	16FD		RE502622		130 (174)	2400	94—114 kPa (0.9—1.0 bar) (14—17 psi)

Continued on next page

TURBO BOOST PRESSURES (JOHN DEERE OEM/OUTSIDE EQUIPMENT MANUFACTURERS)							
Engine Model (Emission Certification)	**Fuel System Option Code**	**Electronic Software Code**	**Injection Pump Part No.**	**Replacement Injection Pump**	**Rated Power at Full Load Rated Speed kW (hp)**	**Full Load Rated Speed rpm**	**Turbo Boost Pressure at Full Load Rated Speed kPa (bar) (psi)**
	16FE		RE502623		110 (148)	1800	81—99 kPa (0.8—1.0 bar) (12—14 psi)
	16FF		RE502624		110 (148)	1800	81—99 kPa (0.8—1.0 bar) (12—14 psi)
6068TFM75 (Tier 2 Marine)	167Q	72GD	RE515887		118 (158)	2400	61—75 kPa (0.6—0.8 bar) (9—11 psi)
	167R	72GE	RE515888		118 (158)	2400	61—75 kPa (0.6—0.8 bar) (9—11 psi)
	167Q	72GF	RE515887		133 (178)	2500	88—108 kPa (0.9—1.1 bar) (13—16 psi)
	167R	72GG	RE515888		133 (178)	2500	88—108 kPa (0.9—1.1 bar) (13—16 psi)
	161E, 167Q	72EP	RE515887		150 (200)	2600	112—137 kPa (1.1—1.4 bar) (16—20 psi)
	162K, 167R	72EQ	RE515888		150 (200)	2600	112—137 kPa (1.1—1.4 bar) (16—20 psi)
6068TFM76 (Tier 2 Marine)	167S, 167T	72ER, 72ES	RE518165		98 (131)	1500	70—86 kPa (0.7—0.9 bar) (10—12 psi)
	167L, 167M	72ET, 72EU	RE518164		121 (162)	1800	135—165 kPa (1.3—1.7 bar) (20—24 psi)
6068SFM50 (Non-Certified Marine) (Sea-Water Aftercooled)	161E 162K	7238, 7247			224 (300)	2600	140—170 kPa (1.4—1.6 bar) (20—24 psi)
	161E 162K	7248, 7249			199 (267)	2500	130—160 kPa (1.3—1.6 bar) (19—23 psi)
	161E 162K	7250, 7251			176 (236)	2400	98—120 kPa (1.0—1.2 bar) (14—17 psi)
	161E 162K	7252, 7253			155 (208)	2300	82—100 kPa (0.8—1.0 bar) (12—15 psi)
	161E 162K	7254, 7255			136 (180)	2200	68—82 kPa (0.7—0.8 bar) (10—12 psi)
6068HF120 (Non—Certified)	16GT		RE503051		155 (208)	1500	129—157 kPa (1.3—1.6 bar) (19—23 psi)
	16LY		RE503834	RE503836	155 (208)	1500	129—157 kPa (1.3—1.6 bar) (19—23 psi)
			RE503836		155 (208)	1500	129—157 kPa (1.3—1.6 bar) (19—23 psi)

Continued on next page

TURBO BOOST PRESSURES (JOHN DEERE OEM/OUTSIDE EQUIPMENT MANUFACTURERS)							
Engine Model (Emission Certification)	**Fuel System Option Code**	**Electronic Software Code**	**Injection Pump Part No.**	**Replacement Injection Pump**	**Rated Power at Full Load Rated Speed kW (hp)**	**Full Load Rated Speed rpm**	**Turbo Boost Pressure at Full Load Rated Speed kPa (bar) (psi)**
	16RL		RE506085		197 (264)	2100	150—184 kPa (1.5—1.8 bar) (22—27 psi)
	16SJ		RE506627		197 (264)	2100	150—184 kPa (1.5—1.8 bar) (22—27 psi)
	16TP		RE506883		183 (245)	1500	130—158 kPa (1.3—1.6 bar) (19—23 psi)
	16TQ		RE506884		183 (245)	1500	156—190 kPa (1.6—1.9 bar) (23—28 psi)
	16ZQ		RE509288		197 (264)	2100	150—184 kPa (1.5—1.8 bar) (22—27 psi)
	16ZR		RE509289		197 (264)	2100	150—184 kPa (1.5—1.8 bar) (22—27 psi)
6068HF150 (Tier 1)	1621		RE66575	RE505930	157 (210)	2400	108—132 kPa (1.1—1.3 bar) (16—19 psi)
	1621		RE505930		157 (210)	2400	108—132 kPa (1.1—1.3 bar) (16—19 psi)
	160D		RE69589	RE505962	157 (210)	2400	108—132 kPa (1.1—1.3 bar) (16—19 psi)
	160D		RE505962		157 (210)	2400	108—132 kPa (1.1—1.3 bar) (16—19 psi)
	16CY		RE501345		143 (192)	2200	94—116 kPa (0.9—1.2 bar) (14—17 psi)
	16ML		RE503746		187 (251)	1800	153—167 kPa (1.5—1.7 bar) (22—24 psi)
	16MM		RE504702	RE505049	187 (251)	1800	153—167 kPa (1.5—1.7 bar) (22—24 psi)
	16MM		RE505049		187 (251)	1800	153—167 kPa (1.5—1.7 bar) (22—24 psi)
	16TM		RE506885		187 (251)	1800	144—176 kPa (1.4—1.8 bar) (21—25 psi)
	16TN		RE506886		187 (251)	1800	144—176 kPa (1.4—1.8 bar) (21—25 psi)
6068HF157 (Tier 1)	16GT		RE503051		155 (208)	1500	138—152 kPa (1.4—1.5 bar) (20—22 psi)
	16LY		RE503836		155 (208)	1500	138—152 kPa (1.4—1.5 bar) (20—22 psi)
6068HF158 (Tier 1)	16GT		RE503051		155 (208)	1500	138—152 kPa (1.4—1.5 bar) (20—22 psi)
	16LY		RE503836		155 (208)	1500	138—152 kPa (1.4—1.5 bar) (20—22 psi)

Continued on next page

TURBO BOOST PRESSURES (JOHN DEERE OEM/OUTSIDE EQUIPMENT MANUFACTURERS)							
Engine Model (Emission Certification)	**Fuel System Option Code**	**Electronic Software Code**	**Injection Pump Part No.**	**Replacement Injection Pump**	**Rated Power at Full Load Rated Speed kW (hp)**	**Full Load Rated Speed rpm**	**Turbo Boost Pressure at Full Load Rated Speed kPa (bar) (psi)**
	16ML		RE503746		187 (251)	1800	153—167 kPa (1.5—1.7 bar) (22—24 psi)
	16MM		RE504702	RE505049	187 (251)	1800	153—167 kPa (1.5—1.7 bar) (22—24 psi)
	16MM		RE505049		187 (251)	1800	153—167 kPa (1.5—1.7 bar) (22—24 psi)
6068HF250 (Tier 1)	1622		RE59521		168 (225)	2400	117—143 kPa (1.2—1.4 bar) (17—21 psi)
	1623		RE66761		148 (198)	1800	100—122 kPa (1.0—1.2 bar) (15—18 psi)
	16TV		RE506398		168 (225)	2400	117—143 kPa (1.2—1.4 bar) (17—21 psi)
6068HF252 (Tier 1)	169A		RE522694		225 (302)	3000	167—204 kPa (1.7—2.0 bar) (24—30 psi)
	168Z		RE522415		225 (302)	3000	167—204 kPa (1.7—2.0 bar) (24—30 psi)
6068HF258 (Tier 1)	16TM (12V)		RE506885		210 (282)	1800	175—214 kPa (1.7—2.1 bar) (25—31 psi)
	16TN (24V)		RE506886		210 (282)	1800	175—214 kPa (1.7—2.1 bar) (25—31 psi)
	16TP (12V)		RE506883		183 (245)	1500	153—187 kPa (1.5—1.9 bar) (22—27 psi)
	16TQ (24V)		RE506884		183 (245)	1500	153—187 kPa (1.5—1.9 bar) (22—27 psi)
6068HF275 (Tier 2)	16YS (12V)	7201, 7222, 7230	RE506680		168 (225)	2400	122—148 kPa (1.2—1.5 bar) (18—21 psi)
	16YT (24V)	7202, 7223, 7231	RE506681	RE522826	168 (225)	2400	122—148 kPa (1.2—1.5 bar) (18—21 psi)
			RE522826		168 (225)	2400	122—148 kPa (1.2—1.5 bar) (18—21 psi)
	16YS (12V)	7203, 7224, 7232	RE506680		149 (200)	2400	110—134 kPa (1.1—1.3 bar) (16—19 psi)
	16YT (24V)	7204, 7225, 7233	RE506681	RE522826	149 (200)	2400	110—134 kPa (1.1—1.3 bar) (16—19 psi)
			RE522826		149 (200)	2400	110—134 kPa (1.1—1.3 bar) (16—19 psi)

Continued on next page

TURBO BOOST PRESSURES (JOHN DEERE OEM/OUTSIDE EQUIPMENT MANUFACTURERS)							
Engine Model (Emission Certification)	**Fuel System Option Code**	**Electronic Software Code**	**Injection Pump Part No.**	**Replacement Injection Pump**	**Rated Power at Full Load Rated Speed kW (hp)**	**Full Load Rated Speed rpm**	**Turbo Boost Pressure at Full Load Rated Speed kPa (bar) (psi)**
	16YS (12V)	7205, 7226, 7234	RE506680		138 (185)	2400	95—117 kPa (1.0—1.2 bar) (14—17 psi)
	16YT (24V)	7206, 7227, 7235	RE506681	RE522826	138 (185)	2400	95—117 kPa (1.0—1.2 bar) (14—17 psi)
			RE522826		138 (185)	2400	95—117 kPa (1.0—1.2 bar) (14—17 psi)
	16YS (12V)	7207, 7228, 7236	RE506680		149 (200)	2200	113—139 kPa (1.1—1.4 bar) (16—20 psi)
	16YT (24V)	7208, 7297, 7237	RE506681	RE522826	149 (200)	2200	113—139 kPa (1.1—1.4 bar) (16—20 psi)
			RE522826		149 (200)	2200	113—139 kPa (1.1—1.4 bar) (16—20 psi)
	16YS (12V)	7274	RE506680		187 (250)	2400	126—154 kPa (1.3—1.5 bar) (18—22 psi)
	16YT (24V)	7275	RE506681	RE522826	187 (250)	2400	126—154 kPa (1.3—1.5 bar) (18—22 psi)
			RE522826		187 (250)	2400	126—154 kPa (1.3—1.5 bar) (18—22 psi)
	16YS (12V)	7276	RE508732	RE518165	168 (225)	2200	129—157 kPa (1.3—1.6 bar) (19—23 psi)
			RE518165		168 (225)	2200	129—157 kPa (1.3—1.6 bar) (19—23 psi)
	16YT (24V)	7277	RE508732	RE518165	168 (225)	2200	127—157 kPa (1.3—1.6 bar) (18—23 psi)
			RE518165		168 (225)	2200	127—157 kPa (1.3—1.6 bar) (18—23 psi)
	16YS (12V)	7278	RE508732	RE518165	157 (210)	2000	124—151 kPa (1.2—1.5 bar) (18—22 psi)
			RE518165		157 (210)	2000	124—151 kPa (1.2—1.5 bar) (18—22 psi)
	16YT (24V)	7279	RE508732	RE518165	157 (210)	2000	124—151 kPa (1.2—1.5 bar) (18—22 psi)
			RE518165		157 (210)	2000	124—151 kPa (1.2—1.5 bar) (18—22 psi)

Continued on next page

TURBO BOOST PRESSURES (JOHN DEERE OEM/OUTSIDE EQUIPMENT MANUFACTURERS)							
Engine Model (Emission Certification)	**Fuel System Option Code**	**Electronic Software Code**	**Injection Pump Part No.**	**Replacement Injection Pump**	**Rated Power at Full Load Rated Speed kW (hp)**	**Full Load Rated Speed rpm**	**Turbo Boost Pressure at Full Load Rated Speed kPa (bar) (psi)**
	161N, 163E (12V)	7280	RE508732	RE518165	129 (173)	2000	99—121 kPa (1.0—1.2 bar) (14—18 psi)
			RE518165		129 (173)	2000	99—121 kPa (1.0—1.2 bar) (14—18 psi)
	161Q, 163J (24V)	7281	RE508732	RE518165	129 (173)	2000	99—121 kPa (1.0—1.2 bar) (14—18 psi)
			RE518165		129 (173)	2000	99—121 kPa (1.0—1.2 bar) (14—18 psi)
	161N, 163E (12V)	7282	RE508732	RE518165	164 (220)	1800	115—141 kPa (1.2—1.4 bar) (17—21 psi)
			RE518165		164 (220)	1800	115—141 kPa (1.2—1.4 bar) (17—21 psi)
	161Q, 163J (24V)	7283	RE508732	RE518165	164 (220)	1800	115—141 kPa (1.2—1.4 bar) (17—21 psi)
			RE518165		164 (220)	1800	115—141 kPa (1.2—1.4 bar) (17—21 psi)
	16YS (12V)	7284	RE506680		187 (250)	1800	126—154 kPa (1.3—1.5 bar) (18—22 psi)
	16YT (24V)	7285	RE506681	RE522826	187 (250)	1800	126—154 kPa (1.3—1.5 bar) (18—22 psi)
			RE522826		187 (250)	1800	126—154 kPa (1.3—1.5 bar) (18—22 psi)
	16YS, 162B (12V)	7286	RE508732	RE518165	210 (282)	1800	147—180 kPa (1.5—1.8 bar) (21—26 psi)
			RE518165		210 (282)	1800	147—180 kPa (1.5—1.8 bar) (21—26 psi)
	16YT, 162C (24V)	7287	RE508732	RE518165	210 (282)	1800	147—180 kPa (1.5—1.8 bar) (21—26 psi)
			RE518165		210 (282)	1800	147—180 kPa (1.5—1.8 bar) (21—26 psi)
6068HF475 (4-Valve) (Tier 2)	161U (12V)	72AP			205 (275)	2400	138—152 kPa (1.4—1.5 bar) (20—22 psi)
	165B (24V)	72CQ			205 (275)	2400	138—152 kPa (1.4—1.5 bar) (20—22 psi)

06
210
61

Continued on next page

TURBO BOOST PRESSURES (JOHN DEERE OEM/OUTSIDE EQUIPMENT MANUFACTURERS)							
Engine Model (Emission Certification)	**Fuel System Option Code**	**Electronic Software Code**	**Injection Pump Part No.**	**Replacement Injection Pump**	**Rated Power at Full Load Rated Speed kW (hp)**	**Full Load Rated Speed rpm**	**Turbo Boost Pressure at Full Load Rated Speed kPa (bar) (psi)**
	161U (12V)	72AQ			187 (250)	2200	120—145 kPa (1.2—1.5 bar) (17—21 psi)
	165B (24V)	72CR			187 (250)	2200	120—145 kPa (1.2—1.5 bar) (17—21 psi)
	161U (12V)	72AR			234 (314)	1800	184—225 kPa (1.8—2.3 bar) (27—33 psi)
	165B (24V)	72CS			234 (314)	1800	184—225 kPa (1.8—2.3 bar) (27—33 psi)
	161U (12V)	72AS			207 (278)	1500	173—212 kPa (1.7—2.1 bar) (25—31 psi)
	165B (24V)	72CT			207 (278)	1500	173—212 kPa (1.7—2.1 bar) (25—31 psi)
6068HF485 (4-Valve) (Tier 3)	167W (12V)	72JJ			134 (180)	2200	
	167W (24V)	72JK			134 (180)	2200	
	167W (12V)	72JC			138 (185)	2400	
	167W (24V)	72JD			138 (185)	2400	
	167W (12V)	72JE			138 (185)	2200	
	167W (24V)	72JF			138 (185)	2200	
	167W (12V)	72JG			138 (185)	2200	
	167W (24V)	72JH			138 (185)	2200	
	167W (12V)	72HY			144 (193)	2000	
	167 (24V)	72HZ			144 (193)	2000	
	167W (12V)	72JA			144 (193)	2000	
	167W (24V)	72JB			144 (193)	2000	
	167W (12V)	72HS			149 (200)	2400	
	167W (24V)	72HT			149 (200)	2400	

Continued on next page

TURBO BOOST PRESSURES (JOHN DEERE OEM/OUTSIDE EQUIPMENT MANUFACTURERS)							
Engine Model (Emission Certification)	**Fuel System Option Code**	**Electronic Software Code**	**Injection Pump Part No.**	**Replacement Injection Pump**	**Rated Power at Full Load Rated Speed kW (hp)**	**Full Load Rated Speed rpm**	**Turbo Boost Pressure at Full Load Rated Speed kPa (bar) (psi)**
	167W (12V)	72HU			149 (200)	2200	
	167W (24V)	72HV			149 (200)	2200	
	167W (12V)	72HW			149 (200)	2200	
	167W (24V)	72HX			144 (193)	2200	
	167W (12V)	72HN			162 (217)	2000	
	167W (24V)	72HP			162 (217)	2000	
	167W (12V)	72HQ			162 (217)	2000	
	167W (24V)	72HR			162 (217)	2000	
	167W (12V)	72HG			168 (225)	2400	
	167W (24V)	72HH			168 (225)	2400	
	167W (12V)	72HJ			168 (225)	2200	
	167W (24V)	72HK			168 (225)	2200	
	167W (12V)	72HL			168 (225)	2200	
	167W (24V)	72HM			168 (225)	2200	
	167W (12V)	72HE			181 (243)	2000	
	167W (24V)	72HF			181 (243)	2000	
	167W (12V)	72HA			187 (250)	2400	
	167W (24V)	72HB			187 (250)	2400	
	167W (12V)	72HC			187 (250)	2200	
	167W (24V)	72HD			187 (250)	2200	

Continued on next page

TURBO BOOST PRESSURES (JOHN DEERE OEM/OUTSIDE EQUIPMENT MANUFACTURERS)							
Engine Model (Emission Certification)	**Fuel System Option Code**	**Electronic Software Code**	**Injection Pump Part No.**	**Replacement Injection Pump**	**Rated Power at Full Load Rated Speed kW (hp)**	**Full Load Rated Speed rpm**	**Turbo Boost Pressure at Full Load Rated Speed kPa (bar) (psi)**
	167W (24V)	72GY			205 (275)	2400	
	167W (24V)	72GZ			205 (275)	2400	
	167W (12V)	72JN			175 (235)	1800	
	167W (24V)	72JP			175 (235)	1800	
	167W (12V)	72JL			234 (314)	1800	
	167W (24V)	72JM			234 (314)	1800	

OUO1082,00002AA –19–01JUL04–31/31

Effects of Altitude and Temperature on Engine Performance

Altitude, fuel temperature, air temperature, and humidity may affect engine performance. As a general rule, atmospheric changes will usually cause a decrease in engine power by the percentages shown in chart below.

ATMOSPHERIC CHANGE	% POWER DECREASE
Fuel Temperature Rise of 1°C (1.8°F) above 40°C (104°F)	
Naturally Aspirated Engines	0.17
Turbocharged Engines:	0.19
Air Temperature Rise of 5.5°C (10°F) above 25°C (77°F)	
Naturally Aspirated Engines	1.50
Turbocharged Engines:	0.50
Altitude Rise of 300 m (1000 ft) above 180 m (600 ft)	
Naturally Aspirated Engines	3.00
Turbocharged Engines:	4.00
Relative Humidity Rise of 10% above 0%	
Naturally Aspirated Engines	0.10
Turbocharged Engines:	0.07

NOTE: This data does not apply to engines with electronic fuel control systems. In these engines, the ECU compensates for changes in altitude and temperature and adjusts engine performance.

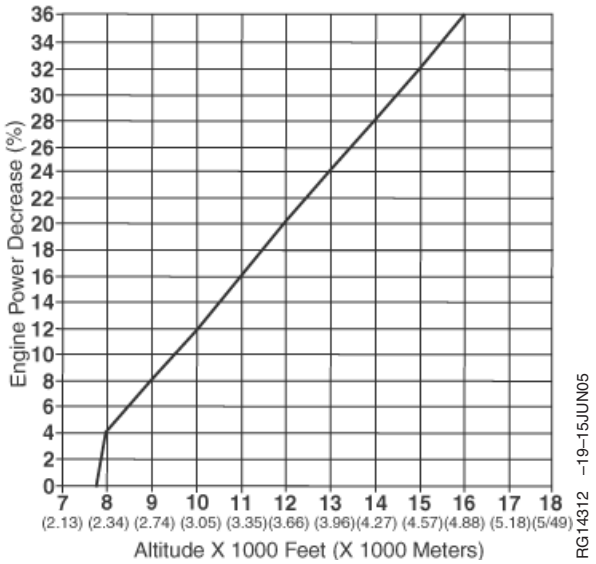

Altitude vrs. Power on Turbocharged Engines

RG,RG34710,1064 –19–08JUN99–1/1

06
210
65

Index

Page

A

Acceptable oil consumption, guideline for . . .04-150-2
Aftercooler, remove and install 02-080-29
Air cleaner operation 03-120-19
Air filter restriction indicator test 04-150-36
Air heater, remove and install 02-080-38
Air intake and exhaust system
  Theory of operation 03-120-16
Air intake pipe, remove and install 02-080-34
Air intake system
  Check 04-150-29
Alternator 02-100-2
Altitude, effects on engine performance . . .06-210-65
Auxiliary drive 02-050-10

B

Balancer shafts
  Bushing ID, measure 02-030-38
  Bushings and journals, measure 02-050-23
  Bushings, remove and install 02-050-24
  End play, measure 02-050-11
  Gears and thrust plates, inspect 02-050-25
  Gears, remove and install 02-050-26
  Install and time 02-050-38
  Remove 02-050-22
Belt tensioner
  Check spring tension 02-070-21
  Manual tensioner, adjust
    Using belt tension gauge 02-070-23
    Using belt tension tool 02-070-24
  Remove and install 02-070-19
Blow-by, check 04-150-19
Break-in engine oil 01-002-5
Break-in, engine
  Guidelines 02-010-17
  Perform break-in 02-010-18
Bridges, valve (four-valve head)
  Inspect and measure 02-021-16

C

Camshaft
  Bushing bores, measure 02-030-36
  Bushing, remove and install 02-050-6
  End play, measure 02-050-11
  Followers and bores, measure 02-030-36
  Followers, inspect 02-050-20
  Gear, remove and install 02-050-19
  Inspect 02-050-17
  Inspect and measure 02-050-18
  Install 02-050-43
  Lobe height, measure 02-050-19
  Remove 02-050-14
  Thrust plate clearance, measure 02-050-17
Camshaft followers (four-valve head)
  Inspect, measure and assemble 02-021-20
Camshaft followers (two-valve head)
  Inspect, measure and assemble 02-020-17
Carrier assembly (four-valve head)
  Install 02-021-52
Closed crankcase ventilation system 02-020-49, 02-021-56, 02-060-1
Cold start advance switch, remove and install 02-070-38
Compression test, engine 04-150-11
Connecting rods
  Bearings, inspect and measure 02-030-21
  Center-to-center bores, measure 02-030-31
  Disassemble 02-030-9
  General information 02-030-1
  Pin bore, clean and inspect 02-030-28
  Piston pin bushing, install 02-030-29
  Pistons and rods, assemble 02-030-49
  Pistons and rods, install 02-030-51
  Preliminary checks 02-030-8
  Remove 02-030-2
  Rod and cap, inspect 02-030-23
  Torque-turn cap screws 02-030-55
Coolant
  Additional information 01-002-13
  Diesel engine 01-002-11
  Disposal 01-002-17
  Supplemental additives 01-002-15
  Testing 01-002-14
Coolant heater 02-070-37
Coolant in oil or oil in coolant 04-150-10
Coolant manifold
  Remove and install (four-valve head) 02-070-8
Coolant manifold (dual thermostats) 02-070-7
Coolant manifold/thermostat cover
  Install 02-070-2
  Remove 02-070-1
  Remove and install (high flow single thermostat) 02-070-4
Coolant pump
  Assemble 02-070-15
  Clean and inspect 02-070-14
  Disassemble 02-070-13
  Exploded view 02-070-12
  Install 02-070-17
  Remove 02-070-11

Page

Coolant temperature above normal. 04-150-9
Coolant temperature below normal 04-150-10
Cooling system
  Check 04-150-27
  Deaeration 02-070-19
  Diagnostics
    Coolant in oil or oil in coolant 04-150-10
    Engine coolant temperature above normal 04-150-9
    Engine coolant temperature below normal 04-150-10
  Flush and service 01-002-16
  Pressure test. 04-150-22
  Theory 03-120-10
COOLSCAN and OILSCAN 01-002-9
Crankcase pressure, check 04-150-19
Cranking speed test 04-150-14
Crankshaft
  End play, check 02-040-19
  Failure analysis. 02-040-1
  Flange, clean and inspect 02-040-32
  Gear, remove and install. 02-040-43
  Grinding guidelines 02-040-49
  Grinding specifications 02-040-50
  Inspect 02-040-46
  Install 02-040-54
  Journals, measure 02-040-47
  Main and thrust bearing inserts, install. 02-040-52
  Main bearing caps, measure. 02-040-51
  Main bearing ID, measure. 02-040-47
  Main bearings, check clearance 02-040-42
  Main bearings, remove 02-040-40
  Pulley, install. 02-040-6
  Pulley, remove 02-040-3
  Rear seal and sleeve, handling. 02-040-27
  Rear seal and sleeve, install 02-040-32
  Rear seal and sleeve, remove 02-040-27
  Remove and install timing wheel. 02-040-39
  Remove crankshaft 02-040-45
  Replace front seal and wear sleeve 02-040-9
  Thrust journal and bearing, measure. . . .02-040-48
Cylinder block
  Bores, measure. 02-030-39
  Complete disassembly 02-030-7
  Inspect and clean 02-030-32
  Main bearing bore, measure 02-030-35
  Top deck, measure flatness 02-030-41
Cylinder block (four-valve head)
  Top deck, clean and inspect 02-021-45
Cylinder block (two-valve head)
  Top deck, clean and inspect 02-020-41

Page

Cylinder head
  Check for head gasket failures 04-150-24
  Gasket construction and diagnostics 03-120-14
Cylinder head (four-valve head)
  Cap screws, torque-turn 02-021-50
  Check flatness 02-021-30
  Final assembly 02-021-58
  Gasket, inspect and repair 02-021-28
  Inspect and clean 02-021-30
  Install 02-021-47
  Preliminary checks 02-021-23
  Remove 02-021-7
  Thickness, measure 02-021-31
Cylinder head (two-valve head)
  Cap screws, clean and inspect 02-020-40, 02-021-44
  Cap screws, torque-turn 02-020-46
  Check flatness 02-020-28
  Final assembly 02-020-53
  Gasket, inspect and repair 02-020-25
  Inspect and clean 02-020-27
  Install 02-020-43
  Preliminary checks 02-020-20
  Remove 02-020-7
  Thickness, measure 02-020-29
Cylinder liners
  Clean 02-030-12
  Deglaze 02-030-20
  Flange counterbore depth 02-030-40
  Flange thickness, measure 02-030-40
  Inspect 02-030-13
  Install 02-030-47
  Install packing and O-rings 02-030-45
  Measure 02-030-39
  O-ring bore, clean. 02-030-35
  Preliminary checks 02-030-8
  Remove 02-030-5
  Standout (height above block). 02-030-44
Cylinder liners (four-valve head)
  Standout, check 02-021-46
Cylinder liners (two-valve head)
  Standout, check 02-020-42

D

Damper, vibration
  Inspect 02-040-2
  Install 02-040-6
  Remove 02-040-3
Dealer fabricated tools 05-190-1

Page

Diagnostics
Coolant system malfunctions
Coolant in oil or oil in coolant 04-150-10
Engine coolant temperature above normal 04-150-9
Engine coolant temperature below normal 04-150-10
Lubrication system malfunctions
Engine oil pressure high 04-150-8
Engine oil pressure low 04-150-6
Execessive oil consumption 04-150-2
Diesel engine oil 01-002-8
Diesel engine oil—Non-certified and Tier 1 certified 01-002-6
Diesel engine oil—Tier 2 01-002-7
Diesel fuel 01-002-1, 01-002-2, 01-002-3
Dynamometer test 04-150-15

E

Engine
Application charts 01-001-5
Assembly sequence 02-010-13
Break-in guidelines 02-010-17
Break-in, perform 02-010-18
Check for excessive tightness 02-030-56
Cleaning 02-010-5
Compression pressure test 04-150-11
Cooling system theory 03-120-10
Crankcase pressure, check 04-150-19
Disassembly sequence 02-010-8
Final assembly 02-030-60
General operation 03-120-3
Lifting procedure 02-010-4
Lubrication system theory 03-120-6
Model designation 01-001-1
Oil consumption 04-150-16
Oil pressure check 04-150-17
Overhaul guidelines 02-010-1
Repair stand 02-010-1
Repair stand adapters 02-010-3
Repair stand mounting 02-010-7
Repair stand safety 02-010-2
Sectional view 03-120-2
Serial number plate 01-001-2
Engine oil
Break-In 01-002-5
Diesel 01-002-8
Diesel—Non-certified and Tier 1 certified 01-002-6
Diesel—Tier 2 01-002-7

Page

Excessive oil consumption 04-150-2
Exhaust leak check 04-150-35
Exhaust manifold
Remove, inspect and install 02-080-28
Exhaust manifold (four-valve head)
Inspect and clean 02-021-44
Exhaust manifold (two-valve head)
Inspect and clean 02-020-40
Exhaust restriction check 04-150-33

F

Fan drive assembly
Install 02-070-33
Remove and inspect 02-070-27
Remove and install (2254 Combine) 02-070-36
Replace bearings 02-070-28
Fan drive assembly, heavy duty
Replace bearings 02-070-31
Fan, inspect and install 02-070-26
Flywheel
Face flatness, check 02-040-21
Inspect 02-040-20
Install 02-040-26
Pilot bearing bore concentricity 02-040-21
Pilot bushing, replace 02-040-24
Remove 02-040-22
Ring gear, replace 02-040-23
Flywheel housing
Install 02-040-57
Remove 02-040-38
Front oil seal and wear sleeve, replace 02-040-9
Front plate
Clean and inspect 02-050-33
Install 02-050-37
Remove 02-050-27
Fuel
Diesel 01-002-1, 01-002-2, 01-002-3
Lubricity 01-002-4
Fuel injector bores (four-valve head)
Clean 02-021-32
Fuel injector sleeves (four-valve head)
Install 02-021-33
Remove 02-021-32
Fuel injectors (four-valve head)
Install 02-021-51
Fuel supply pump push rod 02-050-21
Measure rod bore and OD 02-030-43
Fuel supply pump push rod (four-valve head)
Inspect and install 02-021-18

Page

Fuel supply pump push rod (two-valve head)
Inspect and install 02-020-15
Fuel system 02-090-1

G

Glow plug bores (four-valve head)
Clean 02-021-34
Grease
Extreme pressure and multipurpose 01-002-10

H

Head gasket failure check 04-150-24

I

Idler gear
Bushing and shaft, measure 02-050-30
Bushings, install 02-050-32
Bushings, remove 02-050-31
End play, measure 02-050-12
Lower, install. 02-050-36
Idler shaft
Remove 02-050-33
Spring pins, install. 02-050-35
Upper, install. 02-050-35
Injection nozzle bores (two-valve head)
Clean 02-020-30
Injection pump timing mark, transfer. 02-050-34
Injector bores (four-valve head)
Clean 02-021-32
Injectors, fuel (four-valve head)
Install 02-021-51
Intake air leak test 04-150-34
Intake manifold pressure
Measure 04-150-30
Intake manifold pressure (turbo boost)
specifications 06-210-23
Intake manifold pressure (turbo boost) specifications
(Continued) 06-210-34
Intake manifold pressure, measure. 04-150-30
Intake restriction check. 04-150-33

L

Lubrication system
Diagnostics
Engine oil pressure high 04-150-8
Engine oil pressure low 04-150-6
Excessive oil consumption. 04-150-2
General information. 02-060-1
Theory 03-120-6
Lubricity of diesel fuel. 01-002-4

M

Magnetic pick-up, remove and install 02-050-54
Main bearings
Caps, measure 02-040-51
Failure analysis. 02-040-1
Measure 02-040-47
Oil clearance, check 02-040-42
Remove 02-040-40
Manual belt tensioner. 02-070-23, 02-070-24

O

Oil bypass valve. 02-060-13
Oil consumption, excessive 04-150-2
Oil consumption, guideline 04-150-2
Oil cooler 02-060-7
Oil dipstick tube 02-060-21
Oil dipstick tube with fitting. 02-060-23
Oil fill adapter. 02-060-19
Oil filters. 01-002-9
Oil in coolant or coolant in oil 04-150-10
Oil pan, install 02-060-32
Oil pressure check 04-150-17
Oil pressure high 04-150-8
Oil pressure low 04-150-6
Oil pressure regulating valve
Remove and install 02-060-14
Oil pump
Assemble 02-060-29
Disassemble 02-060-28
Exploded view. 02-060-24
Inspect and measure clearances. 02-060-26
Install 02-060-30
Remove 02-060-25
Oil pump pick-up tube 02-060-24
OILSCAN and COOLSCAN 01-002-9
Other materials
Air intake and exhaust system 05-170-54
Camshaft, balancer shaft and timing gear
train. 05-170-42
Cooling system 05-170-53
Crankshaft, main bearings and
flywheel 05-170-34

Page

Cylinder block, liners, pistons and rods 05-170-26
Cylinder head and valves (four-valve head) 05-170-20
Cylinder head and valves (two-valve head) 05-170-11
Engine rebuild 05-170-3
Lubrication system 05-170-49

P

Pilot bearing bore concentricity 02-040-21
Piston cooling orifices 02-030-42
Piston-to-liner clearance, measure 02-030-18
Pistons
Check ring groove wear 02-030-15
Clean 02-030-10
Disassemble 02-030-9
Inspect 02-030-11
Measure height 02-030-17
Pins and bushings, inspect 02-030-25
Piston pin bore, measure 02-030-16
Piston pin bushings, remove 02-030-26
Piston-to-liner clearance, measure 02-030-18
Pistons and rods, assemble 02-030-49
Pistons and rods, install 02-030-51
Preliminary checks 02-030-8
Protrusion, measure 02-030-57
Remove 02-030-2
Ring grooves, check wear 02-030-15
Rings, install 02-030-50
Skirt, measure 02-030-17
Pistons and liner sets, replace 02-030-20
Pump, coolant
Assemble 02-070-15
Pump, Coolant
Clean and inspect 02-070-14
Disassemble 02-070-13
Exploded view 02-070-12
Install 02-070-17
Remove 02-070-11

R

Radiator cap, pressure test 04-150-22
Rear seal and sleeve
Install 02-040-32
Remove 02-040-27
Repair stand mounting safety 02-010-2

Page

Rocker arm assembly (four-valve head)
Assemble 02-021-18
Disassemble and inspect 02-021-17
Install 02-021-53
Rocker arm assembly (two-valve head)
Assemble 02-020-15
Disassemble and inspect 02-020-14
Install 02-020-47
Rocker arm cover (four-valve head)
Install 02-021-57
Rocker arm cover (two-valve head)
Install 02-020-50

S

Safety precautions, repair stand mounting 02-010-2
Sealant application guidelines 02-010-12
Sensor
Magnetic pick-up, remove and install . . . 02-050-54
Serial number plate 01-001-2
Specifications
Air intake and exhaust system 06-200-37
Camshaft, balancer shafts and timing gear train 06-200-24
Cooling system 06-200-33
Crankshaft, main bearings and flywheel 06-200-21
Cylinder block, pistons and rods 06-200-14
Cylinder head and valves (four-valve head) 06-200-10
Cylinder head and valves (two-valve head) 06-200-6
Diagnostic, engine 06-210-1
Dynamometer 06-210-1
Engine rebuild 06-200-5
General OEM engine specifications 06-200-3
Lubrication system 06-200-30
Starting and charging systems 06-200-38
Turbocharger boost pressure 06-210-23
Turbocharger boost pressure (Continued) 06-210-34
Start aid, remove and install 02-080-39
Starting and charging system, specifications 06-200-38
Starting motor 02-100-1

T

Temperature, effects on engine performance 06-210-65

Page

Thermostat (four-valve head)
Remove and install 02-070-8
Thermostat (single)
Install 02-070-2
Remove 02-070-1
Remove and install (high flow single thermostat) 02-070-4
Thermostats
Opening temperature test 04-150-21
Thermostats (dual), remove and install. 02-070-7
Timing gear backlash, measure 02-050-13
Timing gear cover
Clean and inspect. 02-050-49
Install 02-050-50
Remove 02-050-3
Timing mark, transfer 02-050-34
Timing wheel, remove and install 02-040-39
Timing, injection pump gear 02-050-43
Tools
Camshaft, balancer shaft and timing gear train. 05-170-35
Cooling system 05-170-50
Crankshaft, main bearings and flywheel 05-170-27
Cylinder block, liners, pistons and rods. 05-170-20
Cylinder head and valves (four-valve head). 05-170-12
Cylinder head and valves (two-valve head). 05-170-3
Dealer fabricated. 05-190-1
Diagnostic. 05-180-1
Engine rebuild. 05-170-1
Lubrication system 05-170-43
Starting and charging systems 05-170-55
Turbo boost
Measure 04-150-30
Turbocharger
Adjust wastegate actuator. 02-080-16
Axial bearing end play test 02-080-13
Boost pressure specifications 06-210-23
Boost pressure specifications (Continued) 06-210-34
Boost pressure, measure 04-150-30
Break-in 02-080-27
Extending life 02-080-1
Failure analysis. 02-080-5
Inspection 02-080-7
Install 02-080-23
Lubrication 03-120-21
Oil inlet line. 02-010-6
Oil seal leak test 04-150-20
Prelube 02-080-22

Page

Radial bearing clearance test 02-080-14
Recommendations for use 02-080-27
Remove 02-080-3
Repair. 02-080-21
Theory of operation. 03-120-20
Wastegate test 04-150-36

V

Valve (four-valve head)
Bridges, inspect and measure. 02-021-16
Valve seats (four-valve head)
Grind. 02-021-37
Valve seats (two-valve head)
Grind. 02-020-33
Valves
Lift, measure. 02-050-1
Valves (four-valve head)
Clean 02-021-25
Clearance, check and adjust. 02-021-1
Grind. 02-021-27
Guides, clean 02-021-34
Guides, knurl. 02-021-36
Guides, measure. 02-021-35
Inspect and measure 02-021-26
Install 02-021-43
Lift, measure. 02-021-5
Preliminary checks 02-021-23
Recess, measure 02-021-22
Remove 02-021-24
Seat bore, measure 02-021-41
Seat inserts, install 02-021-42
Seat inserts, remove. 02-021-37
Seats, clean and inspect. 02-021-36
Springs, inspect and measure. 02-021-25
Valves (two-valve head)
Clean 02-020-22
Clearance, check and adjust. 02-020-2
Grind. 02-020-24
Guides, clean 02-020-30
Guides, knurl. 02-020-32
Guides, measure. 02-020-31
Inspect and measure 02-020-23
Install 02-020-39
Lift, measure. 02-020-5
Preliminary checks 02-020-20
Recess, measure 02-020-19
Remove 02-020-21
Rotators, inspect. 02-020-22
Seat bore, measure 02-020-38
Seat inserts, install 02-020-39

Page

Seat inserts, remove 02-020-35
Seats, clean and inspect 02-020-32
Springs, inspect and measure 02-020-21
Ventilator outlet hose (four-valve head)
Inspect and clean 02-021-55
Ventilator outlet hose (two-valve head)
Inspect and clean 02-020-48
Vibration damper
Inspect 02-040-2
Install 02-040-6
Remove 02-040-3

W

Warm temperature operation 01-002-15