RCD-GRSNA

RoboCylinder 2-Finger Gripper Vertical Mini Slider Type
22 mm Width BLDC Motor

■ Model Description

RCD – **GRSNA** – **I** – **3** – **2** – **4** – **D3** – ☐

Series	Type	Encoder	Motor	Lead	Stroke	Compatible Controllers	Cable Length
		I: Incremental	3: 2.5 W BLDC motor	2 : 2 mm	4 : 4 mm (2 mm per side)	D3: DSEP DCON-CA	N : None P : 1 m S : 3 m M : 5 m X☐☐ : Custom R☐☐ : Robot cable

CE RoHS



POINT Notes on Selection

(1) The maximum opening/closing speed indicates the operating speed on one side. The relative operating speed is twice this value.
(2) The maximum gripping force is the sum of the gripping forces of both fingers, at a gripping point where there is no offset or overhang distance. The work part weight that can be actually moved depends on the friction coefficient between the gripper fingers and the work part, as well as on the shape of the work part. As a rough guide, a work part's weight should not exceed 1/10 to 1/20 of the gripping force. (See page 25 for details.)
(3) The maximum acceleration while moving is 1 G.

■ Gripping Force vs. Electric Current Limit

The gripping (pushing) force can be adjusted freely within the range of electric current limits of 40% to 70%.

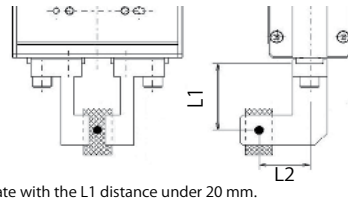

* Operate with the L1 distance under 20 mm.
* The gripping force in the graph below assumes that L1 and L2 inthe figure above are zero. (Refer to p. 26 for the rough guide ongripping force at each distance of L1.) Also note that the grippingforce is a sum of gripping forces of both fingers.

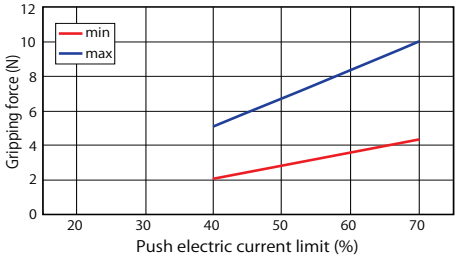

* The gripping force graph above shows the number of references.

* Please note that, when gripping (pushing), the speed is fixed at 5 mm/s.

Actuator Specifications

■ Lead and Payload

Model Number	Deceleration Ratio	Max. Gripping Force (N)	Stroke (mm)
RCD-GRSNA-I-3-2-4-D3-①	3.7	10 (5 per side)	4 (2 per side)

Legend: ① Cable length

■ Stroke and Max. Opening/Closing Speed

Stroke (mm)	Max. Speed (mm/s)
4	7 6

Cable List

Type	Cable Symbol	
Standard Type	**P** (1m)	
	S (3m)	
	M (5m)	
Special Length	**X06** (6m) ~ **X10** (10m)	
	X11 (11m) ~ **X15** (15m)	
	X16 (16m) ~ **X20** (20m)	
Robot Cable	**R01** (1m) ~ **R03** (3m)	
	R04 (4m) ~ **R05** (5m)	
	R06 (6m) ~ **R10** (10m)	
	R11 (11m) ~ **R15** (15m)	
	R16 (16m) ~ **R20** (20m)	

Actuator Specifications

Item	Description
Drive System	Lead screw + grooved cam
Positioning Repeatability	±0.05 mm
Backlash per finger	0.4 mm or less
Lost Motion	0.25 mm or less per side
Guide	Linear guide
Static Allowable Moment	Ma: 0.04N•m Mb: 0.04N•m Mc: 0.07N•m
Weight	0.085 kg
Ambient Operating Temp./Humidity	0 to 40° C, 85% RH or less (non-condensing)

Dimensions

CAD drawings can be downloaded from the website. www.intelligentactuator.com

2D CAD

*1 The maximum range in which the finger operates for home return operation, etc. Be careful not to let the finger contacts other finger belonging to the customer or any work present nearby.
*2 The finger moves to the dimensions shown in [ ] during home return, so pay attention to contact.
*3 The actuator cable is not a robot cable, so it must be secured while in use.

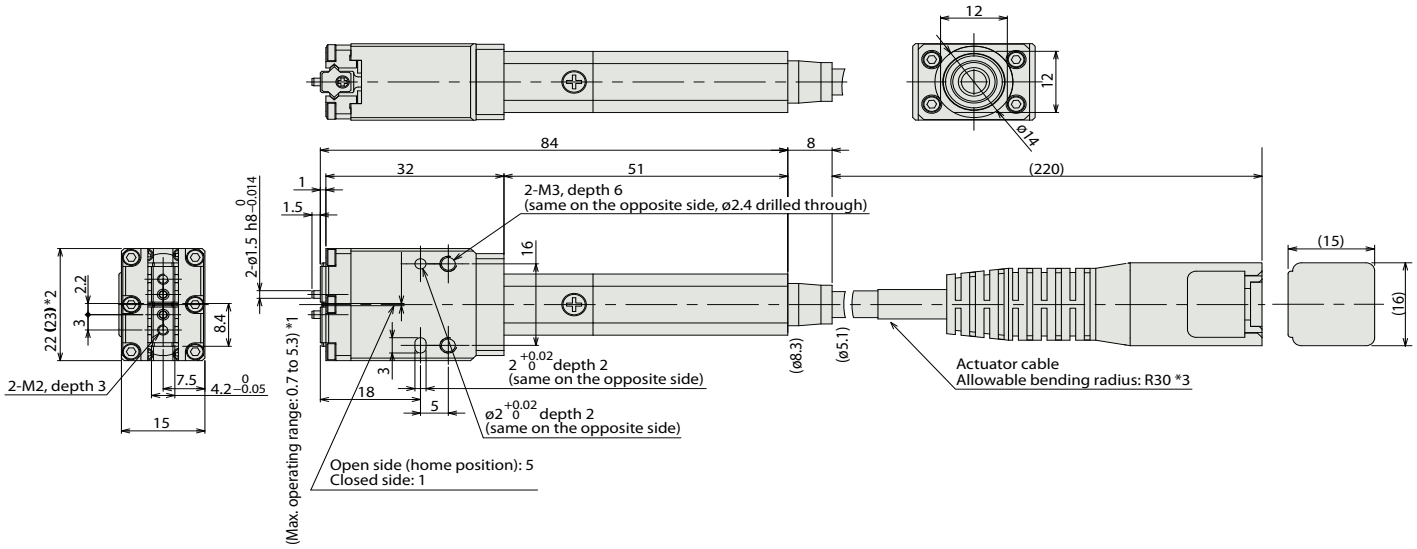

Compatible Controllers

The RCD series actuators can operate with the controllers below. Select the controller according to your usage.

Name	External View	Model Number	Description	Max. Pos. Points	Input Voltage	Power Supply Capacity		See Page
Solenoid Valve Type		DSEP-C-3I-①-2-0	Simple controller capable of operating actuators with the same signals used to operate solenoid valves, supporting both the single-solenoid method and the double-solenoid method.	3 points	DC24V	(Standard specification) Rated: 0.7A Max: 1.5A		→ P30
Dustproof Solenoid Valve Type		DSEP-CW-3I-①-2-0						
Positioner Type		DCON-CA-3I-①-2-0	PIO control ready	512 points		Rated: 0.7A Max: 1.5A		→ P30
Pulse Train Type		DCON-CA-3I-PL□-2-0	Pulse-train input ready	–				
Network Type		DCON-CA-3I-④-0-0	Field network ready	768 points				

* ① indicates I/O type (NP/PN).
* □ indicates N (NPN specification) or P (PNP specification) symbol.
* ④ indicates field network specification symbol.

Note: Take note that the simple absolute type is not available.