CARLTON

STAINLESS STEEL STEAMER



Instruction Manual

C96SSS09

Safety

When using electrical appliance, basic safety precautions should always be followed, including the following:

1. Read all instructions before using the food steamer.
2. This appliance has been designed and manufactured to meet international safety standards but, like any electrical appliance, care must be taken if you are to obtain the best results and safety is to be assured.
3. Do ensure that all electrical connections (including the mains plug, mains cable and inter-connections between the pieces of appliance) are properly made and in accordance with the manufacturer's instructions. Switch off and withdraw the mains plug before making or changing connections.
4. Do consult your dealer if you are ever in doubt about the installation, operation or safety of your appliance.
5. Do not remove any fixed cover as this may expose dangerous voltages
6. Do not obstruct the ventilation openings of the appliance with items such as newspapers, tablecloths, curtains, etc.
7. Do not allow electrical appliance to be exposed to dripping or splashing.
8. Do not place objects filled with liquids, such as vases, on the appliance.
9. Do not continue to operate the appliance if you are in any doubt about it working normally, or if it is damaged in any way - switch off, withdraw the mains plug and consult your dealer.
10. Never guess or take chances with electrical appliance of any kind - it is better to be safe than sorry!'
11. Before connecting the appliance to the mains socket, check the voltage on the label corresponds with the voltage in your home, if this is not the case, please don't use the appliance and contact your dealer.
12. Do not touch the hot surfaces. Use handles or knobs. Always use mitts when handling hot materials. Avoid hot steam rising from the top of the appliance at all times when in use. Do not touch the top of the appliance while it is generating steam. Remove lid by lifting slowly away from you. Always use the handle when moving the appliance.
13. Allow the appliance to cool completely before cleaning or storing.
14. Allow the appliance to cool before putting on or taking off parts.
15. When the appliance is not in use and before cleaning, unplug the food steamer from the mains socket.
16. To protect against the risk of electrical shock, do not immerse the appliance bottom, mains cable or mains plug in water or other liquids.
17. This appliance is not intended for use by persons (including children) with reduced physical, sensory or mental capabilities, or lack of experience and knowledge, unless they have been given supervision or instruction concerning the use of the appliance by a person responsible for their safety.

18. Children should be supervised to ensure that they do not play with the appliance.
19. Close supervision is always necessary when this or any appliance is used near children.
20. If the mains cable is damaged it must be replaced by the manufacturer, its service agent, or similarly qualified persons in order to avoid a hazard.
21. Do not use attachments not recommend by the manufacturer, they may cause fire, electrical shock or injury.
22. Use the appliance on a level and stable work surface away from water.
23. Do not use outdoors or for commercial purpose, do not use the appliance for other uses than its intended use.
24. Do not let the mains cable hang over the edge of the table or counter.
25. Do not let the mains cable touch hot surfaces.
26. Never place the appliance on or near a source of heat such as electronic burner or other toaster oven.
27. Do not operate the appliance without water, it may damage the heating element. If this happens, you should immediately unplug the appliance from the mains socket. After cooling the appliance for 15 minutes, pour cool water in the appliance.
28. Always use sufficient water for steaming time.
29. Always place the appliance on a dry, flat and stable surface.
30. During operation, please be careful of the steam coming out from the steamer lid and don't face directly to any part of the body when opening the lid.
31. Use extreme caution when moving an appliance containing hot oil or other hot liquids.
32. To disconnect, switch the appliance off, then remove the mains plug from mains socket.
33. Never steam food in the water tank.
34. Be careful of the hot steam, especially from the top lid and power base handle.
35. This appliance is for household use only.
36. Save these instructions.

Unpacking the Steamer

Remove all packaging from the steamer. Retain the packaging. If you dispose of it please do so according to any recycling regulations.



Lid X1
part number
FS1149-1

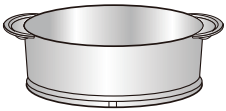

Supports X3
part number
FS1149-4



Steamer Plate X3
part number
FS1149-3



Rice Bowl X 1
part number
FS1149-5

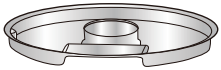

Juice Colleactor X1
part number
FS1149-6



Tube X 1
part number
FS1149-7



Instruction Maunal X 1
part number
FS1149-40

If items are missing or damaged, please contact Partmaster (UK only).
Tel: 0870 6001 338 for assistance.

Getting to know your Steamer

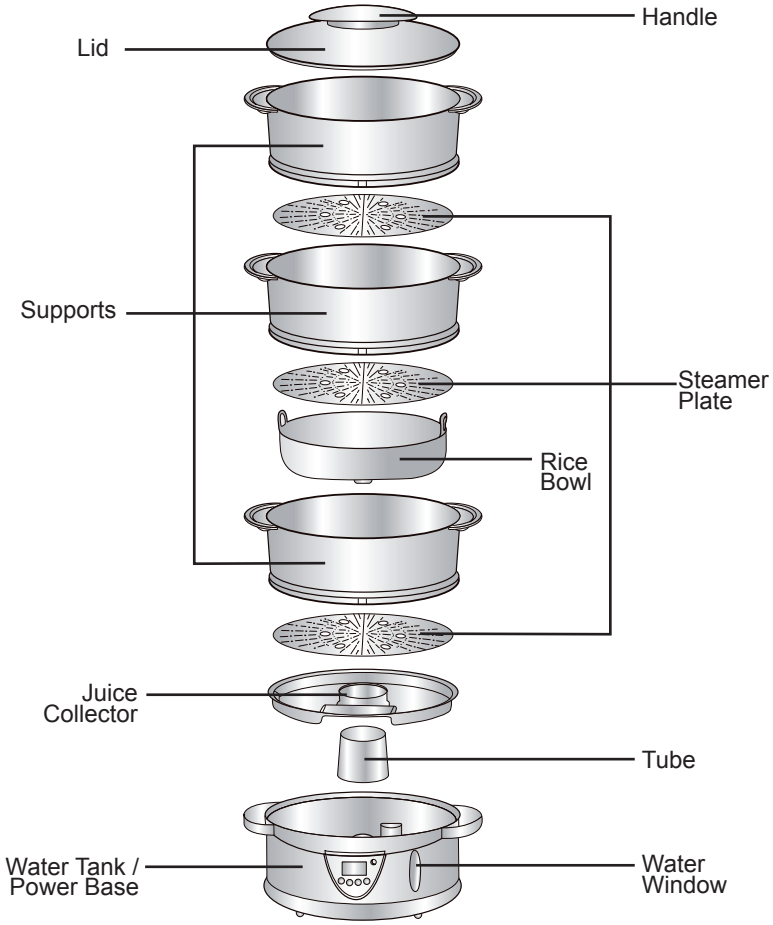

Control Panel

1. **On/Off button**:
   Press this button to start the steamer.
   Press and hold this button for 2 seconds to stop the steamer.
2. **Mode button**:
   Press this button to select your desired programme (bread, rice, fish, chicken breast, or vegetables).
3. **Adjust button**:
   Press this button to increase the steaming time (up to 59 minutes)
4. **Hr/Min button**:
   The steamer can start automatically after a set time (up to 12 hours, 59 minutes). Press this button to switch between “hour” and “minute” and then press the ***Adjust button*** to set the start time.
5. **Power indicator**:
   Displays different colours to show the steamer status:
   - steady green: standby mode
   - flashing green: automatic start time is counting down
   - red: steaming in progress
6. **Display**:
   Shows the steaming mode and time.

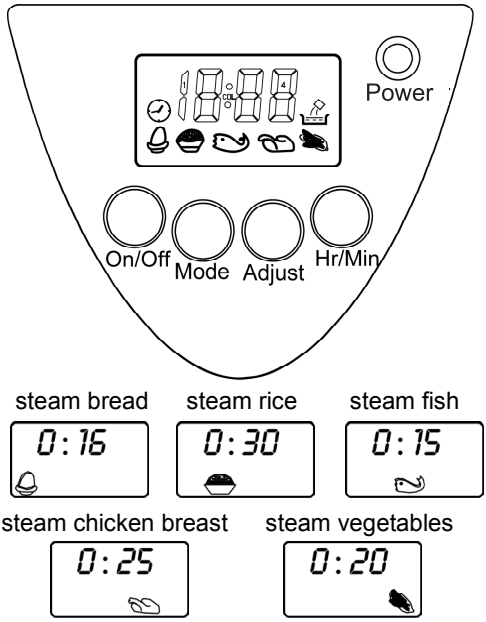

Assembling the Steamer Baskets

You assemble each steamer basket by attaching a steamer plate to a support.

1. Make sure the plate is facing upward.

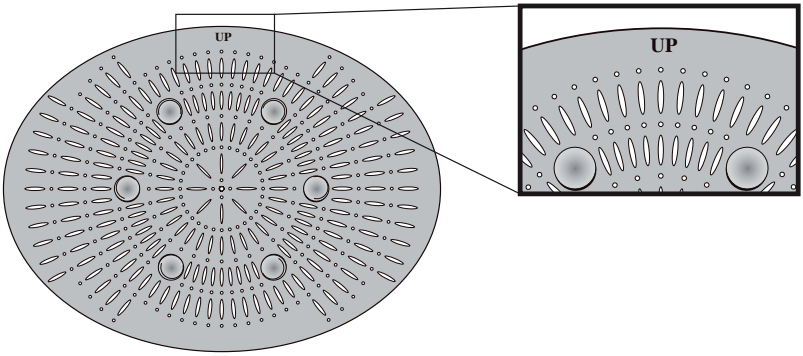

2. Insert one end of the plate into the support slot first.

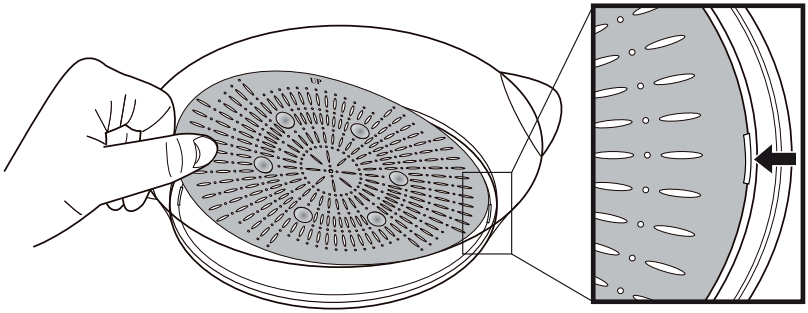

3. Use one hand to lift the other end of plate to about 2cm.

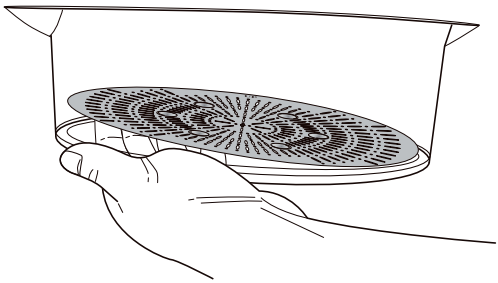

4. Use your other hand to push the end of the plate down and into the slot, then release.

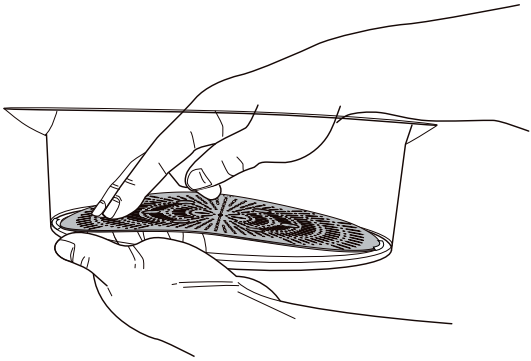

5. The steamer basket assembly is complete.

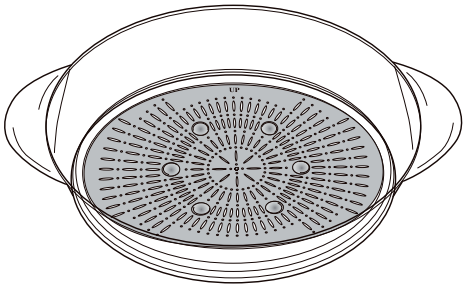

Cleaning Before First Use

1. Wash the steamer plates and supports, lid, juice collector and rice bowl in hot soapy water, rinse and dry completely.
   Note: The flow marks on the steamer plates' surface are not a defect, and they will not affect the cooking quality, cooking time, and the functionality of the plates.
2. Operate the steamer as described in ***How to Use Your Steamer*** on the next page, filling the water tank to the Max level with cold water. Place the empty baskets and lid on the power base.
3. When the water is boiling, press the **On/Off button** for 2 seconds to switch off. Allow the steamer to cool down completely and then discard the water.

How to use your Steamer

1. Place the power base on a stable surface, away from any objects which could be damaged by the steam escaping.
2. Place the tube firmly over the heating element in the water tank as per the below screenshots. Ensure the tube is snugly inserted into the ring mark in the water tank.

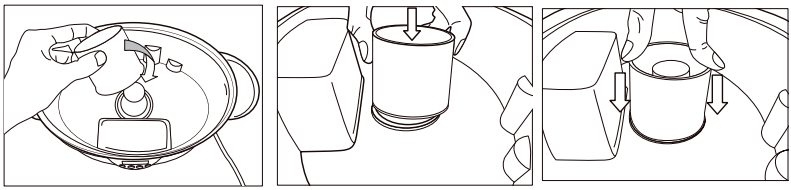

3. Fill the water tank with cold water:
   - Fill to the Max level for food requiring at least 13 minutes of steaming time.
   - Fill to the Min level for food requiring less than 13 minutes of steaming time.
4. Place the juice collector on the base and check that it is level.
   Caution: Don't add any salt, pepper, herbs, seasoning, wine, stock, or any liquid other than water to the water tank.
5. Put the food into the steamer baskets and place the baskets on the power base.
6. Cover the top basket with the lid.
7. Plug the steamer into the mains socket. The **Power indicator** will turn green.
8. Press the **Mode button** to choose a steam program: bread, rice, fish, chicken, or vegetables. The display shows the minimum steam time for each food type. To increase the steam time, press the **Adjust button**.
9. Press the **On/Off button** to start the steamer. The Power indicator will turn red.
10. When steaming finishes, the steamer will beep. Remove the baskets immediately, using oven gloves to prevent burns.
    Note: To stop the steamer during operation, press the **On/Off button** for 2 seconds.
11. Unplug the steamer from the mains socket and allow it to cool down completely.
12. Empty the water tank and refill it with fresh water before each use.
    Note: Be careful when removing the drip tray. While other parts of the steamer may have cooled down, water in the water tank and drip tray may still be very hot.



- Don't operate the steamer without the baskets and lid in place.
- While the steamer is operating, don't touch the base, lid, steamer baskets or rice bowl unless wearing oven gloves.

Boil-dry protection system

If the water level in the water tank is too low during operation, the boil-dry protection system will turn off the steamer and sound a buzzer. The display will show “E EE”. Add water to the tank and ensure the water level is between the Max and Min marks before resuming operation.



Using the Steamer Baskets and Rice Bowl

Your steamer is equipped with three steamer baskets.

Using a single basket

1. Place the food in the basket.
2. Place the basket on the power base and put the lid on.

Using multiple baskets

1. Place the food in the baskets. We recommend that you put the largest pieces of food in the lowest basket.
2. Stack the baskets on the power base and put the lid on. The baskets can be placed on the power base in any order.

Using a single basket with rice bowl

- *Place the rice and water in the rice bowl.*
- *Place the rice bowl in steamer basket.*
- *Place the basket on the power base and put the lid on.*

Notes:

- You can put different foods in the baskets, but since steam will drip from the upper layer, make sure their flavours complement each other. When steaming meat and vegetables, always place the meat in the lowest basket so that juice can’t drip onto the other food.
- If you are cooking food with different cooking times, place the food that requires the longest cooking time in the lowest basket and start cooking it first. When the timer reaches the setting for the next basket of food, remove the lid using oven gloves or a cloth, and add the basket to the stack on the power base. Replace the lid.

Using the Automatic Timer

This steamer has an automatic start timer. If you do not want the steamer to start operating immediately, you can set the automatic start timer by pressing the **Hr/Min button**.

For example, to set the steamer to turn on after 2 hours and 15 minutes:

1. Follow steps 1-7 of ***How to Use Your Steamer***.
2. Press the **Hr/Min button** once. A clock icon will appear on the left of the display and the “00” (minutes) will flash.
3. Press the **Adjust button** until the minutes display shows”15”.
4. Press the **Hr/Min button** again. The “0” (hours) will flash.
5. Press the **Adjust button** until the hours display shows”2”.
6. Press the **Hr/Min button** to confirm the setting.
7. Press the **On/Off button**. The **Power indicator** will start flashing green and the display will show the timer counting down. When the timer reaches “0:00”, the steamer will turn on.
   Note: To cancel the timer, press the **On/Off button** for 2 seconds.

Cleaning and Maintenance

- Allow the appliance to cool down completely before cleaning.
- Wash the steamer plates, support, lid, juice collector and rice bowl in hot soapy water, rinse and dry completely.
- Do not clean any part with abrasive cleaners such as metal scouring pads or scouring powder.
- Do not immerse the water tank in water. Pour warm water into the water tank, rinse thoroughly and discard the water, then dry with a soft cloth. All parts except the water tank can be cleaned in a dishwasher; however, continual cleaning in a dishwasher may result in a slight loss of polish.
- Store the steamer in a dry place. The mains cable can be wound under the bottom of the power base.

Descaling the Water Tank

After about 2-3 months' use, some chemical deposits may build up in the water tank or on the heating element, depending on the hardness of the water. It is essential to descale the water tank regularly to prolong the product life.

1. Fill the water tank to the Max mark with a mixture of white vinegar and water. Do not use any other chemical or detergent.
2. Plug the steamer into the mains socket. The steamer baskets, lid, juice collector and rice bowl are not to be used during this operation.
3. Set timer for approx.20-25 minutes and start steaming. If the vinegar mixture boils over, switch off the steamer and unplug from the mains socket.
4. When steaming finishes, unplug the steamer from the mains socket and allow it to cool down before pouring the vinegar mixture out.
5. Rinse the water tank several times.

Recipes

Type	Weight	Water required	Steaming time
Rice	Rice 330g, water 200g	1200ml	30-50 minutes
Egg	6pcs (drill a hole on the top)	1200ml	16-26 minutes
Fish	300g	1200ml	15-25 minutes
Meat	300g	1200ml	25-45minutes
Chicken	400g	1200ml	25-35 minutes
Potato	1pcs (1-inch thick)	1200ml	30-35 minutes
Carrot	250g (1-inch thick)	1200ml	20-30 minutes

Notes:

- Use the above chart as a guide only and make sure food is cooked through thoroughly before consumption.
- Steaming times in the chart are based on the use of cold water.
- Do not block the holes in the steam plates.
- The cooking times and weights indicated in the chart may vary depending on the size of the pieces of food, the space between items, the quality of the food and individual taste. Once you are familiar with the steamer, you will be able to adjust the cooking time accordingly.
- When using the appliance at high altitude, steaming time may need to be increased.
- A single basket of food steams faster than multiple baskets. Therefore, steaming time for a large quantity of food is much longer.
- Put the largest pieces of food in the lowest steamer basket.
- Do not crowd the food in a basket. There should be space between pieces to allow the steam to flow.
- Completely thaw frozen meat or poultry before steaming.

Technical Specification

Model	C96SSS09
Mains supply	230V ~ 50Hz
Power consumption	750W

We continually strive to improve our products. Specifications may change without prior notice.

NOTE: If you require a replacement for any of the items listed below, please quote their corresponding part numbers:	
Replacement Part	**Part Number**
Glass lid	FS1149-1
Supports	FS1149-4
Steamer plates	FS1149-3
Rice bowl	FS1149-5
Juice Collector	FS1149-6
Tube	FS1149-7
Instruction manual	FS1149-40

Partmaster.co.uk

Visit Partmaster.co.uk today for the easiest way
to buy electrical spares and accessories.
With over 1 million spares and accessories available
we can deliver direct to your door the very next day.
Visit www.partmaster.co.uk
or call 0870 6001 338
(UK customers only)
Calls charged at National Rate.



This symbol on the product or in the instructions means that your electrical and electronic equipment should be disposed at the end of its life separately from your household waste. There are separate collection systems for recycling in the EU.
For more information, please contact the local authority or your retailer where you purchased the product.

DSG Retail Ltd. Maylands Avenue Hemel Hempstead
Hertfordshire HP2 7TG England