HM Prison Service

sanitaryware specification







Armitage Shanks

For latest prices and delivery to your door visit MyTub Ltd - www.mytub.co.uk - info@mytub.co.uk 0844 556 1818

H.M. Prison

introduction

HM Prison Service - Product Specification.

- *Specification*
- *Materials*
- *Quality assurance*
- *British standards*

Sanitary Assemblies

Introduction

This booklet contains details of sanitary assemblies suitable for use in penal establishments and associated residential accommodation.

Specifications and Order Details

A comprehensive technical sales service and detailed specifications are provided to architects and other specifiers by Armitage Shanks to ensure the correct detailing of product.
Orders for all products must be placed through recognised builders merchants stockists.
Each assembly has Service code reference, which should be used when specifying and ordering, to ensure that total assemblies are installed. This will ensure compatibility of ware and associated fittings.

Materials and Maintenance Recommendations

The sanitary assemblies are provided with Vitreous China and fireclay ceramic products, with associated CP brass, stainless steel and plastics fittings.
The material properties and maintenance recommendations are as follows:

Vitreous China

Armitage Shanks Vitreous China is a white clay body which is vitrified and permanently fused with a vitreous glazed surface.
It is stain-proof, burn-proof, rot-proof, rustless, non-fading and resistant to acids and alkalis, in accordance with BS3402:1969.
The 99.5% vitreosity ensures that even unglazed, it cannot become contaminated by bacteria and germs and will always remain hygienic. Vitreous China is very hard wearing and is guaranteed against crazing.
Maintenance required is normally confined to surface cleaning with a mild detergent or soap solution. Dry with a soft cloth.
Stubborn grease or dirt can be easily removed with a mild liquid cleanser.
Regular daily cleaning will minimise the risk of encrustation caused by lime deposits.

Fireclay

The thickness and weight of fireclay give fixtures great strength and resistance to impact and thermal shock.
Fireclay fixtures are therefore particularly suitable for anti-vandal installations.
The vitreous ceramic glaze is guaranteed against crazing and maintenance should be carried out as for vitreous china.

Solid Surface

Solid surface is a composit material that is both resiliant to attack, hard wearing and extremely hygienic - making it ideal for use in high impact areas such as Prison Cells, Police Stations, Night clubs etc.
Clean regularly with warm soapy water dry and polish with a clean soft cloth. Surface marks can easily be polished off.

Chromium Plated Fittings

Clean regularly with a soft cloth and warm soapy water or mild detergent, rinse, dry and polish with a clean soft cloth. Do not use household cleansers containing abrasives or chemicals. Dripping taps will waste water and may cause stains - it is a simple matter to replace the seating washer. Faulty equipment should be repaired or replaced immediately.

WC Seats

Clean daily with warm soapy water (a little disinfectant may be added) rinse and dry with a soft cloth.
Do not allow WC cleansers or strong bleaches to come into contact with plastics seats. Always ensure that seat and cover are in raised position when cleaning WC bowls.

Quality Assurance

It is the declared policy of Armitage Shanks to provide customers and users with products fit for, and safe to use, for their intended purpose.
Trained personnel examine product at all stages of manufacture and final inspections are conducted to exacting standards.
WC's are flush tested to ensure their performance with cisterns fixed at the heights recommended in this catalogue.
To further the Company's control of quality, Armitage Shanks have introduced Quality Systems conforming with BS EN ISO 9002 :1994 in all their manufacturing sites and to verify compliance with the standards exacting criteria, sites are independently assessed and certified by BSI's Quality Assurance Services - a Government Accredited Certification Body.
The Company's ceramics, plastics injection moulding and tap ware manufacturing sites are already registered under BSI's Registered Firms Scheme.

Vitreous China and Fireclay

All pieces supplied, individually labelled and shrink wrapped in transparent plastic bags with identification number and/or name.

Brass Fittings

Dispatched in cartons in individual sets, these being labelled externally as to the contents.

Miscellaneous

WC seats in labelled cartons or wrappers.
Small fittings in transparent plastics bags for easy identification.
Other items such as support brackets are delivered in bundles and suitably labelled.

British Standards

The British Standards with which component parts of the assemblies comply are as follows:

BS 3402 Vitreous China - Quality
BS 5503 Water Closets
BS 1206 Sinks
BS 5412 Taps
BS 1254 WC Seats
BS 1390 Steel Baths

For latest prices and delivery to your door visit MyTub Ltd - www.mytub.co.uk - info@mytub.co.uk 0844 556 1818

H.M. Prison

safe cell

HM Prison Service - Product Specification.

- *Armitage Shanks*
- *H.M. Prison service*
- *Hygienic*



Environments are places of continual change - with Prisons being no exception. Over the years new technologies and material advances have opened up new opportunities for safe cell design. Armitage Shanks in association with the H.M. Prison service have continued to develop the very latest product to help ensure the safest, most hygienic bathrooms, washrooms and shower environments.

Product information
Tel: 0870 122 8822 Fax: 0870 122 8282
eMail: info@thebluebook.co.uk
www.thebluebook.co.uk

For latest prices and delivery to your door visit MyTub Ltd - www.mytub.co.uk - info@mytub.co.uk 0844 556 1818

selection index

H.O. Code	Description	Use	
WCA	Sentry WC	Integral Sanitation Cells	P:1:5
WCB	Contour 2 WC/duct cistern	Sanitary annexes and association areas etc	P:1:6
WCB(S)	Contour 2 WC/duct cistern (Sensorflow)	Sanitary annexes and association areas etc	P:1:7
WCC	Tiffany WC/duct cistern	Sanitary annexes and association areas etc	P:1:8
WCD	Contour WC/HL exposed cistern	Old establishments	P:1:9
WCE	Contour WC/flushvalve	Old establishments	P:1:10
WCF	Wentworth close coupled WC suite	Staff areas	P:1:11
WCG	Sandringham Magnia WC/duct cistern	Visitors areas	P:1:12
WCH	Sandringham Magnia WC/LL exposed cistern	Staff areas and clubs	P:1:13
WC CUB1	Laminated WC cubicle	Staff areas as directed by specifier	P:1:14
WC CUB2	Solid grade laminate WC cubicle	Inmates areas as directed by specifier	P:1:15
CS1	Cell screen	Inmates areas as directed by specifier	P:1:16
WBA	Sentry washbasin	Integration Sanitation Cells	P:1:17
WBB	Portman washbasin	Sanitary annexes and association areas etc	P:1:18
WBB(S)	Portman washbasin (Sensorflow)	Sanitary annexes and association areas etc	P:1:19
WBC	Portman washbasin	Staff areas	P:1:20
WBD	Portman pedestal washbasin	Staff areas	P:1:21
WBE	Sandringham countertop washbasin	Visiting areas and baby rooms	P:1:22
WBF	Salonex (shampoo basin)	Reception wings and other areas	P:1:23
WBG	Portman washbasin	Medical annexes	P:1:24
WBH	Sandringham Dorex washbasin	As directed by specifier	P:1:25
WBJ	Sandringham Corex corner basin	As directed by specifier	P:1:26
HR1	Handrinse basin	Kitchen areas	P:1:27
DF1	Aqualon drinking fountain	Throughout establishment	P:1:28
DF2	Puro drinking fountain	Throughout establishment	P:1:29
UR1	Sanura bowl urinal - exposed cistern	Male staff toilets	P:1:30
UR2	Sanura bowl urinal - concealed cistern	Inmates toilets- new or old establishment	P:1:31
UR2(S)	Sanura bowl urinal - (Sensorflow)	Inmates toilets- new or old establishment	P:1:32
UR2A	Contour bowl urinal - concealed cistern	Inmates toilets- new or old establishment	P:1:33
UR2A(S)	Contour bowl urinal - (Sensorflow)	Inmates toilets- new or old establishment	P:1:34
SH1	Modula shower tray	Staff shower areas	P:1:35
SH1A	Coniston shower tray	Staff shower areas	P:1:36
SH2	Shower assembly	Inmates shower areas	P:1:37
SH2(S)	Shower assembly (Sensorflow)	Inmates shower areas	P:1:38
SH CUB 1	Laminated shower cubicles	Inmates shower areas	P:1:39
SH CUB 2	Solid grade laminate shower cubicles	Staff shower areas as directed by specifier	P:1:40
S1	Birch cleaners Sink	As directed by specifier	P:1:41
S2	Belfast sink	As directed by specifier	P:1:42
S3	Fane slop sink	Inmates sanitary annexes	P:1:43
S4	Fane slop sink	Inmates sanitary annexes	P:1:44
B1	Nisa bath	Inmates reception areas	P:1:45
DIS1	Disabled WC compartment	Disabled areas (visitors)	P:1:46
DIS1A	Disabled WC compartment	Disabled areas (visitors)	P:1:47

N.B. A maintenance manual covering the items in this catalogue is available on request from the:-
Product Information Department Armitage Shanks, Armitage, Rugeley, Staffordshire, England. WS15 4BT
Telephone: 0870 122 8822 Fax: 0870 122 8282 Email: info@thebluebook.co.uk

For latest prices and delivery to your door visit MyTub Ltd - www.mytub.co.uk - info@mytub.co.uk 0844 556 1818

H.M. Prison Service

WCA

For use in integral sanitation cells, and other areas as directed by specifiers.

- *HM Prisons compliant*
- *Encapsulated in solid surface*
- *Bowl in vitreous china*



Illustrated

S3019CN Sentry solid surface/vitreous china back-to-wall WC pan, horizontal outlet, back inlet no seat holes
S362267 Conceala 2 duct cistern and cover, 6 litres capacity, pneumatic single flushvalve internal overflow, Simpla inlet connector
S4445MY Pneumatic push button-prison pattern

Material

Vitreous china/ solid surface

Weight

WC pan 40.0kg
Cistern 4.0kg

Colours

Available in Dune (CN) (illustrated), Fashion Grey (CM) & Vanilla (CL)

Standards

HM Prison compliant

Associated products

Panekta Connectors
S430501 converts to P trap
S430001 converts to S or turned P trap

Special notes

WC to be bolted to back wall and affixed in position using suitable bonding agent. A 35mm diameter hole is required to accommodate push button sleeve.

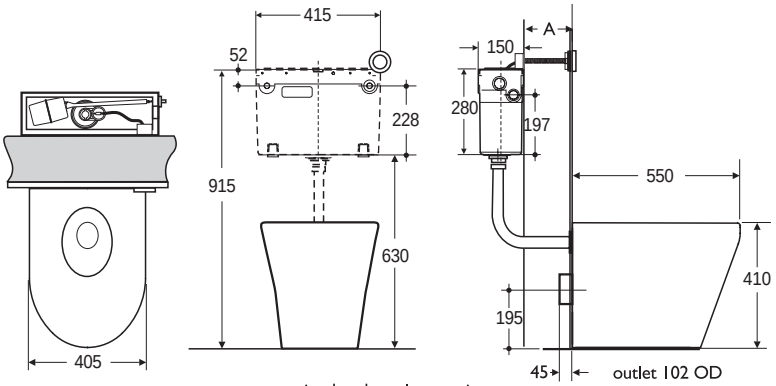

conversion bends outlet to suit 102 bore soil pipe

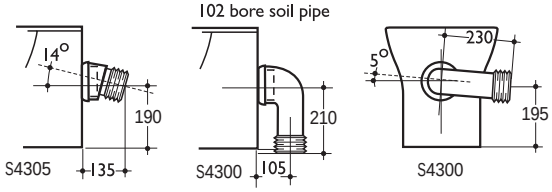



Dune (CN)



Fashion Grey (CM)



Vanilla (CL)

Product information
Tel: 0870 122 8822 Fax: 0870 122 8282
eMail: info@thebluebook.co.uk
www.thebluebook.co.uk

Armitage Shanks

For latest prices and delivery to your door visit MyTub Ltd - www.mytub.co.uk - info@mytub.co.uk 0844 556 1818

H.M. Prison Service

WCB

Sanitary annexes and association areas as directed by specifiers (not suitable for integral sanitation cells).

- *Back to wall*
- *Vitreous China*
- *Push button cistern*



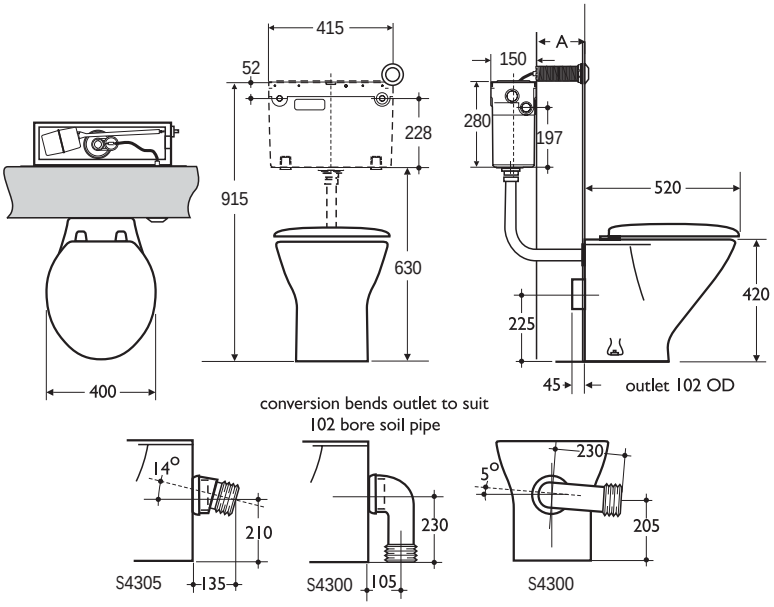

Illustrated

S342001 Contour 2 Vitreous China back to wall WC pan, horizontal outlet, back inlet, with seat holes
S362267 Conceala 2 duct cistern and cover, 6 litres capacity, pneumatic single flushvalve internal overflow, Simpla inlet connector
S4489MY Pneumatic push button for above cistern, wall thickness 400mm maximum
S910101 Domex Fixing screws (pair)
S406001 Bakasan seat and cover with cp metal pillars

Material

Vitreous china

Weight

WC pan 18.0kg
Cistern 4.0kg
Seat & cover 2.3kg

Colours

Available in White only

Standards

Vitreous china to BS 3402

Options

S466601 Plastic flushbend for wall thickness up to 400mm maximum

Associated products

Panekta Connectors
S430501 converts to P trap
S430001 converts to S or turned P trap

Special notes

A 45mm diameter hole is required to accommodate push button sleeve.

For latest prices and delivery to your door visit MyTub Ltd - www.mytub.co.uk - info@mytub.co.uk 0844 556 1818

H.M. Prison Service

WCB(S)

Sanitary annexes and association areas as directed by specifiers (not suitable for integral sanitation cells).

- *Back to wall*
- *Vitreous china*
- *Electronically activated*



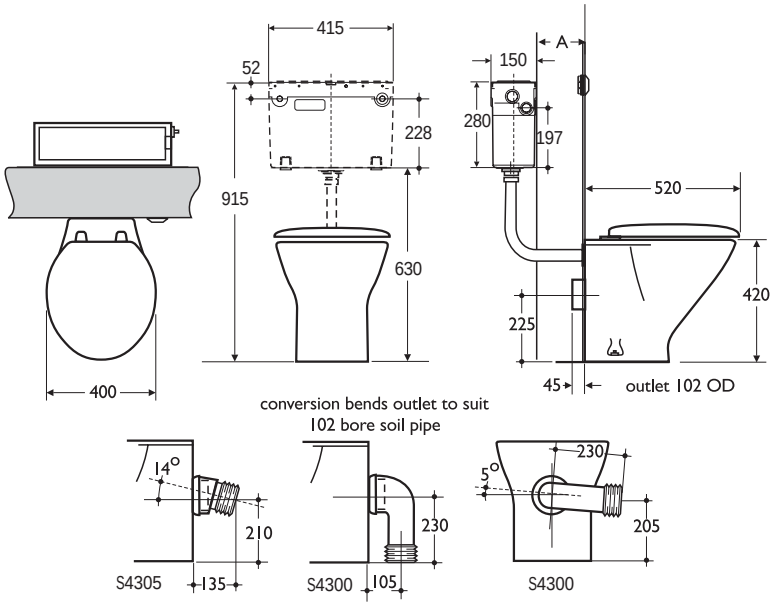

Illustrated

S342001 Contour 2 Vitreous China back to wall WC pan horizontal outlet, back inlet, with seat holes
S8112AA Sensorflow Solo WC flushing device including 6 litre cistern
S910101 Domex fixing screws (pair)
S406001 Bakasan seat and cover with CP metal pillars

Material

Vitreous china

Weight

WC pan 18.0kg
Seat & cover 2.3kg

Colours

Available in White only

Standards

Vitreous china to BS 3402

Options

S466601 plastic flushbend for wall thickness up to 400mm maximum

Associated products

Panekta Connectors
S430501 converts to P trap
S430001 converts to S or turned P trap

Special notes

The control box and sensor is supplied complete with Conceala 6 litre duct cistern and cover with Freeflo valve (pneumatic with internal overflow), overflow blanking plug, 1/2in Microvalve HP/LP side supply ballvalve, plastic flushbend, Simpla WC inlet connector and 0.8 metres of pneumatic connecting pipe. Sensorflow Solo can be installed in full compliance with the Water Regulations

Product information
Tel: 0870 122 8822 Fax: 0870 122 8282
eMail: info@thebluebook.co.uk
www.thebluebook.co.uk

For latest prices and delivery to your door visit MyTub Ltd - www.mytub.co.uk - info@mytub.co.uk 0844 556 1818

H.M. Prison Service

WCC

Sanitary annexes and association areas as directed by specifiers(not suitable for integral sanitation cells - box rim pattern).

- *Back to wall*
- *Vitreous china*
- *Push button cistern*



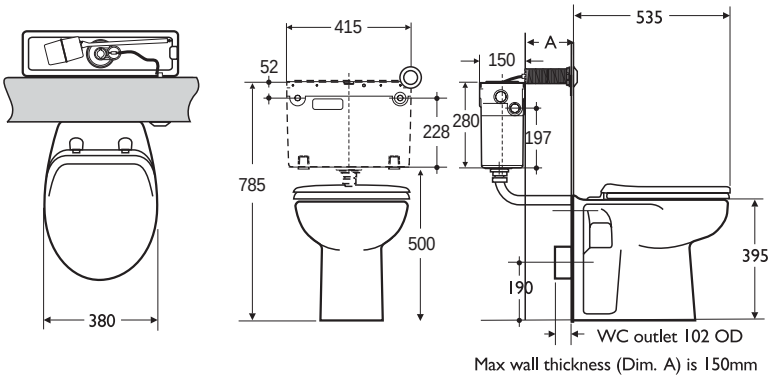

Max wall thickness (Dim. A) is 150mm

Conversion bends outlet to suit 102 bore soil pipe

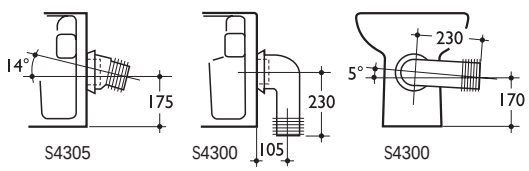

Illustrated

S341001 Tiffany Vitreous China back to wall WC pan,horizontal outlet, back inlet, with seat holes (Not suitable for cell use)
S362267 Conceala 2 duct cistern and cover, 6 litres capacity, pneumatic single flush flushvalve, internal overflow, Simpla inlet connector
S4489MY Pneumatic push button for above cistern, wall thickness 400mm maximum
S910101 Domex fixing screws (pair)
S406001 Bakasan seat and cover with cp metal pillars

Material

Vitreous china

Weight

WC pan 18.0kg
Cistern 4.0kg
Seat & cover 2.3kg

Colours

Available in White only

Standards

Vitreous china to BS 3402

Options

S466601 Plastic flushbend for wall thickness up to 400mm maximum

Associated products

Panekta Connectors
S430501 converts to P trap
S430001 converts to S or turned P trap

Special notes

A 45mm diameter hole is required to accommodate push button sleeve.

For latest prices and delivery to your door visit MyTub Ltd - www.mytub.co.uk - info@mytub.co.uk 0844 556 1818

H.M. Prison Service

WCD

For old establishments where duct cisterns are impractical.

- *Top inlet WC*
- *Integral S trap*
- *Vitreous china*



Illustrated

S343001 Contour Vitreous China back to wall WC S trap top inlet
S395601 Clena 2 high level cistern with screw down cover, 6 litres capacity with Freeflo plastics syphon fittings, 1/2in Microvalve HP/LP ballvalve, side supply, internal overflow, CP chain, rubber pull, supports and Isovalve servicing valve
S460067 1675mm flushpipe and clip
S910101 Domex fixing screws (pair)
S406301 Bakasan white plastic ring seat with CP metal pillars

Material

Vitreous china

Weight

WC pan 19.0kg
Cistern 19.0kg
Seat & cover 2.2kg

Colours

Available in White only

Standards

Vitreous china to BS 3402

Options

S395501 Clena 2 high level cistern with standard cover, 6 litres capacity with Freeflo plastics syphon fittings, 1/2in Microvalve HP/LP ballvalve, side supply, internal overflow, CP chain, rubber pull, supports and Isovalve servicing valve

Special notes

Suitable for use with **S432501** plastic outlet connector. Soil pipe socket not required.

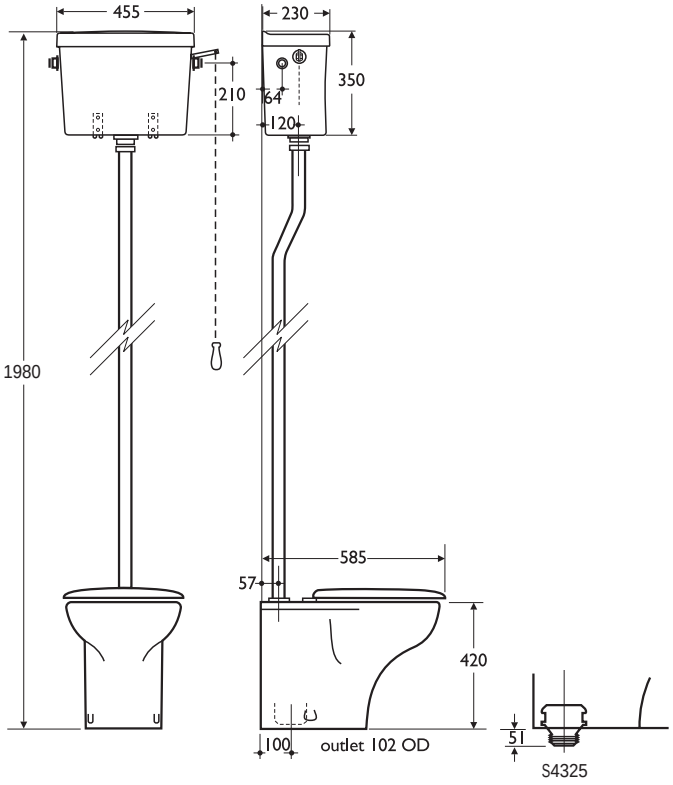

CI/SfB 376 (74) Jan 2003 Uniclass L721

Product information
Tel: 0870 122 8822 Fax: 0870 122 8282
eMail: info@thebluebook.co.uk
www.thebluebook.co.uk

For latest prices and delivery to your door visit MyTub Ltd - www.mytub.co.uk - info@mytub.co.uk 0844 556 1818

H.M. Prison Service

WCE

For old establishments where duct cisterns are impractical. (Must be approved by local water company).

- *back to wall*
- *vitreous china*



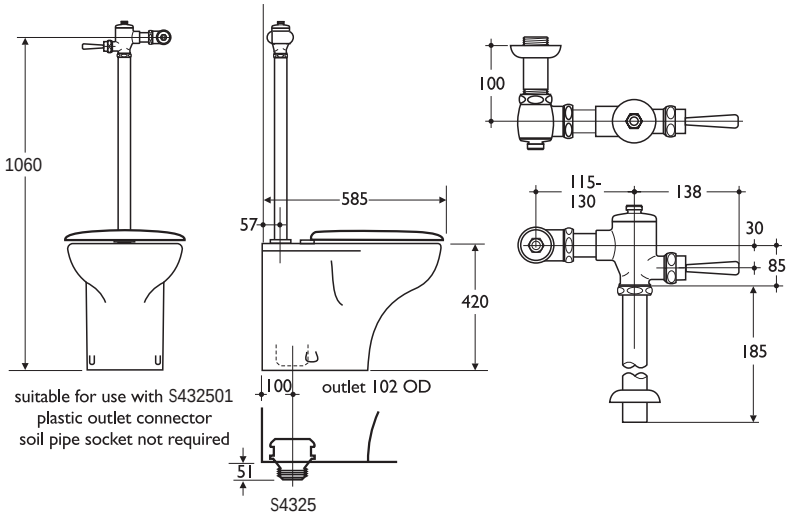

Illustrated

S343001 Contour Vitreous China back to wall WC pan top inlet S trap
S406301 Bakasan white plastic ring seat with CP metal pillars
S9014AA Modus 2 CP exposed flushvalve with operating lever and regulator, inlet 1¼in BSP male, with top inlet flushpipe
S935767 Adaptus rubber inlet connector
S910101 Domex fixing screws (pair)

Material

Vitreous china

Weight

WC pan 18kg

Colours

Available in White only

Standards

Vitreous china to BS 3402

Special notes

Suitable for use with **S432501** plastic outlet connector. Soil pipe socket not required.

For latest prices and delivery to your door visit MyTub Ltd - www.mytub.co.uk - info@mytub.co.uk 0844 556 1818

H.M. Prison Service

WCF

Staff areas, as directed by specifiers.

- *Close coupled*
- *Vitreous china*
- *Bolt on cover*



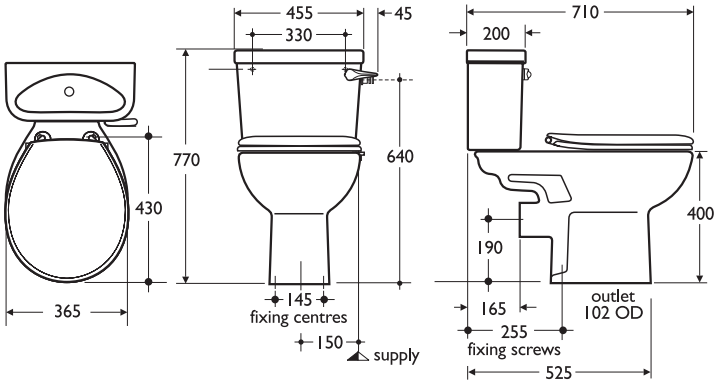

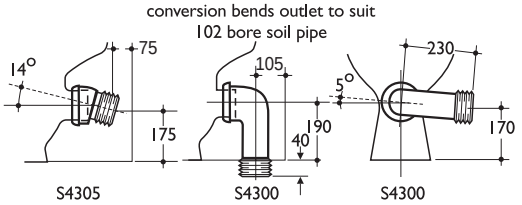

Illustrated

S316101 Wentworth 2 WC pan
S392701 New Universal Group cistern, 6 litre, bottom supply and internal overflow with Freeflo plastic syphon fittings and ½in Microvalve HP/LP bottom supply ballvalve with Whisperflo refill unit, internal overflow, and close coupling fitment, chrome plated lever with screwdown cover
S405501 Gemini white seat and cover
S910101 Domex screws (pair)

Material

Vitreous china

Weight

WC pan 15.5kg
Cistern 19.0kg
Seat & cover 1.8kg

Colours

Available in White only

Standards

WC conforms to BS 5503: 1990
Vitreous china to BS 3402

Options

S392801 new Universal group cistern, for side supply and internal overflow with screwdown cover
S392101 new Universal group cistern, for bottom supply and internal overflow
S392101 new Universal group cistern with side supply and internal overflow

Associated products

Panekta Connectors
S430501 converts to P trap
S430001 converts to S trap or turned P trap

Special notes

Cistern fittings are not reversible.

Product information
Tel: 0870 122 8822 Fax: 0870 122 8282
eMail: info@thebluebook.co.uk
www.thebluebook.co.uk

For latest prices and delivery to your door visit MyTub Ltd - www.mytub.co.uk - info@mytub.co.uk 0844 556 1818

H.M. Prison Service

WCG

Visitors areas, as directed by specifiers.

- *Conforms to British Standards*
- *Vitreous china*
- *Push button cistern*



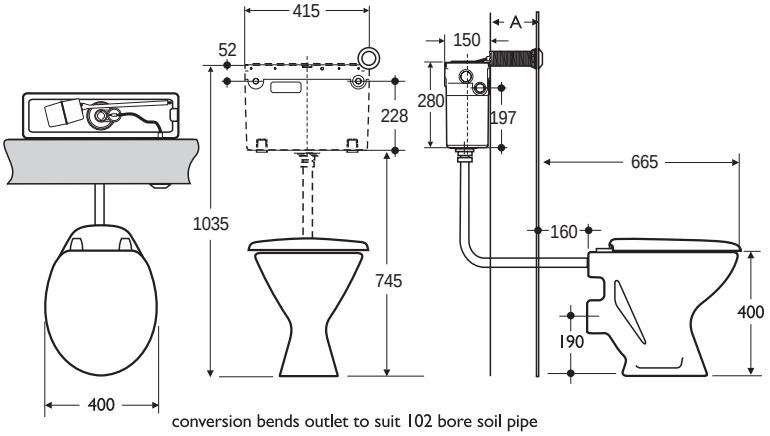

conversion bends outlet to suit 102 bore soil pipe

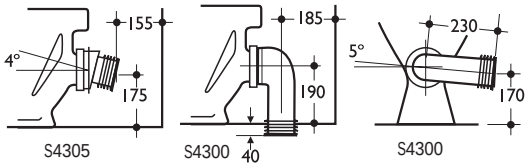

Illustrated

S351001 Sandringham/ Magnia Vitreous China washdown WC, horizontal outlet
S362267 Conceala 2 duct cistern and cover, 6 litres capacity, pneumatic single flush flushvalve, internal overflow, Simpla inlet connection
S4489MY Pneumatic push button mechanism for above cistern, wall thickness 400mm maximum
S910201 Domex fixing screws (set of four)
S406001 Bakasan seat and cover with CP metal pillars

Material

Vitreous china

Weight

WC pan 12.0kg
Cistern 4.0kg
Seat & cover 2.3kg

Colours

Available in White only

Standards

Vitreous china to BS 3402

Options

S466601 Plastic flushbend for wall thickness in excess of 60mm (details to be advised)

Associated products

Panekta Connectors
S430501 converts to P trap
S430001 converts to S trap or turned P trap

For latest prices and delivery to your door visit MyTub Ltd - www.mytub.co.uk - info@mytub.co.uk 0844 556 1818

H.M. Prison Service

WCH

Staff areas and clubs as directed by specifiers.

Open flushing rim.

- *Conforms to British Standards*
- *Bolt on cover*
- *Vitreous china*



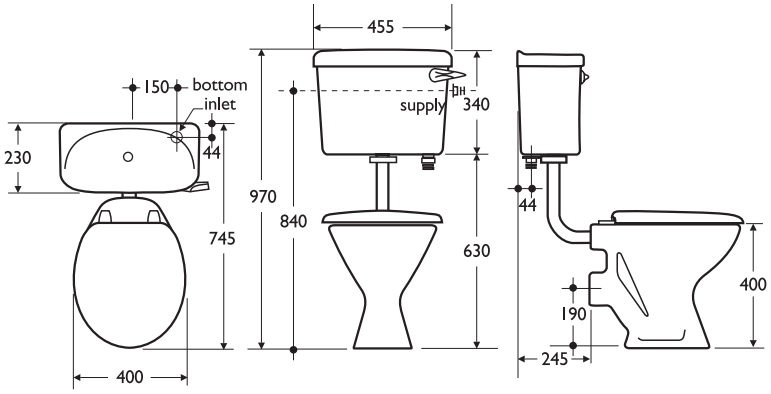

conversion bends outlet to suit 102 bore soil pipe

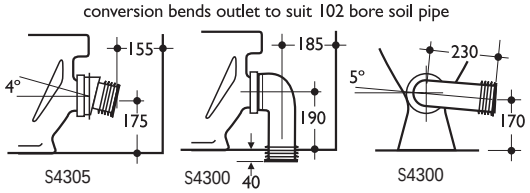

Illustrated

S351001 Sandringham/ Magnia Vitreous China washdown WC, horizontal outlet
S390501 Sandringham/ Magnia Vitreous China low level cistern 6 litres capacity for bottom supply and internal overflow, with Freeflo syphon fittings, 1/2in Microvalve HP/LP ballvalve, plastics flushbend, Simpla inlet connector, supports and Isovalve servicing valve with screwdown cover
S405501 Gemini white seat and cover
S910201 Domex fixing screws (set of four)

Material

Vitreous china

Weight

WC pan 12.0kg
Cistern 19.0kg
Seat & cover 1.8kg

Colours

Available in White only

Standards

WC pan conforms to BS 5503: 1990
Vitreous china to BS 3402

Options

S390401 Compact cistern, for side supply and internal overflow with screwdown cover
S390201 Compact cistern, for bottom supply and internal overflow
S390001 Compact cistern for side supply and internal overflow

Associated products

Panekta Connectors
S430501 converts to P trap
S430001 converts to S or turned P trap

Product information
Tel: 0870 122 8822 Fax: 0870 122 8282
eMail: info@thebluebook.co.uk
www.thebluebook.co.uk

For latest prices and delivery to your door visit MyTub Ltd - www.mytub.co.uk - info@mytub.co.uk 0844 556 1818

H.M. Prison Service

WC CUB 1

Areas as directed by specifiers.

- *Heat, scratch and impact resistant*
- *Choice of fittings*
- *Three performance options*
- *Practical and efficient*



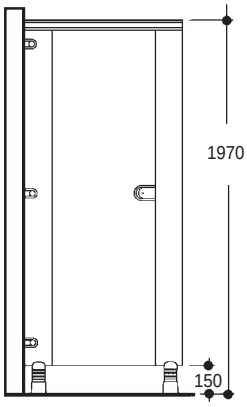

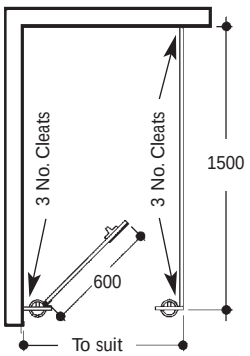

Bracket fixing detail

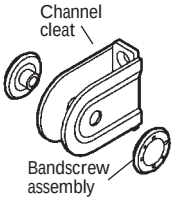

WC cubicles

QUANTUM TUFWALL cubicles are available with full length doors as illustrated above.

Specification

Partitions, pilasters and doors are manufactured from 17mm moisture resistant grade chipboard faced both sides with high pressure laminate from the Armitage Venesta preferred colour range. The overall thickness is 19mm.
Colour chart available on request.

Door and partition edges are 3mm profile PVC lipping which absorb inevitable knocks and blows.

Fixing to wall

High strength polycarbonate cleats screwed to wall and partition with anti tamper band screws.

Fixing to floor

High strength polycarbonate pedestals to give 150mm ground clearance screwed to floor and bottom of pilaster.

Headrail

Silver anodised or powder coated grey aluminium extrusion fitted over pilaster and screw fixed.

Hinges

Light or dark grey powder coated adjustable hinge face fixed to door and front.

Indicator bolt

High strength polycarbonate bolts have simple locking action with emergency release facility designed to minimise damage and cost in the event of misuse and abuse.

Coat hook

Dark grey polycarbonate hook with concealed fixing.

For latest prices and delivery to your door visit MyTub Ltd - www.mytub.co.uk - info@mytub.co.uk 0844 556 1818

H.M. Prison Service

WC CUB 2

Areas as directed by specifiers.

Panels are manufactured from 13mm solid grade laminate. The edge are polished and radiused producing a panel that is safe, hygienic and exceptionally tough. Designed to withstand wet, humid conditions and the rigours of areas susceptible to vandalism.

- *For wet and humid conditions*
- *Anti vandal*
- *Suitable for tough environments*
- *Choice of fittings*
- *Trespa solid grade laminate*



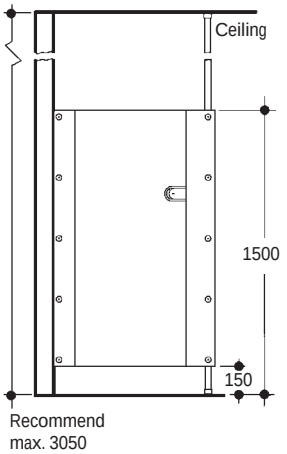

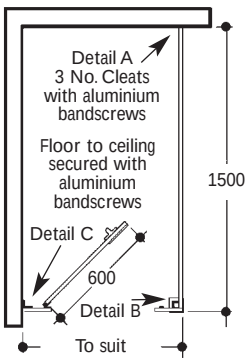

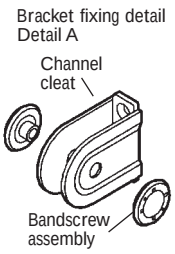

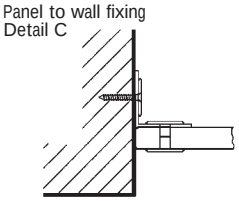

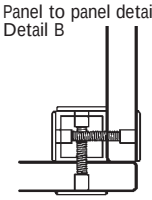

WC cubicles

MILLENNIUM cubicles are available with decency length doors as illustrated above.

Specification

Partitions, pilasters and doors are manufactured from extremely strong 13mm solid grade laminate.
Solid laminate is suitable in wet areas, its surface is impervious to bacteria and fungi, offering high impact and total water resistance.
Colour chart available on request.

Door and partition edges are polished and radiused producing a panel that is safe, hygienic and exceptionally tough.

Fixing to wall

High strength polycarbonate cleats screwed to wall and partition with anti tamper band screws. Pilasters are secured to wall with 50 x 50mm aluminium angle and to 32 x 32mm square posts at intermediate and return positions. Anti tamper aluminium bandscrews are used to secure. This method of fixing eliminates headrail sections.

Fixing to floor and ceiling

Extruded aluminium 32mm square posts with flanges to screw to floor and ceiling to give 150mm clearance.
Floor clearance can be adjusted to suit client requirements.

Hinges

Light or dark grey powder coated adjustable hinge face fixed to door and front.

Indicator bolt

High strength polycarbonate bolts have simple locking action with emergency release facility designed to minimise damage and cost in the event of misuse and abuse.

Coat hook

Dark grey polycarbonate hook with concealed fixing.

Product information
Tel: 0870 122 8822 Fax: 0870 122 8282
eMail: info@thebluebook.co.uk
www.thebluebook.co.uk
Armitage Shanks
For latest prices and delivery to your door visit MyTub Ltd - www.mytub.co.uk - info@mytub.co.uk 0844 556 1818

H.M. Prison Service

CS1

Inmates areas directed by specifiers.

- *Heat, scratch and impact resistant*
- *Choice of colours*
- *Practical and efficient*

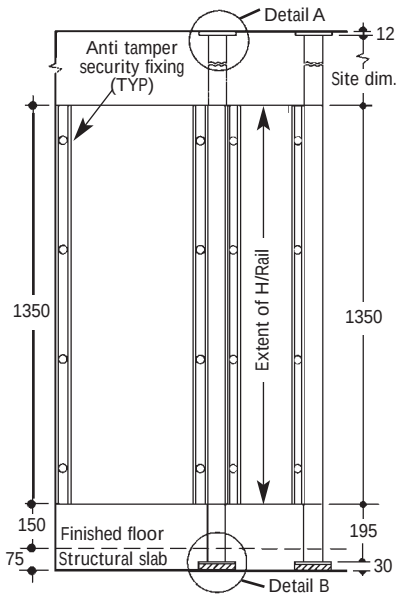

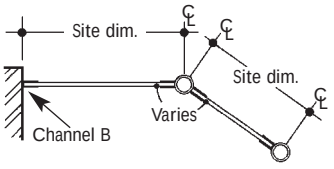

Plan on intermediate support

Channel B secured to aluminium post by Armitage Venesta. Top and bottom of channel is welded for security purposes.

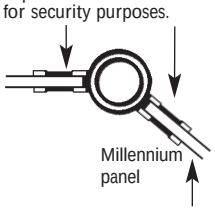

Plan on end support

Channel B secured to aluminium post by Armitage Venesta.

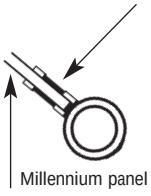

Datail A. (ceiling)

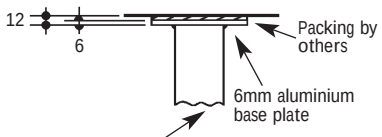

63mm dia. aluminium tube section

Datail B. (floor)

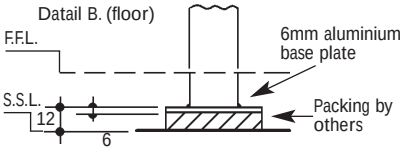

When ordering specify full installation details

Inmates cell screen

Specification

MILLENNIUM partitions are manufactured from extremely strong 13mm solid grade laminate. Solid laminate is suitable in wet areas, its surface is impervious to bacteria and fungi, offering high impact and total water resistance.

Fixing to wall

Aluminium channel with pre-drilled screw fixing holes secured to panel with anti tamper aluminium bandscrews. Loctite is supplied for for coating bandscrews before securing.

Fixing to floor

Aluminium 63mm diam tube posts with aluminium screw to floor base plate for fixing below finished floor line.

Fixing to ceiling

Tube posts as above with top plate for fixing to ceiling.

Aluminium post and channels can be supplied in either powder coated light or dark grey. Channels are factory fitted to post and are welded top and bottom for security purposes.

For latest prices and delivery to your door visit MyTub Ltd - www.mytub.co.uk - info@mytub.co.uk 0844 556 1818

H.M. Prison Service

WB A

For use in integral sanitation cells and other areas as directed by specifiers.

- *HM Prisons compliant*
- *Solid surface*
- *Back outlet*





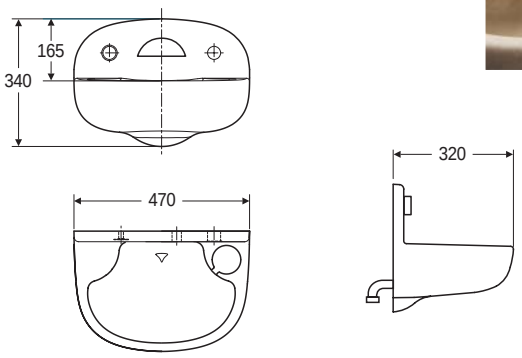

Illustrated
S2127CN Sentry solid surface washbasin with back outlet, 2 tapholes, 2 push button valves, integrated nozzles, pneumatic operation

Material
Solid surface

Weight
washbasin 14.0kg

Colours
Available in Dune (CN) (illustrated), Fashion Grey (CM) & Vanilla (CL)

Standards
HM Prison compliant

Options
S2126 Sentry solid surface washbasin with back outlet, 1 taphole, single push button valve, integrated nozzle, pneumatic operation
S2129 Sentry solid surface washbasin with back outlet, 2 tapholes, 2 touch sensors, solenoid valves, integrated nozzles, electronic operation
S2128 Sentry solid surface washbasin with back outlet, 1 taphole, single touch sensor, solenoid valve, integrated nozzle, electronic operation

Special notes
Pneumatic and electronic valves include operation buttons. Electronic control kit requires 240v mains supply



Dune (CN)



Fashion Grey (CM)



Vanilla (CL)

Product information
Tel: 0870 122 8822 Fax: 0870 122 8282
eMail: info@thebluebook.co.uk
www.thebluebook.co.uk

Armitage Shanks

For latest prices and delivery to your door visit MyTub Ltd - www.mytub.co.uk - info@mytub.co.uk 0844 556 1818

H.M. Prison Service

WBB

Sanitary annexes and association areas.

- *Bracket mounted*
- *Vitreous china*

washbasin



Illustrated

S222101 Portman Vitreous China basin 500x420mm, 2 tapholes with overflow, no chainhole
S7239AA Avon ½in non-concussive self closing pillar taps
S8733AA 1¼in waste with swivel plug, and 80mm slotted tail
S915267 Concealed bracket with fixing clamps, hexagon nuts and centre bracket in aluminium alloy
S918567 M/S backplate and bolts. Please state wall thickness to ensure correct length of bolts are supplied
S8960AA 1¼in bend to wall and wall flange (suitable only for compression fittings)

Material

Vitreous china

Weight

Washbasin 10.0kg

Colours

Available in White only

Standards

Vitreous china to BS 3402

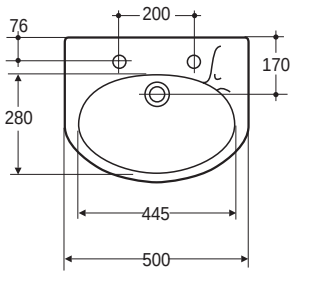

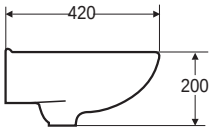

IBP Conex P and S traps
P trap 211 1¼in
S trap 211 1¼in

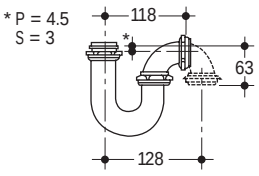

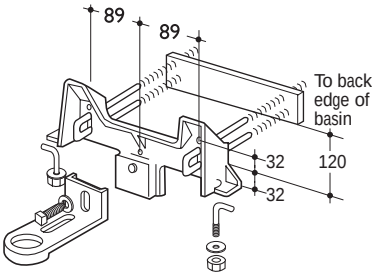

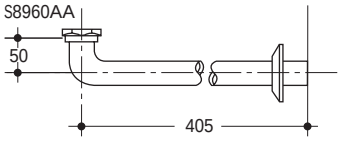

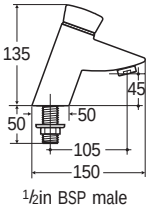

½in BSP male

For latest prices and delivery to your door visit MyTub Ltd - www.mytub.co.uk - info@mytub.co.uk 0844 556 1818

H.M. Prison Service

WBB(S)

Sanitary annexes and association areas.

- *Bracket mounted*
- *Vitreous china*



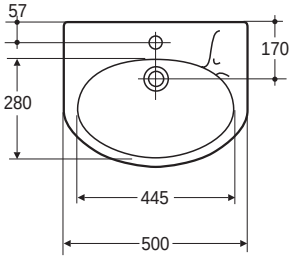

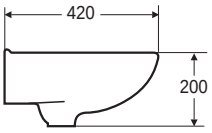

IBP Conex P and S traps
P trap 211 1¼in
S trap 211 1¼in

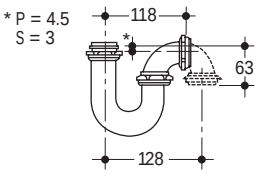

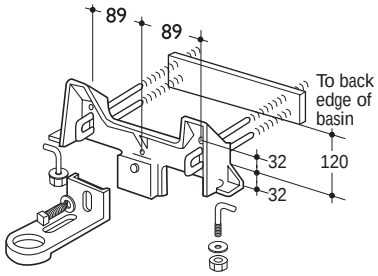

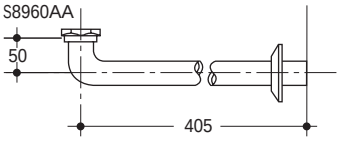

Illustrated

S223101 Portman Vitreous China basin 500x420mm, central taphole, with overflow, no chainhole
S8101AA Sensorflow basin mounted high rise proximity sensor spout
S8100NU Sensorflow programmable control unit, heavy duty lockable box to control up to ten basins
S8733AA 1¼in waste with swivel plug, and 80mm slotted tail
S915267 concealed bracket with fixing clamps, hexagon nuts and centre bracket in aluminium alloy
S918567 M/S backplate and bolts. Please state wall thickness to ensure correct length of bolts are supplied
S8960AA 1¼in bend to wall and wall flange (suitable only for compression fittings)

Material

Vitreous china

Weight

Washbasin 10.0kg

Colours

Available in White only

Standards

Vitreous china to BS 3402

Options

S8135AA Sensorflow Solo high rise washbasin mounted spout with integral sensor servicing valve and filter

Special notes

The sensor detects the presence of hands and delivers water whilst they are present, up to a maximum of 2 minutes. Water flow will stop four seconds after hands are removed. The control unit incorporates an over ride facility to allow sterilisation procedures to be carried out

Product information
Tel: 0870 122 8822 Fax: 0870 122 8282
eMail: info@thebluebook.co.uk
www.thebluebook.co.uk

For latest prices and delivery to your door visit MyTub Ltd - www.mytub.co.uk - info@mytub.co.uk 0844 556 1818

H.M. Prison Service

WBC

Staff areas.

- *Bracket mounted*
- *Vitreous china*



Illustrated

S222101 Portman Vitreous China basin 500x420mm, 2 tapholes with overflow, no chainhole
S7106AA Nuastyle ½in pillar taps
S8733AA 1¼in waste with swivel plug, and 80mm slotted tail
S915267 Concealed bracket with fixing clamps, hexagon nuts and centre bracket in aluminium alloy
S918567 M/S backplate and bolts. Please state wall thickness to ensure correct length of bolts are supplied
S892067 1¼in re-sealing plastic bottle trap
S897567 1¼in extension pipe to wall with flange and multi purpose outlet

Material

Vitreous china

Weight

Washbasin 10.0kg

Colours

Available in White only

Standards

Vitreous china to BS 3402

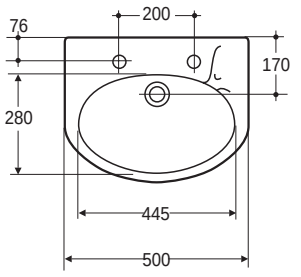

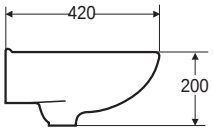

IBP Conex P and S traps
P trap 211 1¼in
S trap 211 1¼in

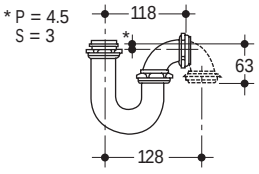

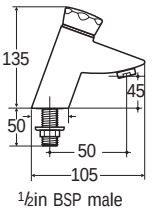

½in BSP male

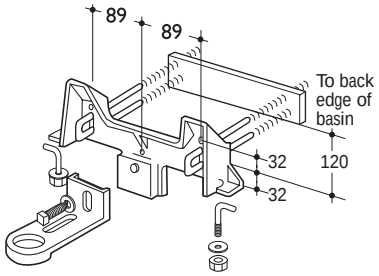

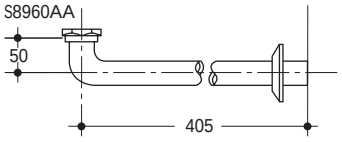

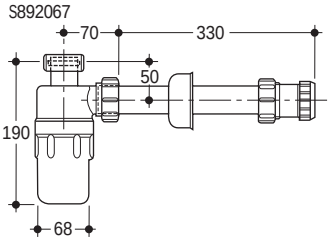

Armitage Shanks
Product information
Tel: 0870 122 8822 Fax: 0870 122 8282
eMail: info@thebluebook.co.uk
www.thebluebook.co.uk

CI/SfB 376 (74) Jan 2003
Uniclass L721

For latest prices and delivery to your door visit MyTub Ltd - www.mytub.co.uk - info@mytub.co.uk 0844 556 1818

H.M. Prison Service

WBD

Staff areas

- *Pedestal mounted*
- *Vitreous china*



Illustrated

S222001 Portman Vitreous China basin 500x420mm, 2 tapholes with overflow, and chainhole
S295501 Ova Vitreous China pedestal
S7106AA Nuastyle ½in pillar taps
S8800AA 1¼in bead chain waste and plug, 80mm slotted tail, bolt stay
S911067 concealed brackets
S918667 M/S backplate and bolts. Please state wall thickness to ensure correct length of bolts are supplied
S892067 1¼in plastics re-sealing bottle trap
S897567 1¼in extension pipe to wall with flange and multi-purpose outlet

Material
Vitreous china

Weight
Washbasin 10.0kg

Colours
Available in White only

Standards
Vitreous china to BS 3402

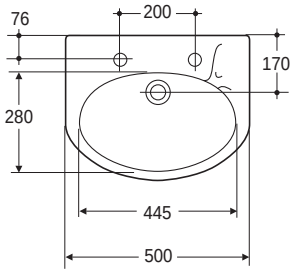

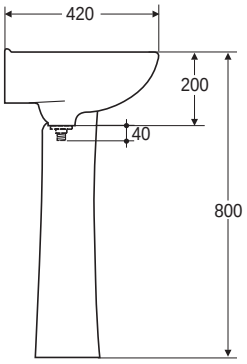

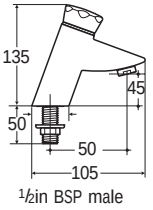

IBP Conex P and S traps
P trap 211 1¼in
S trap 211 1¼in

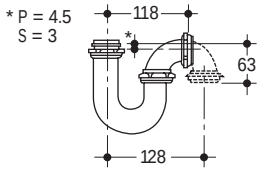

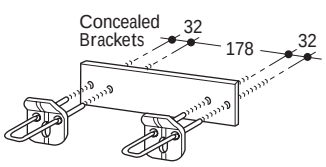

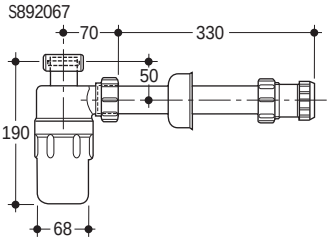

Product information
Tel: 0870 122 8822 Fax: 0870 122 8282
eMail: info@thebluebook.co.uk
www.thebluebook.co.uk

Armitage Shanks

For latest prices and delivery to your door visit MyTub Ltd - www.mytub.co.uk - info@mytub.co.uk 0844 556 1818

H.M. Prison Service

WBE

Visiting areas, baby rooms or as directed by specifiers.

- *Countertop mounted*
- *vitreous china*

washbasin



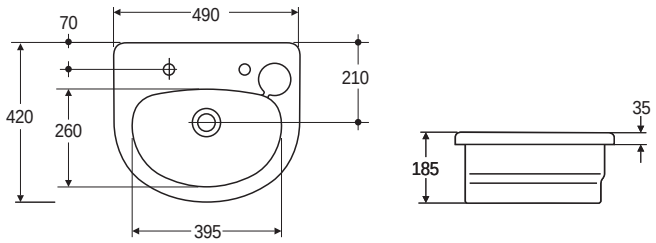

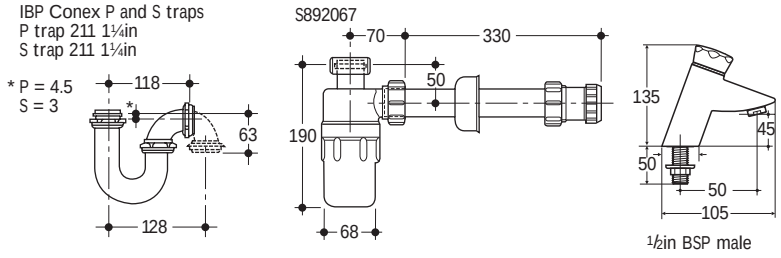

Illustrated

Washbasin comprising
S250901 Sandringham countertop basin with 2 tapholes, no chainstay hole with overflow
S7106AA Nuastyle ½in pillar taps
S8733AA 1¼in CP waste with swivel plug and 80mm slotted rail
S892067 1¼in plastics re-sealing bottle trap
S897567 1¼in extension pipe to wall with flange and multi-purpose outlet

Material

Vitreous china

Weight

Washbasin 10.0kg

Colours

Available in White only

Standards

Vitreous china to BS 3402

For latest prices and delivery to your door visit MyTub Ltd - www.mytub.co.uk - info@mytub.co.uk 0844 556 1818

H.M. Prison Service

WBF

Reception wings and other areas as directed by specifiers.

- *Front wash basin*
- *Vitreous china*
- *Bracket mounted*



Illustrated

S230201 Salonex Vitreous China washbasin 610x510mm,one right hand taphole 36mm diameter, no overflow, no chain hole
S917567 Screw to wall brackets in aluminium alloy
S7815AA Nuastyle 1/2in concealed thermostatic valve recessed into wall and situated to suit site conditions
S9403AA Flexible hose, handspray, CP knuckle and metal sleeve (for concealed supply)
S8720AA 1 1/4in strainer waste
S892067 1 1/4in plastics re-sealing bottle trap
S897567 1 1/4in extension to wall with flange and multi-purpose outlet

Material
Vitreous china

Weight
Washbasin 10.0kg

Colours
Available in White only

Standards
Vitreous china to BS 3402

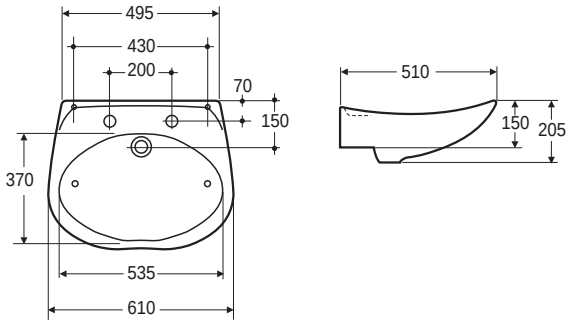

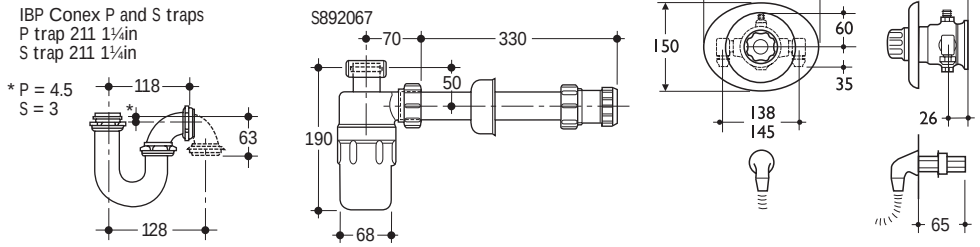

Product information
Tel: 0870 122 8822 Fax: 0870 122 8282
eMail: info@thebluebook.co.uk
www.thebluebook.co.uk

Armitage Shanks

For latest prices and delivery to your door visit MyTub Ltd - www.mytub.co.uk - info@mytub.co.uk 0844 556 1818

H.M. Prison Service

WBG

As directed by specifiers- Medical situation only.

- *Bracket mounted*
- *HTM64 listed*
- *Vitreous china*



Illustrated

S227201 Portman washbasin 600x480mm, no tapholes no overflow
S915267 concealed bracket with fixing clamps, hexagon nuts and centre bracket in aluminium alloy.
S918567 M/S backplate and bolts. Please state wall thickness to ensure correct length of bolts are supplied
S8210AA Markwik 1/2in wall mounted mixer with 150mm levers, swivel nozzle and anti-splash outlet - inlets for concealed supplies
S8720AA 1 1/4in strainer waste with 75mm unslotted tail
S892067 1 1/4in plastics re-sealing bottle trap
S897567 1 1/4in extension to wall with flange and multi-purpose outlet

Material

Vitreous china

Weight

Washbasin 15.0kg

Colours

Available in White only

Standards

Vitreous china to BS 3402

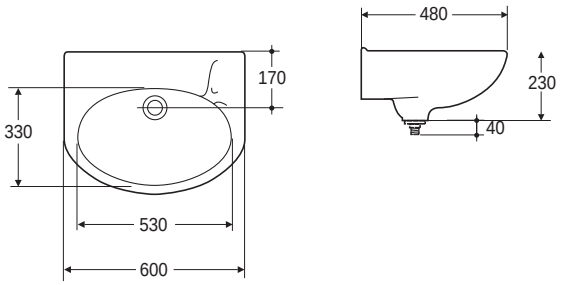

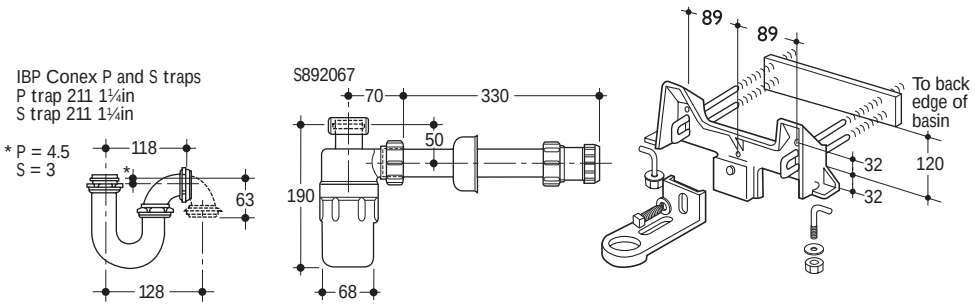

For latest prices and delivery to your door visit MyTub Ltd - www.mytub.co.uk - info@mytub.co.uk 0844 556 1818

H.M. Prison Service

WBH

As directed by specifiers (staff areas).

- *Short projection*
- *Vitreous china*



Illustrated

S270701 Sandringham/ Dorex washbasin 450x285mm, with 2 tapholes and overflow
S911067 concealed screw to wall hangers
S918867 M/S backplate and bolts. Please state wall thickness to ensure correct length of bolts are supplied
S7106AA Nuastyle ½in pillar taps
S8733AA 1¼in waste with swivel plug and 80mm slotted rail
S892067 1¼in plastics re-sealing bottle trap
S897567 1¼in extension to wall with flange and multi-purpose outlet
S9513AA chainstay hole stopper

Material

Vitreous china

Weight

Washbasin 9.0kg

Colours

Available in White only

Standards

Vitreous china to BS 3402

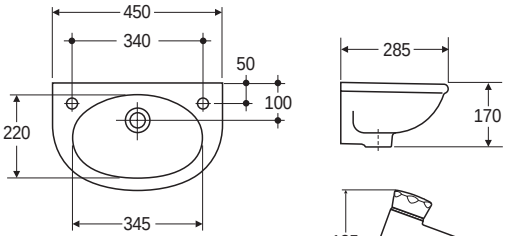

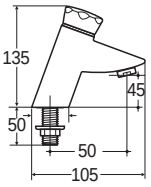

½in BSP male

IBP Conex P and S traps
P trap 211 1¼in
S trap 211 1¼in

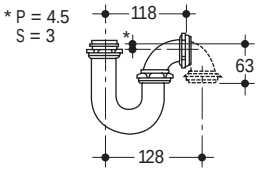

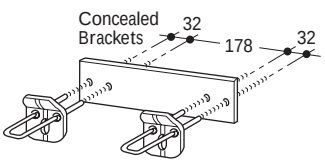

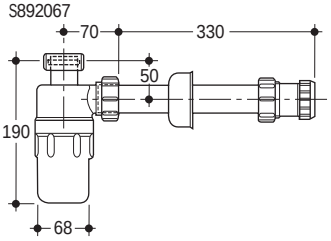

Product information
Tel: 0870 122 8822 Fax: 0870 122 8282
eMail: info@thebluebook.co.uk
www.thebluebook.co.uk

Armitage Shanks

For latest prices and delivery to your door visit MyTub Ltd - www.mytub.co.uk - info@mytub.co.uk 0844 556 1818

H.M. Prison Service

WBJ

As directed by specifiers- Medical situation only.

- *Space saving*
- *Vitreous china*



Illustrated

S270901 Sandringham/ Corex corner basin 475mm with 2 tapholes at 100mm centres and overflow
S911067 concealed brackets
S918967 pair of M/S backplates and bolts
Please state wall thickness to ensure correct length of bolts are supplied
S7106AA Nuastyle ½in pillar taps
S8800AA 1¼in bead chain waste and plug 80mm slotted tail, bolt stay
S892067 1¼in plastics re-sealing bottle trap
S897567 1¼in extension to wall with flange and multi-purpose outlet
S910101 Domex fixing screws (pair)

Material

Vitreous china

Weight

Washbasin 8.0kg

Colours

Available in White only

Standards

Vitreous china to BS 3402

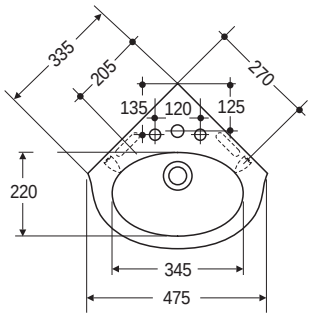

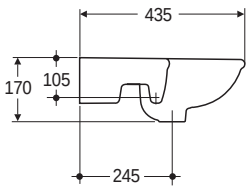

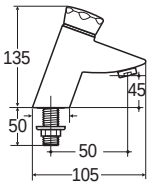

½in BSP male

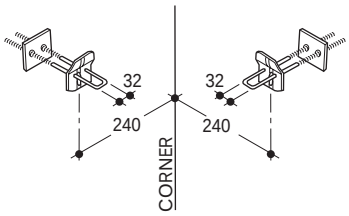

IBP Conex P and S traps
P trap 211 1¼in
S trap 211 1¼in

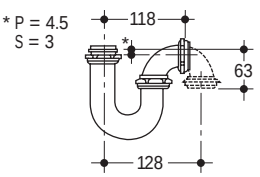

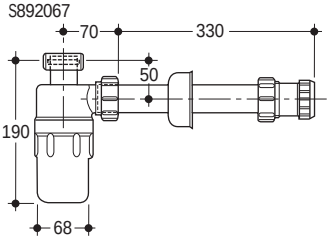

For latest prices and delivery to your door visit MyTub Ltd - www.mytub.co.uk - info@mytub.co.uk 0844 556 1818

H.M. Prison Service

HR1

Kitchen areas.

Handrinse is a specialist recessed washbasin providing exceptionally secure fixing when built into a structural wall.

- *Space saving*
- *Partially recessed*
- *Vitreous china*



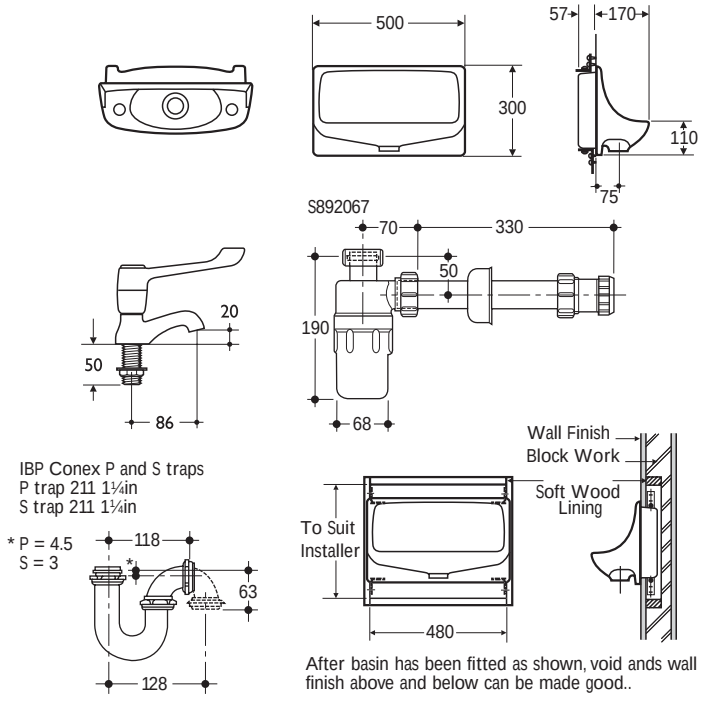

After basin has been fitted as shown, void ands wall finish above and below can be made good..

Illustrated

S272001 Handrinse washbasin 500mm with 2 tapholes, no overflow
S919567 fixing brackets and bolts (set of 4)
S8260AA ½in lever action pillar taps hot and cold
S8734AA 1¼in waste with swivel plug and 80mm unslotted rail
S892067 1¼in plastics re-sealing bottle trap
S897567 1¼in extension to wall with flange and multi-purpose outlet

Material

Vitreous china

Weight

Washbasin 11.0kg

Colours

Available in White only

Standards

Vitreous china to BS 3402

Product information
Tel: 0870 122 8822 Fax: 0870 122 8282
eMail: info@thebluebook.co.uk
www.thebluebook.co.uk

For latest prices and delivery to your door visit MyTub Ltd - www.mytub.co.uk - info@mytub.co.uk 0844 556 1818

H.M. Prison Service

DF1

Drinking fountain in vitreous china.

With hygienic non-squirting jet positioned above flood level.

Throughout establishments.

- *Drinking fountain*
- *Hygienic jet*
- *Non-concussive valve*



Illustrated

S540101 Aqualon Vitreous China drinking fountain
S5403AA 1/2in self closing non-concussive valve, 1 1/4in brass strainer waste, concealed hanger for wall fixing and Domex screw
S892067 1 1/4in plastics re-sealing bottle trap
S897567 1 1/4in extension to wall with flange and multi-purpose outlet

Material

Vitreous china

Weight

Fountain 10.0kg
Fittings pack 2.0kg

Colours

Available in White only

Standards

Vitreous china to BS 3402

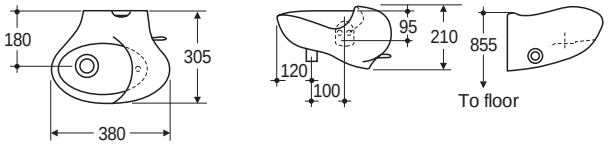

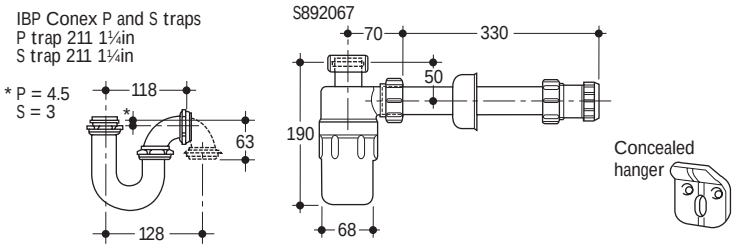

For latest prices and delivery to your door visit MyTub Ltd - www.mytub.co.uk - info@mytub.co.uk 0844 556 1818

H.M. Prison Service

DF2

Throughout establishments, clubs and mess units.

The shrouded jet on the Puro all metal fountain prevents transmission of infection.

The self-cleaning jet is located above flood level.

Thief resistant with integral regulator and self-closing valve.

Supply and waste can be concealed within galvanised tubular pedestal and galvanised cast iron base.

- *Flow control to regulate jet height*
- *Hygienic shrouded jet*
- *Galvanised pedestal option*
- *Anti vandal*

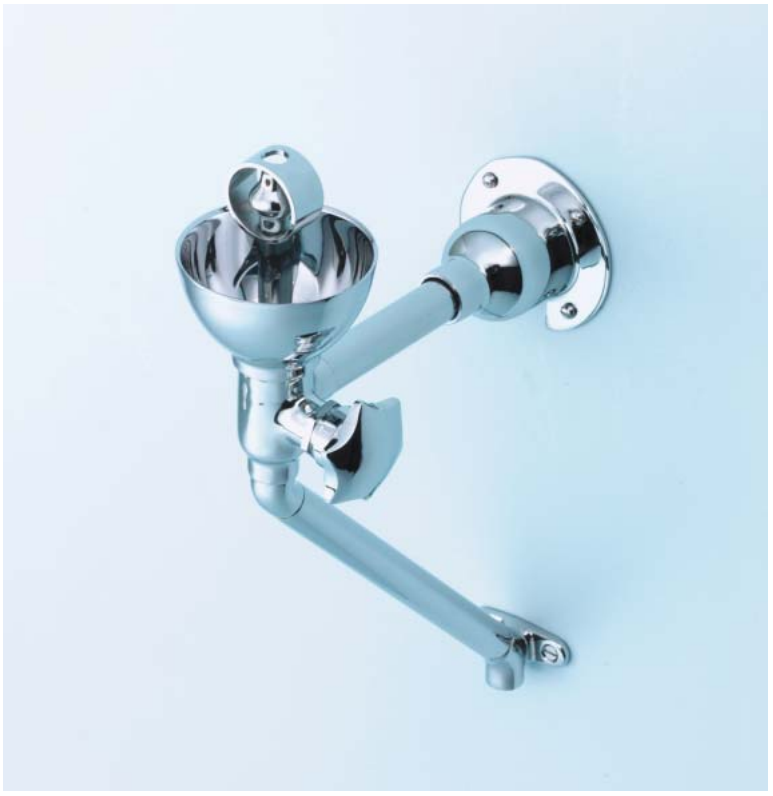

Illustrated

S5425 Puro Metal drinking fountain, raised jet, integral supply and waste pipes with rotating handwheel and pre-set jet control

Weight

S5425 4.0kg

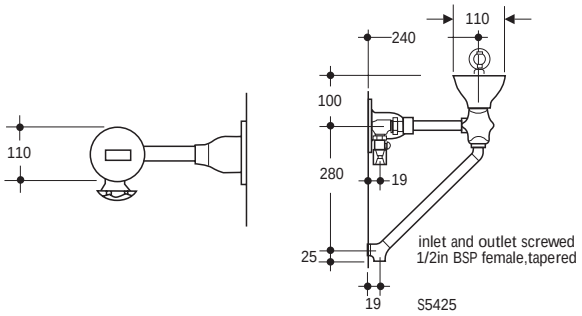

fountains

Product information
Tel: 0870 122 8822 Fax: 0870 122 8282
eMail: info@thebluebook.co.uk
www.thebluebook.co.uk

For latest prices and delivery to your door visit MyTub Ltd - www.mytub.co.uk - info@mytub.co.uk 0844 556 1818

H.M. Prison Service

UR1

For use in male staff toilets.

Wall urinal in vitreous china for exposed plumbing.

- *Wall urinal*
- *Vitreous china*



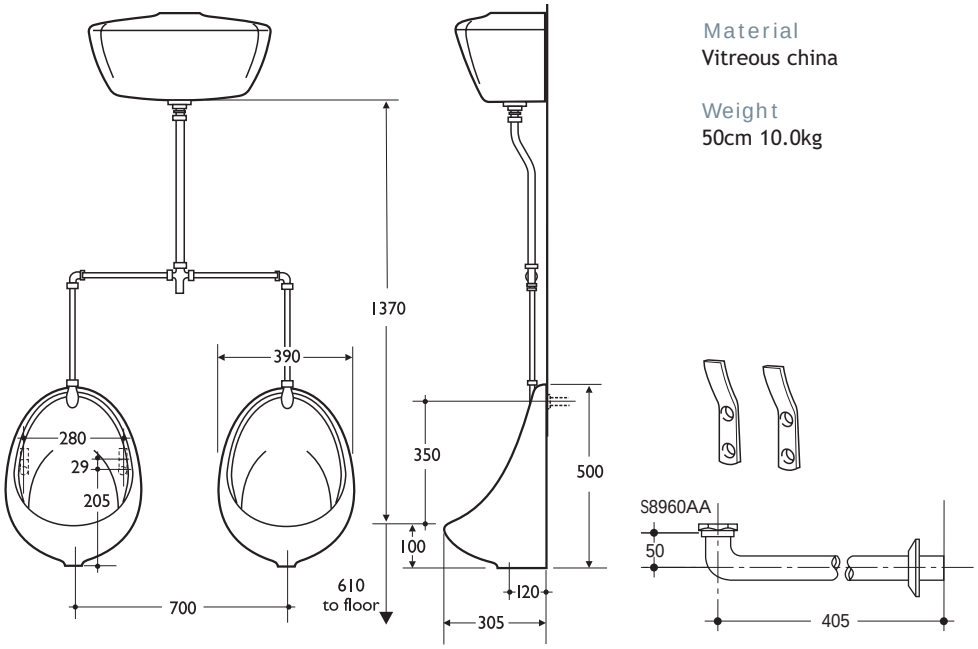

Illustrated

S610001 Sanura Vitreous China wall urinal 500mm for fixing in ranges 1, 2, 3 or 4 bowls
S6285AA top inlet spreader
S927567 concealed hangers
S885067 1½in plastics domed waste
S892567 1½in re-sealing plastics bottle trap
S897767 1½in extension to wall with flange and multi-purpose outlet
S622*MY polished stainless steel flushpipes with clips for exposed cistern
S620*01 Mura 4.5, 9 or 13.6 litres capacity auto cistern complete with auto syphon, petcock and supports

Material

Vitreous china

Weight

50cm 10.0kg

Colours

Available in White only

Standards

Vitreous china to BS 3402

Options

S8962AA 1½in CP bend to wall and wall flange (suitable for compression connections only)
S8770MY 1½in waste with stainless steel domed outlet grating

Special notes

When specifying 13.6 litre automatic cistern for range of three urinals an adaptor is required for cistern outlet, please quote SS07SB16 AA

urinals

For latest prices and delivery to your door visit MyTub Ltd - www.mytub.co.uk - info@mytub.co.uk 0844 556 1818

H.M. Prison Service

UR2

Inmates - new or old establishments, where ducts can be incorporated.

- *Wall urinal*
- *Vitreous china*



Illustrated

S610001 Sanura Vitreous China wall urinal for fixing in ranges 1, 2, 3 or 4 bowls
S6286AA back inlet spreader
S927567 concealed hangers
S885067 1½in plastics domed waste
S892567 1½in re-sealing bottle trap
S897767 1½in extension to wall withflange and multi-purpose outlet
S622*NU concealed unpolished flushpipe and clips
S621*67 Conceala auto cistern and cover, auto syphon and petcock 4.5, 9 or 13.6 litres capacity

Material

Vitreous china

Weight

50cm 10.0kg

Colours

Available in White only

Standards

Vitreous china to BS 3402

Options

S8962AA 1½in CP bend to wall and wall flange (suitable for compression connections only)
S8770MY 1½in waste with stainless steel domed outlet grating

Special notes

When specifying 13.6 litre automatic cistern for range of three urinals an adaptor is required for cistern outlet, please quote SS07SB16 AA

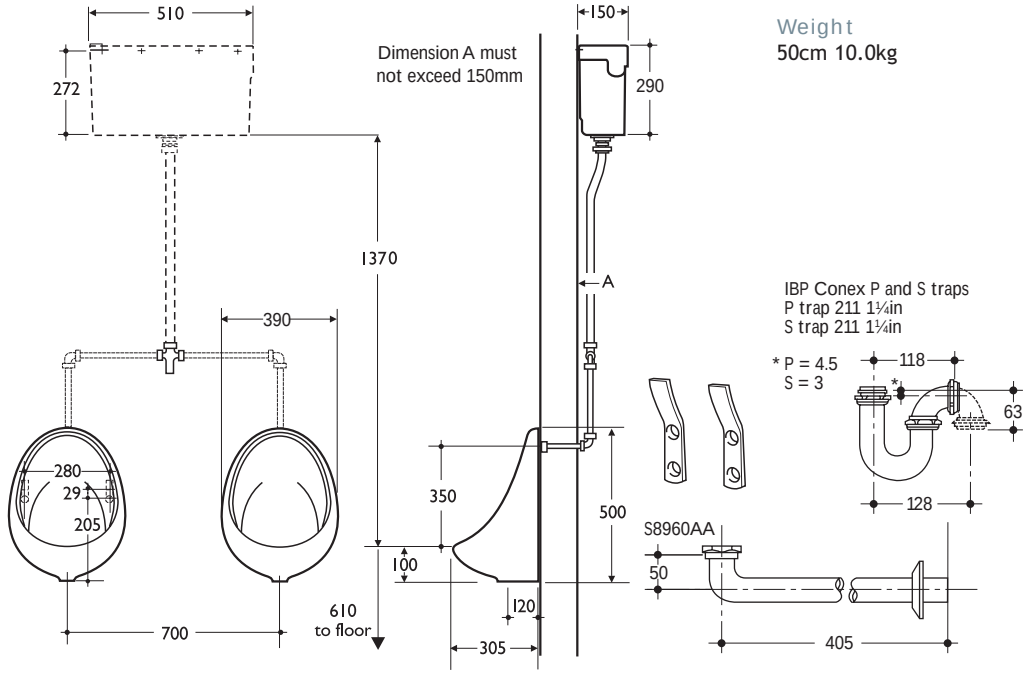

urinals

Product information
Tel: 0870 122 8822 Fax: 0870 122 8282
eMail: info@thebluebook.co.uk
www.thebluebook.co.uk

Armitage Shanks

For latest prices and delivery to your door visit MyTub Ltd - www.mytub.co.uk - info@mytub.co.uk 0844 556 1818

H.M. Prison Service

UR2 (S)

Use for Inmates - new or old establishments, where ducts can be incorporated.

Wall urinal in vitreous china for concealed plumbing.

- *Wall urinal*
- *Vitreous china*



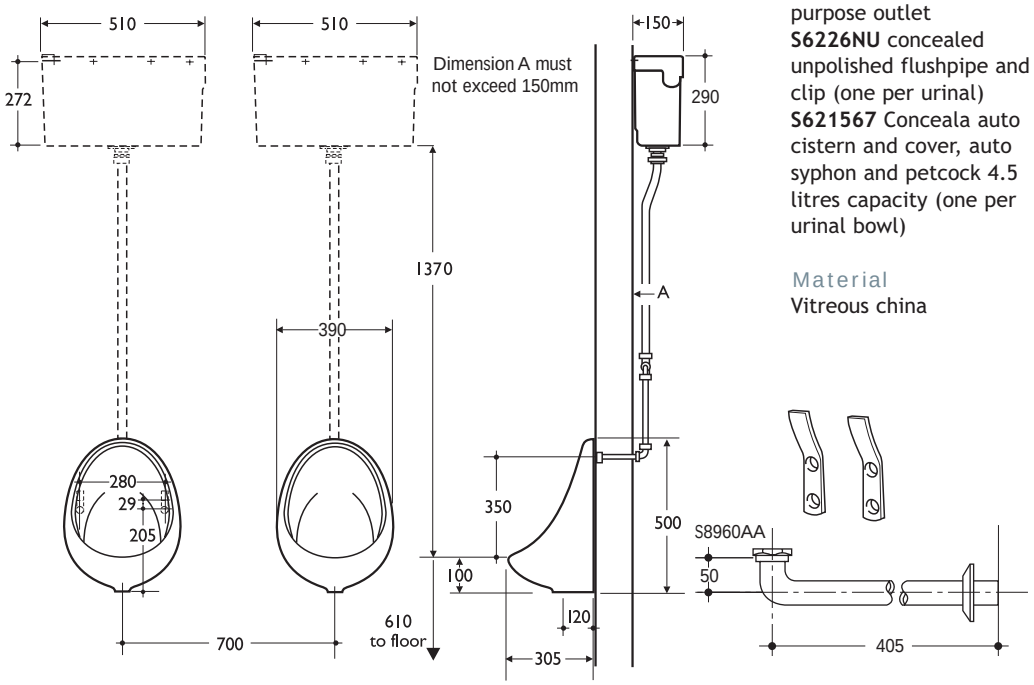

Illustrated

S610001 Sanura Vitreous China wall urinal for fixing in ranges
S6286AA back inlet spreader
S8115AA Sensorflow panel mounted urinal sensor including servicing valve, solenoid, filter, float switch and cable glands
S8100NU Sensorflow programmable control unit, heavy duty lockable box to control up to ten urinals
S927567 concealed steel hangers
S885067 1½in plastics domed waste
S892567 1½in re-sealing bottle trap
S897667 1½in extension to wall with flange and multi-purpose outlet
S6226NU concealed unpolished flushpipe and clip (one per urinal)
S621567 Conceala auto cistern and cover, auto syphon and petcock 4.5 litres capacity (one per urinal bowl)

Material

Vitreous china

Weight

50cm 10.0kg

Colours

Available in White only

Standards

Vitreous china to BS 3402

Options

S8962AA 1½in CP bend to wall and wall flange (suitable for compression connections only)
S8770MY 1½in waste with stainless steel domed outlet grating
S8147AA Sensorflow Solo single urinal sensor complete with control box for panel use

Special notes

The sensor positioned above the urinal detects usage. There is then the option of choosing the type and frequency of the flush. Frequency can be following every visit or every 30 minutes assuming the urinal has been used, ie sensor activated for a minimum of 10 seconds). Method of flush can be via a conventional automatic cistern, storage cistern or mains supply. Flushing using an automatic cistern dispenses 4.5 litres every flush. From storage or mains, a timed flow of water is selected. If urinal is unused a hygiene flush will occur once every 24 hours.

For latest prices and delivery to your door visit MyTub Ltd - www.mytub.co.uk - info@mytub.co.uk 0844 556 1818

H.M. Prison Service

UR2A

Wall urinals in vitreous china specially designed for ducted services with all service connections completely concealed.

Inmates - new or old establishments, where ducts can be incorporated (Special - as directed by specifiers).

- *Completely concealed connections*
- *Designed for ducted services*
- *Easy clean design*



Illustrated

S611001 Contour Vitreous China urinal for fixing in ranges 1, 2, 3 or 4 bowls
S6286AA back inlet spreader
S927567 concealed steel hangers
S927667 toggle bolts
S885067 1½in plastics domed waste
S8962AA 1½in bend to wall (suitable for compression connections only)
S622*NU concealed unpolished flushpipe and clips
S621*67 Conceala auto cistern and cover, auto syphon and petcock 4.5, 9 or 13.6 litres capacity

Material

Vitreous china

Weight

Urinal 14.0kg

Colours

Available in White only

Standards

Vitreous china to BS 3402

Options

S897067 1½in plastics P trap with 75mm seal, multi purpose outlet suitable for plastics and BS copper pipe
S8770MY 1½in waste with stainless steel domed outlet grating

Special notes

When specifying 13.6 litre automatic cistern for range of three urinals an adaptor is required for cistern outlet, please quote SS07SB16 AA

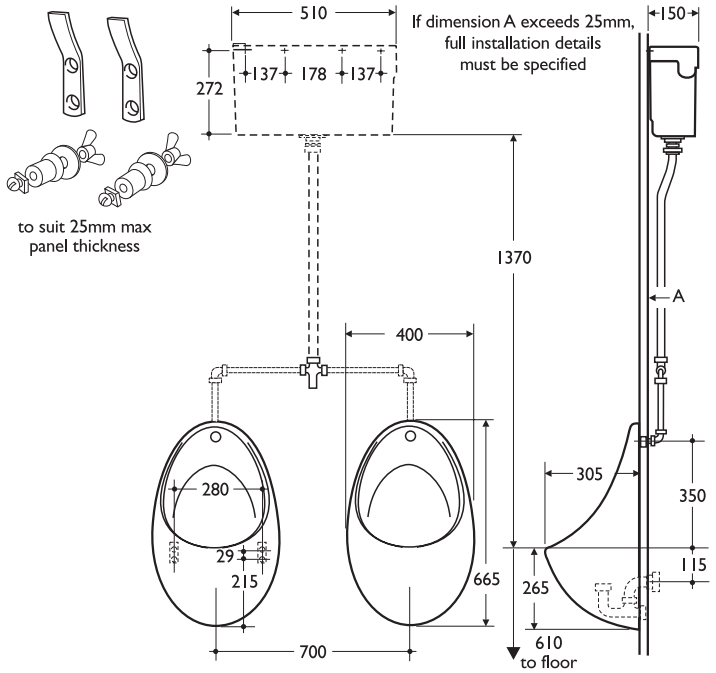

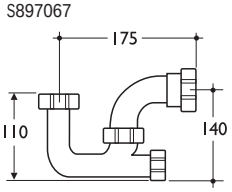

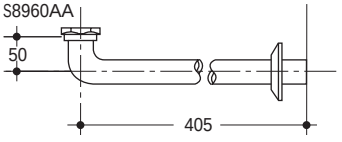

urinals

Product information
Tel: 0870 122 8822 Fax: 0870 122 8282
eMail: info@thebluebook.co.uk
www.thebluebook.co.uk

For latest prices and delivery to your door visit MyTub Ltd - www.mytub.co.uk - info@mytub.co.uk 0844 556 1818

H.M. Prison Service

UR2A (S)

Wall urinals in vitreous china specially designed for ducted services with all service connections completely concealed.

Inmates - new or old establishments, where ducts can be incorporated (Special - as directed by specifiers).

- *Completely concealed connections*
- *Designed for ducted services*
- *Easy clean design*



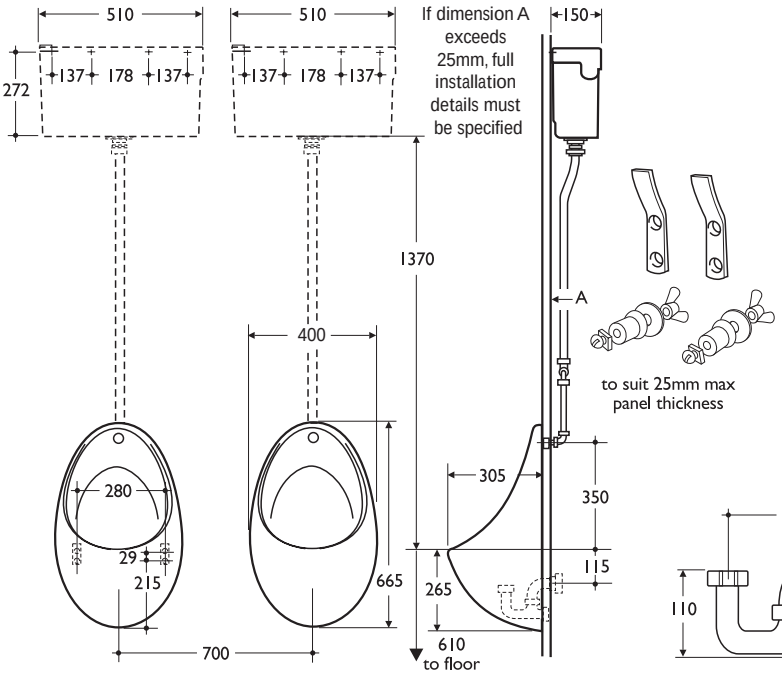

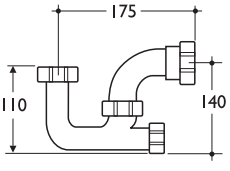

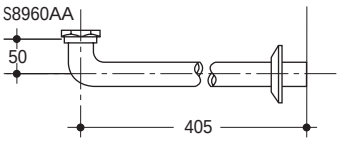

Illustrated

S611001 Contour Vitreous China urinal for fixing in ranges
S6286AA back inlet spreader
S8115AA Sensorflow panel mounted urinal sensor including servicing valve, solenoid, filter, float switch and cable glands
S8100NU Sensorflow programmable control unit, heavy duty lockable box to control up to ten urinals
S927567 concealed steel hangers
S927667 toggle bolts
S885067 1½in plastics domed waste
S8962AA 1½in bend to wall (suitable for compression connections only)
S6226NU concealed unpolished flushpipe and clip (one per urinal)
S621567 Conceala auto cistern and cover, auto syphon and petcock 4.5 litres capacity (one per urinal bowl)

Material

Vitreous china

Weight

Urinal 14.0kg

Colours

Available in White only

Standards

Vitreous china to BS 3402

Options

S897067 1½in plastics P trap with 75mm seal, multi purpose outlet suitable for plastics and BS copper pipe
S8147AA Sensorflow solo single urinal sensor complete with central box for panel use

Special notes

The sensor positioned above the urinal detects usage. There is then the option of choosing the type and frequency of the flush. Frequency can be following every visit or every 30 minutes assuming the urinal has been used, ie sensor activated for a minimum of 10 seconds). Method of flush can be via a conventional automatic cistern, storage cistern or mains supply. Flushing using an automatic cistern dispenses 4.5 litres every flush. From storage or mains, a timed flow of water is selected. If urinal is unused a hygiene flush will occur once every 24 hours.

For latest prices and delivery to your door visit MyTub Ltd - www.mytub.co.uk - info@mytub.co.uk 0844 556 1818

H.M. Prison Service

SH1

staff showers areas.

- *Fireclay*
- *Slip resistant base*



Illustrated

S589001 Modula ceramic shower tray 760x760mm, no overflow
S7815AA Nuastyle 1/2in concealed thermostatic mixing valve
S9345AA Anti ligature shower nozzle for concealed supply
S8726AA 1 1/2in unslotted strainer waste
S501001 Vitreous China fully recessed holder

Material

Fireclay

Weight

70.0kg

Colours

Available in White only

Standards

Conforms to BS 6340: Part 8

Options

As opposite but with **S7811AA** Nuastyle group remote thermostatic mixing valve to serve range of showers (instead of individual valves) Use: for Inmates

Special notes

Outside face of the shower tray adjacent to the waste is unglazed. In the interest of user safety the tray should not be sunk into the floor but be fitted as normal at floor level. It is recommended that a grab rail is fitted

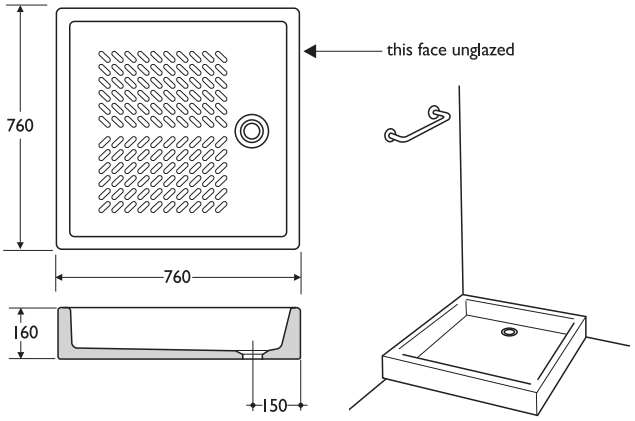

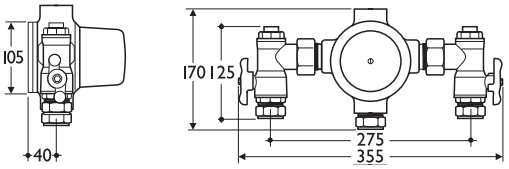

Group remote thermostatic mixing valve

1/2in concealed thermostatic mixer valve

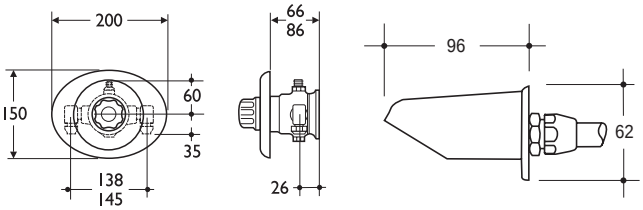

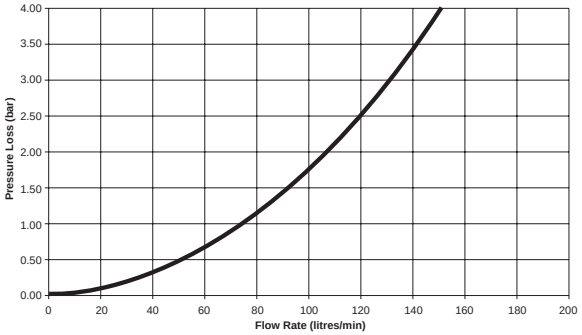

showers

Product information
Tel: 0870 122 8822 Fax: 0870 122 8282
eMail: info@thebluebook.co.uk
www.thebluebook.co.uk

Armitage Shanks

For latest prices and delivery to your door visit MyTub Ltd - www.mytub.co.uk - info@mytub.co.uk 0844 556 1818

H.M. Prison Service

SH1(A)

Staff showers areas.

- *Resin stone shower tray*
- *Top access waste*
- *Easy clean design*



Illustrated
L551001 Trevi Streamline resin stone shower tray 760x760mm, no overflow
S7815AA Nuastyle 1/2in concealed thermostatic mixing valve
S9345AA Anti ligature shower nozzle for concealed supply
L6850AA top access waste and re-sealing trap assembly
S501001 Vitreous China fully recessed holder

Material
Resin Stone

Weight
Tray 34.0kg

Colours
Available in White only

Options
As opposite but with S7811AA Nuastyle group remote thermostatic mixing valve to serve range of showers (instead of individual valves) Use: for Inmates

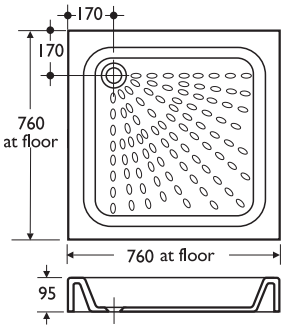

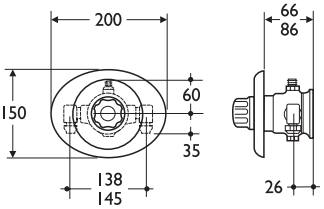

1/2in concealed thermostatic mixer valve

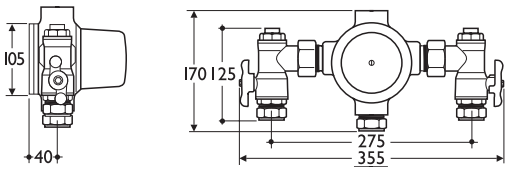

Group remote thermostatic mixing valve

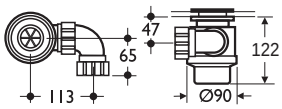

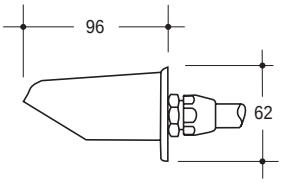

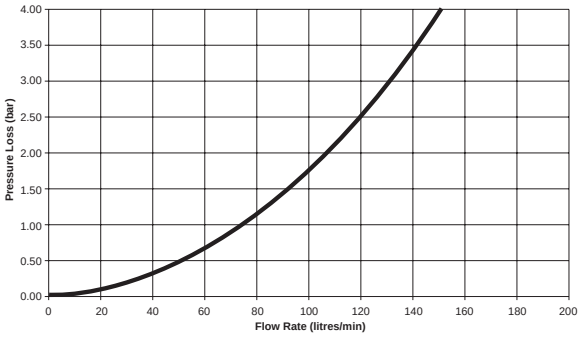

showers

For latest prices and delivery to your door visit MyTub Ltd - www.mytub.co.uk - info@mytub.co.uk 0844 556 1818

H.M. Prison Service

SH2

Inmates showers areas.

- *Push button shower valve*
- *Self-closing valve*
- *Delayed action*



Illustrated

S7861AA 1/2in concealed push shower valve with delayed action and15mm copper compression joints
S9345AA Anti ligature shower nozzle for concealed supply

Options

S7862AA Push shower valve for fitting behind wall (215mm maximum thickness)

Special notes

Designed to be supplied with pre-mixed water via **S7811AA** Nuastyle group thermostatic valve. Fixing through back plate with 2 woodscrews or with pipe brackets (not supplied)
Operating head min 0.15 bar, max 4.0 bar

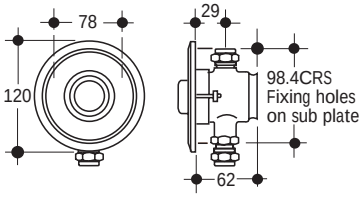

Minimum operating pressure 0.15 bar
Maximum operating pressure 6.00 bar
Maximum water temperature 70 deg c

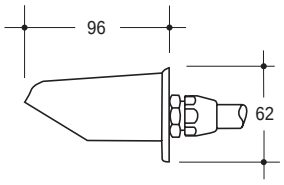

showers

Product information
Tel: 0870 122 8822 Fax: 0870 122 8282
eMail: info@thebluebook.co.uk
www.thebluebook.co.uk

Armitage Shanks

For latest prices and delivery to your door visit MyTub Ltd - www.mytub.co.uk - info@mytub.co.uk 0844 556 1818

H.M. Prison Service

SH2(S)

Inmates showers areas.

Electronic washroom system using a central control unit to manage the economic delivery of water to showers.

- *Water saving*
- *Easy to install*



Illustrated

S8111AA Sensorflow short projection shower head with panel mounted close proximity sensor, including solenoid, servicing valve, filter and cable glands
S8100NU Sensorflow programmable control unit, heavy duty lockable box to control up to ten showers

This arrangement must be supplied with pre-mixed water

Options

S8144AA Sensorflow Solo shower control for panel mounting with integral touch sensor, and short projection anti vandal showerhead with concealed inlet tail

Special notes

The remote sensor detects presence of hands and activates a run time of 1/2, 1 or 2 minutes as chosen, the run time can be interrupted during these periods by a second activation of the sensor. The control unit incorporates an over ride facility to allow sterilisation procedures to be carried out

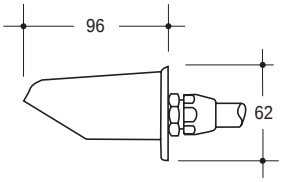

For latest prices and delivery to your door visit MyTub Ltd - www.mytub.co.uk - info@mytub.co.uk 0844 556 1818

H.M. Prison Service

SH CUB 1

Inmates shower areas.

Panels are manufactured from 13mm solid grade laminate. The edge are polished and radiused producing a panel that is safe, hygienic and exceptionally tough. Designed to withstand wet, humid conditions and the rigours of areas susceptible to vandalism.

- *For wet and humid conditions*
- *Anti vandal*
- *Suitable for tough environments*
- *Choice of fittings*
- *Trespa solid grade laminate*

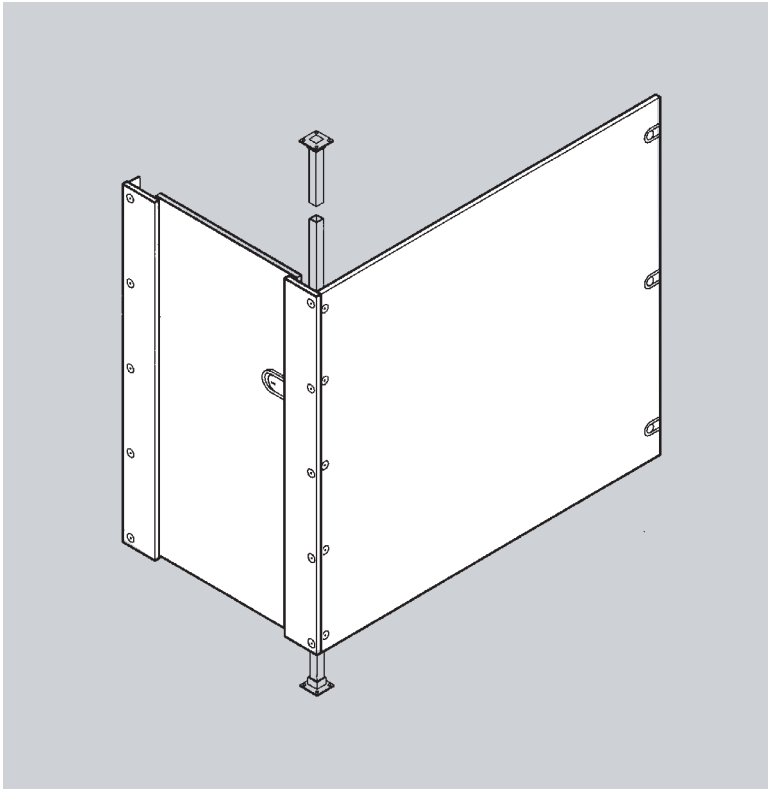

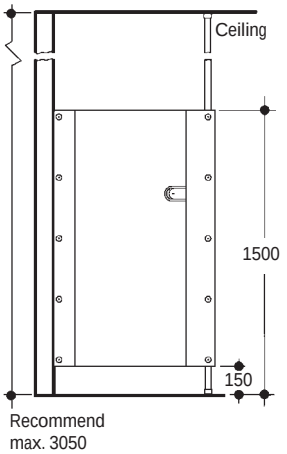

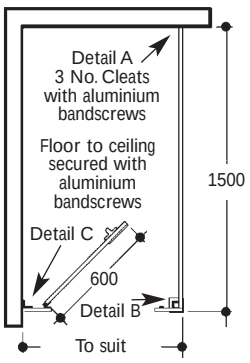

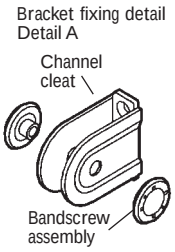

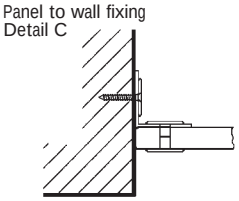

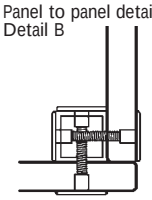

Shower cubicles

MILLENNIUM cubicles are available with decency length doors as illustrated above.

Specification

Partitions, pilasters and doors are manufactured from extremely strong 13mm solid grade laminate.
Solid laminate is suitable in wet areas, its surface is impervious to bacteria and fungi, offering high impact and total water resistance.
Colour chart available on request.

Door and partition edges are polished and radiused producing a panel that is safe, hygienic and exceptionally tough.

Fixing to wall

High strength polycarbonate cleats screwed to wall and partition with anti tamper band screws. Pilasters are secured to wall with 50 x 50mm aluminium angle and to 32 x 32mm square posts at intermediate and return positions. Anti tamper aluminium bandscrews are used to secure. This method of fixing eliminates headrail sections.

Fixing to floor and ceiling

Extruded aluminium 32mm square posts with flanges to screw to floor and ceiling to give 150mm clearance.
Floor clearance can be adjusted to suit client requirements.

Hinges

Light or dark grey powder coated adjustable hinge face fixed to door and front.

Indicator bolt

High strength polycarbonate bolts have simple locking action with emergency release facility designed to minimise damage and cost in the event of misuse and abuse.

Coat hook

Dark grey polycarbonate hook with concealed fixing.

showers

Product information
Tel: 0870 122 8822 Fax: 0870 122 8282
eMail: info@thebluebook.co.uk
www.thebluebook.co.uk

For latest prices and delivery to your door visit MyTub Ltd - www.mytub.co.uk - info@mytub.co.uk 0844 556 1818

H.M. Prison Service

SH CUB 2

Staff shower areas as directed by specifiers.

- *Heat, scratch and impact resistant*
- *Choice of fittings*
- *Three performance options*
- *Practical and efficient*

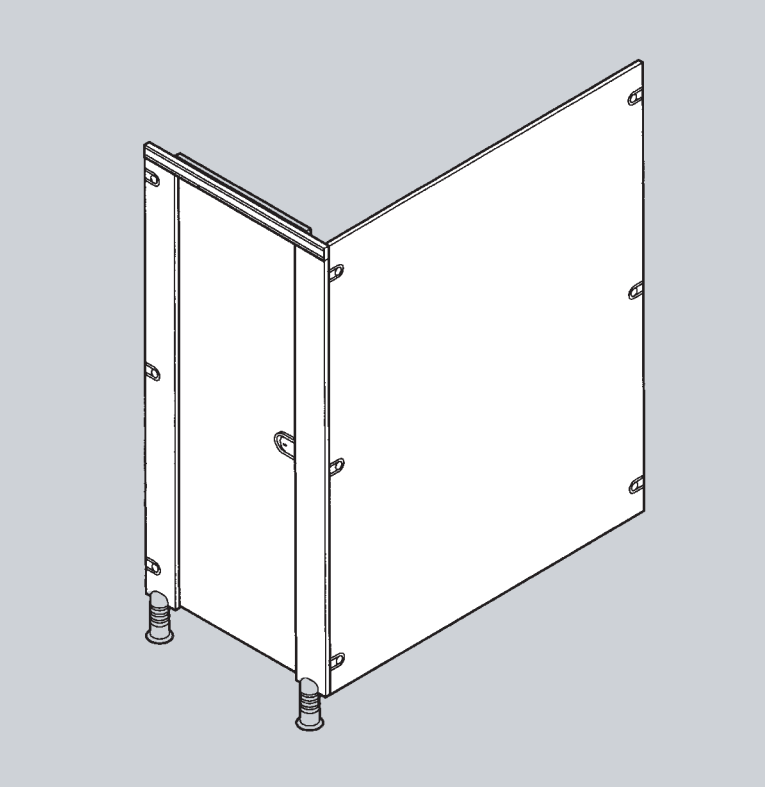

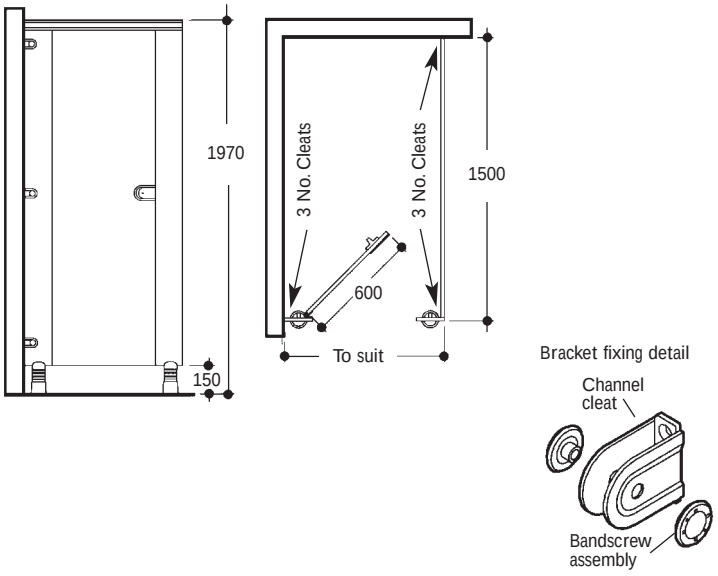

Bracket fixing detail

Shower cubicles
Millennium cubicles are available with full length doors as illustrated above.

Specification
Partitions, pilasters and doors are manufactured from extremely strong 13mm solid grade laminate. Solid laminate is suitable in wet areas, its surface is impervious to bacteria and fungi, offering high impact and total water resistance. Colour chart available on request.

Door and partition edges are polished and radiused producing a panel that is safe, hygienic and exceptionally tough.

Fixing to wall
High strength polycarbonate cleats screwed to wall and partition with anti tamper band screws.

Fixing to floor
High strength polycarbonate pedestals to give 150mm ground clearance screwed to floor and bottom of pilaster.

Headrail
Silver anodised or powder coated grey aluminium extrusion fitted over pilaster and screw fixed.

Hinges
Light or dark grey powder coated adjustable hinge face fixed to door and front.

Indicator bolt
High strength polycarbonate bolts have simple locking action with emergency release facility designed to minimise damage and cost in the event of misuse and abuse.

Coat hook
Dark grey polycarbonate hook with concealed fixing.

showers

Armitage Shanks
Product information
Tel: 0870 122 8822 Fax: 0870 122 8282
eMail: info@thebluebook.co.uk
www.thebluebook.co.uk

P : 1 : 40

CI/SfB 376 (74) Uniclass L721
Jan 2003

For latest prices and delivery to your door visit MyTub Ltd - www.mytub.co.uk - info@mytub.co.uk 0844 556 1818

H.M. Prison Service

S1

As directed by specifiers.

Cleaners' sink in fireclay 46cm x 38cm.

- *Fireclay*
- *Hardwood front pad*
- *Bucket grating*



Illustrated

S591501 Birch Cleaners sink in fireclay 455x380x205mm with 150mm high back and hardwood pad, no overflow, with fitted stainless steel bucket grating
S7110AA Nuastyle 2 ½in inclined bib taps
S8331AA ½in wall mounts for exposed plumbing
S8726AA 1½in unslotted strainer waste
S892567 1½in plastics re-sealing bottle trap
S8977671½in plastics extension piece to wall with flange and multi-purpose outlet

Material

Fireclay

Weight

46cm 38.0kg

Colours

Available in White only

Options

S9233 Stainless steel legs and screw to wall aluminium alloy bearers.

Special notes

Legs can be reduced in height on site

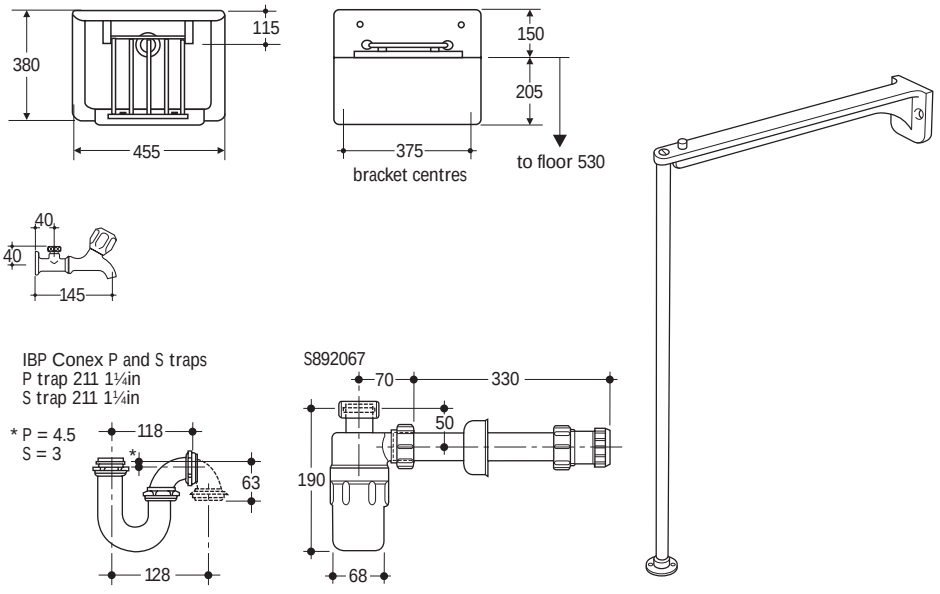

sinks

Product information
Tel: 0870 122 8822 Fax: 0870 122 8282
eMail: info@thebluebook.co.uk
www.thebluebook.co.uk

Armitage Shanks

For latest prices and delivery to your door visit MyTub Ltd - www.mytub.co.uk - info@mytub.co.uk 0844 556 1818

H.M. Prison Service

S2

As directed by specifiers.

Heavy duty sink in fireclay with weir overflow.

Sink is reversible and conforms to BS 1206:1974.

- *Three sizes*
- *Fireclay*
- *Weir overflow*



Illustrated

S580501 Belfast sink 61cm x 46cm x 26cm
S7110AA Nuastyle 2 ½in inclined bib taps
S8331 ½in wall mounts for exposed plumbing
S8742AA 1½in anti theft waste with captive plug
S892567 1½in plastics re-sealing bottle trap
S897767 1½in plastics extension piece to wall with flange and multipurpose outlet
S9250 stainless steel legs and bearers

Material

Fireclay

Weight

Sink 76cm 63.0kg
61cm 49.0kg
46cm 25.0kg

Colours

Available in White only

Standards

Sinks conform to BS 1206: 1974

Options

S5800 Belfast sink 46 cm x 38cm x 21cm
S9251 legs and bearers
S5811 Belfast sink 76cm x 46cm x 26cm

Special notes

Stainless steel leg can be reduced in height on site

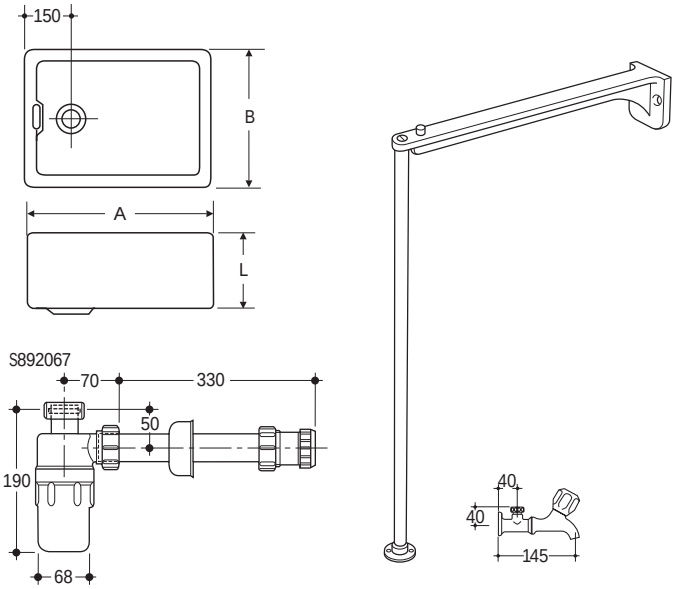

Catalogue numbers, sizes and supports	A B L	Legs and Bearers
S580001	46x38x21cm	S9251MY
S580501	61x46x26cm	S9250MY
S581101	76x46x26cm	S9250MY

sinks

For latest prices and delivery to your door visit MyTub Ltd - www.mytub.co.uk - info@mytub.co.uk 0844 556 1818

H.M. Prison Service

S3

Inmates sanitary annexes.

- *Slop sink*
- *Manufactured in fireclay*
- *Bib taps*



Illustrated

S657401 Fane fireclay slop sink, undrilled with P trap outlet, fitted stainless steel bucket grating
S395501 Clena cistern 6 litre capacity with Freeflo plastics syphon fittings and ½in Microvalve HP/LP ballvalve, side supply, internal overflow, chrome plated chain and rubber pull and support brackets
S459067 9 litre conversion set
S465567 plastics flushpipe 69cm
S450567 Simpla inlet connector
S7110AA Nuastyle ½in inclined bib taps
S8346AA 75mm extensions
S8331AA ½in wall mounts for exposed plumbing
S9239MY stainless steel legs with aluminium alloy bearers

Material

Fireclay

Weight

Sink 58.0kg
Cistern 20.0kg

Colours

Available in White only

Options

S657501 Fane fireclay slop sink, undrilled with S trap outlet, fitted stainless steel bucket grating
S395601 Clena high level cistern with screw down cover

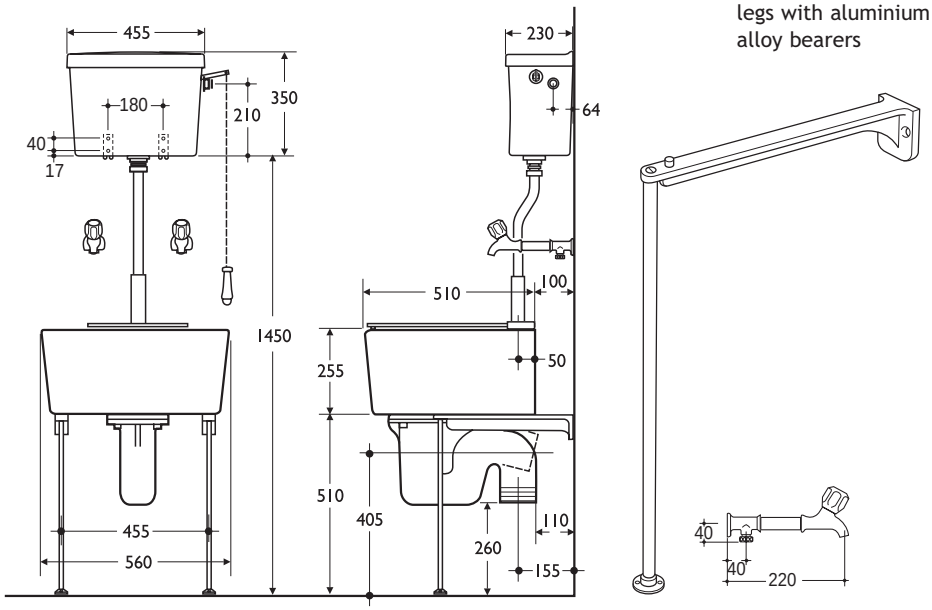

sinks

Product information
Tel: 0870 122 8822 Fax: 0870 122 8282
eMail: info@thebluebook.co.uk
www.thebluebook.co.uk

Armitage Shanks

For latest prices and delivery to your door visit MyTub Ltd - www.mytub.co.uk - info@mytub.co.uk 0844 556 1818

H.M. Prison Service

S4

Inmates sanitary annexes.

- *Slop sink*
- *Manufactured in fireclay*
- *Self closing valve*



Illustrated

S657401 Fane fireclay slop sink undrilled with P trap outlet, fitted stainless steel bucket grating
S7238AA Avon non-concussive valve with discharge nozzle
S373467 Conceala 2 high level duct cistern and cover 6 litres capacity, Freeflo plastics syphon fittings with ½in Microvalve HP/LP ballvalve, side supply and internal overflow
S459067 9 litre conversion kit
S4454AA push button mechanism for above cistern
S465067 plastic flushpipe
S9239MY stainless steel legs and aluminium alloy bearers

Material

Fireclay

Weight

Sink 58.0kg
Cistern 20.0kg

Colours

Available in White only

Options

S657501 Fane fireclay slop sink as above but S trap
S7110AA Nuastyle 2½in inclined bib taps
S8346AA 75mm extensions
S8331AA ½in wall mounts for exposed plumbing
S4455AA push button for wall thickness up to 400mm maximum

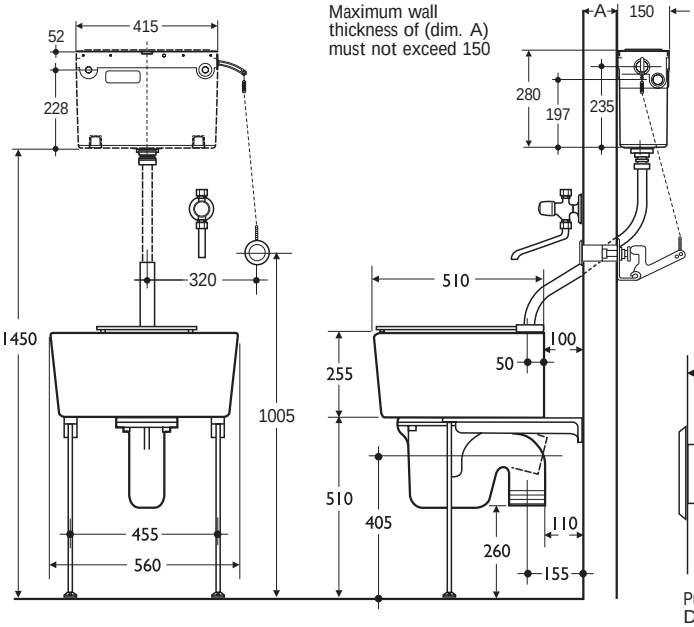

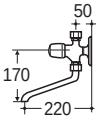

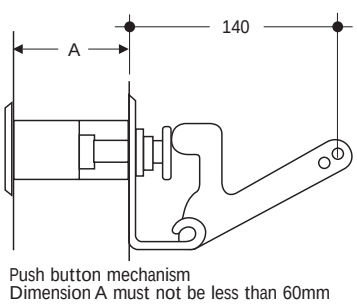

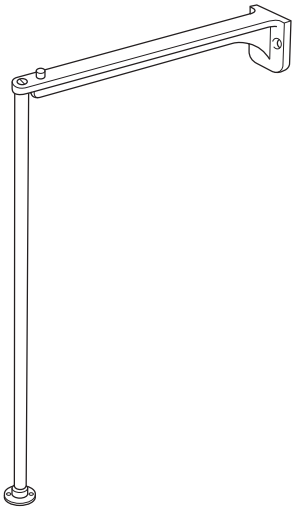

sinks

For latest prices and delivery to your door visit MyTub Ltd - www.mytub.co.uk - info@mytub.co.uk 0844 556 1818

H.M. Prison Service

B1

Inmates reception areas as directed by specifiers.

Heavy gauge steel 170cm x 70cm

- *Heavy duty steel bath*
- *Slip resistant base*
- *30 year guarantee*



Illustrated

S186501 Nisa Heavy gauge pressed steel bath with 2 tap holes, size 1700x700mm
S7107AA Nuastyle 3/4in pillar taps
S8830AA 1 1/2in combined chain and overflow
S897067 1 1/2in plastic P trap with 75mm seal, multi-purpose outlet

Material

2.9mm heavy gauge porcelain enamelled supersteel

Capacity

31 gallons/140 litres (to overflow)

Weight

Bath 52.0kg

Colours

Available in White only

Special notes

Supported on steel cradle with adjustable feet

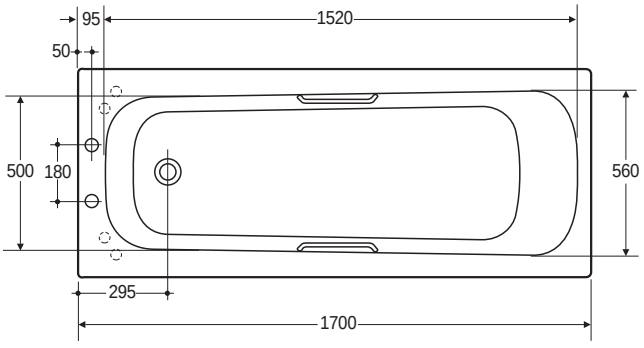

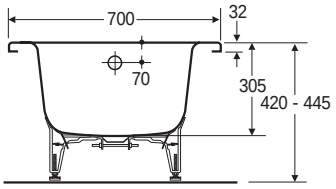

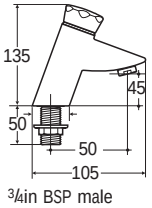

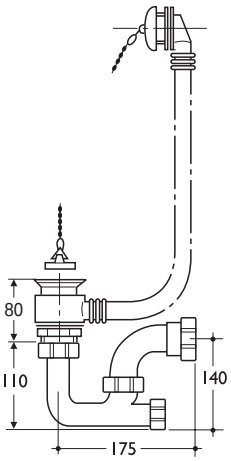

CI/SfB 376 (74) Jan 2003 Uniclass L721

Product information
Tel: 0870 122 8822 Fax: 0870 122 8282
eMail: info@thebluebook.co.uk
www.thebluebook.co.uk

Armitage Shanks

For latest prices and delivery to your door visit MyTub Ltd - www.mytub.co.uk - info@mytub.co.uk 0844 556 1818

special care

H.M. Prison Service

DIS 1

Disabled areas (Visitors).

Specially designed with RADAR and JMU (Access Partnership), this Doc M pack has many safety features.

TMV3 approved thermostatic valve to help prevent scalding.

Wheelchair WC compartment to Part M3 of the Buildings Regulations 1991 (as amended 1999)

- *LANTAC approved*
- *Left or right hand corners*
- *Delivered complete in one box*
- *Optional blue grab rails and seat*



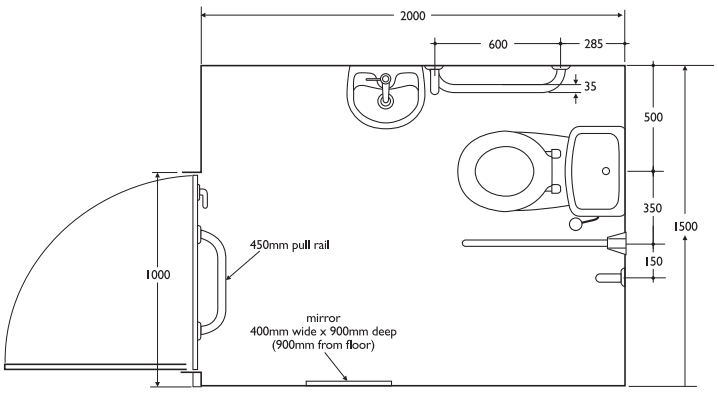

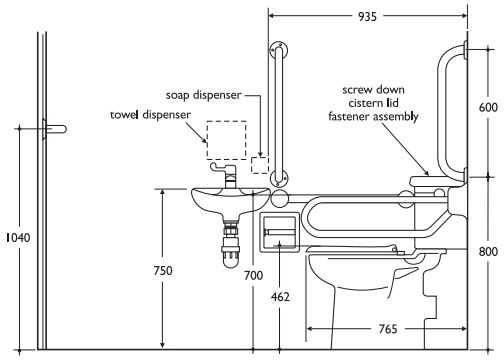

Illustrated
S687101 (00DM001WW)
Doc M plus pack with white grab rails, seat and hinged arm support

Material
Vitreous china

Weight
70.0kg

Colours
Available in White only

Standards
Vitreous china to BS 3402
LANTAC approval number NR111-5-46

Options
S687201 (00DM002WW)
Doc M pack with blue easy grip grab rails and hinged arm support, blue seat

Associated products
Panekta connectors
S4305 (9013000) converts to P trap
S4300 (9014000) converts to turned P or S trap

Special notes
Left hand corner arrangement illustrated. For right hand corner arrangement spatula lever should be fitted on left of cistern

For latest prices and delivery to your door visit MyTub Ltd - www.mytub.co.uk - info@mytub.co.uk 0844 556 1818

H.M. Prison Service

DIS 1A

Disabled areas (Visitors).

WC assemblies with spacer box unit and concealed cisterns. Suitable for wheelchair use.

Wheelchair WC compartment to Part M3 of the Buildings Regulations 1991 (as amended 1999)

- *LANTAC approved*
- *Left or right hand corners*
- *Delivered complete in one box*



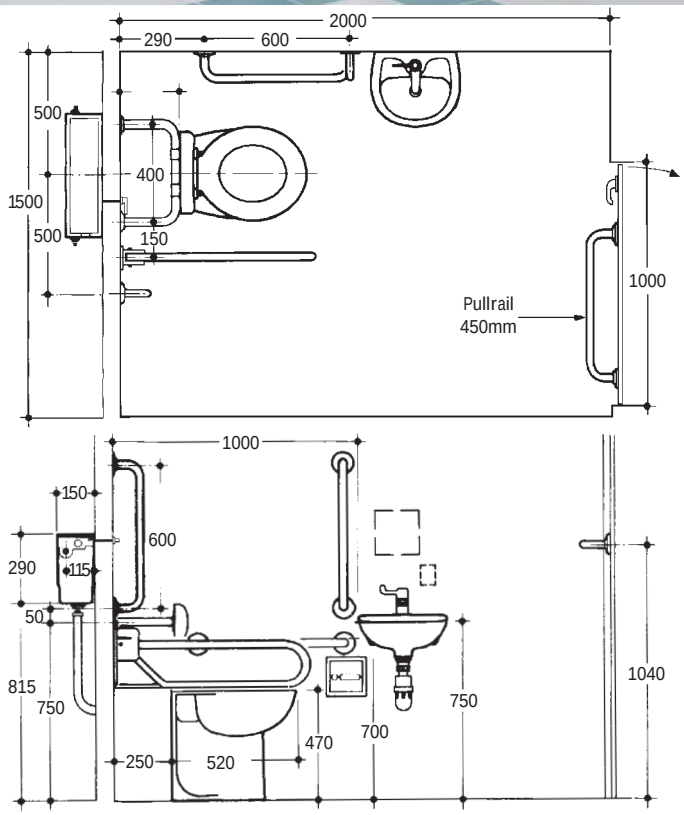

Illustrated
S687801 DocM Standard pack with concealed cistern, white grab rails, seat and hinged arm support

Material
Vitreous china

Weight
WC 19.5kg

Colours
Available in White only

Standards
Vitreous china to BS 3402
LANTAC approval number NR58-5-46

Associated products
Panekta connectors
S4305 (9013000) converts to P trap
S4300 (9014000) converts to turned P or S trap

Special notes
The installation shows a right hand corner arrangement.
For left hand corner arrangement fit lever accordingly

Product information
Tel: 0870 122 8822 Fax: 0870 122 8282
eMail: info@thebluebook.co.uk
www.thebluebook.co.uk

For latest prices and delivery to your door visit MyTub Ltd - www.mytub.co.uk - info@mytub.co.uk 0844 556 1818

Armitage Shanks pursues a policy of continuing improvement in design and performance of its products.
The right is therefore reserved to vary specifications without notice.
A division of American Standard Plumbing (UK) Ltd. P321 1/03

For latest prices and delivery to your door visit MyTub Ltd - www.mytub.co.uk - info@mytub.co.uk 0844 556 1818