11in

GARDEN OASIS
LIVING OUTDOORS

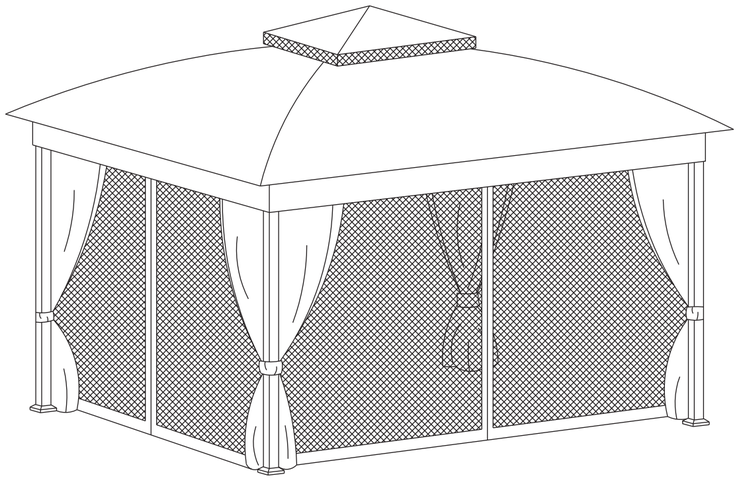

USE AND CARE GUIDE

Replacement Curtain for Privacy Gazebo

Caution: Carefully Read Instructions and Procedures for Safe Operation
Product Code: D71 M56679
UPC Code: 841057143032

Date of Purchase: ____/ ____/ ____

sears

Please refer to part numbers when reordering

For questions or comments about product:
Email: sears@sunjoygroup.com or Call toll-free: 1-866-578-6569

Made in / Hecho en CHINA
Distributed by Sears, Roebuck and Co., Hoffman Estates, IL 60179

See our extensive assortment of outdoor living products
on-line at www.sears.com and www.kmart.com

17in

Assembly Instructions

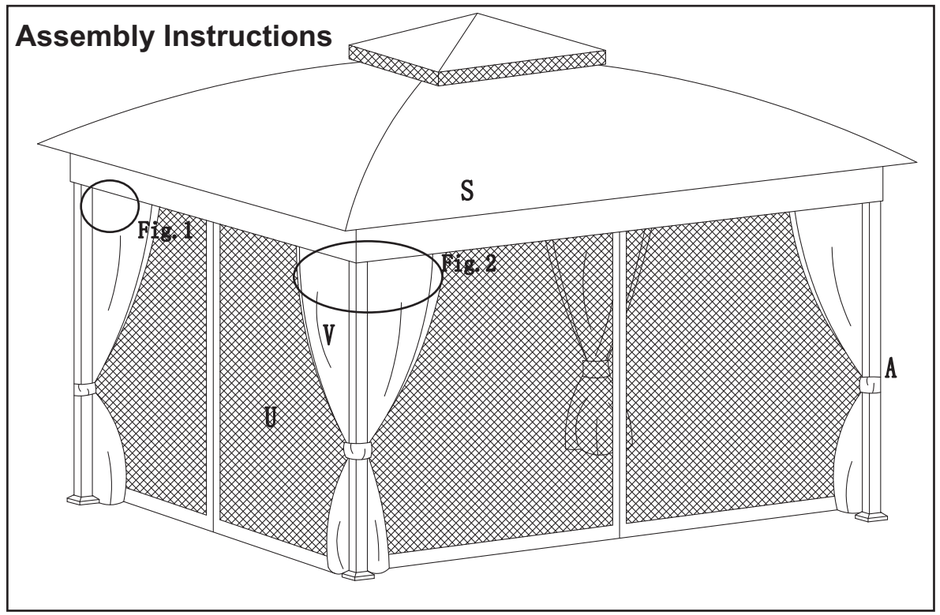

Fig.1: Fix plastic ring (GG) to curtain (V), 13 plastic rings for each curtain.

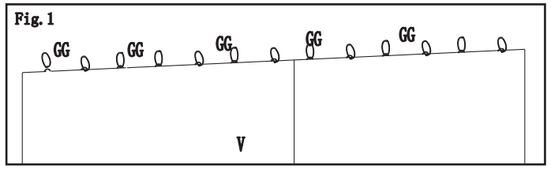

Fig.2: Fix curtain (V) to the round tube under the beam through plastic ring (GG). Note: Curtain (V) should be at back of the poles as shown in the illustration, fix the band of the curtain to the pole. Six plastic rings are fixed to the short tubes, seven plastic rings are fixed to the long tubes.

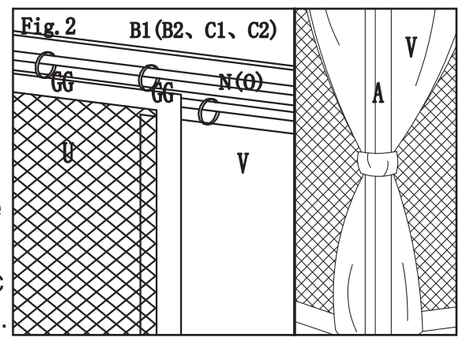

Thank you for your purchase!

Thank you for your purchase!
We are pleased that you have chosen Sears for your outdoor gazebo replacement curtain purchase. We hope that you enjoy the unmatched quality, comfort, and style of your new patio item. Every piece is meticulously considered all the way down to the smallest details, exclusively for you, by our world class design team. We know you have a choice when it comes to your patio needs, so from our team to yours, thank you for letting us be a part of your outdoors.

Table of Contents

Table of Contents 1
Safety Information 1
Care and Maintenance 1
Package Contents 2
Assembly Instructions 3-4

Safety Information

- It is a replacement curtain for New Privacy Gazebo!
- When assembling and using this product, basic safety precautions should always be followed to reduce the risk of personal injury and damage to equipment.
- Please read all instructions before assembly and use.
- Keep all children and pets away from assembly area.
- KEEP ALL FLAME AND HEAT SOURCES AWAY FROM THIS TENT FABRIC.

Care and Maintenance

Wash with a mild solution of soap and water; rinse thoroughly. Dry completely. Do not use bleach or solvents. Store curtain indoors during winter months to prevent collapse

Package Contents

Parts List

Description	Part #	Label	Qty	Image
Curtain	GZ0659XXX22	V	1	

Hardware

Description	Part #	Label	Qty
Ring	R40U	GG	52

Image

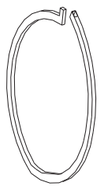

GG

Assembly Instructions

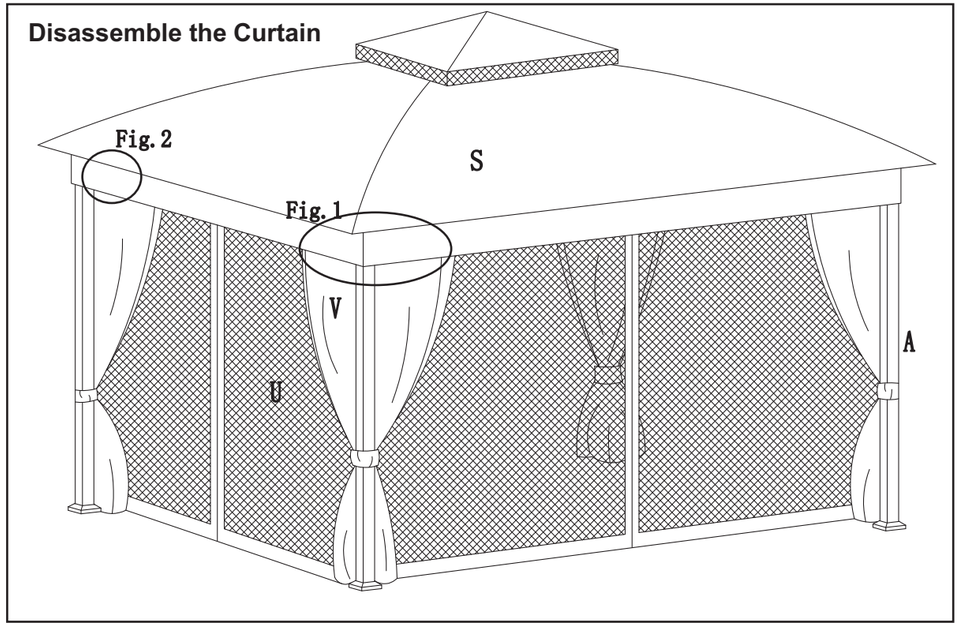

Fig.1: Take down curtain (V) from the round tube under the beam.

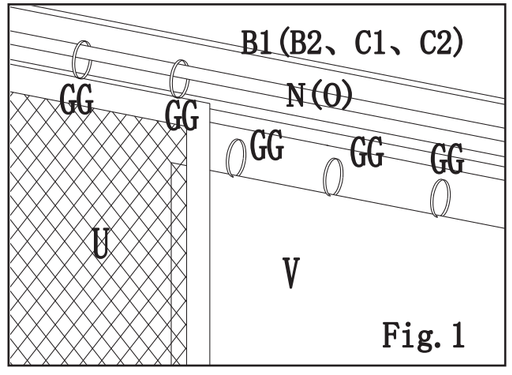

Fig.2: Take down all the plastic ring (GG) from the curtain (V).

