Inductive proximity switch
IKOH 100.17 G S4

- Housing 170 x 170 x 67 mm
- Rated operating distance (S_n) 100 mm
- DC 2 wire normally open
- Plug S4 (M12x1 A)

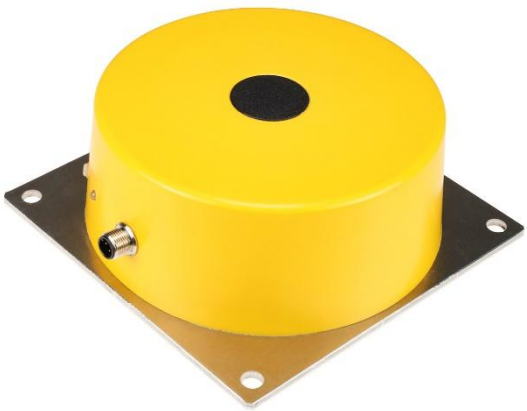

Product Characteristics

Type	**IKOH 100.17 G S4**
Connection	**Art.-No.**
Plug S4 (M12x1 A)	2057N
Application	Non-contact detection of metallic objects

Technical Data

Rated operating distance (S_n)	100 mm
Target steel St37, 1 mm thick	300 x 300 mm
Operating distance adjustable	yes
Switching hysteresis (H)	1 - 15 %
Location at metal	non flush
Supply voltage (U_B)	24 V DC
Ripple voltage	max. 15 %
Output	normally open
Continuous current	0,5 - 150 mA
Short-circuit protection	yes, pulsing
Voltage drop (U_d)	< 4,5 V
Operating frequency (f)	50 Hz
Ambient temperature	-25 ... +70 °C
Protection class	IP 67
Housing material	plastic / mounting plate aluminum
Functional display	LED

Connection

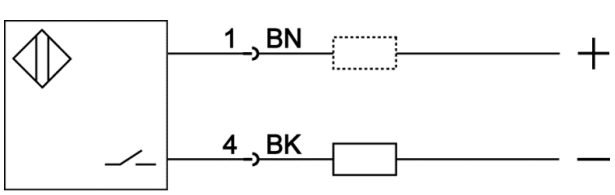

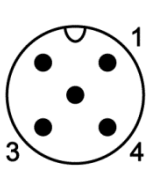

Proxitron GmbH – 25335 Elmshorn – Germany – Tel. +49 4121 2621-0 – www.proxitron.de – info@proxitron.de

Dimension (mm)

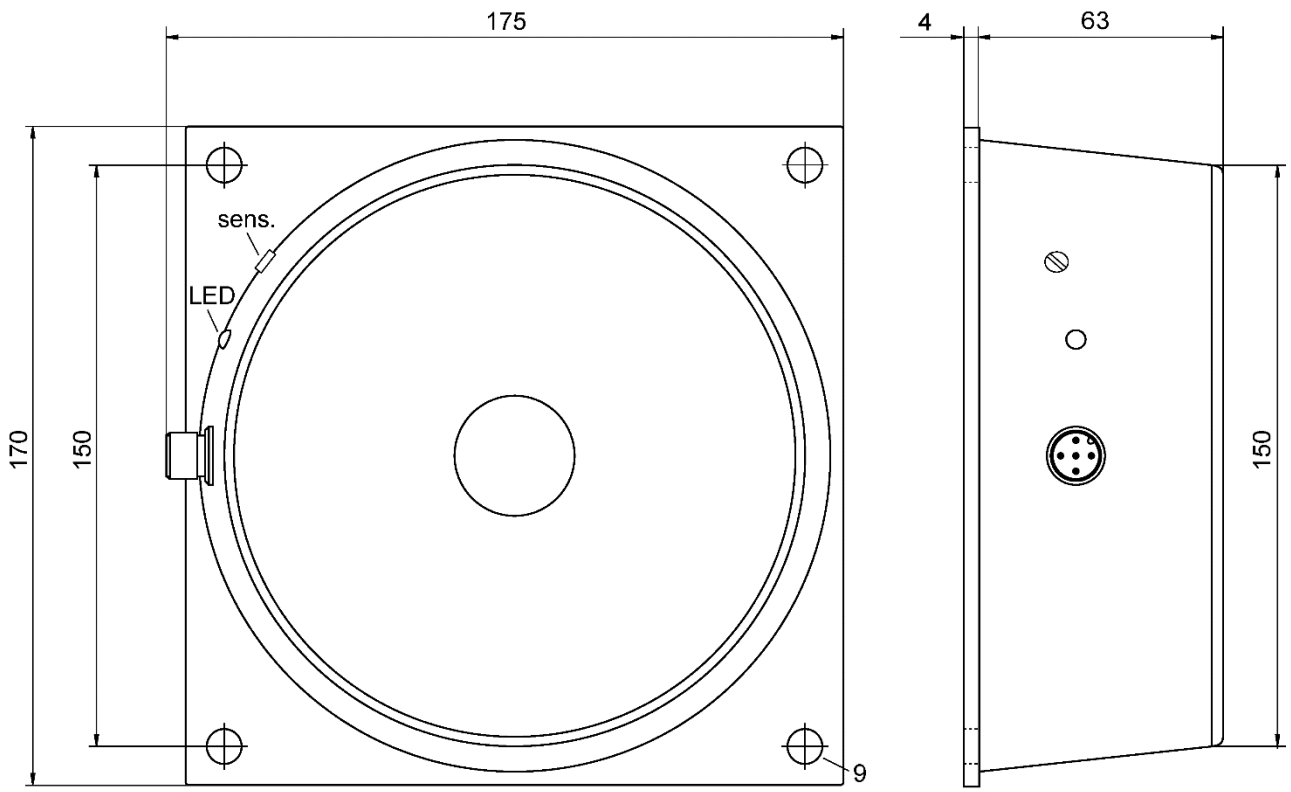

Accessories (in scope of supply)

	Type	Art.-No.
-	-	-

Accessories (**not** in scope of supply)

	Type	Art.-No.
Female plug S4 (M12 x 1 A), straight, can be assembled, 4 wire	ST040G	9842D
Female plug S4 (M12 x 1 A), angular, can be assembled, 4 wire	ST040	9841A
Connection cable 2 m, 3 wire, with straight female plug S4 (M12 x 1 A)	ST043/3-2	9850I
Connection cable 5 m, 3 wire, with straight female plug S4 (M12 x 1 A)	ST043/3-5	9850X
Connection cable 10 m, 3 wire, with straight female plug S4 (M12 x 1 A)	ST043/3-10	9850Y
Connection cable 2 m, 3 wire, with angular female plug S4 (M12 x 1 A)	ST041/3-2	9851F
Connection cable 5 m, 3 wire, with angular female plug S4 (M12 x 1 A)	ST041/3-5	9851R

Further information

	Document
Operating manual	BDA_IK_D_E