KraussMaffei

Pioneering Plastics

MIXING AND METERING MACHINES

OUTSTANDING PRODUCT QUALITY IN PUR PROCESSING

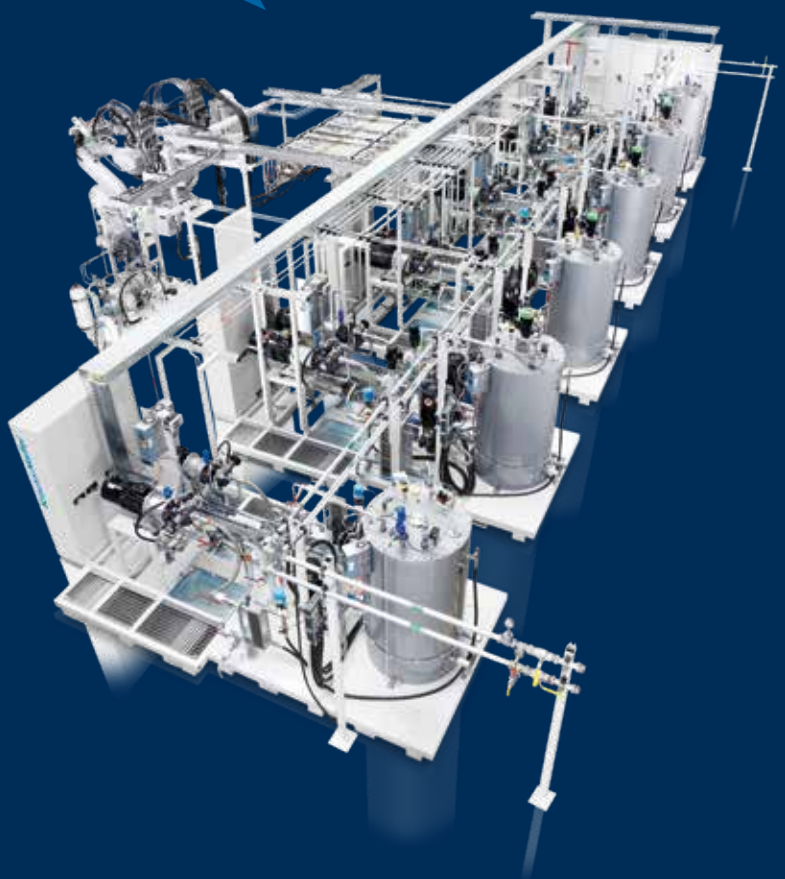

FACTS & FIGURES

AREA OF APPLICATION FOR **METERING MACHINES**



Automotive



Automotive



Medical technology



Automotive



Commercial vehicles



Major appliances

OUTSTANDING PRODUCT QUALITY
IN PUR PROCESSING

The extensive range of mixing and metering machines from KraussMaffei is suitable for all application areas in PUR processing. The modular design and flexible configuration of the machines allows them to be optimally tailored to customer-specific requirements. This means KraussMaffei offers the optimum solution for every production requirement. This includes being easy to operate and maintain.

Your advantages at a glance:

- Innovative machine engineering for high process reliability
- Precise control engineering for outstanding component quality
- Excellent price-performance ratio
- Flexible machine configuration
- Easy to operate and maintain

TAKE A TOUR
OF THE RIMSTAR SERIES



Proven tank design
- Double-walled agitator tanks
- Filling level sensors
- Integrated temperature control concept

Automatic air dryer
- Complete processing system

Plate heat exchanger on machine frame
- For all process technology applications
- Short line lengths
- Optimized temperature, pressure and process control
- Higher component quality and lower scrap

Suction line with edge-type filter
- Optionally with motorized drive unit

Mixing head hydraulics
- Fully integrated with feed pump, pressure accumulator, high-pressure filter, return flow filter, minimum fill-level sensor and oil cooler

(Image contains optional equipment)

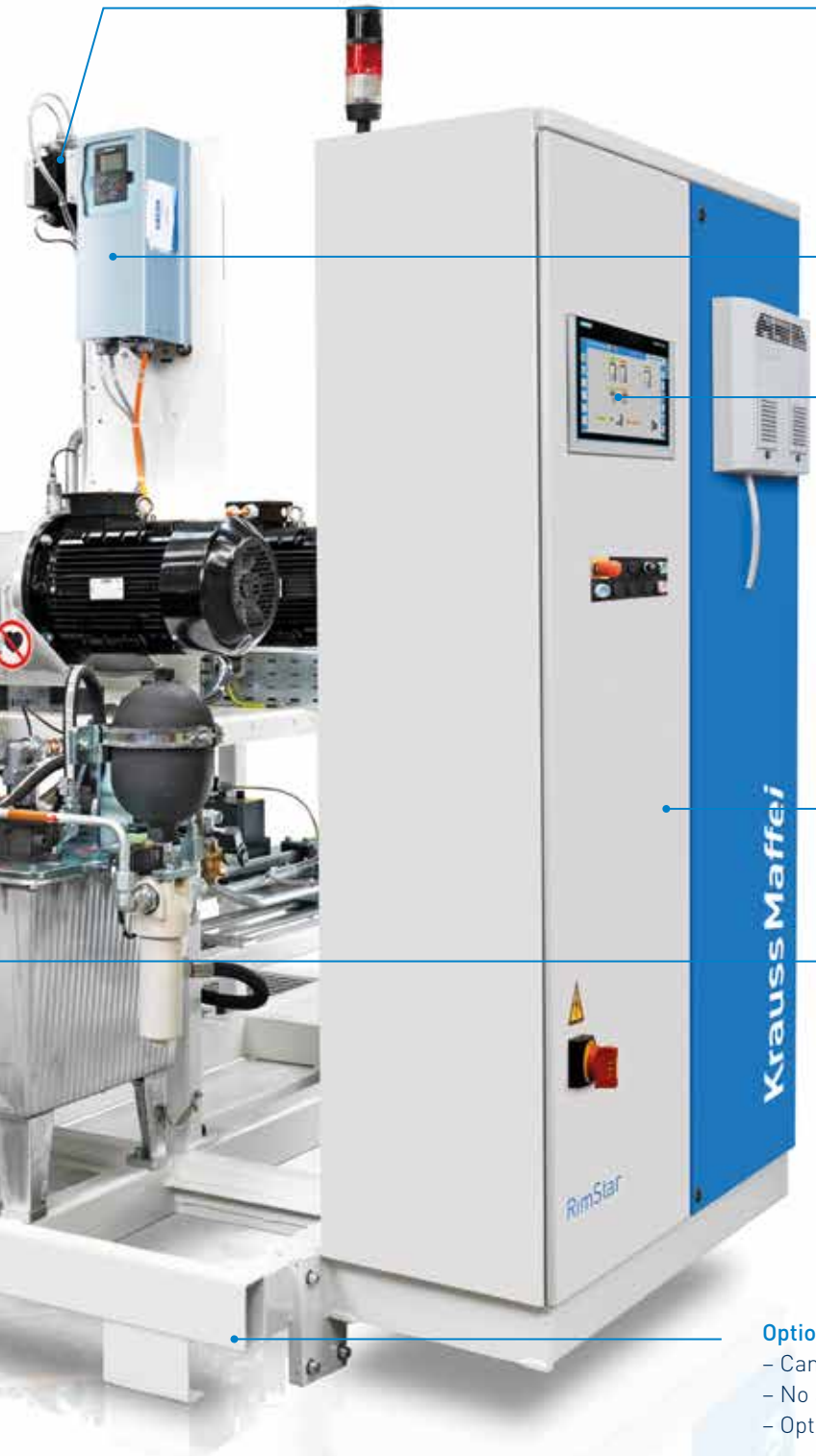

Easy-to-read displays
– Easy to operate, service and maintain

Frequency converter for metering pump drive
– Optional for agitator drives

HMI interface

Switching cabinet with Siemens control unit

KraussMaffei high-pressure metering pump (axial piston pump) with handwheel adjustment
– Pump and motor carrier with magnetic coupling

Optional outrigger
– Can be mounted on the machine base
– No additional costs thanks to external piping
– Option: robot for automated mixing head handling

PRODUCTIVE, FLEXIBLE, STABLE IN VALUE **NOW AND IN THE FUTURE**

Our machine concepts offer you maximum flexibility so you can respond to your industry's latest demands at any time. This flexibility makes it possible to build intelligent machine components that can be easily added to and combined. Attention to detail in design characteristics is the basis for quality and productivity.

Flexibility now
- Our modular frame concept allows us to create flexible solutions to suit your space requirements
- Switching cabinet can either be permanently mounted on the frame or variably positioned

Flexibility in the future
- Our machine concept offers you multiple options for adding to and upgrading machine components in response to changes in production requirements

Outstanding component quality and minimal scrap
Short, rheologically optimized supply lines between the machine components result in lower pressure losses, more precise temperature control and optimized control engineering. This increases process reliability and the quality of your parts.

Proven tank design
Double-walled agitator tank with connection option for nucleation unit, compact on base frame, cost-effective, efficient temperature control concepts adapted to the process.

Central water supply
Installed on-site to lower installation costs.



Multi-component metering machine

PREMIUM QUALITY WITH LOW INVESTMENT COSTS
EcoStar Compact

The EcoStar Compact series from KraussMaffei contains premium-quality PUR metering machines with low investment costs.

As a laboratory as well as a production machine, the series covers a wide range of solutions for producing PUR components. Simple control and operation at the Siemens touch panel, a metering pump with optional closed-loop technology for continuous optimum flow rate, and self-cleaning linear and deflection mixing heads for homogeneous mixing of reaction components ensure efficient production with outstanding component quality.

Standard specification
- Double-walled feed hoppers
- Agitator for polyol
- Level monitoring (optional)
- Suction line with screen pack filter
- High-pressure metering pumps and axial piston pump from KraussMaffei in-house production
- Electrical control system with Siemens S7
- Hydraulic unit for mixing-head control
- Mixing head with hose pack
- Compact machine base frame

Optional additional equipment
- Tank heating with heating cartridges
- Metering pump drive with flow measurement and frequency converter (closed loop)
- Magnetic coupling on the metering pumps
- Edge filter in the suction line
- High-pressure filter
- Heat exchanger in return line
- Low-pressure bypass valves
- Barrel pumps
- Mixing head outrigger (radius 2.2 m and 3 m) on the base frame
- Compressor cooling unit

YOUR BENEFITS:
- Low investment costs
- Short delivery times
- Attractive price-performance ratio
- Reliable process control
- Premium quality components
- High component quality
- Additional function packages available as options



The EcoStar Compact is characterized by an attractive price-performance ratio.

RimStar Smart: Tailored options ensure efficiency in event of manual foaming and in series production



THE RIMSTAR SERIES
HIGH-END TECHNOLOGY FOR STANDARD AND SPECIAL TASKS

In the area of PUR processing, RimStar is synonymous with process reliability, component quality, and flexibility in plant configuration. Depending on your needs, select the standardized RimStar Smart or RimStar solutions. Alternatively, you can assemble your ideal mixing and metering machine using modules of the customized RimStar Plus for your special requirements.

Future-proof investment

The RimStar is successful around the world. To ensure it stays this way, it is also fit for digital production environments. With requirements-based equipment packages, you take advantage of all the benefits.

RimStar Smart – A solid basis to satisfy high demands

The RimStar Smart knows your daily challenges. It reduces the familiarization time, because its operation is intuitive. It can be operated precisely where you want it, because the robust glass touch panel is mobile. An operating panel on the mixing head provides additional support in event of manual foaming. The RimStar Smart also helps solve space problems. Taking up a floor surface area of 4.8 m², it is of extremely compact design.

The optional closed-loop control of the output rate guarantees optimum component quality. If required, a "smart" interface connects plant technology and automation. An additional RFID interface for mold recognition makes working extremely efficient.

For special tasks: RimStar and RimStar Plus

The RimStar covers the most frequently requested features in the high-end sector. Multi-point metering is one of the options as well as the entire range of mixing heads for up to six components. In addition, integration into automated system concepts is possible by means of interfaces. This makes the RimStar the ideal basis for highly efficient series production in state-of-the-art Industry 4.0 production environments. The RimStar Plus is almost entirely freely configurable. You are free to choose almost any module you wish. In addition, you have access to KraussMaffei's extensive expertise in special designs.

RimStar Flex and RimStar Nano

The RimStar Flex was specially developed for use with ColorForm technology and is characterized by its flexible system configuration and adjustment to individual requirements. Day tanks and metering pumps are installed independently of each other on a supply module and a metering module. The modules can thus be positioned individually and at different points on the injection molding machines. In addition, it is possible to combine two metering modules with a supply module.

For small output rates and minimum space requirements, for example in research institutes, the RimStar Nano is also available with particularly short pipeline routings.



RimStar Flex: Especially for use in our T3 technology ColorForm

THE EQUIPMENT OPTIONS OF THE RIMSTAR SERIES
FOR PERFECT CONDITIONING, METERING AND MIXING

Machines in the RimStar Series can condition, meter and mix PUR materials to the highest standards.

Perfect conditioning

Heat exchangers, temperature control and thorough mixing are required to keep the material in the day tank in perfect condition. KraussMaffei boasts an extensive range of different systems for optimal material conditioning – ranging from proven double-walled agitation tanks and cost-effective cartridge heaters to complex systems with heat exchangers and temperature control systems. We also offer a large number of design variations to bring you the best possible component heating and material homogenization. Agitation tanks in different sizes for optimal distribution – of filler materials, for example – are also available as an option.

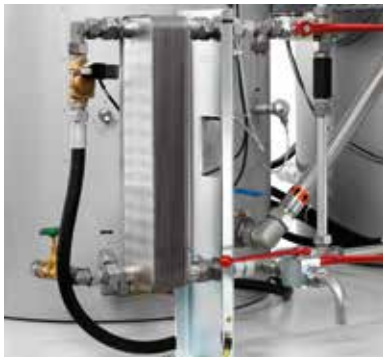

Temperature-control system

Heat exchangers can be installed in the return flow circuit, in the tank bypass with a circulation pump, upstream of the pump on the suction side or upstream on the pressure side.



Perfect metering

High-pressure pumps, edge filters, high-pressure filters, magnetic couplings and volume- and mass-flow measurement ensure the material is metered precisely and reliably.



Perfect mixing

Our range includes a large number of mixing heads for outstanding processing in different PUR systems.

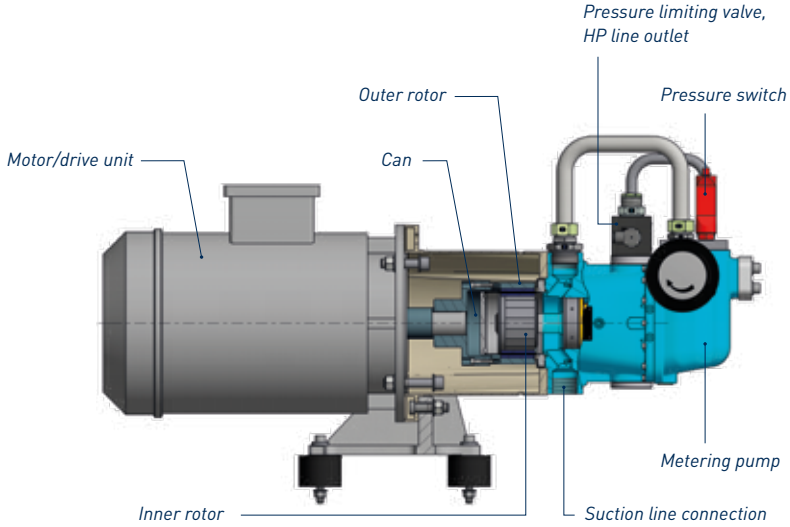







Edge and high-pressure filters

To ensure trouble-free processing of different PUR systems, we use one type of filter for the suction (low-pressure) side and another type for the high-pressure side. We also offer variants with switchover and motor-driven filter systems.

Measure, control, regulate

We offer manual and automated testing systems: We can integrate any available sensor technology (including mass-flow measurement) to monitor the process parameters – pressure, temperature and throughput – in order to ensure machine processing stability.

Magnetic coupling

We also equip our machines with a magnetic coupling if required. All the axial piston pumps we use have been specially engineered for processing polyurethane. This way, you can benefit from machines that do not leak, are maintenance-free and have a long service life. Forced rinsing also prevents materials from overheating and becoming damaged. Frequency-regulated drive units – the basis of a closed-loop system – are also available if required.

Technical equipment variations in the RimStar Series

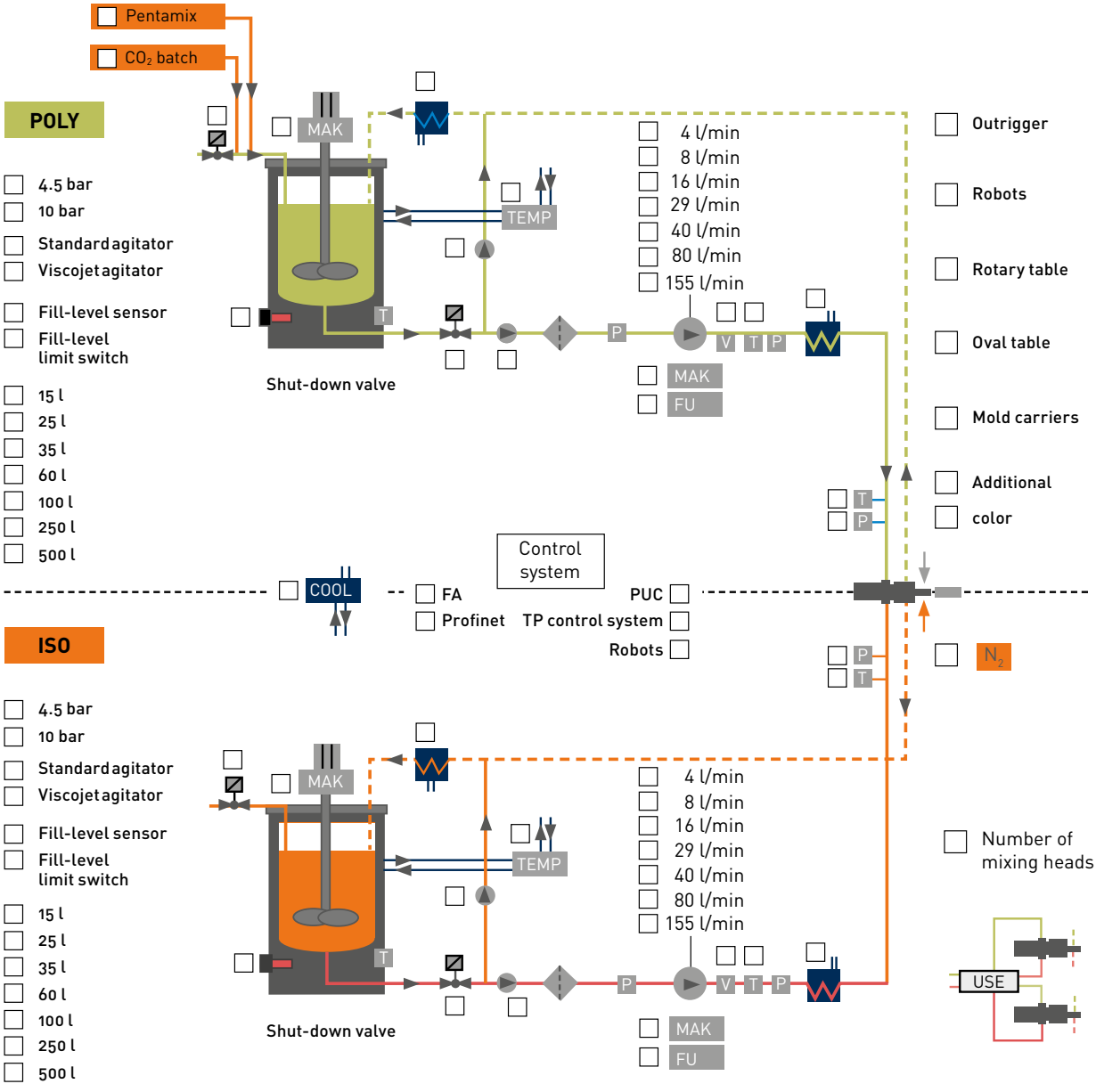

P = Pressure measurement
V = Volume flow measurement
T = Temperature measurement

FU = Frequency converter
FA = Non-KraussMaffei system

MAK = Magnet coupling
USE = Switchover units

METERING PUMPS FOR PUR SYSTEMS
CUSTOMIZED FOR EVERY REQUIREMENT

Reactive systems are a tough challenge for pump design. Our axial piston metering pumps from the KM-HPP and KM-HPP2 series are specially adapted to reactive systems. They are installed in metering machines and are used as spare parts for existing machines. The discharge capacity has been optimally adapted to customer applications and to the current mixing head product range. Benefits for you include the far longer service life, availability with fast turnaround directly from the plant, and fast, uncomplicated after-sales service from KraussMaffei.

Features
- Robust and compact design for high-precision metering of reactive systems
- Proven axial piston bent axis design with stepless adjustment by handwheel or via motor speed
- Optimally modified for the properties of the conveyed media
- Force transfer of the pumps via integrated magnetic coupling without mechanical seals and with integrated cooling
- Magnetic coupling as option

Options
- KM-HPP2 – Sizes 3 and 6 cm^3 also available in a corrosion-resistant design
- Hybrid ceramic bearing instead of standard bearings
- Optional closed-circuit operation
- Sensor-controlled monitoring of roller bearings for prompt warnings of bearing damage
- Temperature sensor in the bearing area

Additionally for KM-HPP2
- Adjustment spindle outside the pump chamber for easier seal changes
- Drive shaft bearing adapted to operating conditions with reactive systems



KM-HPP2 metering pump developed by KraussMaffei

YOUR BENEFITS:
- Significantly longer service life
- Range of pump sizes to match customer applications
- Special surface treatment for corrosion resistance
- Good volumetric efficiency
- Fast and convenient KraussMaffei Service and availability with fast turnaround



YOUR BENEFITS:

- Constant process parameters even for charged systems
- Highest production and process reliability
- Can be used with the most precise output rates and shot weights
- Precision at high and low flow rates
- Flexible and cost-effective metering of abrasive PUR components
- Technically/economically optimized machine configuration

Combination of pump and electric tandem pump metering of the hybrid series for high shot weights – for small barrel sizes

METERING MACHINE FOR CHARGED PUR SYSTEMS
THE COMET AND HYBRID SERIES

The Comet metering machine from KraussMaffei is ideally suited to processing PUR formulations containing filler. This series also offers a solution for any requirement.

For abrasive filler materials
A hydraulically driven piston is used to meter polyols and isocyanates. The piston speed is controlled servo-hydraulically. The Comet metering machines have proven themselves in PUR systems with abrasive filler materials, such as barium sulfate, calcium carbonate, glass fibers or wollastonite. They can also be used to meter PUR components that are highly viscous or have a high gas content (up to 60 percent).

Processing small quantities of material: Comet Nano
The Comet Twin metering machine enables precise processing of very small quantities of material in PUR high-pressure engineering. Each of the two PUR components is metered with a tandem piston unit. While one piston meters, the second piston draws the components in – this allows flow rates to be continuous, for example for low output rates.

Metering with pistons and pumps: Hybrid
The metering machine of the Hybrid Series is designed to process standard isocyanates and polyols containing filler. A frequency-controlled axial piston pump is used for isocyanates. The polyol is metered using a hydraulically or electrically driven piston. Two different models of hybrid machine are available. Where a single metering piston is used, the filled component is fed discontinuously. A continuous stream of the filled component can be achieved with two electrically driven metering pistons (Hybrid Tandem). The tandem arrangement combines the advantages of pump metering with those of piston metering.



Comet metering machine with hydraulically driven pistons



Precision for small quantities: Comet Nano



Comet Series metering

RIMSTAR-CCM, -RTM OR -PA
PROCESSING OF SYSTEMS IN HIGHER TEMPERATURE RANGES

Systems with demanding processing temperature requirements can be metered to perfection with the RimStar-CCM, -RTM or -PA.

High-pressure engineering ensures that the components are throughly mixed in the mixing head. RimStar-CCM, -RTM or PA metering machines are available with either pumps or pistons and can process two or more components. The machines are fitted with special metering pumps that are also suitable for corrosive materials, such as hardeners for epoxy resins.

The temperatures between the tank and mixing head are constantly monitored. This allows stable and precise temperature control with a constant operating point. Direct heating of the material-guiding machine components increases energy efficiency. The tanks can be evacuated.

YOUR BENEFITS:

- Can be used for different systems (epoxy, polyamide, polyurethane)
- High production reliability
- Clean, environmentally friendly and efficient part production
- High level of energy efficiency thanks to the enclosure of high-temperature components



RimStar RTM metering machine with heat-balancing cabin (machine with extensive customer-specific equipment)



Roof module made from carbon fibers with epoxide matrix, made in HP-RTM process

METERING MACHINES FOR DOUBLE BELT SYSTEMS
POWERFUL IN CONTINUOUS PRODUCTION

Large-format sandwich elements with fixed or flexible top layers are made on continuously running double-belt systems.

KraussMaffei metering machines for double-belt systems can process all common PUR and PIR systems and their additives, depending on the specification. The modular design of the metering machines increases the flexibility of your production. In addition to the basic components polyol and isocynate, they can also be expanded to process many other additives as required.

The metering machines are equipped with high-performance, high-pressure axial piston pumps for metering the main components. Additives are metered using high- and/or medium-pressure piston or gear pumps. Mixing heads are supplied for use in simple portals, i.e. with one mixing head, and in portals with two mixing heads. When there are two mixing heads, one is always on standby. A static mixer is used for additives in high-pressure systems, whereas a dynamic premixing station is used in low-pressure systems.

YOUR BENEFITS:

- Ability to process all common PUR and PIR systems
- Excellent product quality
- Modular machine design that can be expanded at any time
- Exact adaptation to your needs



Metering machine for a double belt system with six components



Sandwich panels have outstanding thermal insulation properties

METERING AT LOW PRESSURE
F SERIES LOW-PRESSURE METERING MACHINES

The F Series from KraussMaffei has a wide range of applications with use of medium- and low-pressure processes.

In the low-pressure process, the reactive PUR mixture is mixed using dynamic agitators and poured into the mold under next to no pressure, usually while the mold is open. The low pressure results in splash-free laminar pouring of the mixture into the mold. F Series machines are also suitable for mixing even very small pour rates of less than 2 g/s. This allows them to make parts with a low shot weight.

The series can even process high-viscosity components and systems that do not mix well. Metering of up to seven individual components (polyol, isocyanate, paints, catalysts, etc.) directly into the mixing chamber of the 7K mixing head allows colors and systems to be changed quickly. Storing colored polyols is not necessary when using paints. The low-pressure machines can also be used in the upper discharge zone (up to 7000 g/s), such as in discontinuous block foaming applications.

YOUR BENEFITS:

- Great flexibility
- High conveying efficiency
- Low loss of material
- Optimal mixing quality in different PUR systems and discharge zones



F Series for reaction-casting under low pressure (lower output rates)



F Series for reaction-casting under low pressure (lower output rates)

CONVENIENT AND RELIABLE **OPERATION ON THE TOUCH PANEL**

The touch panel is a user-friendly and reliable visualization system for PUR processing.

The TP1200 can be programmed using WinCC in the TIA Portal and Visual Basic Script. It is connected to the control system via ProfiNet. The Touch Panel is available in two designs, either as an integrated control panel in the switching cabinet or as a mobile control panel. The mobile control panel can be used at a maximum distance of 20 meters away from the Touch Panel. Up to 99 programs, each for eight partial shots, can be stored – of which nine programs, each for eight partial shots, can be variably allocated to each mixing head via foam program management. The machine continues production, even if the touch panel breaks down.

YOUR BENEFITS:

- Can support up to six component pumps
- Can connect up to sixteen mixing heads with shot-time correction
- Graphic display of the machine with all production parameters
- Tolerance monitoring of all process data
- Flexible shift data allocation
- Password protection
- Large-screen view of throughput or pressure
- External application via Ethernet interface optional for remote service connection or transferring shift protocols



Touch Panel TP 1200 Comfort

INTUITIVE OPERATION AND HIGH RELIABILITY
PROCESS DATA CAPTURE WITH THE PUC08

The PUC08 from KraussMaffei allows process data for polyurethane processing to be acquired in a clear and user-friendly way.

The clear and intuitive-to-understand user interface reduces training time and costs while ensuring quick analysis of errors and faults. Wetside and dryside components are visualized. The PUC08 gives users a complete overview of the system's current status and is not only comfortable to use but also extremely reliable. The robust computer has been designed without any moving parts – that means no fans and flash memory instead of a hard drive. The PUC08 communicates with the control system via Ethernet.

YOUR BENEFITS:

- Touchscreen with intuitive user interface
- Flexible system visualization
- Alarms, stoppages and shot records, plus all other process-relevant data, are logged and stored in an SQL database
- Production is extremely reliable as all production parameters are saved in the PLC
- System runs even when the computer breaks down
- Robust industrial computer without moving parts
- Easy to expand thanks to modular design



Process data capture with the PUC08

LOW-WEIGHT MOLDED PARTS
THANKS TO NUCLEATION WITH AIR OR CO_2

Nucleation using air or gas lowers the mold part weight and reduces material costs.

Gas nucleation is carried out either directly in the day tank of the metering machine or in a separate tank connected upstream of the day tank. Precision metering, high throughput and quick post-nucleation ensure an optimum production process.

Air nucleation

The air is metered in the machine's day tank. This ensures a uniform gas charge from shot to shot and from the beginning of a shot to the end. A dynamic mixer ensures perfect homogenization of the gas and the component. The nucleation unit is installed in the day-tank bypass circuit and has its own controller.

CO_2 nucleation

KraussMaffei offers two different processes for CO_2 nucleation: CO_2 nucleation in the buffer tank (batch) or directly in the day tank. CO_2 concentrations can be varied from shot to shot.

YOUR BENEFITS:

- Lower part weight
- Lower materials costs
- Better flow properties in the mold and improved mold filling
- Higher process reliability

CO_2 nucleation in day tank

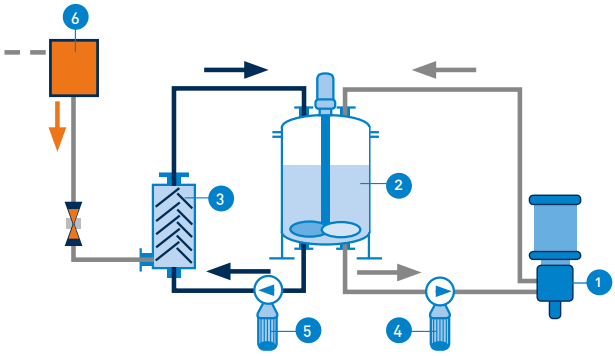

1 Mixing head
2 Day tank component
3 Static mixer
4 Metering pump
5 Recirculation pump
6 Mass-flow controller CO_2

CO_2 nucleation in buffer tank

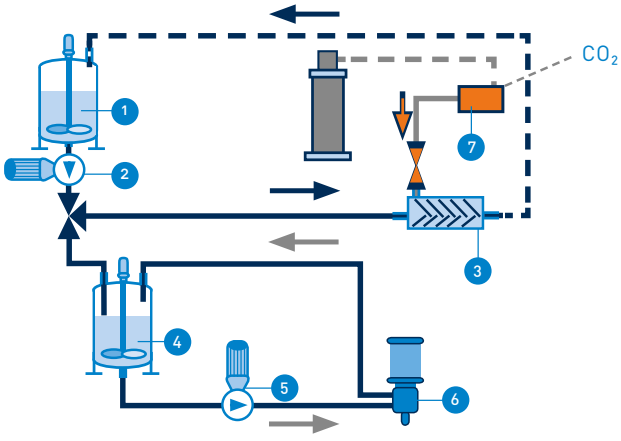

1 Mixing tank
2 Screw pump
3 Static mixer
4 Day tank/buffer tank
5 Axial piston pump
6 Mixing head
7 Mass-flow controller CO_2

OUR COLOR-METERING SYSTEMS
PRECISE, USER-FRIENDLY AND ECONOMICAL IN OPERATION

The innovative systems from KraussMaffei guarantee precise metering, and thus excellent component quality, even for the smallest flow rates. With the compact frame concept, tailored solutions can be provided.

Faster color changes

Certain applications require the use of several colors which are to be changed frequently. The MicroDos color metering system allows for fast and cost-effective color management without any need for cleaning. All elements in contact with the color are integrated in a module that is completely replaced within minutes when the color is changed.

Innovative color-metering systems

High-viscosity and abrasive dyes can be processed with the hydraulic or servo-electric CD piston metering system. The FD color-metering system, featuring a frequency regulated metering pump, is designated for the processing of non-abrasive dyes. Both systems offer you the most innovative solutions from both worlds with their closed-loop control system and double-walled agitator tanks for constant color component temperature. In addition, a central supply for several mixing and metering machines is possible (multi-point metering), with a large selection of multi-color mixing heads.

YOUR BENEFITS:

- High process reliability
- Outstanding component quality
- Maximum reliability and availability
- Easy to operate, maintain and service
- Space-saving



MicroDos: Cost- and time-saving color management with exchangeable color module



Color-metering system CD: Hydraulic or servo-electric piston metering



Color-metering system FD: Frequency-controlled metering pump

FOR THE BEST CONDITIONS
PREMIXING STATIONS, DRUM STATIONS AND CONTAINER STATIONS

Manufacturers of raw materials supply PUR components either in drums, in IBC containers or pumped from a tanker. Premixing, drum and container stations from KraussMaffei precondition PUR components in the optimum way for processing.

Premixing stations operate fully automatically to process PUR components with filler materials, such as glass fibers, barytes, expandable graphite or melamine and blowing agents (e.g. pentane). The filler materials are fed in the desired concentration from containers, such as BigBags, into the premixing tank, where they are mixed with the PUR component. The expandable graphite premixing station ensures particularly gentle handling of the solid material. The metering machine's Day tank is subsequently supplied automatically with the charged PUR component.

Drum stations are cost-effective systems that can be used to automatically fill day tanks. They are used to hold the component drums as an alternative to simple barrel pumps. Container stations are used when PUR components are supplied in IBC containers. Very simple stations or highly complex stations – such as piggyback systems with an additional buffer container, special agitators, intermittent operation for the recirculation pump and agitator, etc. – can be used depending on requirements.

YOUR BENEFITS:

- **Day tanks are filled automatically**
- **High, repeatable component quality thanks to optimal preconditioning of PUR components**
- **Cost-effective, tailored solutions thanks to the modular design**



Premixing station for expandable graphite as filler for flame retardant and soundproofing



Container station for preconditioning of the PUR components



Pentamix premixing station for pentane



Robots and mixing head manipulators ensure exact, repeatable PUR pouring patterns

YOUR BENEFITS:

- High product quality thanks to repeatable pouring patterns
- Cost reduction thanks to automated production
- Greater freedom in PUR pouring

REPEATABLE MATERIAL POURING

ROBOTS AND MIXING HEAD MANIPULATORS

When pouring PUR into open foam molds, the mixing head must usually move in pouring patterns to distribute the material. Manipulators or robots from KraussMaffei can be used to execute exact, reproducible foam pour patterns across the mold.

Manipulators or robots are used to handle mixing heads. The movement of the mixing head can be freely programmed to pour the PUR mixture even into narrow sections, for example. Challenging product specifications are met by continuously operating systems, in which the pour pattern in the mold must be additionally overlaid with the movement of the mold on a conveyor system. To do this, KraussMaffei has developed special software that can control the foam pour rate on the conveyor, section by section.

The mixing head is attached to the flange of the manipulator or robot and connected to the metering machine via pipes or hoses. The robot identifies the assigned pour-pattern program, which has been taught in advance, by reading codes on the foaming station or mold. The start of the shot is enabled via an interface to the metering machine, and the pour pattern is executed.





OUR WORLDWIDE EXPERTISE IS YOUR ADVANTAGE
DIGITAL & SERVICE SOLUTIONS

With your KraussMaffei machine, you have chosen a product that delivers the highest levels of productivity and reliability. In addition to our range of machinery, KraussMaffei focuses on comprehensive and future-oriented solu0tions, innovative business models and an innovative portfolio of digital products.

Customer service at the touch of a button

The process of digital transformation is becoming faster and easier than ever for the customer. Our Digital & Service Solutions unit makes your production chain even more flexible and efficient with future-oriented solutions. KraussMaffei thus globally provides an all-inclusive customer service package and networks machines and processes with each other. Our global support offers a sound basis for your local long-term success.

Individual challenges in mechanical engineering call for intelligent solutions

With our services portfolio, we support you throughout your machine's lifecycle with a strong focus on your specific needs. In order to satisfy your wishes, we offer you a wide range of solutions in order to ensure maximum availability and optimum productivity of your machines.

Technology³ as a unique selling proposition

KraussMaffei is the only supplier in the world with a product range comprising the most important machine technologies for plastic and rubber processing: injection molding machinery, automation, reaction process machinery and extrusion technology. KraussMaffei is represented worldwide with more than 30 subsidiaries and over 10 production plants as well as about 570 commercial and service partners. Working together with our customers and partners, we are thus in a position to offer vast and unique expertise in the industry.

You can find further information at:
www.kraussmaffei.com

KRAUSSMAFFEI – PIONEERING PLASTICS



Extensive expertise from a single supplier

KraussMaffei is one of the world's leading manufacturers of machinery and systems for producing and processing plastics and rubber. Our brand has been synonymous with cutting-edge technology for over 180 years. Our product range includes all technologies in injection molding, extrusion and reaction process machinery. KraussMaffei has a unique selling proposition in the industry as a result. By drawing on our proven innovative capacity, we can guarantee our customers sustained additional value over their entire value-adding chain through our standardized and individual product, process, digital and service solutions. The range of our products and services allows us to serve customers in many sectors including the automotive, packaging, medical and construction industries. We also supply manufacturers of electrical and electronic products and household appliances.

At your service all over the world

KraussMaffei is represented all over the world. Subsidiaries provide you with support in the countries shown in light blue. Our sales and service partners take care of you in the regions shown in white.

You can find all contact information at www.kraussmaffei.com

0.0. 4th edition 09/20. RPM 492 BR EN ··· KraussMaffei reserves the right to make technical changes ··· Printed in Federal Republic of Germany.

OUTSTANDING PRODUCT QUALITY IN PUR PROCESSING

INNOVATIVE MIXING AND METERING MACHINES.

*krauss**maffei**.com*