Kalmar DCF280-520
Lift trucks 28 – 52 tonnes



Technical information, Stage III

Welcome to a new world of heavy-duty handling

The Kalmar F generation heavy-duty lift trucks are based on long experience and smart utilisation of the lastest technology. A machine loaded with customer value.

The heavy-duty lift trucks have been developed for a broad spectrum of heavy handling applications. Very strong emphasis has been put on providing our customers, not only a machine, but productivity and cost efficiency.

This is a machine generation which reflects the overall increased demands and requirements among our customers all over the world.





The Two basic elements in heavy-duty handling

Based on our experience from more than 10.000 predecessors operating worldwide, the F-generation has gone through an aggressive product development, where we have scrutinised and improved every detail, component and system.

We have learnt that demanding customers have two main priorities when it comes to machine choice and decision – productivity and cost efficiency. All other aspects are there to fulfil these priorities and add even more customer value.

When appropriate simple technical solutions were available we applied them, and when the need was for more sophisticated systems we installed them to increase your productivity and cost efficiency.

And there is of course, exciting new leveraging technology under the skin in order to provide the best everyday performance and availability.

Finally, the technical optimisation of the Kalmar F-series means that you will get the best technology available but still have the feeling of having a reliable, simple, safe and hard working machine.

This is what it's all about. But of course you have to add "at the lowest operational cost possible".

Made for top performance

To obtain the maximum out of your investment, you can never underestimate the importance of the drivers' working environment. High productivity requires full driver concentration and efficiency to keep up handling speed, but also to avoid accidents causing injuries and costly damages.

This is what ergonomics is all about. Being comfortable and aware.

The driver environment in Kalmar Heavy Lift Trucks is the efficient Spirit Delta high visibility cabin; appreciated by professional drivers, proven on thousands of Kalmar medium heavy lift trucks and container handlers all over the world.

We focus on four important ergonomic areas:

- Operation
- Visibility
- Sound and vibrations
- Climate

The result is a cabin where everything is optimised to improve driver performance.

Consider this:

- Individually adjustable controls, steering wheel and seat.
- Intuitively positioned instruments.
- Switches and buttons with lights.
- Comfort pedals.
- Electronic accelerator pedal.
- Central operation/warning display.
- Separately suspended and isolated cabin.
- Shock absorption to minimise vibrations.
- Maximum sound level inside is 70 dB (A).
- Generous interior dimensions and floor space.
- Optimised visibility – 360° all around.
- Electronically controlled heating/ventilation.
- Filters for fresh air and recirculation.
- High performance air conditioning system, optional.
- Pollen filter, optional.

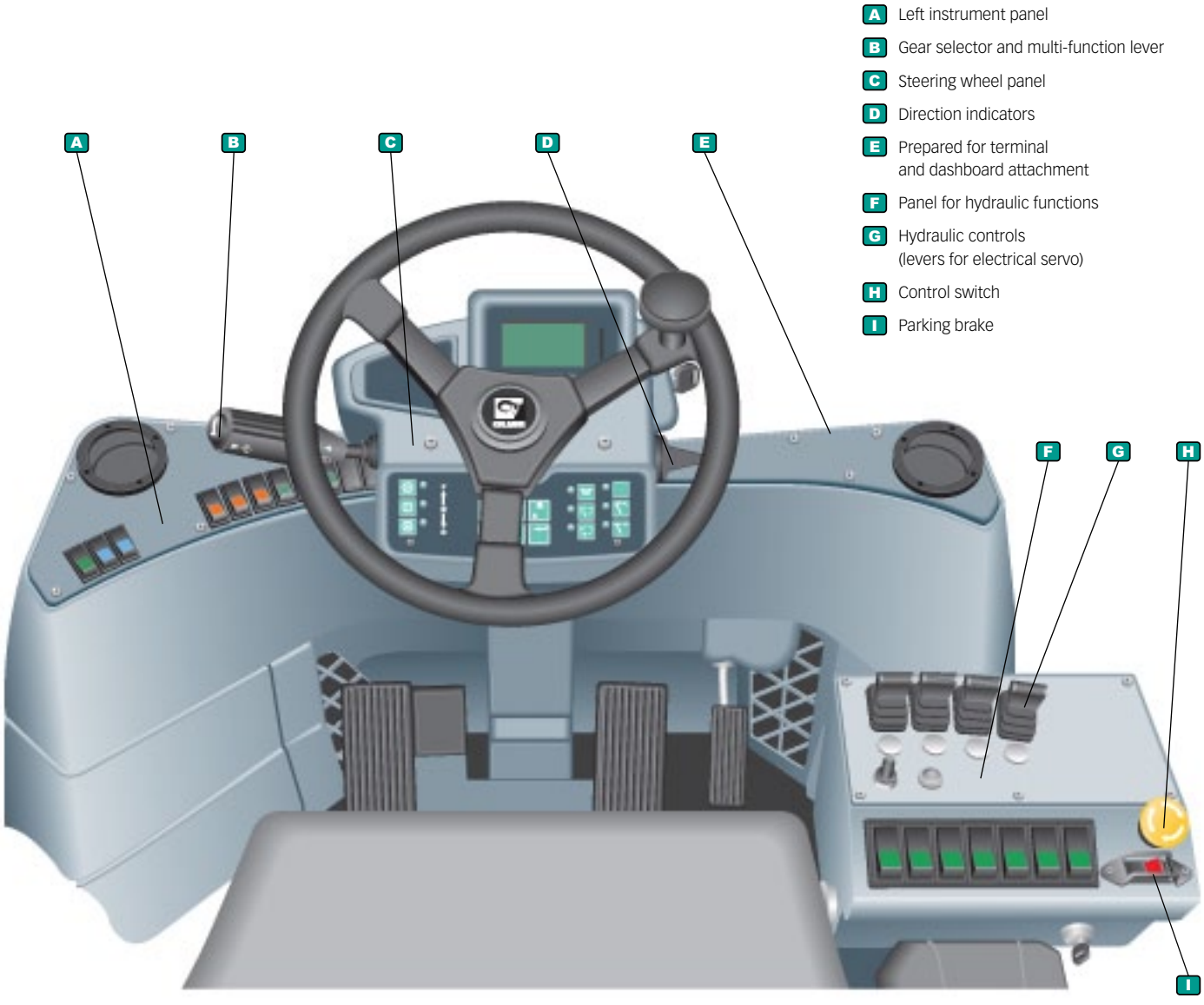

Match your specific handling requirements

When we designed the Kalmar F-series we already knew the detailed status of all the main alternatives on the market. Hence, we designed a machine which meets or exceeds the specifications of the others – on the spec sheet and in reality.

You can choose between several basic models, each optimised according to lifting capacity – stability – overall dimensions – weight – and driving performance.

Ten models covering loads between 28 – 52 tonnes, specified for a comprehensive range of lifting heights at 1200 mm load centre, including the side-shift/fork positioning carriage. This means that you may easily find the right machine or combination of machines to suit your operational requirements.

The design of the chassis, mast and carriage has resulted in machines with very good dimensional-, stability- and operational characteristics.

In spite of its size and capacity the machines have short turning radius. Together with the optimised visibility and good manoeuvrability, it saves site space and makes the machine a smooth operator in confined spaces. The counterweight and lifting height requirements have been matched with a modern chassis to keep down the overall weight but with no sacrifice in stability.

Additionally, we have ensured that every single detail, component and system have been selected and manufactured to provide the highest possible reliability.

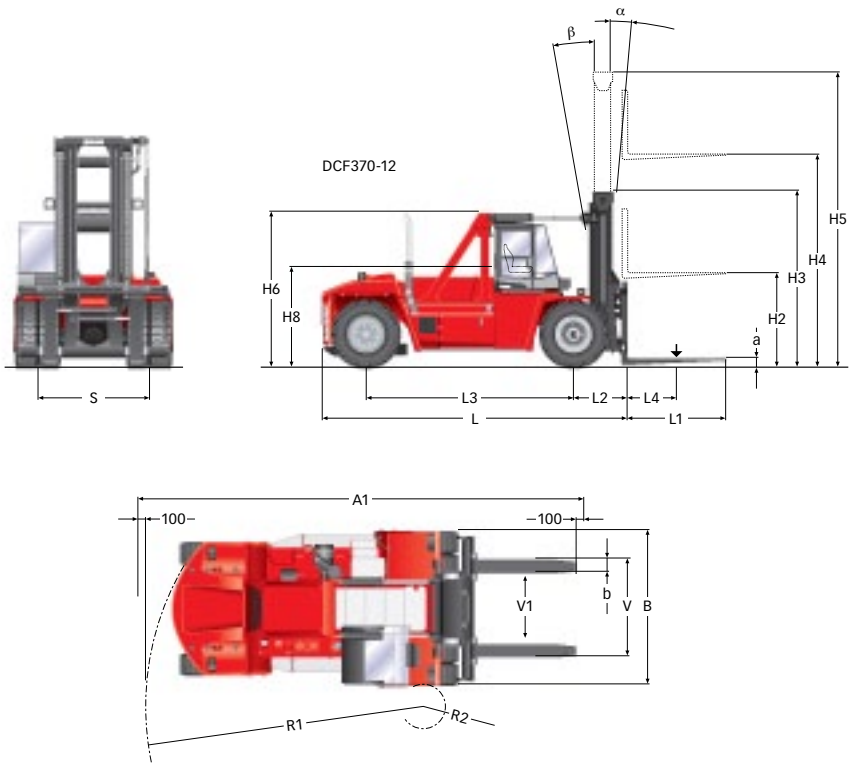

Dimensions

Lifting capacity	Rated (kg)	
	Load centre (mm)	L4
Truck	Truck length (mm)	L
	Truck width (mm)	B
	Height, basic machine, Spirit Delta (mm)	H6
	Seat height, Spirit Delta (mm)	H8
	Distance between centre of front axle – front face of fork arm (mm)	L2
	Wheelbase (mm)	L3
	Track (c-c) front – rear (mm)	S
	Turning radius, outer – inner (mm)	R1 – R2
	Ground clearance, min. (mm)	
	Height when tilting cab, max. Spirit Delta (mm)	T1
	Width when tilting cab, max. Spirit Delta (mm)	T2
	Min. ailse width for 90° stacking with forks (mm)	A1
Standard duplex mast	Lifting height (mm)	H4
	Mast height, min. (mm)	H3
	Mast height, max (mm)	H5
	Mast tilting, forward – backward* (°)	α – ß
	Ground clearance, min.	
Forks	Width (mm)	b
	Thickness (mm)	a
	Length of fork arm (mm)	l
	Width across fork arms, max. – min. (mm)	V
	Sideshift ± at width across fork arms (mm)	V1 – V
Weight	Service weight (kg)	
	Axle load front, unloaded (kg)	
	Axle load front, at rated load (kg)	
	Axle load back, unloaded (kg)	
	Axle load back, at rated load (kg)	
Wheels / tyres	Type, front – rear	
	Dimensions, front – rear (inch)	
	Number of wheels, front – rear (*driven)	
	Pressure (Mpa)	
Steering system	Type – manoeuvring	
Service brake system	Type – affected wheels	
Parking brake system	Type – affected wheels	
Hydraulic pressure	Max. (Mpa)	
Hydraulic fluid volume	(l)	
Fuel volume	(l)	

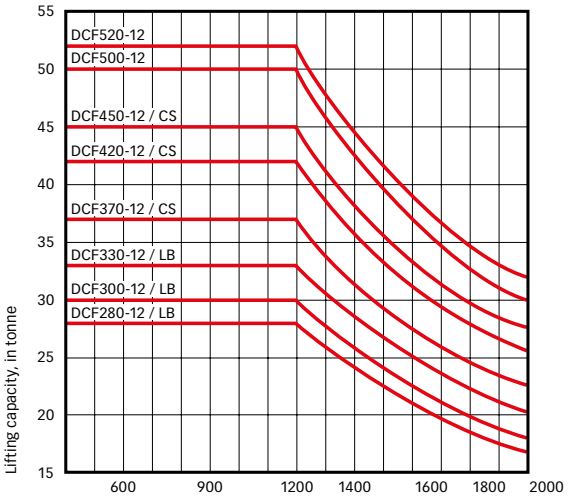

DCF280-330[1] / DCF370-520[2] models: Full lifting capacity up to 7.000[1] / 10.000[2] mm lift height with duplex/duplex freelift masts and integrated sideshift/fork positioning carriage.

DCF280-12LB



DCF450-12CS



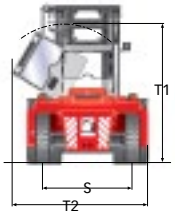





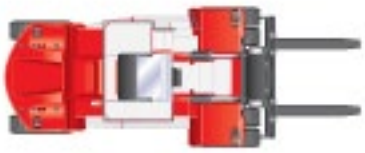

DCF280-12	DCF300-12	DCF330-12	DCF370-12	DCF420-12	DCF450-12	DCF500-12	DCF520-12
• LB	• LB	• LB	• CS	• CS	• CS	•	•
28000	30000	33000	37000	42000	45000	50000	52000
1200	1200	1200	1200	1200	1200	1200	1200
6675	6675	6925	7345	7845	7950	8550	8550
3410	3410	3410	4150	4150	4150	4150	4150
3650 3415	3650 3415	3650 3415	3725 4550	3725 4620	3825 4720	3825	3825
2300	2300	2300	2350 3460	2350 3530	2450 3630	2450	2450
1125	1125	1125	1295	1295	1400	1440	1440
4500	4500	4750	5000	5500	5500	6000	6000
2540 – 2440	2540 – 2440	2540 – 2440	3030 – 2625	3030 – 2625	3030 – 2815	3030 – 2815	3030 – 2815
6600 – 950	6600 – 950	6600 – 950	6900 – 1000	7400 – 1100	8150 – 1100	8650 – 1200	8650 – 1200
300	300	300	300	300	300	300	300
–	–	–	–	–	–	–	–
–	–	–	–	–	–	–	–
10325	10325	10325	10795	11295	12100	12600	12600
5000	5000	5000	5000	5000	5000	5000	5000
4520	4520	4520	5050	5050	5050	5600	5600
7020	7020	7020	7550	7550	7550	8100	8100
5 – 10	5 – 10	5 – 10	5 – 10	5 – 10	5 – 10	5 – 10	5 – 10
–	–	–	–	–	–	–	–
300	300	300	300	300	300	300	300
110	110	110	135	135	135	145	145
2400	2400	2400	2400	2400	2400	2400	2400
2750 – 1550	2750 – 1550	2750 – 1550	2750 – 1950	2750 – 1950	2750 – 1950	2700 – 1900	2700 – 1900
300 – 2150	300 – 2150	300 – 2150	200 – 2350	200 – 2350	200 – 2350	200 – 2300	200 – 2300
38300	39600	40600	50100	51900	56000	61500	63000
19600	19600	19600	26400	27400	28800	33000	34000
61700	64900	68800	81800	88400	95100	105300	108800
18700	20000	21000	23700	24500	27200	28500	29000
4600	4700	4800	5300	5500	5900	6200	6200
Pneumatic – Pneumatic							
16.00×25 – 16.00×25			18.00×25 – 18.00×25			18.00×33 – 18.00×33	
4* – 2	4* – 2	4* – 2	4* – 2	4* – 2	4* – 2	4* – 2	4* – 2
1,0	1,0	1,0	1,0	1,0	1,0	1,0	1,0
Hydraulic servo – Steering wheel							
Oil cooled disc brakes (Wet disc brakes) – drive wheels							
Dry, spring activated disc brake – drive wheels							
17,0	17,0	17,0	15,0	17,0	18,0	20,0	20,0
600	600	600	600	600	600	600	600
400	400	400	400	400	400	400	400

Versatility provides productivity

The standard lifting equipment of Kalmar is an integrated assembly consisting of a free visibility duplex mast, side-shift/fork positioning carriage and forks, hydraulics and control system. This is to ensure you get a reliable and good running machine with high availability even after long shifts and high load stresses in general cargo handling.

A major objective in the development process has been to combine optimum functionality for the driver together with high performance in lifting and load handling.

The mast and carriage are computer designed and optimised (FEM and Catia V5) which allowed for a decrease in the front axle weight. Together with Kalmar's integrated high capacity carriage it allows you to fully utilise the capabilities of mast tilt, side-shift at full lifting height and full capacity. No compromises.



Full visual contact with the load and attachement, is provided by the Spirit Delta cabin and the open design of the mast and carriage.

Due to the wide range of optional equipment the machines can be equipped with a lifting equipment adapted to almost every application.

1 Duplex standard mast

The Duplex mast is a well proven design which minimises the concealed angles for the driver.



2 Duplex free-lift mast

The Duplex mast is also available in a Free-lift version for certain lifting heights and models, providing full free-lift as well as exceptionally good through visibility.



Duplex standard, clear view

Lift height, H4	DCF280-330 / LB			DCF370-450 / CS			DCF500			DCF520		
	Mast height H3 min.	Mast height H5 max.	Free lift, H2	Mast height H3 min.	Mast height H5 max.	Free lift, H2	Mast height H3 min.	Mast height H5 max.	Free lift, H2	Mast height H3 min.	Mast height H5 max.	Free lift, H2
4000	4020	6020	–	4550	6550	–	5100	7100	–	5100	7100	–
4500	4270	6520	–	4800	7050	–	5350	7600	–	5350	7600	–
5000	4520	7020	–	5050	7550	–	5600	8100	–	5600	8100	–
5500	4770	7520	–	5300	8050	–	–	–	–	–	–	–
6000	5020	8020	–	5550	8550	–	6100	9100	–	–	–	–
6500	5270	8520	–	5800	9050	–	–	–	–	–	–	–
7000	5520	9020	–	–	–	–	6600	10100	–	–	–	–
7500	–	–	–	6300	10050	–	6850	10600	–	–	–	–
10000	–	–	–	7550	12550	–	–	–	–	–	–	–

Duplex free-lift, clear view*

Lift height, H4	DCF280-330 / LB			DCF370-450 / CS			DCF500			DCF520		
	Mast height H3 min.	Mast height H5 max.	Free lift, H2	Mast height H3 min.	Mast height H5 max.	Free lift, H2	Mast height H3 min.	Mast height H5 max.	Free lift, H2	Mast height H3 min.	Mast height H5 max.	Free lift, H2
4000	4020	6020	2000	4550	6550	2000	–	–	–	–	–	–
4500	4270	6520	2250	4800	7050	2250	–	–	–	–	–	–
5000	4520	7020	2500	5050	7550	2500	5050	7550	2500	5050	7550	2500
5500	4770	7520	2750	5300	8050	2750	–	–	–	–	–	–
6000	5020	8020	3000	5550	8550	3000	–	–	–	–	–	–

** Duplex freelift and triplex mast requires el-hydr. servo incl minilevers.*

Triplex free-lift, clear view*

Lift height, H4	DCF280-330 / LB			DCF370-450 / CS			DCF500			DCF520		
	Mast height H3 min.	Mast height H5 max.	Free lift, H2	Mast height H3 min.	Mast height H5 max.	Free lift, H2	Mast height H3 min.	Mast height H5 max.	Free lift, H2	Mast height H3 min.	Mast height H5 max.	Free lift, H2
5900	4220**	8150**	2080	–	–	–	–	–	–	–	–	–
6000	–	–	–	4310**	8210**	2000	–	–	–	–	–	–

** Duplex freelift and triplex mast requires el-hydr. servo incl minilevers.*
*** Might be slightly reduced if the smallest available tyres are choosed.*

1 Standard carriage

Sideshift/fork positioning carriage hydraulic operated of free visibility type. The functions includes sideshift and fork positioning.



2 Carriage for steel application

This carriage of free visibility type includes sideshift and fork positioning. The forks could be positioned againts each other to become a sort of flexible coil ram.

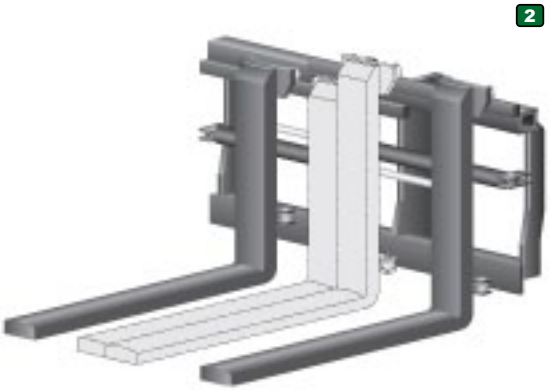

1 Fork shaft system

A smooth way to improve handling flexibility is to use the fork shaft system. The system enables the driver to quick and easy change between different carriers or attachments like extra long forks, coil ram, inverted forks etc. The carriage is equipped with a separate shaft holder. The fork shaft system could be of pin-type or hook-on type.





2 Coil ram

The coil ram is made for intensive handling of heavy coils. The coil ram is used together with fork shaft system and supported with side-shift function.

3 Top-lift attachment

The container top-lift attachment is available in two fixed sizes – 20” and 40”. It is used together with either standard forks or inverted forks. The hydraulics for the twist-locks is connected through quick couplings.

4 Inverted forks

The inverted forks are easily mounted on the fork shaft system. They are used as carrier for the top lift attachments. The inversion also means that the basic lifting height is maintained.



The basic set up

A key factor for heavy duty handling productivity is the basic machine set up. Heavy loads and high lifting speed, for example, put critical demands on the engine and hydraulic power support. Fast positioning during the handling cycle requires precise control with tight turning radius, effective and reliable brakes and high engine torque. Fast handling requires good stability, reliable brakes and smooth transmission.

Of course, all the working components and systems have to cope with the most demanding stresses during long shifts and heavy operations everyday.

We have put highest priority on overall technical reliability. Looking at the choice of each component, long running cycle times and how it all comes together. We have incorporated into the Heavy Lift Trucks several major components and systems from our extremely reliable DRF reachstacker. Thousands of these machines have been delivered in the past years and have proven the durability of the components and systems, and its low running costs.

1 Chassis

The frame forms the basis of the machine's lifting and manoeuvring characteristics and was designed exclusively for heavy duty operation. The beam construction, along with its width, makes the Heavy Lift Trucks stable, torsion resistant and service-friendly.

The frame is 3D modulated (Catia V5) and designed (FEM) in order to eliminate critical tensions under various kinds of strain. The mechanically welded chassis has been optimised according to strength, weight and stability.



2 Engine

The Volvo engines provide power for driving and the working hydraulics. The engines are low-emission turbo diesels with fuel injectors and intercoolers. The design of the combustion chambers, along with the precise fuel injection control, ensures more efficient combustion to provide lower emissions with increased torque and power. The engines meet the Stage 3A and Tier 3 requirements, and the sound and vibration standards.

The radiator is a 3 chamber design with a single fan to provide cooling for the engine and transmission. The engine cooler's separate expansion chambers are fitted with a level sensor that indicates low coolant level.

3 Transmission

The transmission transfers power from the engine to the hydraulic pumps and drive line. The engine and gearbox control systems work together to find the optimum balance between power and fuel economy at any given time. The transmission system consists of a torque converter and a gearbox. The gearbox is automatic, but can partly be shifted manually.

4 Drive line

The propeller shaft and drive axle transfer the power from the transmission to the driving wheels. The mountings on the propeller shaft are fitted with cross-flanges for optimum strength. The drive axle gears down in two stages, differential and hub reduction. The engine provides maximum torque at the drive wheels, which spares the transmission.

5 Steering system

The steering axle is built from a single piece of high strength steel, which means fewer parts requiring less maintenance and higher structural integrity. The suspension points on the steering axle utilise a maintenance-free plastic. The hydraulics that feed oil to the steering cylinder are optimised for enhanced driving feel. The orbitrol and the priority valve jointly provide gentle, yet precise, steering movements.

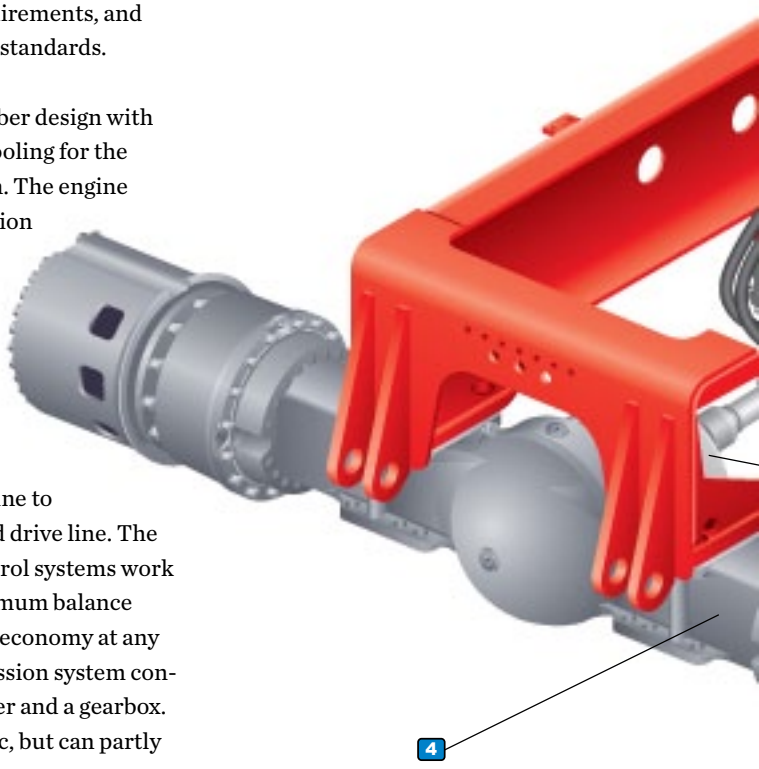

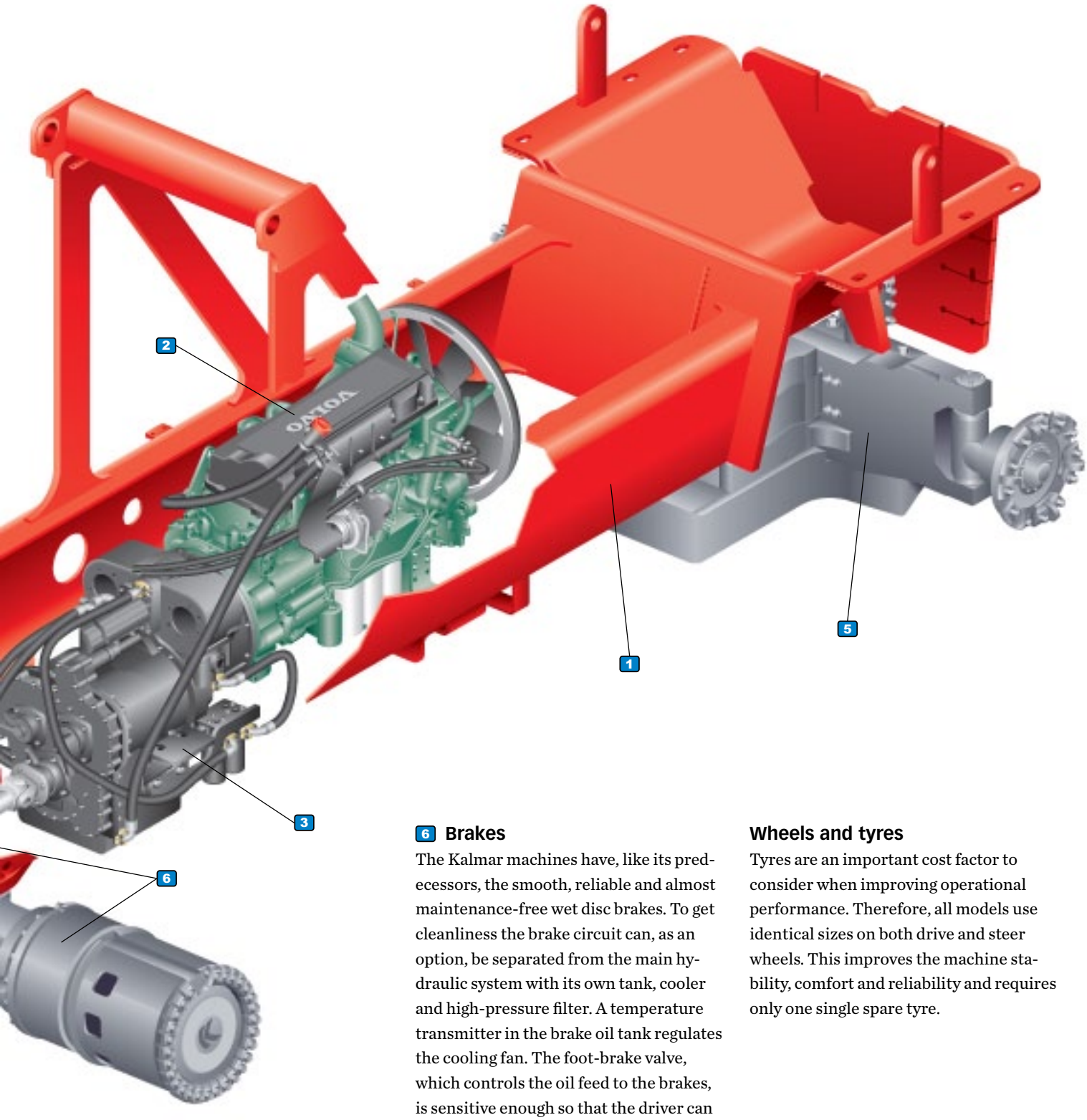

6 Brakes

The Kalmar machines have, like its predecessors, the smooth, reliable and almost maintenance-free wet disc brakes. To get cleanliness the brake circuit can, as an option, be separated from the main hydraulic system with its own tank, cooler and high-pressure filter. A temperature transmitter in the brake oil tank regulates the cooling fan. The foot-brake valve, which controls the oil feed to the brakes, is sensitive enough so that the driver can brake optimally yet gently. The parking brake is activated automatically when the ignition is turned off.

Wheels and tyres

Tyres are an important cost factor to consider when improving operational performance. Therefore, all models use identical sizes on both drive and steer wheels. This improves the machine stability, comfort and reliability and requires only one single spare tyre.

The basic set up is a key factor for high productivity

Drive train – DCF280-330 / LB		**Volvo TAD760VE**	**Cummins QSB6,7**
Engine	Manufacturer, type designation	Volvo TAD760VE (Turbo-Intercooler)	Cummins QSB6,7 (Turbo-Intercooler)
	Fuel – type of engine	Diesel – 4-stroke	Diesel – 4-stroke
	Rating ISO 3046 – at revs (kW – rpm)	180 – 2200	194 – 2200
	Peak torque ISO 3046 – at revs (Nm – rpm)	1100 – 1500	990 – 1400
	Number of cylinders – displacement (cm^3)	6 – 7150	6 – 6700
	Fuel consumption, normal driving (l/h)	16	20
Gearbox	Manufacturer, type designation	Dana TE17000	Dana TE17000
	Clutch, type	Torque converter	Torque converter
	Gearbox, type	Powershift	Powershift
	Numbers of gears, forward – reverse	3 – 3	3 – 3
Alternator	Type – power (W)	AC – 1920	AC – 1920
Starting battery	Voltage – capacity (V – Ah)	2×12 – 140	2×12 – 140
Driving axle	Manufacturer – Type	AxleTech – Differential and hub reduction	AxleTech – Differential and hub reduction

Performance – Volvo TAD760VE		**DCF280-12 / LB**	**DCF300-12 / LB**	**DCF330-12 / LB**
Lifting speed	Unloaded (m/s)	0,35	0,35	0,35
	At rated load (m/s)	0,18	0,18	0,18
Lowering speed	Unloaded (m/s)	0,38	0,38	0,38
	At rated load (m/s)	0,47	0,47	0,47
Travelling speed, F/R	Unloaded (km/h)	27,5 – 27,5	27,5 – 27,5	27,5 – 27,5
	At rated load (km/h)	25,5 – 25,5	25,5 – 25,5	25,5 – 25,5
Gradeability, max.	Unloaded (%)	30	30	30
	At rated load (%)	27,5	27,5	27,5
Gradeability, at 2 km/h	Unloaded (%)	30	30	30
	At rated load (%)	19,5	19,5	19,5
Drawbar pull	Max. (kN)	209	209	209
Noise level, inside	LpAZ*, Spirit Delta (dB(A))	72	72	72
Noise level, outside	LwAZ** (dB(A))	–	–	–

** LpAZ according to EN12053 ** LwAZ according to 2000/14/EC*

Performance – Cummins QSB6,7		**DCF280-12 / LB**	**DCF300-12 / LB**	**DCF330-12 / LB**
Lifting speed	Unloaded (m/s)	0,35	0,35	0,35
	At rated load (m/s)	0,18	0,18	0,18
Lowering speed	Unloaded (m/s)	0,38	0,38	0,38
	At rated load (m/s)	0,47	0,47	0,47
Travelling speed, F/R	Unloaded (km/h)	27,5 – 27,5	27,5 – 27,5	27,5 – 27,5
	At rated load (km/h)	25,5 – 25,5	25,5 – 25,5	25,5 – 25,5
Gradeability, max.	Unloaded (%)	52,5	52,5	52,5
	At rated load (%)	27,5	27,5	27,5
Gradeability, at 2 km/h	Unloaded (%)	36,5	36,5	36,5
	At rated load (%)	19,5	19,5	19,5
Drawbar pull	Max. (kN)	209	209	209
Noise level, inside	LpAZ*, Spirit Delta (dB(A))	72	72	72
Noise level, outside	LwAZ** (dB(A))	–	–	–

** LpAZ according to EN12053 ** LwAZ according to 2000/14/EC*

Drive train – DCF370-520, DCF370-450CS		Volvo TAD952VE	Volvo TAD1250VE	Cummins QSM11
Engine	Manufacturer, type designation	Volvo TAD952VE (Turbo-Intercooler)	Volvo TAD1250VE (Turbo-Intercooler)	Cummins QSM11 (Turbo-Intercooler)
	Fuel – type of engine	Diesel – 4-stroke	Diesel – 4-stroke	Diesel – 4-stroke
	Rating ISO 3046 – at revs (kW – rpm)	252 – 1900	260 – 1600	261 – 2000
	Peak torque ISO 3046 – at revs (Nm – rpm)	1735 – 1300	1760 – 1400	1830 – 1100-1400
	Number of cylinders – displacement (cm^3)	6 – 9400	6 – 12130	6 – 10800
	Fuel consumption, normal driving (l/h)	20	20	20
Gearbox	Manufacturer, type designation	Dana TE32000	Dana TE32000	Dana TE32000
	Clutch, type	Torque converter	Torque converter	Torque converter
	Gearbox, type	Powershift	Powershift	Powershift
	Numbers of gears, forward – reverse	4 – 4	4 – 4	4 – 4
Alternator	Type – power (W)	AC – 1920	AC – 1920	AC – 1920
Starting battery	Voltage – capacity (V – Ah)	2×12 – 140	2×12 – 140	2×12 – 140
Driving axle	Manufacturer – Type	AxleTech – Differential and hub reduction	AxleTech – Differential and hub reduction	AxleTech – Differential and hub reduction

Performance – Volvo TAD952VE		DCF370-12 / CS	DCF420-12 / CS
Lifting speed	Unloaded (m/s)	0,35	0,35
	At rated load (m/s)	0,18	0,18
Lowering speed	Unloaded (m/s)	0,38	0,38
	At rated load (m/s)	0,47	0,47
Travelling speed, F/R	Unloaded (km/h)	27,5 – 27,5	27,5 – 27,5
	At rated load (km/h)	25,5 – 25,5	25,5 – 25,5
Gradeability, max.	Unloaded (%)	30	30
	At rated load (%)	27,5	27,5
Gradeability, at 2 km/h	Unloaded (%)	30	30
	At rated load (%)	19,5	19,5
Drawbar pull	Max. (kN)	209	209
Noise level, inside	LpAZ*, Spirit Delta (dB(A))	72	72
Noise level, outside	LwAZ** (dB(A))	–	–

** LpAZ according to EN12053 ** LwAZ according to 2000/14/EC*

Performance – Volvo TAD1250VE		DCF370-12 / CS	DCF420-12 / CS	DCF450-12 / CS	DCF500-12	DCF520-12
Lifting speed	Unloaded (m/s)	0,34	0,34	0,34	0,34	0,34
	At rated load (m/s)	0,27	0,27	0,27	0,27	0,27
Lowering speed	Unloaded (m/s)	0,22	0,22	0,22	0,22	0,22
	At rated load (m/s)	0,40	0,40	0,40	0,40	0,40
Travelling speed, F/R	Unloaded (km/h)	27 – 27	27 – 27	27 – 27	27 – 27	27 – 27
	At rated load (km/h)	24 – 24	23 – 23	22 – 22	21 – 21	20 – 20
Gradeability, max.	Unloaded (%)	35	35	35	35	35
	At rated load (%)	34	32	31	29	33
Gradeability, at 2 km/h	Unloaded (%)	35	35	35	35	35
	At rated load (%)	31	29	28	26	25
Drawbar pull	Max. (kN)	329	329	329	329	329
Noise level, inside	LpAZ*, Spirit Delta (dB(A))	72	72	72	72	72
Noise level, outside	LwAZ** (dB(A))	–	–	–	–	–

** LpAZ according to EN12053 ** LwAZ according to 2000/14/EC*

Performance – Cummins QSM11		DCF370-12 / CS	DCF420-12 / CS	DCF450-12 / CS	DCF500-12	DCF520-12
Lifting speed	Unloaded (m/s)	0,34	0,34	0,30	0,30	0,30
	At rated load (m/s)	0,27	0,27	0,25	0,25	0,25
Lowering speed	Unloaded (m/s)	0,22	0,22	0,22	0,22	0,22
	At rated load (m/s)	0,40	0,40	0,40	0,40	0,40
Travelling speed, F/R	Unloaded (km/h)	24 – 24	24 – 24	27 – 27	25 – 25	25 – 25
	At rated load (km/h)	20 – 20	20 – 20	22 – 22	21 – 21	21 – 21
Gradeability, max.	Unloaded (%)	35	35	35	35	35
	At rated load (%)	43	43	34	33	33
Gradeability, at 2 km/h	Unloaded (%)	35	35	35	35	35
	At rated load (%)	28	28	26	25	25
Drawbar pull	Max. (kN)	379	379	368	368	368
Noise level, inside	LpAZ*, Spirit Delta (dB(A))	72	72	72	72	72
Noise level, outside	LwAZ** (dB(A))	–	–	–	–	–

** LpAZ according to EN12053 ** LwAZ according to 2000/14/EC*

The simple way to reach new levels of utilisation

All vehicles today – cars, highway trucks, wheel-loaders, cranes etc – are constructed with more and more sophisticated components and systems. Each part interacts closely with the others and to reach the full potential requires computer assistance.

This built-in intelligence is designed to support and leverage your handling operations, not confuse it.

The Kalmar F-series posses a well proven, thoroughly tested and optimised control system, which supports your driver, mechanics and financial controller. And it is simple to use.

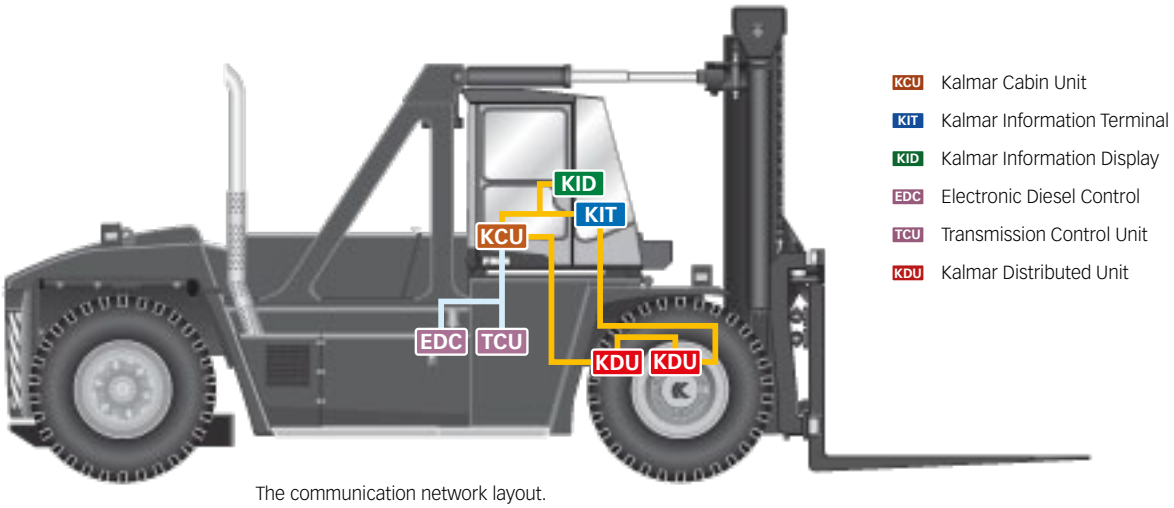

The communication network layout.

The reliable distributed control system

Two things are needed for a command initiated by the driver to result in a particular function, or for several functions to work together: power supply and communication.

The power-feed supplies the machine's electrical or electro-hydraulic functions with voltage. The communication system controls and checks that the functions have been activated, waits in standby mode or indicates faults.

Communication

The distributed power-feed and communication network consists of electrical components and a microcomputer-based system for controlling and monitoring the functions.

The most important components in the network are the control units (nodes).

They distribute control of the machine's functions. Each node has its own processor. The nodes integrate with each other and all communication; control signals and signal information are sent via data buses.

The nodes transmit their signals in messages on the network. Each message contains several signals and has its own address. Any units that need to know the status of a signal listen out for the address of the signal's message. All the nodes in the network listen to each other.

CAN-bus is a two-wire transfer of data and a definition of a bus type. CAN-bus technology has been chosen because it provides a reliable, robust transfer of data and is difficult to disrupt. CAN-bus loops have been used in Kalmar machines since 1995.

The greatest benefit of using CAN-bus technology is that the amount of cabling can be reduced. All that is needed to establish communication are two data-bearing leads and two leads for feeding the nodes' processors. The network loop for both the CAN-bus and the nodes' processor feed are redundant.

The Kalmar Cabin Unit (KCU) is the control node for the entire network. There are several nodes, called KDUs (Kalmar Distribution Units), in the network. Each node is positioned near to the functions it is designed to deal with.

The Transmission Control Unit (TCU), which is the gearbox node, deals with the gearbox. The unit is connected in a separate CAN-bus loop with the EDC engine node (Engine Diesel Control) and KCU. The engine node controls the fuel injection and receives its control signals from its own transmitters on the engine.

Power supply

Power-feed for the functions differ from the feed required for communication and feeding of the nodes' processors. Each distribution unit (node) in the distributed network is fed voltage from one of the power distribution boxes. The distribution boxes are located inside the cabin and on one side of the frame. The distribution units (nodes) guide power from the distribution box to the required functions based on the instructions in the messages from the communication network.

Control functions – support the driver

The driver and machine communicate very simple via the Kalmar Information Terminal (KIT) and the Information Display located right in front of the driver in the cabin. The two-way communication – from the driver to the machine and opposite – is handled by the KCU (Kalmar Cabin Unit) which is the control node for the entire network.

Information to the driver comprises alarm warnings, operating details and action-guided information. Messages, status, fault indications etc are presented on the Information Display (KID), while warnings and other monitoring indications are presented to the left.

Messages are only presented when they are relevant to the driver and the operation. The driver can focus on the job instead of checking meters and indicators.



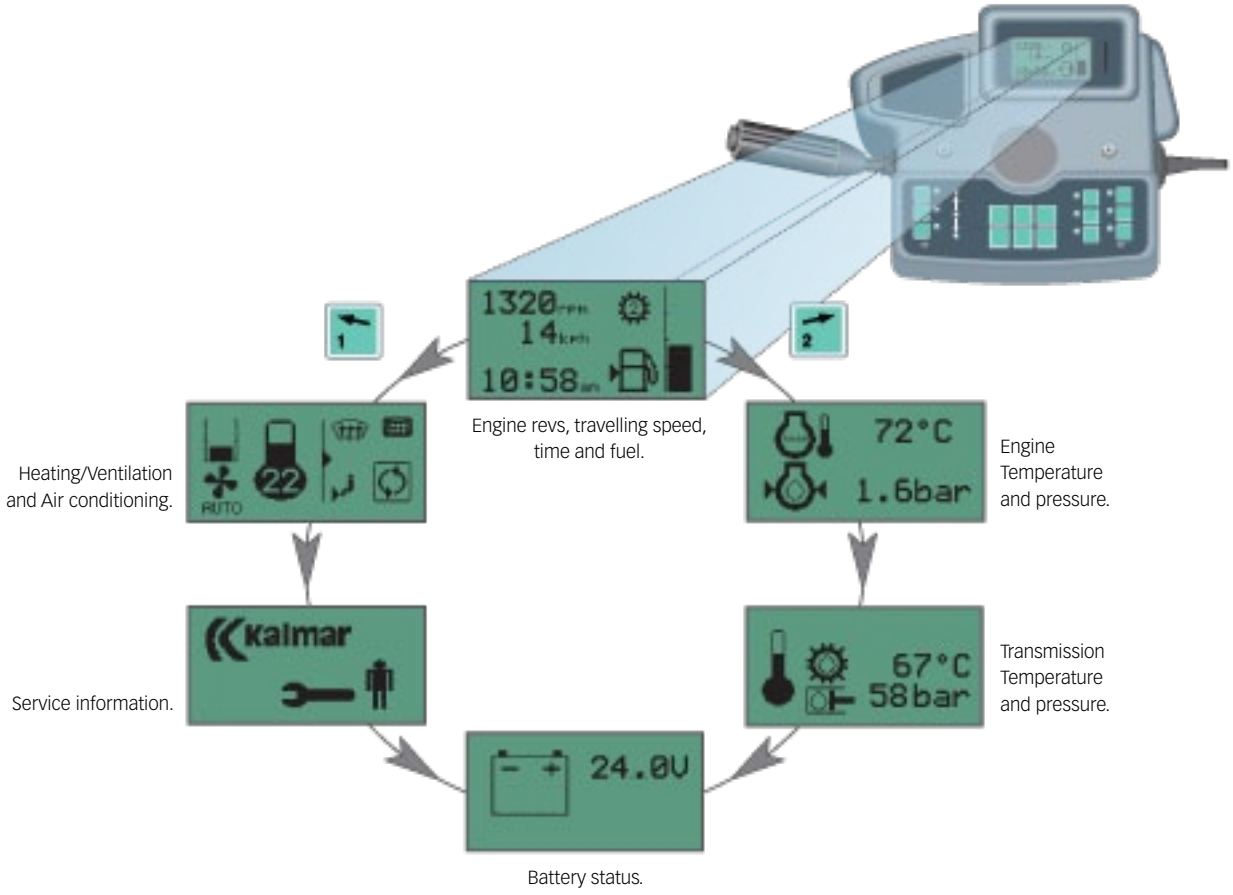

We have made sure your investment becomes profitable

To understand the full potential of your investment requires being aware of the details, features and technical matters in a machine like the Kalmar F-generation.

But when it comes to availability it is critical that it operates constantly and is kept in good condition with an absolute minimum of maintenance and repairs.



Less stops for planned mainenance

The service intervals have been extended to 500 hours, which means that you don't have to take the machine out of work more than 6 times a year (3.000 hours utilisation).

The DCF is designed for fast daily inspection and preventive maintenance. All checkpoints are easy accessible and concentrated to specific locations. Lubrication free components or central lubrication points have been utilised. The wet disc brake system is practically maintenance free.

The indicator and monitoring support built into our control system make sure that the machine won't be misused or maintained incorrectly. The driver and mechanics will always get indications and guidance in time to avoid unnecessary and costly wear and tear or technical breakdowns. No unwanted stops.

A safe communication network

The control and monitoring system is the Kalmar control system, already successfully applied in more than 1.000 Kalmar machines worldwide.

This reduntant CAN-bus system is proven to be excellent in functionality and reliability. The network of control nodes allows for less wiring and connectors which reduces the number of sources of error. The power-feed for each node and the transfer of control signals are independent of the other nodes, which means the risk of disruption becomes minimal. The redundant design means that there are always two paths to choose to maintain communication, which results in extra safety and reliability.

Reliability starts already at the concept stage

One of the guiding principles in designing the DCF was to minimise the number of potential sources of error. Therefore the machines consist of as few components and moving parts as possible. The functionality and operational reliability is assured by extensive testing.



To increase workplace safety the machine can be fitted with alcohol interlock.

The hydraulic system is critical

No other part of the machine is working so hard under continuous pressure. To secure the reliability we have minimised the number of hydraulic components and couplings.

To ensure optimum oil pressure and security regardless of the handling operation the hydraulic system is based on three fixed displacement vane pumps – one for the brake system, cooling and filtering, one for working hydraulics and one supporting both steering and working hydraulics.

The distribution of pressure between working hydraulics and steering is done by the priority valve which ensures that the steering always receives enough pressure. The hydraulic oil pump for load handling is disconnected during forward driving, to use the engine power to best effect.

All three pumps interact together, using the same oil tank and filters, which are located inside the tank. The system is equipped with one oil cooler and a separate fan to secure the right oil temperature, to match the hydraulic brake heat generation as well as feeding the overall system during tough handling cycles.

Oil supply and temperature control is handled through Kalmars distributed control system. All indications are presented when appropriate on the Kalmar Information Display (KID) in the cabin.

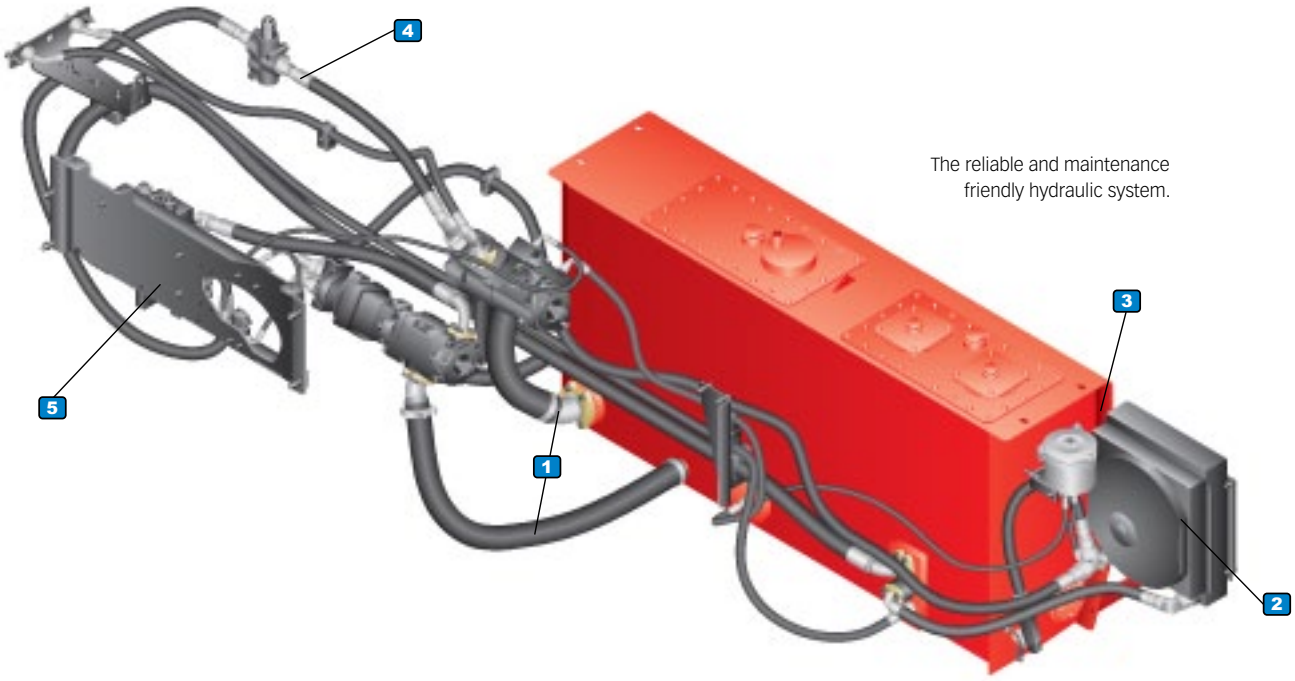

The reliable and maintenance friendly hydraulic system.

Other improving features:

1. Large dimensions of hydraulic hoses improves the hose´s lifetime (slower flow, less friction and less heating).

2. Thermostatic cooling of both the main system and the brake system improves the oil lifetime (temperature control, optimised working temperature).

3. High density filter improves the oil lifetime (clean oil).

4. ORFS – leak proof couplings all around improves reliability (minimises leakage).

5. All main hydraulic components at ground level are gathered on a separate plate, bolted to the chassis and therefore simple to remove.

Global presence and local service bring our products and solutions closer to our customer.



Cargotec *improves the efficiency of cargo flows on land and at sea – wherever cargo is on the move. Cargotec's daughter brands Hiab, Kalmar and MacGregor are recognised leaders in cargo and load handling solutions around the world. Cargotec's global network is positioned close to customers and offers extensive services that ensure the continuous, reliable and sustainable performance of equipment. Cargotec's class B shares are quoted on the NASDAQ OMX Helsinki. www.cargotec.com*

CARGOTEC

Cargotec Sweden AB
Torggatan 3
SE-340 10, Lidhult, Sweden
tel. +46 372 260 00
fax +46 372 263 90
www.cargotec.com

TI-LT52-EN-NCE / 2012.05.10