4.3 IPRO 4 DIN (IPG100D – IPG200D – IPC100E RANGES)

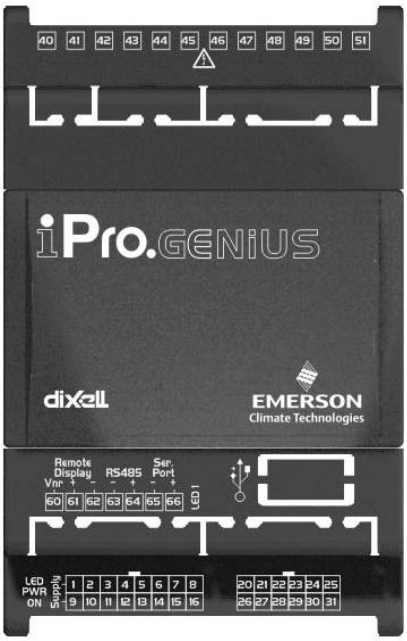

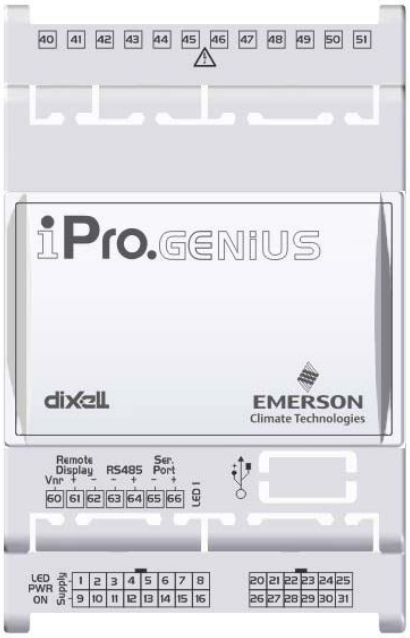

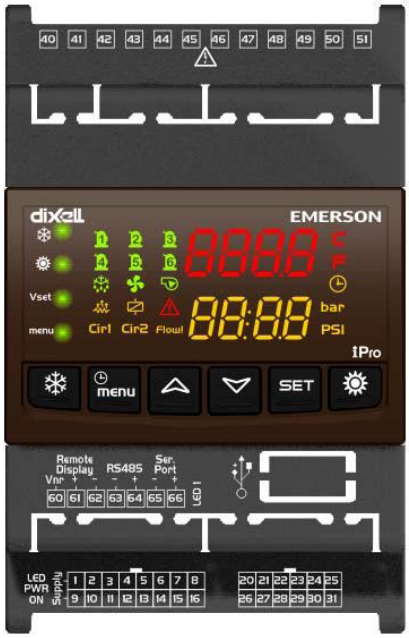

4.3.1 Description of the connections

Connector	Description
	Connector for 24Vac/dc power supply Analogue inputs (Pb1 - Pb6, PbC) Additional power (+5Vdc, +12Vdc, GND) Analogue outputs (Out1 - Out4, GND)

	24Vac/dc digital inputs (DI1 - DI11, GND)
	Connector for remote terminal (VISOGRAPH), maximum 1 terminal per iPRO. RS485 Slave connector Serial port connector (LAN or RS485)
	USB port for downloads (BIOS, ISaGRAF® application, maps of parameters, remote display applications, network configuration, website) and uploads (log files) Connection with the computer via a USB-ETH converter
	Digital relay outputs 4 NO relays, 2 common
	Digital relay outputs 4 NO relays, 2 common

4.3.2 Description of the inputs and outputs

Input No.	Type of Input	Description
1	Supply	***Reference "-"/GND power (24Vac or 24Vdc)***
2	Pb1	Configurable analogue input 1 (NTC, PTC, 0 - 20mA, 4 - 20mA, 0 - 10V, 0 - 1V, 0 - 5V, DI)
3	Pb2	Configurable analogue input 2 (NTC, PTC, 0 - 20mA, 4 - 20mA, 0 - 10V, 0 - 1V, 0 - 5V, DI)
4	Pb3	Configurable analogue input 3 (NTC, PTC, 0 - 20mA, 4 - 20mA, 0 - 10V, 0 - 1V, 0 - 5V, DI)
5	+12V	Additional power +12Vdc
6	+5V	Additional power +5Vdc
7	Out1	Analogue output 1 0 - 10V, 4 - 20mA, Relay
8	Out2	Analogue output 2 0 - 10V, 4 - 20mA, Relay
9	Supply	***Reference "+" power supply (24Vac or 24Vdc)***
10	Pb4	Configurable analogue input 4 (NTC, PTC, 0 - 20mA, 4 - 20mA, 0 - 10V, 0 - 1V, 0 - 5V, DI)
11	Pb5	Configurable analogue input 5 (NTC, PTC, 0 - 20mA, 4 - 20mA, 0 - 10V, 0 - 1V, 0 - 5V, DI)
12	Pb6	Configurable analogue input 6 (NTC, PTC, 0 - 20mA, 4 - 20mA, 0 - 10V, 0 - 1V, 0 - 5V, DI)
13	PbC	Common analogue inputs (NTC, PTC, DI)
14	GND(-)	Additional power reference 5Vdc and 12Vdc, analogue inputs (0 - 20mA, 4 - 20mA, 0 - 10V, 0 - 1V, 0 - 5V), analogue outputs
15	Out3	Analogue output 3 0 - 10V, 4 - 20mA, Relay
16	Out4	Analogue output 4 0 - 10V, 4 - 20mA, Relay
20	DI1	Digital input 1 POTENTIAL FREE
21	DI2	Digital input 2 POTENTIAL FREE
22	DI3	Digital input 3 POTENTIAL FREE
23	DI4	Digital input 4 POTENTIAL FREE
24	DI5	Digital input 5 POTENTIAL FREE
25	DI6	Digital input 6 POTENTIAL FREE
26	DI7	Digital input 7 POTENTIAL FREE
27	DI8	Digital input 8 POTENTIAL FREE
28	DI9	Digital input 9 POTENTIAL FREE
29	DI10	Digital input 10 POTENTIAL FREE
30	DI11	Digital input 11 POTENTIAL FREE
31	GND	**Common for digital inputs. There is no power supply involve in this.**
40	C	Common relays 1, 2, 3 and 4 (MAX 10A)
41	C	Common relays 1, 2, 3 and 4 (MAX 10A)
42	RL1	Relay 1 normally open contact
43	RL2	Relay 2 normally open contact

Edited with Infix PDF Editor - free for non-commercial use.
To remove this notice, visit: www.pdfediting.com

44	RL3	Relay 3 normally open contact
45	RL4	Relay 4 normally open contact
46	RL5	Relay 5 normally open contact
47	C	Common relays 5, 6, 7 and 8 (MAX 10A)
48	C	Common relays 5, 6, 7 and 8 (MAX 10A)
49	RL6	Relay 6 normally open contact
50	RL7	Relay 7 normally open contact
51	RL8	Relay 8 normally open contact
60	Remote Display	Connection for VISOGRAPH remote terminal (Vnr)
61	Remote Display	Connection for VISOGRAPH remote terminal (+)
62	Remote Display	Connection for VISOGRAPH remote terminal (-)
63	RS485 Slave	RS485 Slave connection (-)
64	RS485 Slave	RS485 Slave connection (+)
65	LAN	LAN Connection (-)
66	LAN	LAN Connection (+)

4.3.3 Technical specifications

4.3.3.1 Analogue inputs

Analogue conversion type:	10-bit A/D converter
Number of inputs:	6
Type of analogue input: **(configurable via software parameter)**	NTC Dixell (-50T110°C; 10KΩ±1% at 25°C) PTC Dixell(-55T115°C; 990Ω±1% at 25°C) Digital input (potential free contact) Voltage: 0 - V, 0 - 5V, 0 - 10V (input resistance 3.7KΩ) Current: 0 - 20mA, 4 - 20mA (input resistance 100Ω)
Digital input status variation detection time:	100ms (in any case it depends on the cycle time set by the user in the given application)
Accuracy:	NTC, PTC: ±1 0-1V: ±20mV 0-5V: ±100mV 0-10V: ±200mV
Additional power:	+12V: 200mA in total (between +12V and analogue outputs) +5v: 100mA
Notes: 	Any inputs that are powered with a voltage that differs from that supplied by the device (+12V or +5V) must be powered separately with another transformer (do not use the same secondary of the controller's power) in order to prevent the inputs from malfunctioning or being damaged.

4.3.3.2 Digital inputs

Type:	Potential free digital inputs
Number of inputs:	11
Digital input status variation detection time:	100ms (in any case it depends on the cycle time set by the user in the given application)
Notes: 	There is no power supply or external voltage involve in this. in order to prevent the inputs from malfunctioning or being damaged.

Edited with the demo version of Infix Pro PDF Editor
To remove this notice, visit: www.pdfediting.com

4.3.3.3 Analogue outputs

Type:	Non opto-insulated internal power
Number of outputs:	4
Type of analogue output: **(configurable via software parameter)**	4 configurable outputs 0-10Vdc 4-20mA (Out1 - Out4)
Maximum load:	40mA (Out1 - Out4) max with configured outputs 0-10Vdc 400Ω max with configured outputs 4-20mA 22Ω per live analogue output
Accuracy:	Out1 - Out4: ±2% full scale
Resolution:	8bit
Notes:	The electrical devices controlled by these analogue outputs must be powered separately with another transformer (do not use the same secondary of the controller's power) in order to prevent the outputs from malfunctioning or being damaged.

4.3.3.4 Digital outputs

Type:	Relays with NO contacts
Number of outputs:	8
Type of output: **(configurable via software parameter)**	Relays with normally open contact
Maximum load:	5A(250Vac) SPST 5(2)A
Notes:	Verify the capacity of the output used. There is double insulation between the digital outputs and the low voltage of the rest of the circuit. Do not use different voltages for the various groups of relays nor within each group.

4.3.3.5 Wiring diagrams

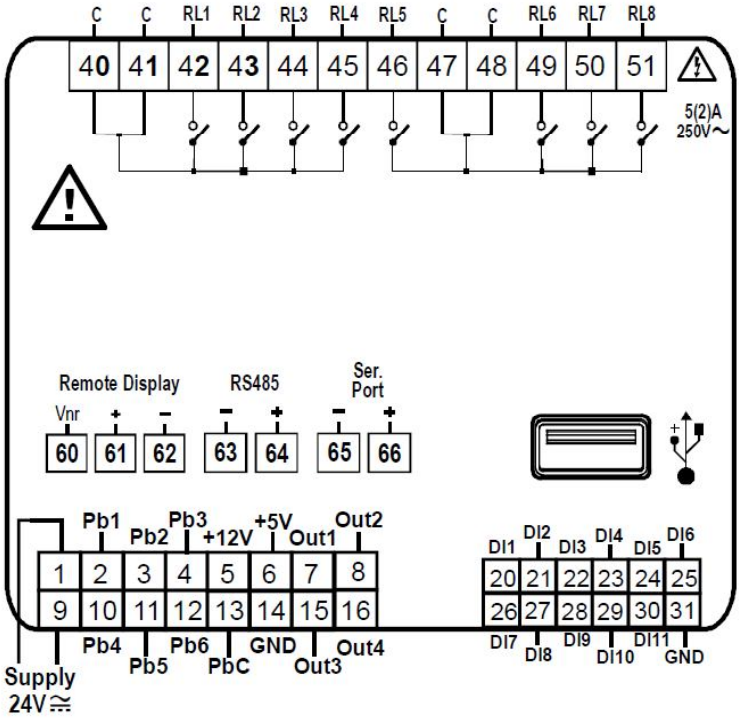

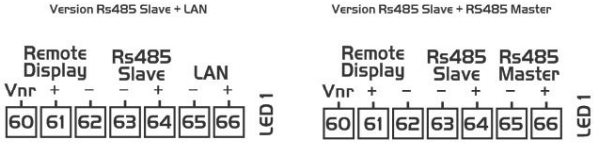

4.3.3.6 Mechanical specifications

4 DIN module

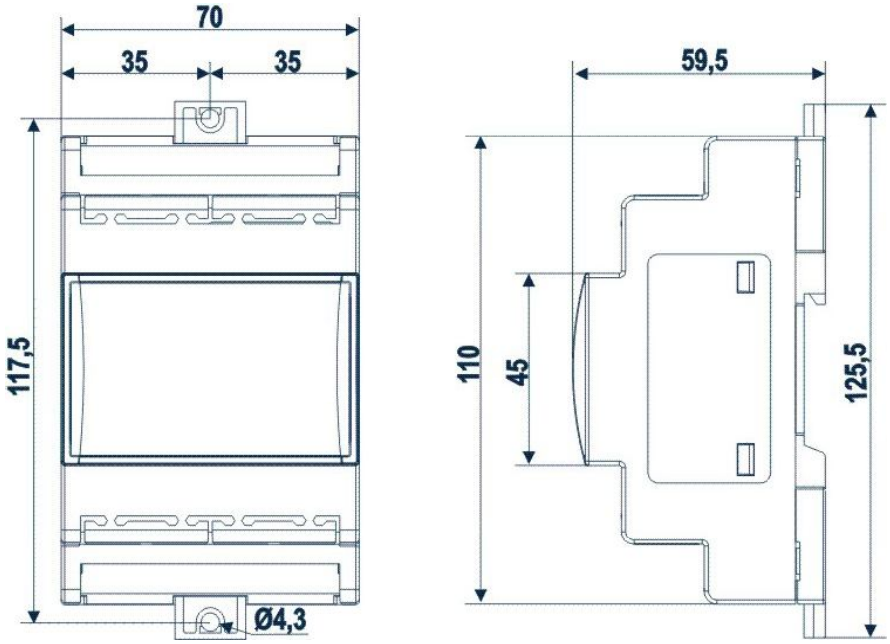

4.3.3.7 Electrical specifications

Power Supply:	24Vac +10/-15%, 50/60Hz 20 - 36Vdc
Consumption:	from 30VA (Vac), from 25W (Vdc)
Connectors:	Molex connectors with low voltage wiring (for IPS100D and IPS400D) Phoenix quick coupling connectors for low voltage (for IPS200D) STELVIO 90° screw connectors for digital outputs (250Vac, 6A max)
Microprocessor:	AT91SAM9260 32-bit 200Mhz
Permanent FLASH memory:	32MB, in 8-bit
RAM:	32MB, in 16
Internal clock:	standard

4.3.3.8 Plastic container

Mount:	On a DIN rail (EN 50022, DIN 43880) Fastened with screws via the removable plastic flaps.
Material:	PC-ABS Thermoplastic
Self-extinguishing:	V0 (UL94)
Comparative Tracking Index (CTI):	300V
Colour:	Black or White, depending on the model

4.3.3.9 USB-ETHERNET Adapter

The IPS range of programmable controllers can be connected to a computer via an external adapter. This adapter must be used in the processing environment for the application download in the ipro. This adapter is not set up for fixed or continuous connection. If the adapter should be kept connected continuously, the room temperature must not exceed 50°C.

