GERMAN POOL 德國寶

移動浴室寶
Portable Bathroom Heater

HTW-220



即時網上登記保用
Online Warranty Registration

在使用之前請詳細閱讀「使用說明書」及「保用條款」，並妥為保存。
Please read these instructions and warranty information carefully before use and keep them handy for future reference.

使 用 說 明 書 USER MANUAL

請即進行保用登記!

有關保用條款細則，請看本說明書最後一頁。

Please register your warranty information now!

For Warranty Terms & Conditions,

please refer to the last page of this user manual.

目錄

產品特點	4
注意事項	5
產品結構	6
安裝説明	7
操作説明	10
安全注意事項	11
清洗與保養	13
技術規格	14
保用條款	27

產品特點

- 便攜設計，隨心移動
- 多種簡易安裝方式：既可座檯又可掛墻安裝
- 電子控制，附設紅外線遙控器
- 高低檔暖風選擇
- 可獨立吹涼風
- PTC發熱體高效快速製暖
- 特設可拆式金屬架
- 雙重過熱保護及IP23防水等級，確保使用安全

注意事項

- 本產品並不適宜讓未滿8歲之兒童、身體或心智殘障、缺乏經驗或知識的人士操作，除非該人士得到負責保障其安全的人士的監管或指引。禁止兒童在無指引的情況下清潔或使用本機。
- 3歲以下兒童應遠離本機，除非獲得持續監管。
- 3至8歲兒童只可在得到監管並清楚了解觸電危險的情況下開啟或關閉本機，切勿進行接插電源、調控、清潔或保養等工作。
- **高溫注意！**本產品於使用時或使用後將變熱，有燙傷危險。請特別注意保護兒童及其他弱勢人群。
- **高溫注意！**本機的某些部分會變得非常熱並會導致燙傷。當兒童和身體較脆弱人士在場時，需給予特別照顧。
- 如電源線損壞或發生其他故障，必須由本公司或合資格的專業技術人員更換和維修。
- **警告！**本機不設室溫控制裝置。當有行動不便的人士在場時，除非有專人長期看管，否則切勿於空間狹小的地方使用本機。
- **警告！**請勿覆蓋本機，以免過熱造成危險。
- 嚴禁將本機直接放置於電源插座下面使用。

產品結構

主機

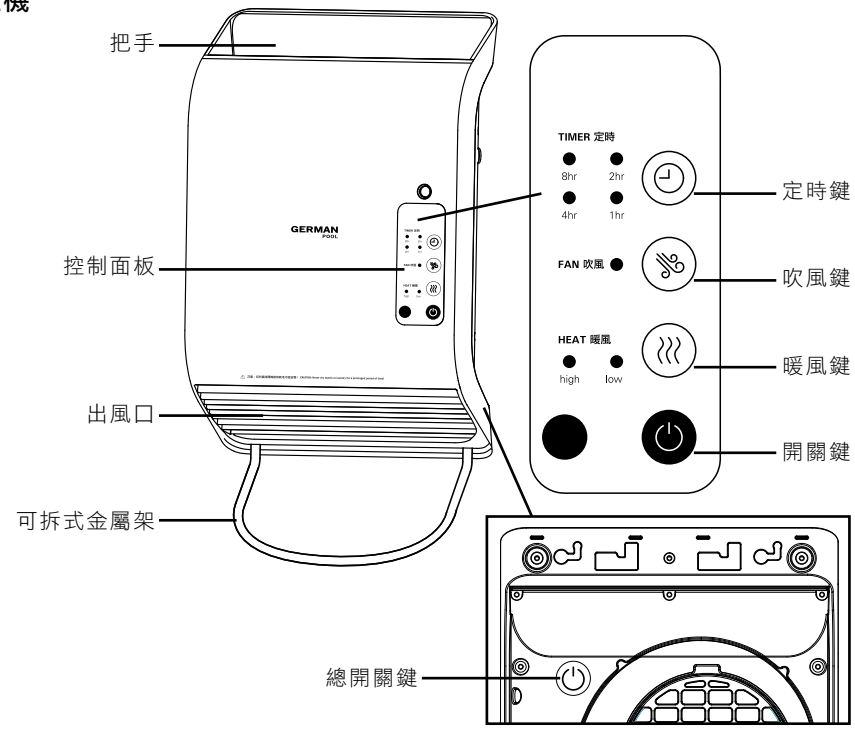

遙控器

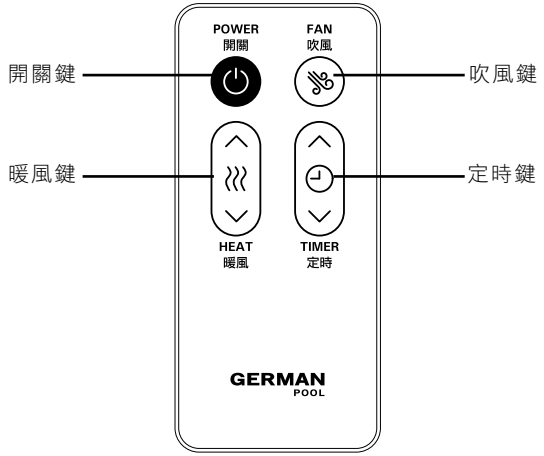

安裝説明

安裝方法

本機在起居室使用時，可選擇座檯和掛牆兩種方式；浴室使用時，必須掛牆。

（1）座檯使用：將機器平放於檯面或地面即可。（注：不可放於阻礙物和易燃物品周圍）。

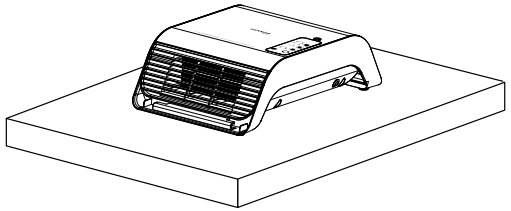

（2）掛牆使用：

① 本機結構適用於掛牆安裝，可掛於牆壁上（注：離地距離需大於1米，左側距離牆壁大於0.3米，如果在浴室使用，請確保安裝位置離水源的距離大於1米）。

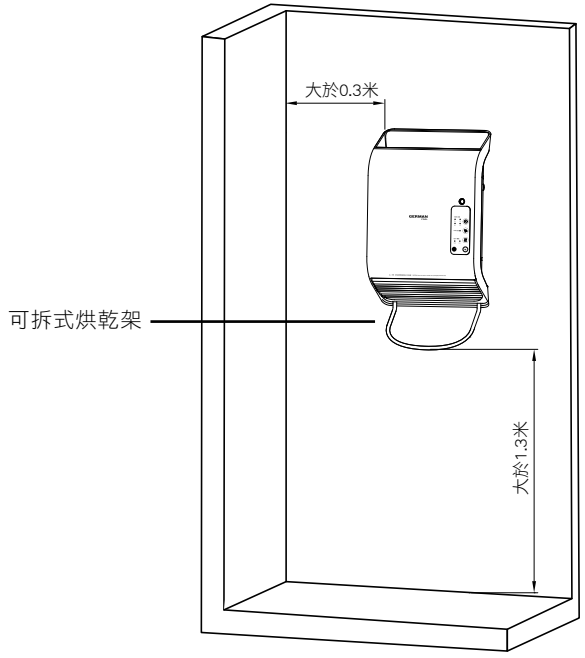

安裝說明

② 螺塞和螺絲安裝方法：

a. 在牆上鑽兩個φ6mm的螺絲孔（距離為74mm），深29mm；

b. 然後把螺塞插入牆壁的孔中；

c. 把螺絲穿過掛牆鉤並插入螺塞中，擰緊螺絲即可。

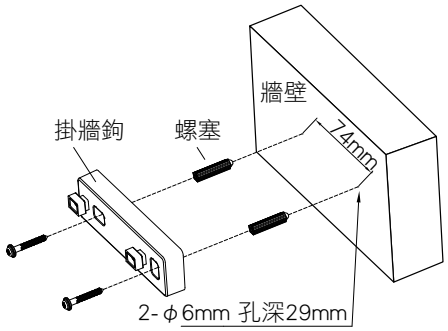

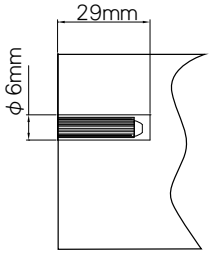

將螺塞打入牆壁

③ 安裝機器：把掛牆方孔（大孔）對準掛牆鉤，然後右移至小孔。

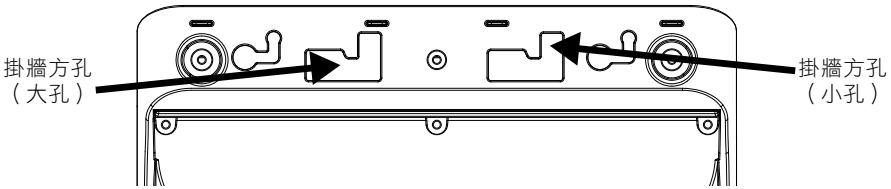

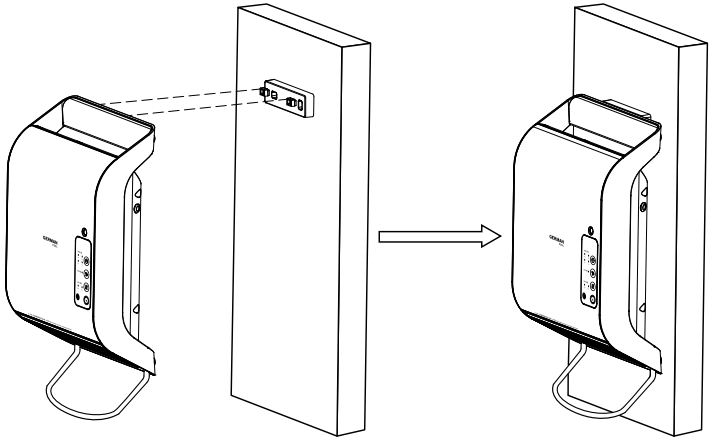

安裝說明

（3）掛鉤安裝：把掛牆方孔（大孔）對準掛鉤，然後右移至小孔。

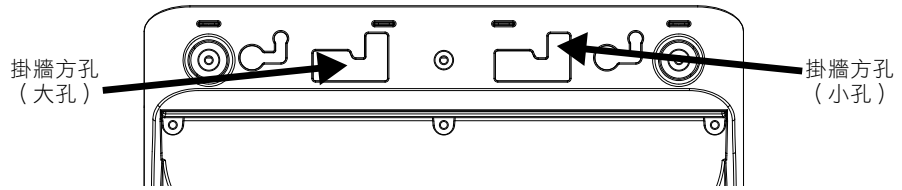

將掛鉤活動擋片對準毛巾架，往前推，扣入毛巾架，此時掛鉤張開；待掛鉤活動擋片閉合後即可。

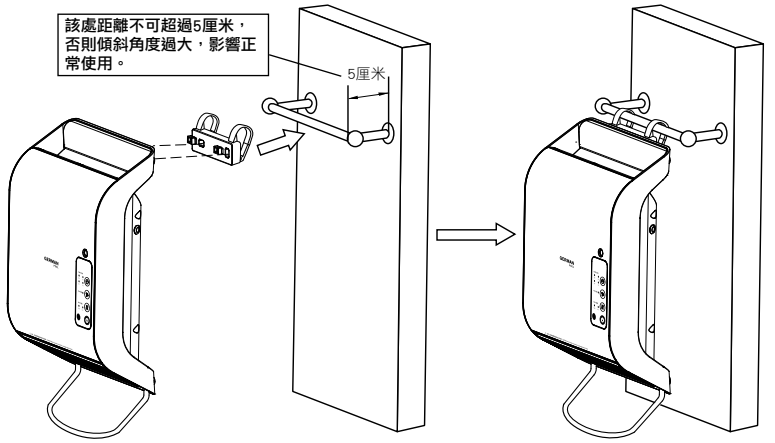

（4）可拆式金屬架安裝方法：將金屬架放入出風柵底部兩側槽內，然後左右側均往外拉卡住金屬架即可；當不使用金屬架時，左右側往裡推即可拆卸下金屬架。

安裝

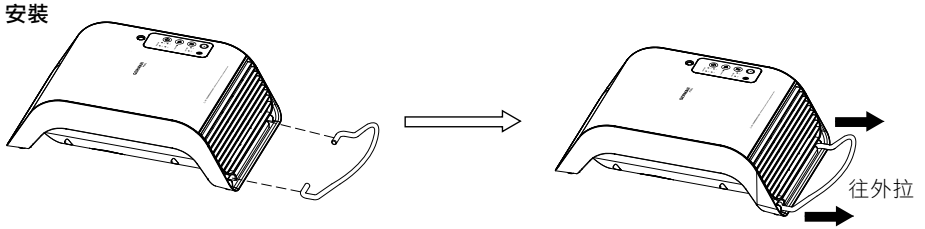

拆卸

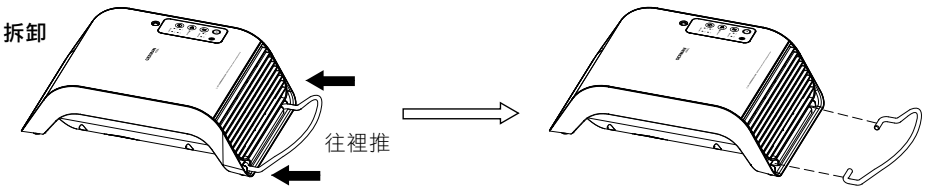

操作説明

注意：本機內置風扇散熱功能，只要PTC發熱體啟動運作，風扇亦將啟動運作。每當PTC發熱體停止工作時，風扇將繼續工作10秒後停止。

觀看操作視頻

1. 插上電源後，打開機身底面的總開關鍵，機器發出提示音，進入待機狀態，其他功能及指示燈熄滅。
2. 待機狀態下按除 開關鍵以外的其他按鍵均無效，按 開關鍵開機，再按一次關機，開機之後的狀態預設為：
   - PTC發熱體：以低檔位（環保模式）運行，LOW指示燈亮起。HIGH指示燈不亮。
   - 吹風（FAN）指示燈不亮。
   - 定時指示燈不亮，即機器處於不定時運作狀態。
3. 開機狀態下，按 暖風鍵一次，功率由低檔轉成高檔，再按一次回到低檔，依此循環。
   - 低檔-環保模式：LOW指示燈亮起。
   - 高檔-強勁模式：HIGH指示燈亮起。
4. 開機狀態下，按 吹風鍵一次，吹風指示燈亮起，PTC發熱體停止工作，風扇一直開啟。 再按一次，吹風指示燈熄滅，暖風功能開啟，恢復原工作檔位狀態。
5. 開機狀態下，按 定時鍵進行定時功能設置。
   - 按一次 定時鍵，定時設置為1小時，再按依次為2小時，4小時，8小時,無定時循環。
   - 定時設置後立即開始計時，到達設置的時間後關機，進入待機狀態。

安全注意事項

為避免操作失誤帶來的危險及更方便使用本機，下面用圖示的形式給出幾種注意事項。在熟悉下面圖示內容的情況下，閱讀產品使用説明書。

符號説明

禁止	表示不能進行的內容
必須執行	表示務必執行的內容
禁止拆卸	表示不可拆卸否則會導致危險
禁止觸摸	表示不可觸摸否則會導致危險
注意觸電	表示有觸電危險

● 若產品發生故障，請送往售後服務及維修中心，請勿擅自拆卸、更換零部件。
■ 隨意拆卸、改造都會影響產品的安全性。

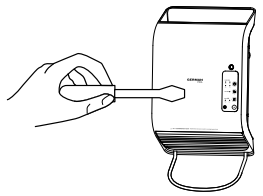

禁止拆卸

● 切勿用濕手觸摸電源線插頭。
■ 有觸電危險！

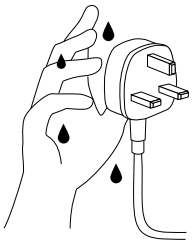

注意觸電 禁止觸摸

● 嚴禁將手指或木棍、金屬棍等任何異物塞入進、出風口。
■ 會導致人身危險、漏電、短路及產品損壞的可能。

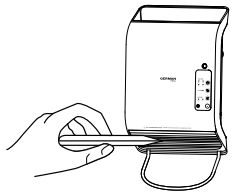

注意觸電 禁止

● 請勿在產品周圍噴灑殺蟲劑及可燃性噴霧劑。
■ 可能使產品受損。

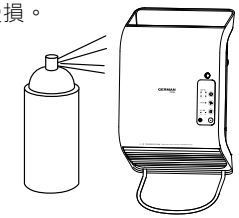

禁止

● 避免將產品出風口長時間、直接向幼兒吹風。
■ 會導致幼兒生病或影響健康的可能。



禁止

● 拔掉電源線插頭時，請勿拉扯電線。
■ 會導致電源線受損，漏電等危險。

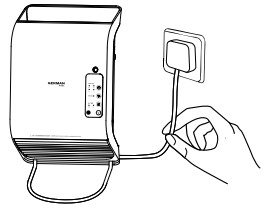

注意觸電 禁止

安全注意事項

● 確保電源線插頭未粘異物，並將插頭完全插入。 ■ 否則會導致漏電的危險。 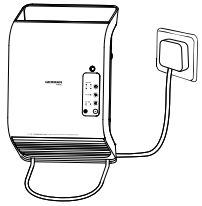 注意觸電 必須執行	● 異常處理 ■ 當產品在使用中出現異味、雜音時，請立即停止使用，並拔掉電源線。 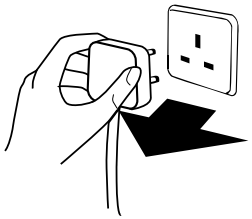 必須執行
● 若電源線有裸露或有損壞時，請勿使用。 ■ 會導致漏電短路及引起火災的危險。 ■ 如果電源線損壞，為了避免危險，必須由製造商、其維修部或類似部門的專業人員更換。 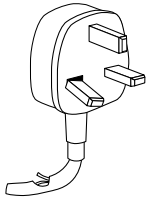 注意觸電 必須執行	● 請勿折疊或將重物放置到電源線上。 ■ 會導致漏電的危險。 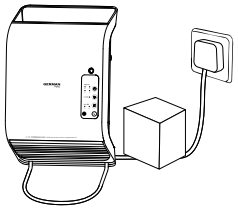 注意觸電 必須執行
● 外出或長時間不使用本機時，必須關機，並將電源線插頭從插座中拔出。 ● 當有小孩、動物或行動不便缺乏自制能力的人在場而無人看護時，應避免使用本機。 必須執行	● 使用本機，必須使用經檢查符合要求的合格電源插座。且插座的承載能力不得低於10A/220-240V。 ● 必須確保使用的電源電壓與本機銘牌指定的電壓（AC220-240V）一致。 ● 搬遷時請確認使用電壓。 必須執行
● 嚴禁在浴缸、花灑或游泳池的四周使用本機。 ● 嚴禁將本機直接放置於電源插座下面使用。 ● 產品使用時，不可將機體靠近牆壁、窗簾等可燃材料，有引起火災的可能。 禁止	● 為避免過熱，禁止覆蓋加熱器。 ● 嚴禁將物品放置在機體上。 禁止

清潔與保養

1. 進行維護與保養前，請先將電源線插頭拔下，並且在浴室寶冷卻後才可以進行。
2. 外表面積塵時，要用軟布擦拭：當表面太髒時，可用低於50°C的水和中性洗滌劑混合後，用軟布擦拭並晾乾。
3. 清潔時，不能使用汽油、天拿水、稀釋劑及任何容易損壞外表面的化學用品。
4. 儲存時應先待機器冷卻、吹乾，包裝好後存放於乾燥通風處。
5. 關機時，建議先使用吹風功能吹1-3分鐘，待機器冷透。

觀看操作視頻

技術規格

型號	HTW-220
電壓	220-240 V
頻率	50 Hz
功率	2,000W
噪音	≤55 dB
外型尺寸	(H) 388 mm (W) 250 mm (D) 123.5 mm
淨重	1.90 kg

產品規格及設計如有變更，恕不另行通知。
中英文版本如有出入，一概以中文版為準。
本產品使用說明書以 www.germanpool.com 網上版為最新版本。

Content

Product Features 16

Attention 17

Product Structure 18

Installation 19

Operating Instructions 22

Safety Precautions 23

Care and Maintenance 25

Technical Specifications 26

Terms & Warranty 27

Product Features

- Portable design for easy manoeuvre
- Multiple installation modes: on desk and wall-mount
- Digital control, infrared remote included
- High power and low power heating mode
- Independent cooling fan mode
- High quality PTC ceramic heating element
- Detachable metal rail for hanging and drying towels
- Dual overheat protection and IP23 waterproof rating

Attention

- The appliance is not intended for persons (including children under 8 years old) with reduced physical or mental capabilities, or any individual lacking in experience and expertise, unless they are under the supervision or instruction of qualified personnel. Children shall not clean or use the appliance without supervision.
- Children younger than 3 years old should be kept away from the appliance unless they are continuously supervised.
- Only provided that children at the age of 3 to 8 have been given supervision and have understood the hazard of electric shock, can they switch on/off the appliance. They should never plug in, operate, clean and maintain the appliance.
- **CAUTION**: The appliance will become very hot and could cause burns while or after using it. Particular attention has to be given to children and other vulnerable people.
- **CAUTION**: Some parts of this product can become very hot and cause burns. Particular attention has to be given where children and vulnerable people are present.
- If the supply cord is damaged or other malfunctions occur, the appliance must be replaced or repaired by the manufacturer or qualified technicians.
- **WARNING:** In order to avoid dangers caused by overheating, do not cover the heater.
- **WARNING:** This heater is not equipped with a device to control the room temperature. Do not use this heater in small rooms when they are occupied by persons not capable of leaving the room on their own, unless constant supervision is provided.
- Do not use the heater directly below the power socket.

Product Structure

Main Body

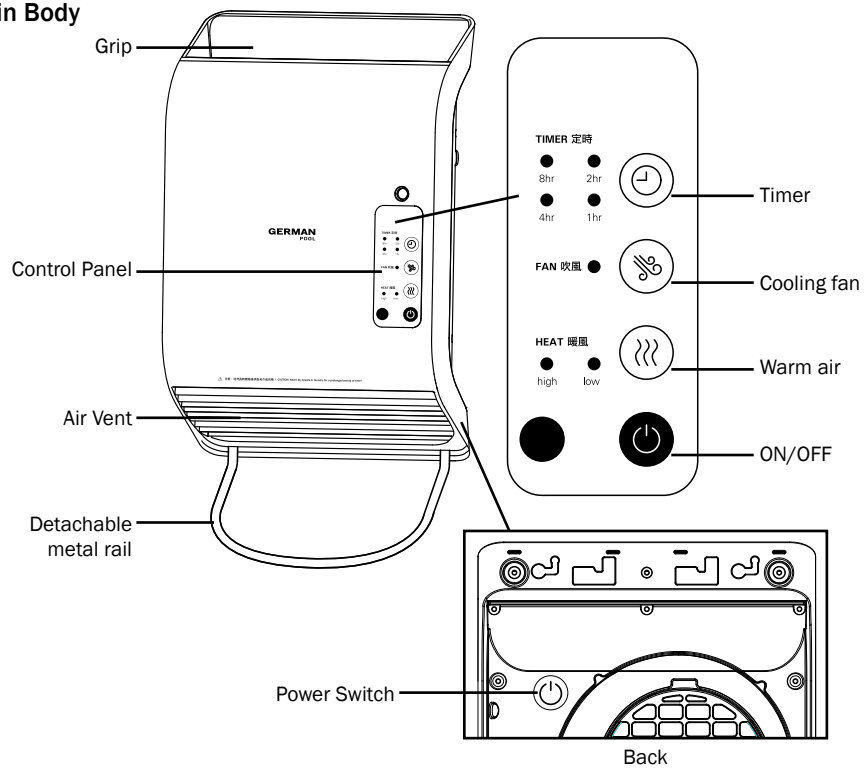

Remote Control

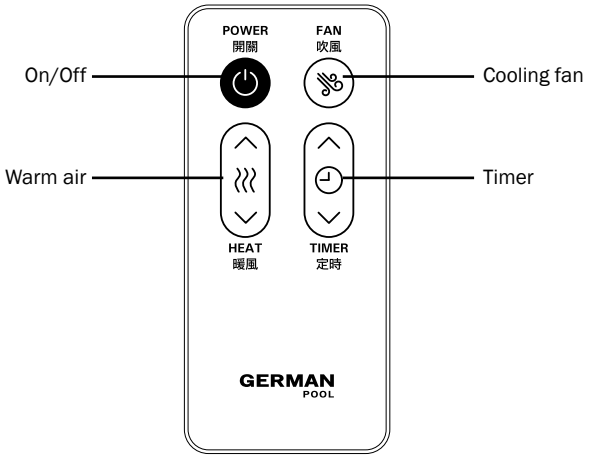

Installation

Installation

When it is used in the living-room, the machine could be placed on desk/floor or mounted on wall. It has to be mounted on wall when used in the bathroom.

(1) On Desk/floor:

Lay the machine on desk/floor directly. (Note: do not place it near any barriers / flammable materials.)

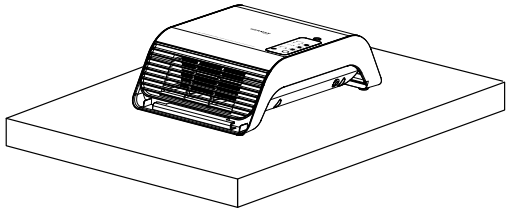

(2) Wall-Mount:

① The machine can be mounted on wall. (Note: height above the ground should be higher than 1 meter and distance to the left sidewall should be more than 0.3 meter. If it is used in the bathroom, it should be at least 1 meter away from the water source)

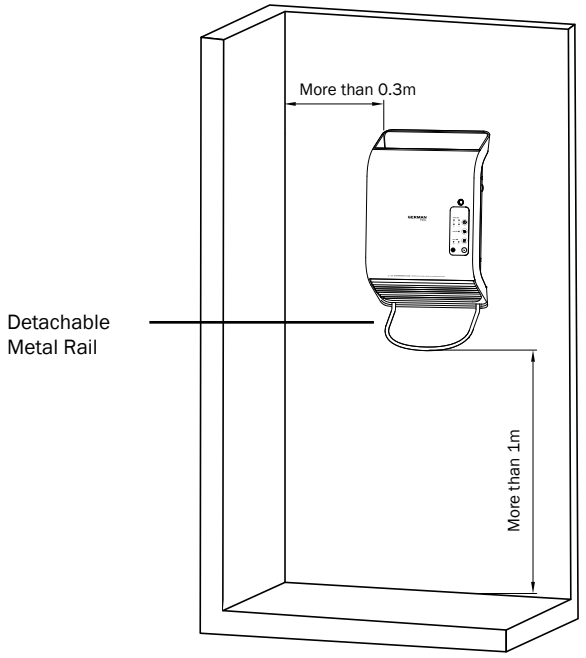

② Installing the screw plugs and screws:

a)Drill two 6mm holes (29mm in depth) on the wall. The distance between them should be 74mm.

b)Insert the screw plugs into the holes.

c)Insert the screws through the wall hook, insert them into the screw plugs and screw them.

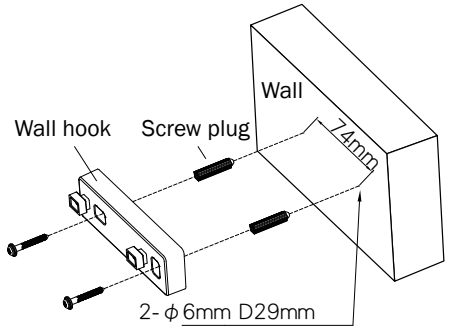

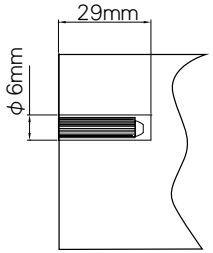

Insert the screw plugs into the holes

③ Attach the machine on the hook through the large mounting hole and securely mount it by moving right to the position of the small mounting hole.

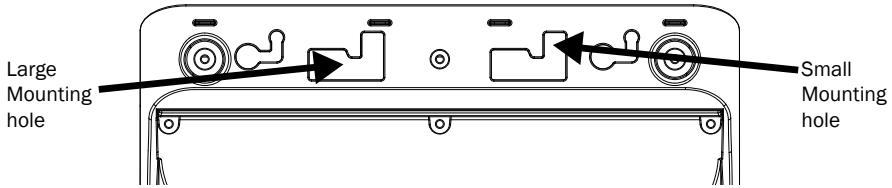

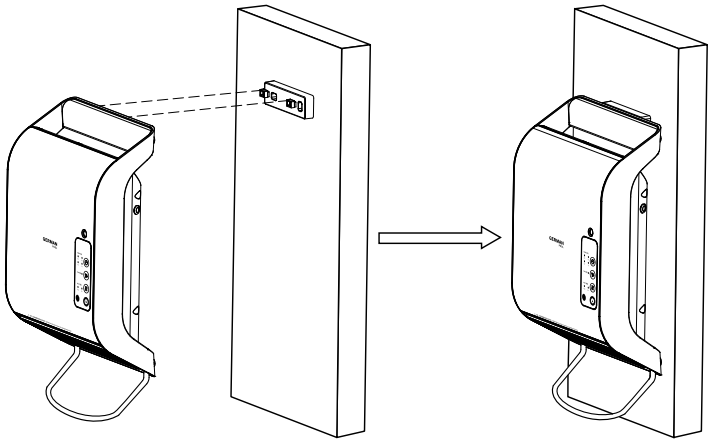

(3) **Hook-mounting:** Attach the machine on the hook through the large mounting hole and securely mount it by moving right to the position of the small mounting hole.

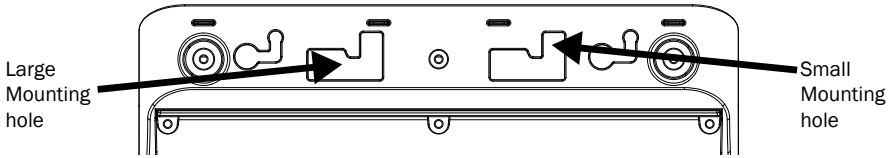

Place the mounting plate against the towel rail / rack and then push it to hook the heater onto the metal towel hanger. Close the loop of the hook to securely mount it onto the rail / rack.

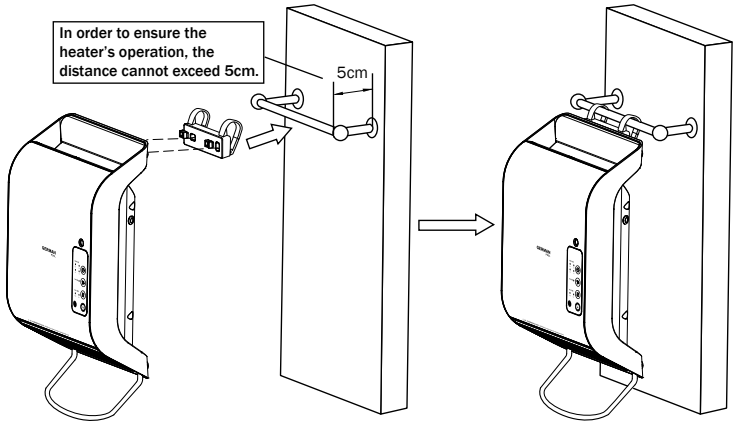

(4) **Mounting the metal rail:** insert the ends of the metal rail into the slots located on two sides of the air vent, and then gently pull it while moving it left and right until it is securely fixed. If the metal rail is no longer needed, gently push it while moving it left and right to detach it.

Installation

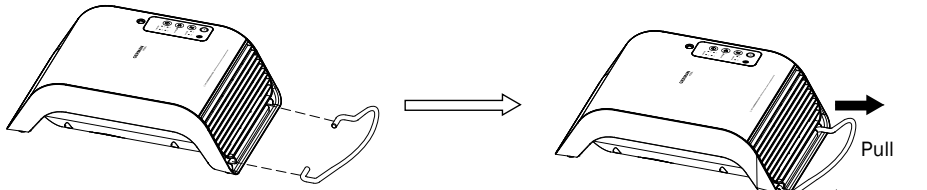

Removal

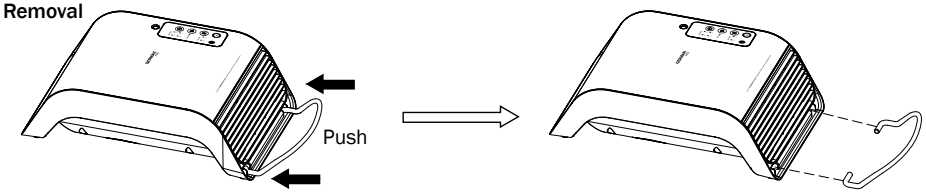

Operating Instructions

Attention: the device is equipped with an internal fan for heat dissipation. As long as the PTC ceramic heating element is working, the fan will keep operating. The fan will continue to operate for 10 seconds after PTC stops working.

Watch the video clip

1. Connect to AC source, turn on the switch located at the bottom of the machine. A sound will be emitted and the machine will enter standby mode.
2. On standby mode, only the On/Off button is functional. Press button to turn on the machine, press it again to switch off the device. Upon powering the machine, the default mode is set as:
   - PTC Heating Element: On low power (eco mode) with LOW indicator on and HIGH indicator off.
   - FAN indicator is off.
   - TIMER indicator is off, and the machine is on continuous mode.
3. When the machine is on, press "warm air" button to switch from low power to high power. Pressing button again will switch back to low power.
   - Low power – eco mode: LOW indicator lights up
   - High power – powerful mode: HIGH indicator lights up
4. When the machine is on, press the cooling fan button and the FAN indicator lights up. The heating element is turned off while the fan keeps operating. Press it again and the FAN indicator goes out. The heating function will be run on previous working mode.
5. When the machine is on, press timer button to set the timer.
   - Press the button to choose among "1h, 2h, 4h, 8h".
   - The timer starts immediately after setting the work time. Once the timer ends, the machine will be automatically switched off and enter standby mode.

Safety Precautions

In order to operate the machine more effectively and avoid any hazards caused by improper usage, the following precautions will be presented graphically. Read the operating instructions based on those symbols.

Symbol introduction

Forbidden	Actions that are strictly prohibited.
Mandatory	The content or actions must be executed as said.
No disassembly	Disassembly or replacement of components is not allowed.
No touching	Do not touch the concerned components with bare hand.
Electric Shock Risk	Electric shock may occur.

- Any indication of malfunction should contact Repairs and Customer Service Center. Do not attempt to disassemble the product or replace faulty parts without authorization.
- ■ Arbitrary disassembly or modification will affect the safety of the unit.

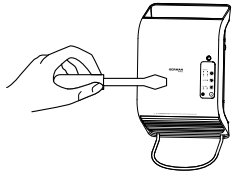

- Do not touch the unit with a wet hand.
- ■ Otherwise, electric shock may result.

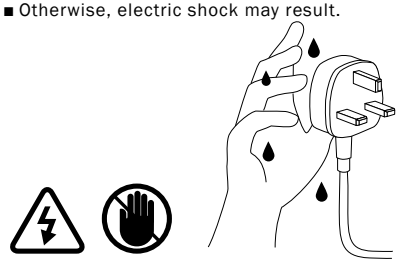

- Do not stick wooden sticks, metal sticks, or any other objects into the air intake and air outlet of the heater.
- ■ Otherwise physical dangers, leakage of electricity, short circuit and damage to the heater may result.

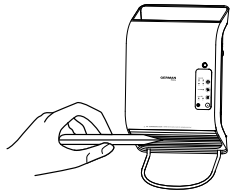

- Do not use pesticide or other flammable spray around the product.
- ■ Otherwise, it may damage the heater.

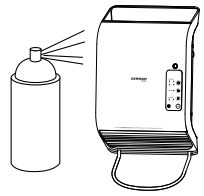

- Keep your baby away from the wind outlet as it may affect their physical well-being.



- Do not pull the cord to unplug the appliance.
- ■ Otherwise damage to the cord or leakage of electricity may result.

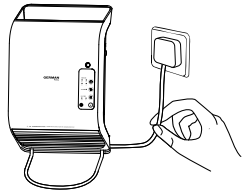

Safety Precautions

- Make sure the power plug is not stained with any abnormal items and is securely plugged into the socket.
- Otherwise leakage of electricity may result.

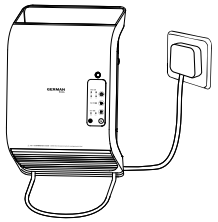

- Handling of abnormal situation
- When an abnormal scent or sound is detected during operation, stop running the heater and unplug it immediately.

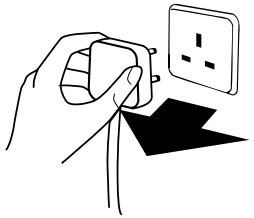

- Do not use the appliance if the power cord is laid bare or damaged.
- Otherwise it may result in leakage of electricity, short circuit and fire.
- To avoid any danger, if the cord is damaged, it must be replaced by the manufacturer, by an authorized repair center or by other qualified technicians.

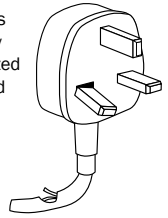

- Do not fold the power cord or place heavy objects on it.
- Otherwise leakage of electricity may result.

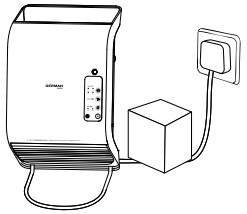

- Power off the device and unplug the power cord if it is not in use.
- Avoid using the device if there is any unattended child, animal, disabled people or people who lack self-control.

- Using the power outlet that meets the inspection requirements and the carrying capacity of the socket is no less than 10A/ 220 - 240V.
- Ensure the power supply voltage is consistent with the specified voltage of the machine (AC220 - 240V).
- Confirm the service voltage before relocation.

- Do not use the device around the tub, sprinkler or swimming pool.
- Do not use the device directly below the power outlet.
- Do not place the device close to walls, curtains or other combustible materials, otherwise it may cause fire.

- To avoid overheating, do not cover the heater.
- Never place any objects on the heater.

Care and Maintenance

Watch the video clip

1. Make sure that the heater is switched off and allowed to cool down before performing maintenance.
2. Wipe the surface of the heater with a soft cloth. If the surface is too dirty, use a mixture of water below 50°C and neutral detergent to wipe it clean with a soft cloth. Allow it to be air-dried.
3. Do not use any substances that can blemish the heater surface to clean the device, such as petrol, thinner and diluents.
4. Make sure the device is allowed to cool down and be dried properly before packing it for storage. Store it in a dry and ventilated location.
5. Before powering off the machine, it is recommended to use the cooling fan for 1 – 3 minutes to cool down the heater.

Technical Specifications

Model	HTW-220
Voltage	220-240 V
Frequency	50 Hz
Power	2,000W
Noice	≤55 dB
Dimensions	(H) 388 mm (W) 250 mm (D) 123.5 mm
Net Weight	1.90 kg

Specifications are subject to change without prior notice.
If there is any inconsistency or ambiguity between the English version and the Chinese version, the Chinese version shall prevail.
Refer to www.germanpool.com for the most up-to-date version of the Operating Instructions.

保用條款

此保用提供德國寶產品之機件在正常使用下壹年保用(自購買日起計算)。

* 貴戶須在購機十天內，以下列其中一種方式向本公司登記資料，保用手續方正式生效:

1) 填妥本公司網頁內之保用登記表格
www.germanpool.com/warranty

2) 填妥保用登記卡，郵寄至本公司。

Warranty Terms & Conditions

Under normal operations, the product will gurantee a 1-year full warranty provided by German Pool (effective from the date of purchase).

* This warranty is not valid until customer registration information is received by our Service Centre within 10 days of purchase via one of the following means:

1) Visit our website and register online:
www.germanpool.com/warranty

2) Complete all the fields on the attached Warranty Card and mail it back to our Customer Service Centre.

另請填妥以下表格並與正本發票一併保存，以便維修時核對資料。用戶提供之所有資料必須正確無誤，否則免費保用將會無效。
Please fill out the form below. This information and the original purchase invoice will be required for any repairs. Warranty will be invalidated if information provided is found to be inaccurate.

型號 Model No. : **HTW-220**

機身號碼 Serial No. : _____ 發票號碼 Invoice No. : _____

購買商號 Purchased From : _____ 購買日期 Purchase Date : _____

1. 未能出示購買發票正本者，將不獲免費維修服務。
2. 用戶應依照說明書的指示操作。本保用並不包括:
   - 上門安裝、檢驗、維修或更換零件之人工以及一切運輸費用;
   - 因天然與人為意外造成的損壞 (包括運輸及其他);
   - 電源接合不當、不依說明書而錯誤或疏忽使用本機所引致之損壞。
3. 於下列情況下，用戶之保用資格將被取消:
   - 購買發票有任何非認可之刪改;
   - 產品被用作商業或工業用途;
   - 產品經非認可之技術人員改裝或加裝任何配件;
   - 機身編號被擅自塗改、破壞或刪除。
4. 總代理有權選擇維修或更換配件或其損壞部份。
5. 產品一經被轉讓，其保用即被視作無效。

1. Customer who fails to present original purchase invoice will not be eligible for free warranty service.
2. Customer should always follow the operating instructions. This warranty does not apply to:
   - labour costs for on-site installation, check-up, repair, replacement of parts and other transportation costs;
   - damages caused by accidents of any kind (including material transfer and others);
   - operating failures resulting from applying incorrect voltage, improper usage, and unauthorized installations or repairs.
3. This warranty is invalid if:
   - the purchase invoice is modified by an unauthorized party;
   - the product is used for any commercial or industrial purposes;
   - the product is repaired or modified by unauthorized personnel, or unauthorized parts are installed;
   - the serial number is modified, damaged or removed from the product.
4. German Pool will, at its discretion, repair or replace any defective part.
5. This warranty will be void if there is any transfer of ownership from the original purchaser.

客戶服務及維修中心

香港

九龍灣啟興道1-3號
九龍貨倉10樓
電話：+852 2333 6249
傳真：+852 2356 9798
電郵：repairs@germanpool.com

澳門

澳門俾利喇街145號
寶豐工業大廈3樓
電話：+853 2875 2699
傳真：+853 2875 2661

Customer Service & Repair Centre

Hong Kong

10/F, Kowloon Godown
1-3 Kai Hing Road, Kowloon Bay,
Kowloon, Hong Kong
Tel : +852 2333 6249
Fax : +852 2356 9798
Email : repairs@germanpool.com

Macau

3/F, Edificio Industrial Pou Fung,
145 Rua de Francisco Xavier Pereira,
Macau
Tel : +853 2875 2699
Fax : +853 2875 2661

此保用只適用於香港及澳門 | This warranty is valid only in Hong Kong and Macau

GERMAN POOL

德國寶（香港）有限公司 German Pool (Hong Kong) Limited

香港
Hong Kong
香港九龍土瓜灣馬頭角道116號
新寶工商中心2期113號室
Room 113. Newport Centre Phase II. 116 Ma Tau Kok Road. Tokwawan. Kowloon. Hong Kong.
電話 Tel: +852 2773 2888
傳真 Fax:+852 2765 8215

中國
China
廣東省佛山市順德區
大良五沙工業區新翔路8號
8th, Xinxiang Road, Wusha Industrial Park, Daliang, Shunde, Foshan, Guangdong
電話 Tel:+86 757 2388 1896
傳真 Fax:+86 757 2980 8349

澳門
Macau
澳門俾利喇街145號
寶豐工業大廈3樓
3/F, Edificio Industrial Pou Fung,
145 Rua de Francisco Xavier Pereira, Macau
電話 Tel:+853 2875 2699
傳真 Fax:+853 2875 2661

香港《S MARK》安全認證 | 中國模標/家電行業十大影響力品牌 | CEO非凡品牌大賞 | 香港優質商號 | 香港工商業獎 | 2007 最具潛質創建品牌企業獎 | 香港中小企業最佳拍檔大獎 | 香港消費者推崇品牌 | 香港《Q標》優質服務證書 | 香港名牌十年成就獎 HONG KONG TOP BRAND TEN YEAR ACHIEVEMENT AWARD

© 版權所有。未獲德國寶授權，不得翻印、複製或使用本說明書作任何商業用途，違者必究。
© All rights reserved. Copying, reproducing or using the contents of this manual is not allowed without prior authorization from German Pool, violators will be prosecuted.

www.germanpool.com