WINBOT 8

EN Instruction Manual

ECOVACS
ROBOTICS

Congratulations on the purchase of your ECOVACS Robotics WINBOT! We hope it brings you many years of satisfaction. We trust the purchase of your new robot will help keep your home clean and provide you more quality time to do other things.
Live Smart. Enjoy Life.

Should you encounter situations that have not been properly addressed in this Instruction Manual, please contact our Customer Service Center where a technician can address your specific problem or question.

For more information, please visit the ECOVACS official website: **www.ecovacs.com**

The company reserves the right to make technological and/or design changes to this product for continuous improvement.

Thank you for choosing WINBOT!

Contents

1. Important Safety Instructions.....2

2. Package Contents and Technical Specifications.....4

2.1 Package Contents.....4

2.2 Specifications.....4

2.3 Product Diagram.....5

3. Operating the Robot.....6

3.1 Notes before Cleaning.....6

3.2 Attach Cleaning Pad.....7

3.3 Assemble Power Adapter.....7

3.4 Install Safety Tether.....7

3.5 Place Safety Pod.....9

3.6 Spray Cleaning Solution.....9

3.7 Start.....10

3.8 Pause.....11

3.9 Stop.....12

4. Maintenance.....13

4.1 Cleaning Pad.....13

4.2 Fan and Sensors.....13

4.3 Driving Treads.....14

5. Status Indicator Light and Sounds.....14

6. Troubleshooting.....15

1. Important Safety Instructions

When using an electrical appliance, basic precautions should always be followed, including the following:

READ ALL INSTRUCTIONS BEFORE USING THIS APPLIANCE.

SAVE THESE INSTRUCTIONS

1. This Appliance is not intended to be used by children under 8 or anyone lacking knowledge on proper use. Supervision may be necessary. Do not allow children to play with the Appliance.
2. Do not use the Appliance in extremely hot or cold environments (below 0˚C/32˚F or above 40˚C/104˚F). The Appliance can be used to clean outside windows if it is properly tethered to the Safety Pod, winds are calm, and it is not raining or snowing.
3. Please ensure the Appliance is plugged in while it is cleaning. The Appliance has a Back-Up Battery that charges during use. The Back-Up Battery powers the Appliance if it becomes unplugged or the electricity fails.
4. Do not leave the Appliance unattended when it is plugged in.
5. For household use ONLY. Do not use the Appliance in commercial or industrial environments.
6. Do not use the Appliance on cracked glass.
7. Only use accessories recommended or supplied by the manufacturer. Only use the Power Adapter supplied by the manufacturer.
8. Please make sure your power supply voltage matches the power voltage marked on the Power Adapter.
9. Do not use the Appliance on a framed window with a frame smaller than 5mm (0.2 inches).
10. Do not use the Appliance on wet or greasy windows.
11. Store the Appliance away from heat and flammable materials.
12. Do not use the Appliance if it does not firmly attach to the glass or has visible signs of damage.
13. To reduce the risk of electrical shock, do not put the Appliance in water or other liquid. Do not place or store Appliance where it can fall or be pulled into a tub or sink.
14. Do not touch power plug or the Appliance with wet hands.
15. Do not charge the Appliance in extremely hot or cold environments, or it may affect battery life span.
16. When charging the Appliance, do not place it on other electrical appliances and keep it away from fire and liquid.
17. Take care not to damage the power cord. Do not pull on or carry the Appliance by the power cord, use the power cord as a handle, close a window on the power cord, or put heavy weights on the power cord. Keep power cord away from hot surfaces.
18. Do not use with a damaged power cord or receptacle. Do not use the Appliance if it is not working properly, has been dropped, damaged, or come in contact with water. It must be repaired by the manufacturer or its service agent in order to avoid a hazard.
19. If the supply cord is damaged, it must be replaced by the manufacturer or its service agent in order to avoid a hazard.
20. The plug must be removed from the receptacle before cleaning or maintaining the Appliance. Do not unplug the Power Adapter by pulling on the power cord.
21. The Back-Up Battery must be replaced by the manufacturer or its service agent in order to avoid a hazard.
22. The Back-Up Battery must be removed and discarded according to local laws and regulations before disposal of the Appliance.
23. The Appliance must be disconnected from the receptacle before removing the battery for disposal of the Appliance.

1. Important Safety Instructions

24. Please dispose of used batteries according to local laws and regulations.
25. Do not incinerate the Appliance even if it is severely damaged. The battery can explode in a fire.
26. The Appliance must be used in accordance with the directions in this Instruction Manual. The company cannot be held liable or responsible for any damages or injuries caused by improper use.

For EU Countries

Correct Disposal of this product

This marking indicates that this product should not be disposed of with other household waste throughout the EU. To prevent possible harm to the environment or human health from uncontrolled waste disposal, recycle it responsibly to promote the sustainable reuse of material resources. To recycle your used device, please use the return and collection systems or contact the retailer where the product was purchased. They can safely recycle this product.

2. Package Contents and Technical Specifications

2.1 Package Contents

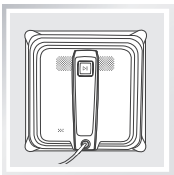

Robot

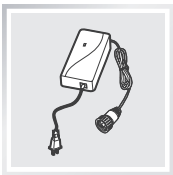

Power Adapter

Instruction Manual

Safety Pod and Tether

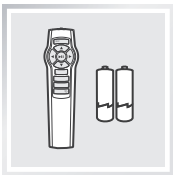

Remote Control with Batteries

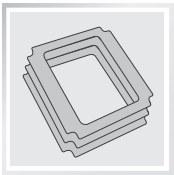

(3) Cleaning Pads

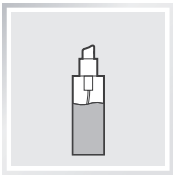

WINBOT Cleaning Solution

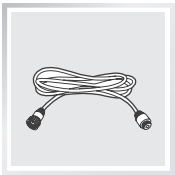

(1) WINBOT Extension Cord (1.5m/4’11”)

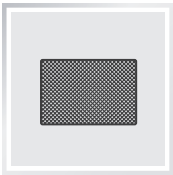

Finishing Cloth

2.2 Specifications

Model	**W830**		
Working Voltage	24V DC	Rated Power	75W
Remote Control			
Input Voltage		3V DC	
Power Adapter:EA10952			
Input: 100-240V AC 50/60Hz 2.5A		Output: 24V DC 3.75A	

* Technical and design specifications may be changed in the course of continuous product improvement.

2. Package Contents and Technical Specifications

2.3 Product Diagram

Robot

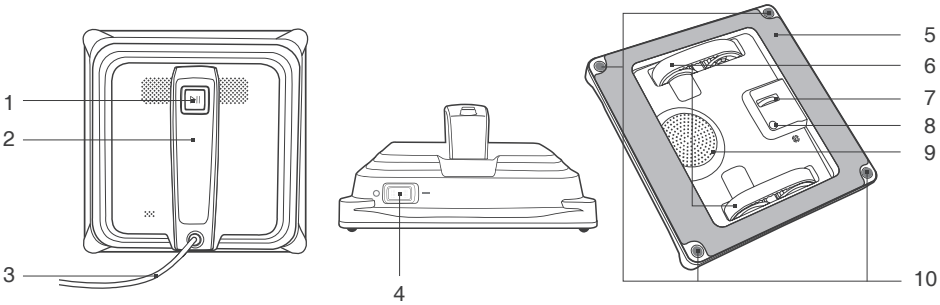

1. Status Indicator Light and START/PAUSE Button
2. Handle
3. Power Cord
4. Power Switch
5. Cleaning Pad
6. Driving Treads
7. Wheel Sensor
8. Bottom Status Indicator Light
9. Fan
10. Edge Detection Sensors

Remote Control

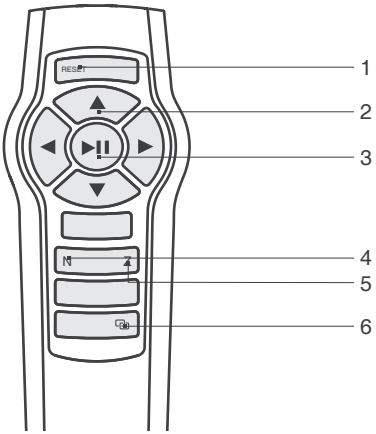

1. RESET Button
2. Direction Control Buttons
3. START/PAUSE Button
4. “N” Cleaning Mode Button
5. “Z” Cleaning Mode Button
6. Remote Control Pairing Button

3. Operating the Robot

3.1 Notes Before Cleaning

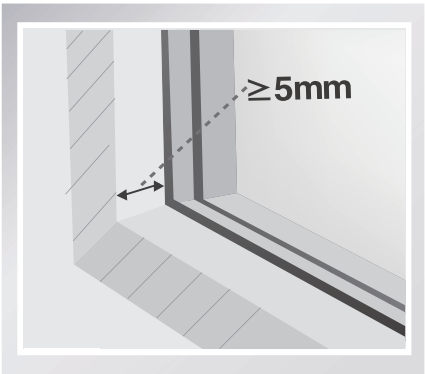

Do not use WINBOT 8 on a framed window with a frame smaller than 5mm (0.2”).

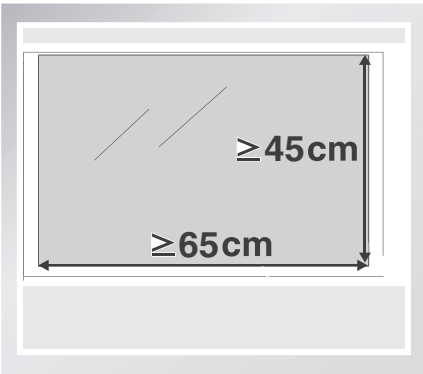

WINBOT 8 can clean framed or frameless glass, larger than 45cm x 65cm (17.7” x 25.6”).

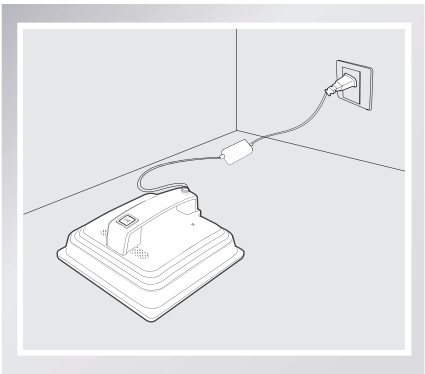

If WINBOT 8’s Status Indicator Light flashes GREEN after powering ON, the Back-Up Battery requires charging. Keep WINBOT 8 plugged in to charge the Back-Up Battery until the Status Indicator Light flashes BLUE. WINBOT 8 will not clean until the Back-Up Battery is charged.

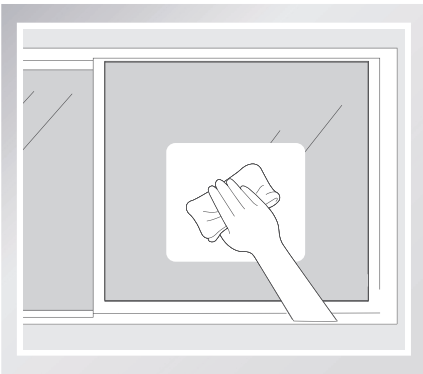

If the window is covered with dirt, clean a small area on the glass before use and place WINBOT 8 there.

- Please ensure there is a 15cm (5.9”) clearance between the glass and obstacles in the room like curtains or furniture.
- WINBOT 8 can clean horizontally mounted glass only using the Direction Control Buttons on the Remote Control.
- Do not use WINBOT 8 upside down.
- WINBOT 8 should only be used with WINBOT Cleaning Solution. Using other cleaners significantly reduces WINBOT’s performance and can damage the robot.
- Please refer to the manufacturer's care and cleaning instructions before using WINBOT 8 on glass with an uneven surface, such as frosted, textured, patterned, or coated glass. ECOVACS Robotics cannot be responsible for damage due to improper use on these surfaces.

3. Operating the Robot

3.2 Attach the Cleaning Pad

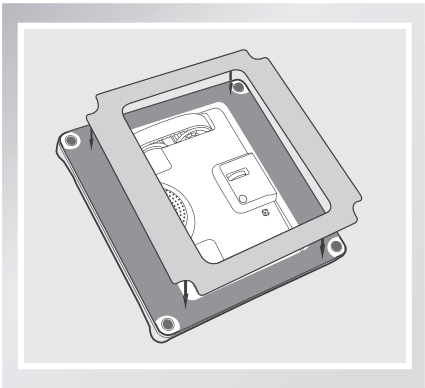

Turn WINBOT 8 over and attach the Cleaning Pad to the Velcro smoothly. Make sure the Cleaning Pad is placed exactly within its Velcro area and does not cover the Fan or Edge Detection Sensors.

3.3 Assemble the Power Adapter

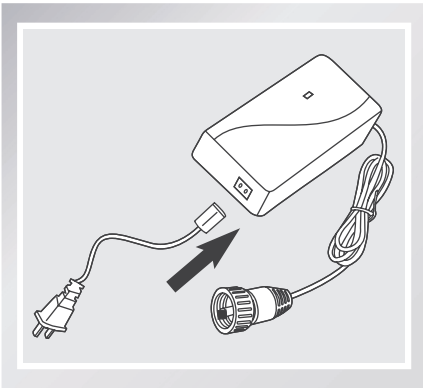

3.4 Install the Safety Tether

If WINBOT is used to clean an outside window, the Safety Pod and Tether MUST be used.

* If WINBOT 8 is being used to clean an inside window please skip to step 3.6.

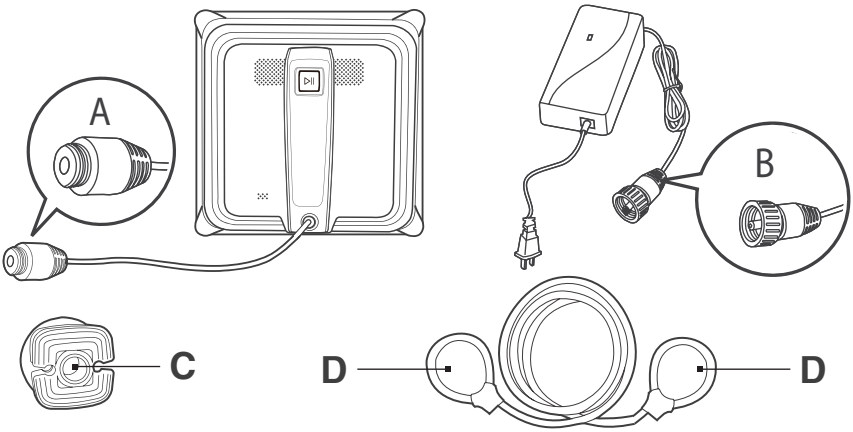

End A: Robot Power Cord
End B: Power Adapter Power Cord
End C: Safety Pod
End D: Safety Tether

3. Operating the Robot

1 **Loop one end of the Safety Tether to End A on the Robot Power Cord and tighten.**

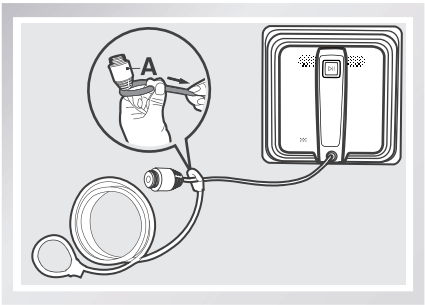

2 **Connect End A and End B and tighten.**

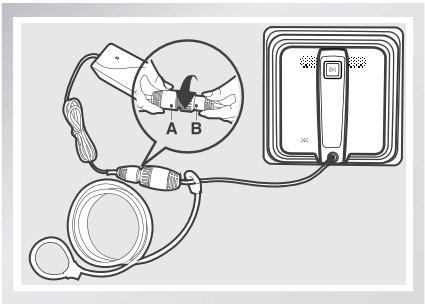

3 **Loop the other end of the Safety Tether around the Safety Pod's channel and pull it tight.**

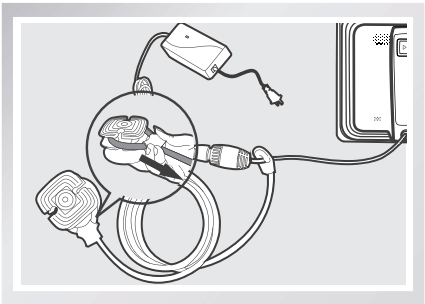

* If the length of the power cord restricts WINBOT 8's movement, a WINBOT Extension Cord can be used. Disconnect End A and End B, and connect them with both ends of the Extension Cord respectively and tighten.
* Only one Extension Cord can be used when WINBOT 8 is cleaning an outside window.

3.5 Place the Safety Pod

The Safety Pod MUST be placed on the *inside* of the window.

Press the Safety Pod FIRMLY on the *inside* of the window being cleaned. Make sure the Safety Pod is attached and securely in place.

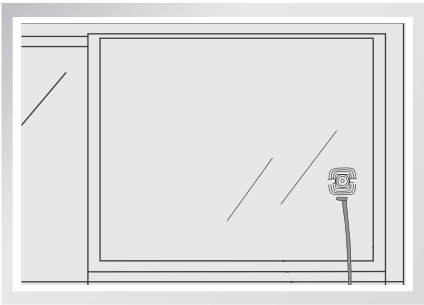

3.6 Spray Cleaning Solution

* WINBOT should only be used with WINBOT Cleaning Solution. Using other cleaners significantly reduces WINBOT's performance and can damage the robot.

Spray the upper and lower sides of the Cleaning Pad with the provided WINBOT Cleaning Solution 5 times each.

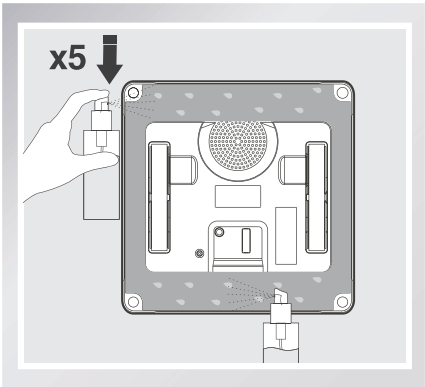

After spraying, wipe the bottom of WINBOT 8 with the provided Finishing Cloth.

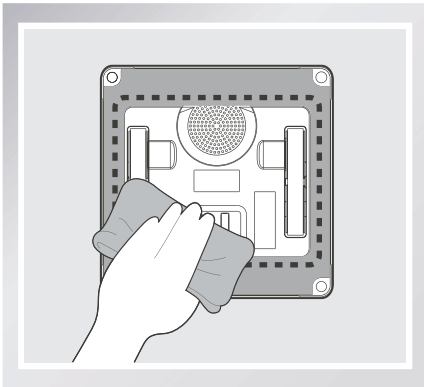

3. Operating the Robot

3.7 Start

1 Plug in WINBOT 8

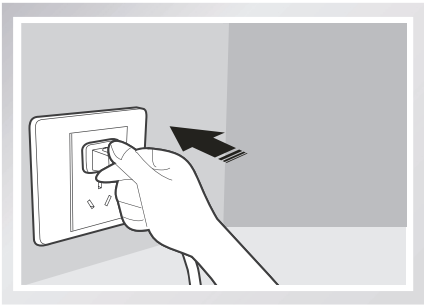

2 Power ON

- Move the Power Switch to the " ▬ " position. WINBOT 8 is powered ON when the Status Indicator Light flashes BLUE.

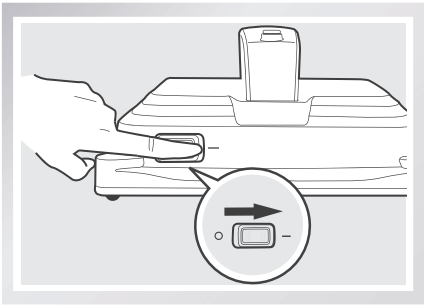

3 Place on the Glass

- Place WINBOT 8 on the window at least 10cm (4") from window corners or other obstacles. WINBOT 8 has successfully attached to the window when the Status Indicator Light glows a continuous BLUE.

* Please ensure there is a 15cm (5.9") clearance between the glass and obstacles in the room like curtains or furniture.

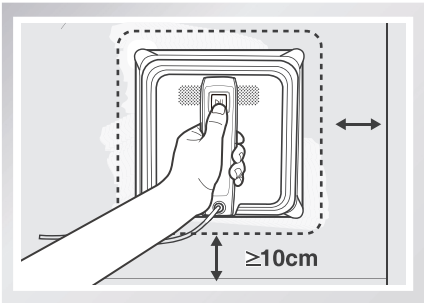

3. Operating the Robot

4 Start

- Press the START/PAUSE button on WINBOT 8 or on the Remote Control to begin cleaning.

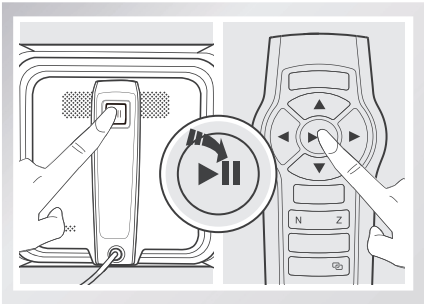

To change Cleaning Modes, Pause WINBOT by pressing the START/PAUSE button on WINBOT 8 or on the Remote Control, then press the “Z” or “N” Cleaning Mode Button on the Remote Control.
“N” Cleaning Mode is the default Cleaning Mode and is also ideal for tall windows.
“Z” Cleaning Mode is best for wide windows.

* Do not unplug WINBOT 8 while it is cleaning.

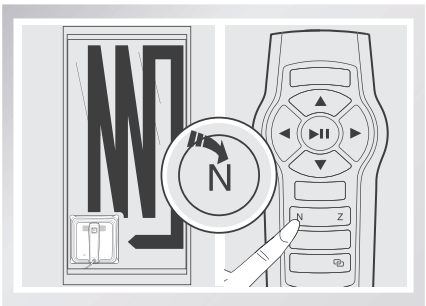

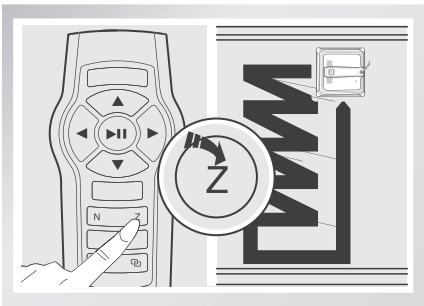

3.8 Pause

Pause WINBOT 8 during cleaning by pressing the START/PAUSE button on the robot or on the Remote control.

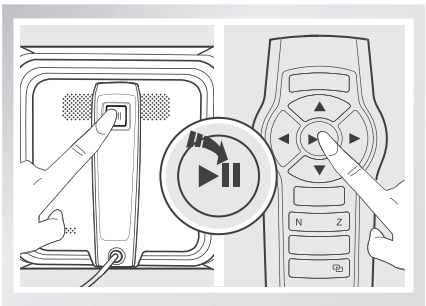

WINBOT 8 can be directed to move forward, backward, left and right using the Direction Control Buttons on the Remote Control when Paused. WINBOT 8 will clean when Direction Control Buttons are used.

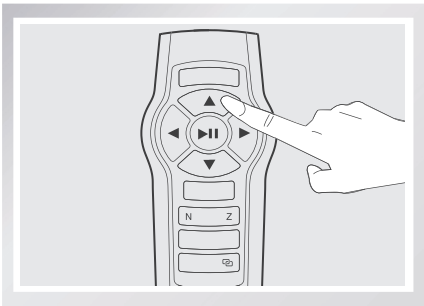

3. Operating the Robot

3.9 Stop

When WINBOT 8 completes its cleaning cycle, it returns to the place it started and beeps.

1 Remove WINBOT 8

- Grasp WINBOT 8's Handle. Press and hold ▶II for approximately 5 seconds and the fan will stop. Remove WINBOT 8 from the window. Polish away any marks left on the glass from WINBOT's removal with the provided Finishing Cloth.

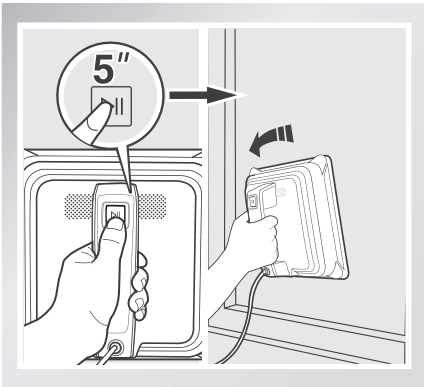

2 Power OFF

- Move the Power Switch to the "O" position.

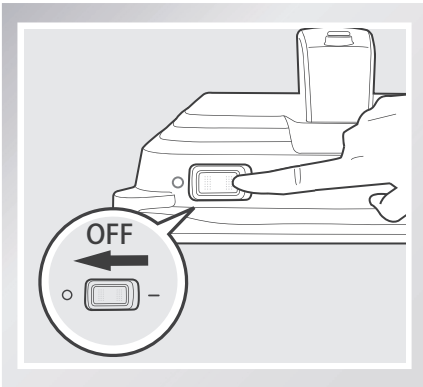

3 Remove the Safety Pod, if used.

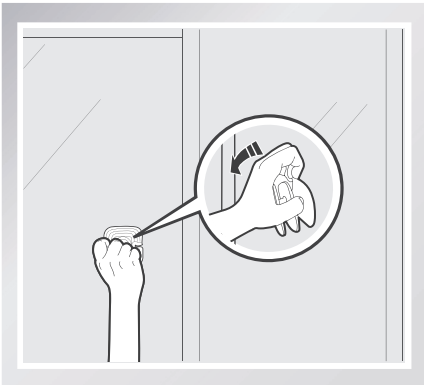

4 Unplug WINBOT 8

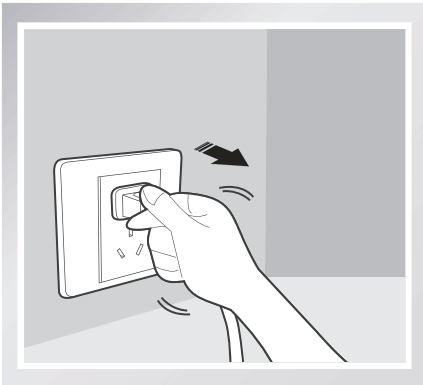

* If WINBOT 8 has a problem and the Indicator Light glows RED, it can be reset by pressing the Reset Button on the Remote Control.

4. Maintenance

Before performing cleaning and maintenance on WINBOT 8, move the Power Switch to the "O" position and unplug it from the receptacle.

4.1 Cleaning Pad

Turn the robot over and remove the Cleaning Pad. Rinse the Cleaning Pad and allow it to dry completely before re-attaching it to the robot.

* Do NOT use a wet Cleaning Pad on WINBOT 8 or it may slip on the window.

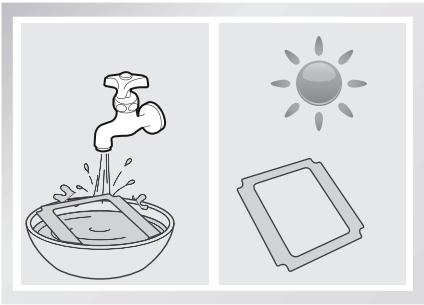

4.2 Fan and Sensors

Fan

Turn the robot over and wipe any debris from the Fan with the provided Finishing Cloth to maintain suction.

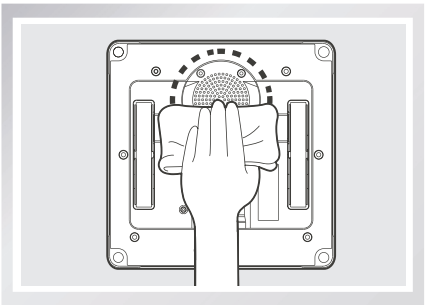

Wheel Sensor

Turn the robot over and wipe the Wheel Sensor with the provided Finishing Cloth to maintain its effectiveness.

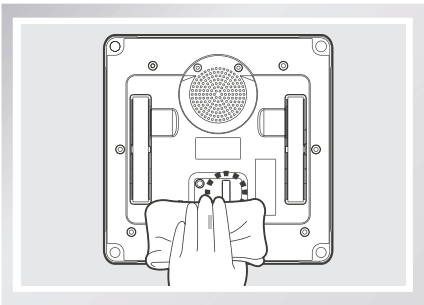

Edge Detection Sensors

Turn the robot over and wipe the four Edge Detection Sensors clean with the provided Finishing Cloth to maintain their effectiveness.

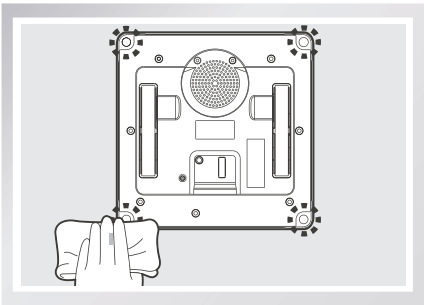

4. Maintenance

4.3 Driving Treads

Move the Power Switch to the “I” position. Press and hold the robot’s START/PAUSE Button for 5 seconds to stop the Fan.

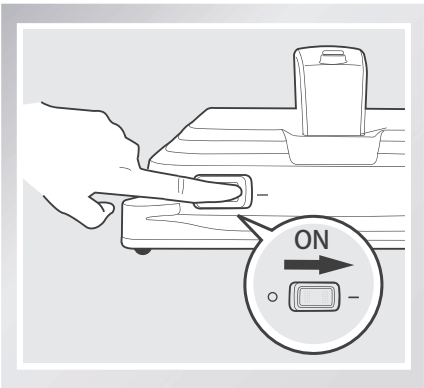

Turn WINBOT 8 over. Inspect the Driving Treads by using the ▲ and ▼ buttons on the Remote Control. Stop the Driving Treads if dirt is seen on the Treads.

Move the Power Switch to the “O” position.

Clean any dirt on the Driving Treads with the provided Finishing Cloth.

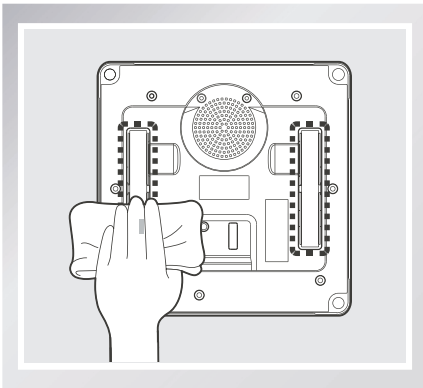

5. Status Indicator Light and Sound

Indicator	Description
Status Indicator Light flashes GREEN	Back Up Battery is low and is charging. WINBOT will not clean until the Back-Up Battery is properly charged.
Status Indicator Light flashes BLUE	WINBOT 8 is powered ON and is ready to be placed on the glass.
Status Indicator Light glows a continuous BLUE	WINBOT 8 has successfully adhered itself to the glass and is ready to clean.
Status Indicator Light glows RED	WINBOT 8 has a problem. Please refer to Section 6, Troubleshooting, for details.
WINBOT Emits beeps	WINBOT 8 beeps in following situations: WINBOT 8 is powered ON. WINBOT 8 finishes cleaning. WINBOT 8 has a problem.

6. Troubleshooting

NO.	Malfunction	Possible Causes	Solutions
1	Remote Control does not work	WINBOT 8 is cleaning. When WINBOT 8 is cleaning, only the START/PAUSE Button works on the Remote Control.	Pause WINBOT 8 by pressing the START/PAUSE button on the robot or Remote Control. Other buttons on the Remote Control will function when WINBOT 8 is paused.
		The Remote Control is not paired with WINBOT 8. WINBOT 8 arrives from the factory paired with its Remote Control. If the Remote Control becomes un-paired or is replaced, it can be re-paired.	Power ON WINBOT 8. At the same time, press and hold button on WINBOT 8 and button on the Remote Control. Paring is complete when START/PAUSE Button blinks RED, BLUE and GREEN.
		WINBOT 8's Status Indicator Light is glowing RED.	Reset WINBOT 8 by pressing the RESET Button on the Remote Control.
2	Status Indicator Light flashes BLUE after WINBOT 8 is placed on the glass	The Cleaning Pad is attached incorrectly and is covering the Fan or the Edge Detection Sensors.	Remove the Cleaning Pad and re-attach it making sure it is placed exactly within its Velcro area and does not cover the Fan or Edge Detection Sensors.
		Edge Detection Sensor malfunction.	A. Clean the Edge Detection Sensors as described in Section 4. B. If the problem persists, please contact Customer Service.
		Fan malfunction.	A. Clean the Fan as described in Section 4. B. If the problem persists, please contact Customer Service.
		Glass is too dirty for WINBOT 8 to adhere properly.	Clean a small area on the glass before use and place WINBOT 8 there.

6. Troubleshooting

NO.	Malfunction	Possible Causes	Solutions
3	Status Indicator Light glows RED	Interruption of electricity while WINBOT 8 was cleaning due to power failure, plug displacement, or loose connection to the Power Adapter.	A. Connect WINBOT 8 to the Power Adapter and plug into the wall receptacle. Press Start/Pause Button on the robot or on the Remote Control. WINBOT 8 will resume cleaning. B. In case of power failure, and the above solution does not work, please use the Direction Control Buttons on the Remote Control to direct the robot to a position on the window where you can safely reach it, turn off the fan and remove it from the window. If power has resumed, place the robot on the window again and restart.
		WINBOT has moved over a problem area and is losing suction.	A. Press the RESET Button on the Remote Control. Use the Direction Control buttons on the Remote Control to move WINBOT 8 away from the problem area and at least 10cm/4” from window corners and obstacles. Restart WINBOT 8. B. Press the RESET Button on the Remote Control, then use the Direction Control Buttons to direct WINBOT 8 to clean around the problem area.
		Edge Detection Sensor malfunction.	Clean the four Edge Detection Sensors clean as described in Section 4. If the problem persists, please contact our Customer Service.
4	WINBOT 8 is stuck and unable to move, or it moves in an irregular pattern during cleaning.	There is too much dirt and debris on the window.	A. Spray additional Cleaning Solution on the upper and lower sides of the Cleaning Pad. B. Clean the Driving Treads as described in Section 4. C. Replace the Cleaning Pad and restart the cleaning cycle. D. Clean the window by hand first and use WINBOT 8 for regular cleaning after that. *WINBOT 8 is intended to be used for maintenance cleaning on common windows. The product is NOT designed to replace heavy duty or first time cleaning.

Toutes nos félicitations pour l'achat de votre WINBOT d'ECOVACS Robotics! Nous espérons qu'il vous apportera de nombreuses années de satisfaction. Nous sommes persuadés que votre nouveau robot vous aidera à garder votre maison propre et vous permettra d'économiser du temps pour vivre intelligemment et apprécier la vie.
Live Smart. Enjoy Life.

Si vous deviez rencontrer des situations qui n'ont pas été correctement abordées dans ce manuel, veuillez contacter notre service clientèle, un technicien sera a votre service pour répondre à vos questions.

Pour plus d'informations, vous rendre sur le site officiel de ECOVACS :
www.ecovacs.com

Dans un souci d'amélioration constante de nos produits, nous nous réservons le droit de modifications techniques de l'appareil, que nous jugerons nécessaire à l'évolution constante de cette unité.

Nous vous remercions d'avoir choisi WINBOT !