

Continue

Baxi solo 2 40 pf user manual

Listed below are all the manuals for Baxi. Just click on the model or the Gas council number and the manual will download at the bottom of the page.

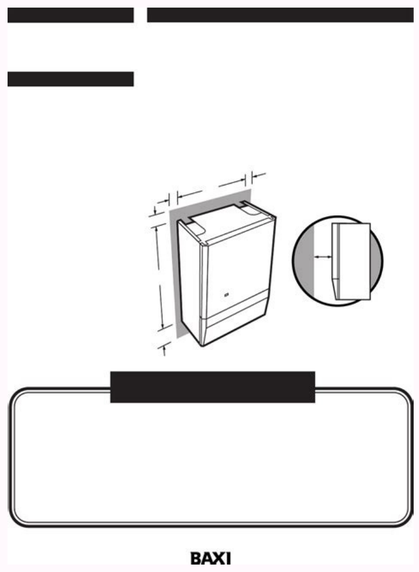

Any manual costs 29.90 EUR in addition to non-refundable 9.90 EUR flat rate (mandatory research fees to create an order) Home - Advanced search - How it works - All brands - All appliances - Special selection - Download (orders) Terms of service - Contact © 2004-2023 Assistance Network Inc. Recent search for BAXI SOLO 2 40 PF DE : BAXI SOLO 2 40 PF DE BAXI ROCA 150 SOLAR BAXI LUNA 240 FI KUR BAXI BRAZILIA BAXI LUNA HT 380 BAXI LUNA HT 380 BAXI 24 24F PLATINUM COMPACT BAXI 24 24F PLATINUM COMPACT BAXI 24 24F PLATINUM COMPACT BAXI 24 24F PLATINUM COMPACT BAXI 24 24F PLATINUM COMPACT BAXI 24 24F PLATINUM COMPACT BAXI 24 24F PLATINUM COMPACT BAXI 24 24F PLATINUM COMPACT BAXI 24 24F PLATINUM COMPACT BAYLOCK (1) BAYARD (2) BAY NETWORKS (1) BAXTRAN (3) BAXIROCA (6) BAXI ROCA (12) BAXI (119) BAXALL (1) BAVARIA (3) BAUTZ (4) BAUSH + LOMB (3) BAUMATIC (4) BAUKNECHT (64) BAUHN (3) BAUER (40) BAUDOUIN (1) BASETECH (3) BARLOW WADLEY (1) BARCO (21) BANG & OLUFSEN (48) BANDT (1) BAND IN BOX (1) BANAX (1) BAMFORDS (1) BAMFORD (2) BALTUR (15) BALMET (1) BALCO (6) BALBOA (4) BALAY (15) BALANCE (2) BAJA (1) BABYLOCK (10) BABYLISS (7) BABY LOCK (16) BaxiSolo 2 PFWall Mounted Powered FlueGas Fired Central Heating UnitInstallation and Servicing InstructionsPlease leave these instructions with the user