Instruction Manual

Gunclean Toftejorg™ i40 D

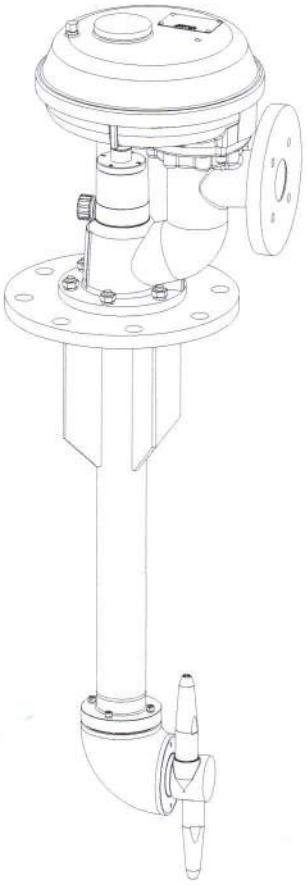

IM-TE 91A865-EN2
Date of issue: October 12, 2010

Handling of loads

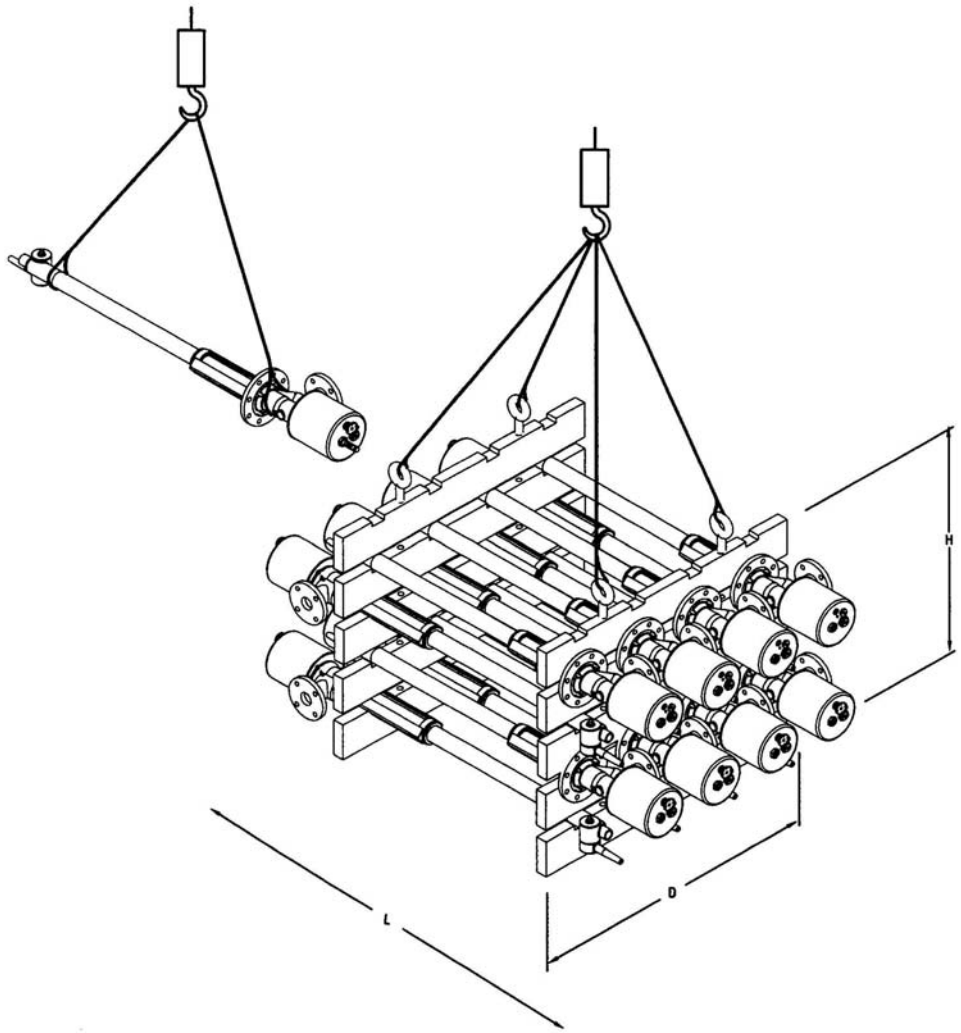

Back position of the centre of gravity: L/2 H/2 D/2

Warning: Do not walk under hanging loads!



Contents

Handling of loads 1
Contents 1
Introduction 3
Rating plate 4
Patents and trademarks 4
General description 5
- Four main parts 5
- Flow of the cleaning fluid 5
- Gear Unit 6
- Inlet Housing 6

Technical Description 8
- Performance Data, without nozzle extension 8
- Performance Data, with nozzle extension 9
- General Data 10
- Leakage 14

Installation and Normal Operation 15
- Before Installation 15
- Operation 15
- Cleaning time 16
- Speed Adjustment 17

Maintenance and Repair 18
- Preventive Maintenance Guidelines and Service Kits 18
- Maintenance intervals and Service Kits selection 18
- General recommendations 19
- Additional maintenance recommendations 19
- To Remove Cover 21

Gunclean Toftejorg i40 D, Gear unit 22
- Spare part list 22
- Assembly drawing 23
- Stand for magnet holder 24
- Complete gear stand for rotation 26

Gunclean Toftejorg i40 D, Inlet Housing Assembly 28
- Spare part list 28
- Assembly drawing 29
- Valve Unit Assy P, spare part list 30
- Valve Unit, assembly drawing 31

Gunclean Toftejorg i40 D, Down Pipe and Drive shaft 32
- Reference list of parts 32
- Assembly drawing 33

Gunclean Toftejorg i40 D, Cleaner Head 34
- Reference list of parts 34
- Assembly drawing 35

Service Kits 36
Tool Kit 37

How to order Spare Parts and Claim Procedure 38
How to contact Alfa Laval Tank Equipment A/S 38
Service Card 39
Claim Report - Working Conditions 40

Introduction

This manual is intended to assist in the handling and operation of the Gunclean Toftejorg i40 D tank cleaning system and has been prepared as a guide for the persons who will be operating and maintaining your tank cleaning machine. The key to long life for your tank cleaning machine will always be a system of carefully planned maintenance; you will appreciate that a tank cleaning machine which has a rough and dirty job to do will need more frequent attention than one working in ideal conditions.

Note: Get the best and most economical performance from your tank cleaning machine. Insufficient preventive maintenance means poor performance, unscheduled stops, shorter lifetime and extra costs. Good preventive maintenance on the contrary means good performance, no unscheduled stops and superior total economy.

You will find the information contained in this manual simple to follow, but should you require further assistance, our Customer Service Department and world-wide net of Distributors will be pleased to help you. Please quote the type and serial number with all your enquiries; this will help us to help you. The type and serial number are placed on the gear house of the tank cleaning machine.

Note: The illustrations and specifications contained in this manual were effective at the date of printing. However, as continuous improvements are our policy, we reserve the right to alter or modify any unit specification on any product without prior notice or any obligation.

Warning: Service must be made by trained or authorised staff.



Caution: Before operation the cover must be put back.



Danger: Tank cleaning must be made according to IMO and/or owners instructions.



Rating plate

The Rating plate contains all identifications for the machine. The information is very useful, e.g. when ordering service or spare parts.

Gunclean Toftejorg i40 D - Rating plate



Patents and trademarks

This Instruction Manual is published by Alfa Laval Tank Equipment A/S without any warranty. Improvements and changes to this Instruction Manual may at any time be made by Alfa Laval Tank Equipment A/S without prior notice. Such changes will, however, be incorporated in new editions of this Instruction Manual.

© Alfa Laval Tank Equipment A/S, 2010. All rights reserved.

The Alfa Laval logotype is a trademark or a registered trademark of Alfa Laval Corporate AB. "Gunclean Toftejorg" is a trademark or registered trademark of Alfa Laval Tank Equipment A/S. The Gunclean Toftejorg™ i40 D product has new patent pending. Other products or company names mentioned herein may be the trademarks of their respective owners. Any rights not expressly granted herein are reserved.

General description

Four main parts

1. Gear unit
2. Inlet housing
3. Down pipe
4. Cleaner head

Gunclean Toftejorg i40 D - Main parts

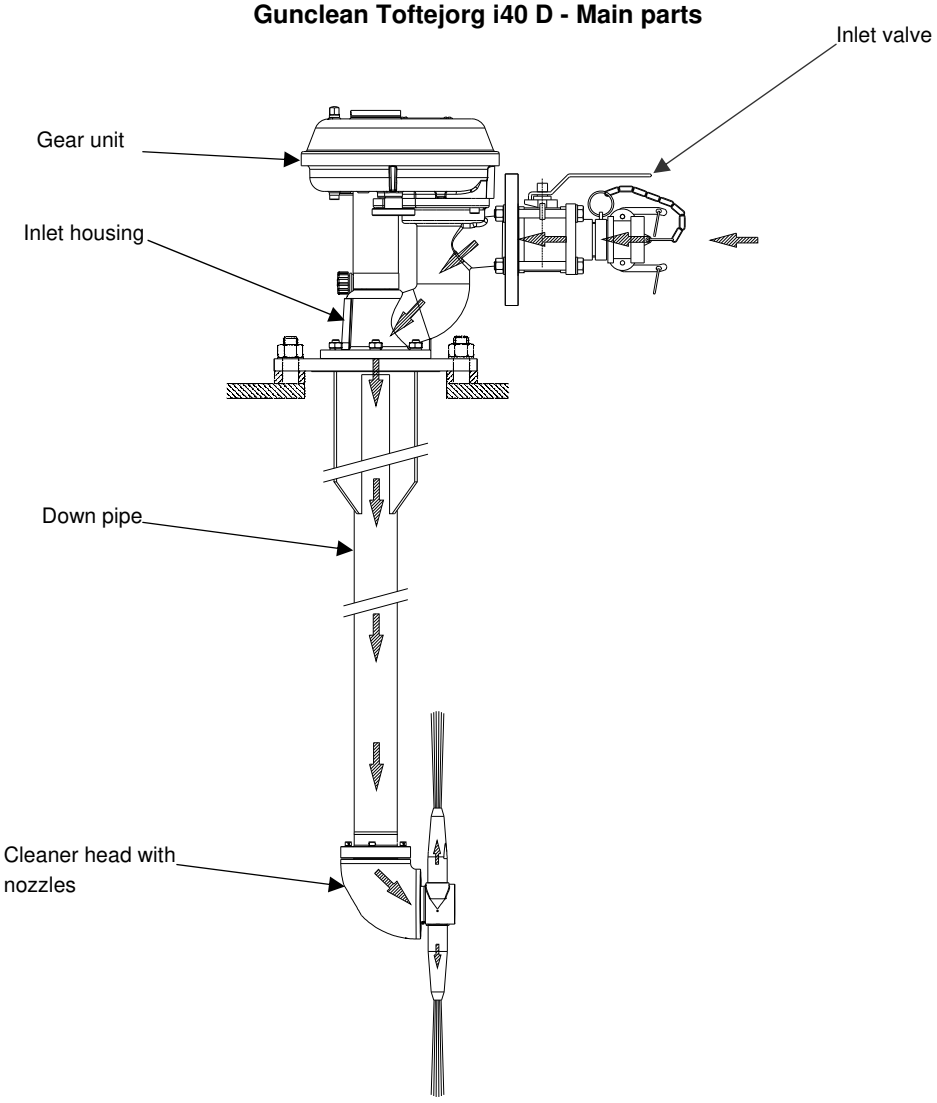

Flow of the cleaning fluid

The fluid comes from the tank cleaning supply line, passes through the inlet shut-off valve, proceeds into the inlet housing, passes through the turbine, turns downwards through the deck into the main pipe and finally exits through the nozzle.

General description

The Gunclean Toftejorg i40 D tank cleaning machine consists of two main parts, a Cleaner Unit and a Gear Unit.

Gear Unit

The Gear Unit is the drive and operation unit and is mounted on the inlet housing.

Inlet Housing

Above deck the inlet housing with the turbine is fitted to the deck flange. The down pipe is fitted to the deck flange. The down pipe protrudes into the tank and thereby it allows the cleaner head with the nozzle to spray cleaning fluid on all the inner surfaces of the tank. The rotation speed normally varies between 1-2 rpm, depending on the nozzle diameter and the line pressure at the inlet. The nozzle unit consists of a housing and two nozzles with flow guides.

The rotation of the house and nozzles is transferred by a drive shaft.

Gunclean Toftejorg i40 D – Gear unit

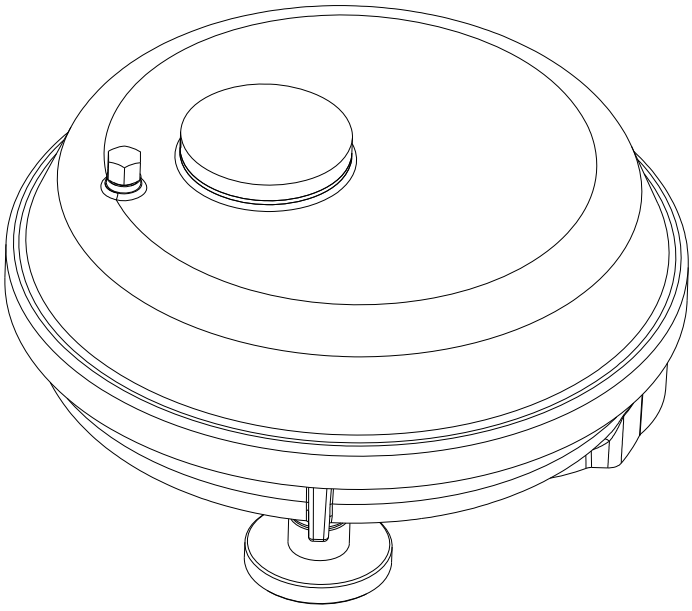

General Description

Gunclean Toftejorg i40 D – Cleaner head and nozzle drive mechanism

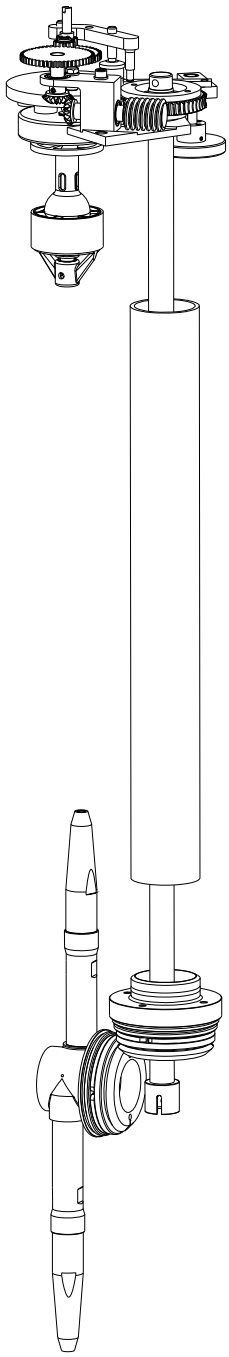

Technical Description

Performance Data, without nozzle extension

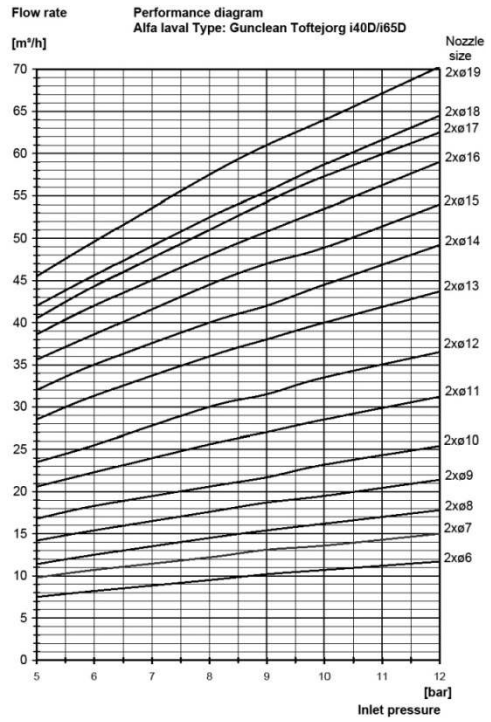

Flow rate

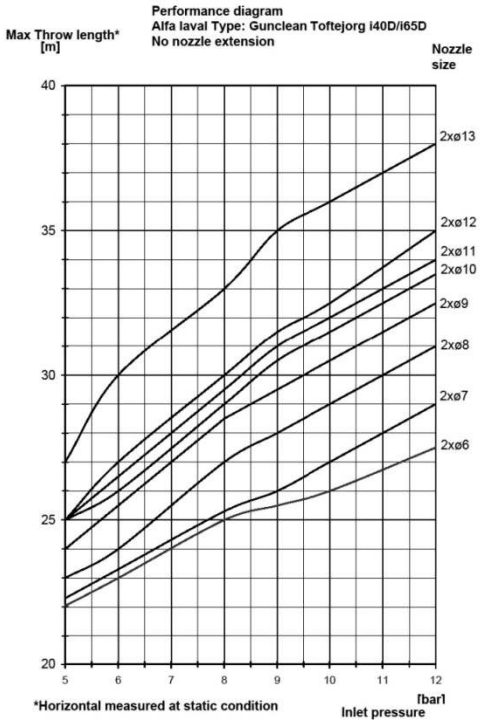

Throw length, nozzle size ø6 - ø13

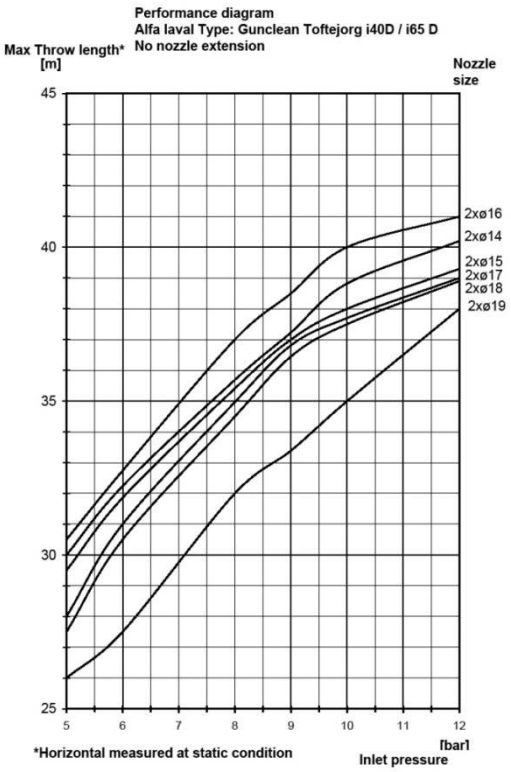

Throw length, nozzle size ø14 - ø19

Note: Throw lengths are measured as max. horizontal throw length at static condition. Vertical throw length upwards is approx. 1/3 less.

Effective throw length varies depending on jet transverse speed over surface, substance to be removed, cleaning procedure and agent.

The inlet pressure has been taken immediately before the machine inlet. In order to achieve the performance indicated in the curves, the pressure drop in the supply lines between pump and machine must be taken into consideration.

Technical Description

Performance Data, with nozzle extension

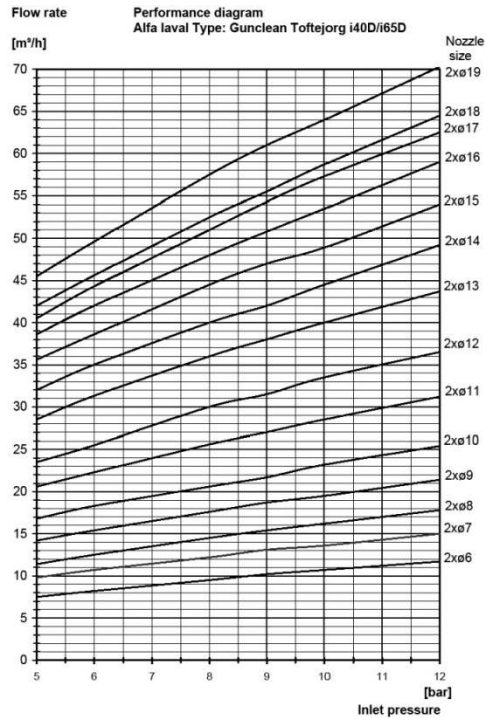

Flow rate

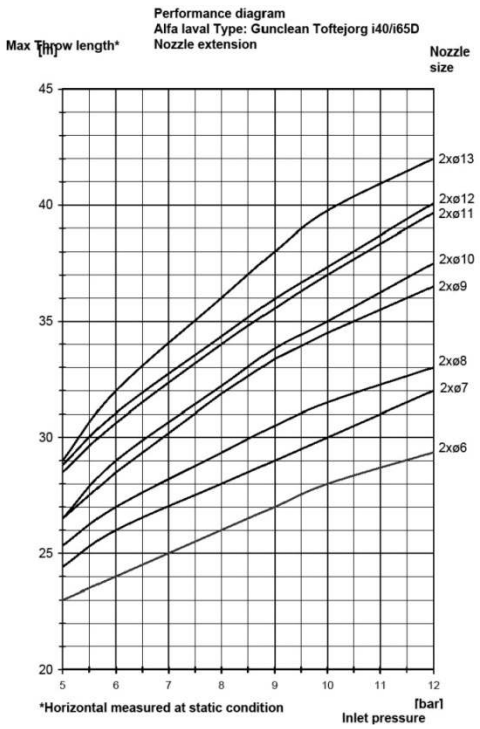

Throw length, nozzle size ø6 - ø13

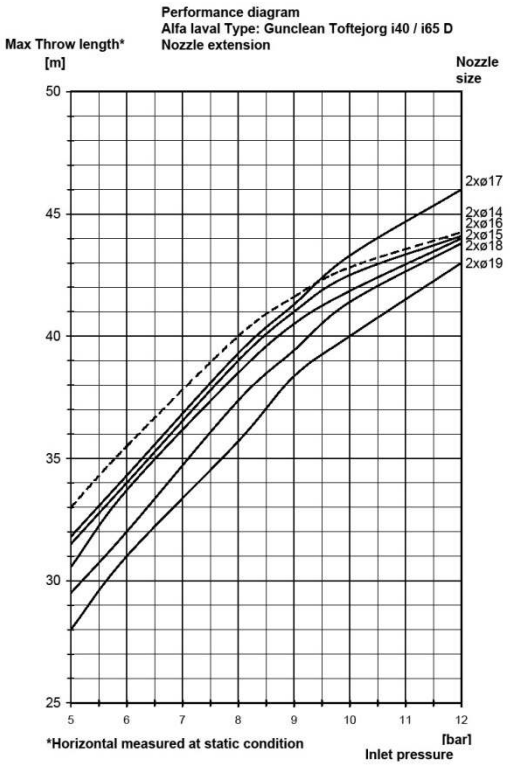

Throw length, nozzle size ø14 - ø19

Note: Throw lengths are measured as max. horizontal throw length at static condition. Vertical throw length upwards is approx. 1/3 less.

Effective throw length varies depending on jet transverse speed over surface, substance to be removed, cleaning procedure and agent.

The inlet pressure has been taken immediately before the machine inlet. In order to achieve the performance indicated in the curves, the pressure drop in the supply lines between pump and machine must be taken into consideration.

Technical Description

General Data

Weight	:	Machine with 1 m length of main pipe	:	66 kg
		Per additional meter of Main pipe	:	8.2 kg
Servicing space	:	Minimum radius from centre of deck flange	:	R = 250 mm valve not incl.
		Height above dock min	:	900 mm

Material (std. version) :	Spare part	Material
	Inlet housing	AISI 316L
	Main pipe	AISI 316L
	Lower assembly	AISI 316L
	Cover	Stainless steel
	Sealings	

Supply Data

Gunclean Toftejorg i40 D is operated with a supply of cleaning fluid at a flow of approximately 8-45 m^3/hour and at an inlet pressure of 0.6-1.2 Mpa.

Rotating Speed

The rotating speed can vary between approx. 0.5 - 2 rpm depending on flow and TCM configuration.

- Blank page -

Technical Description

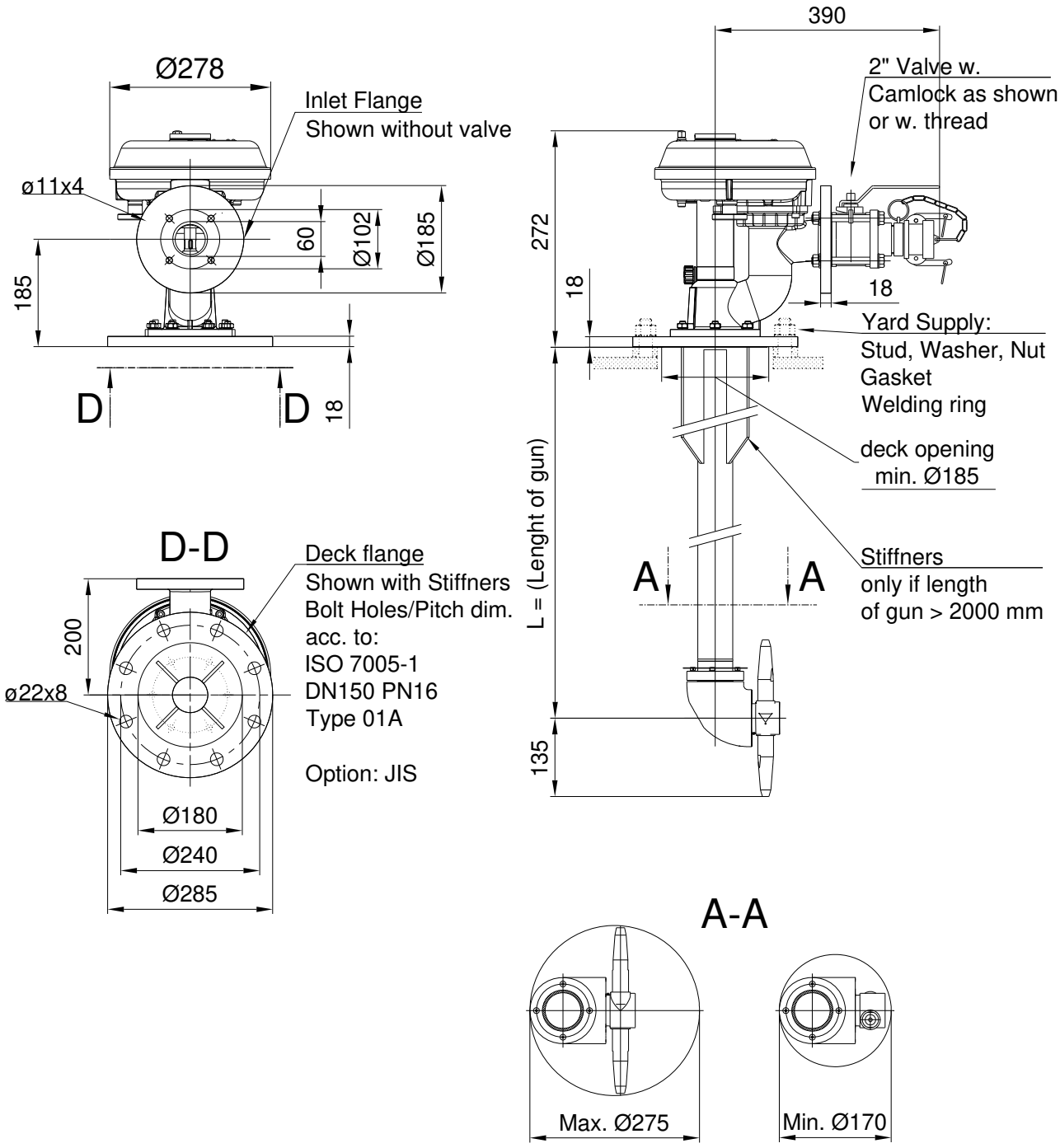

Technical Description

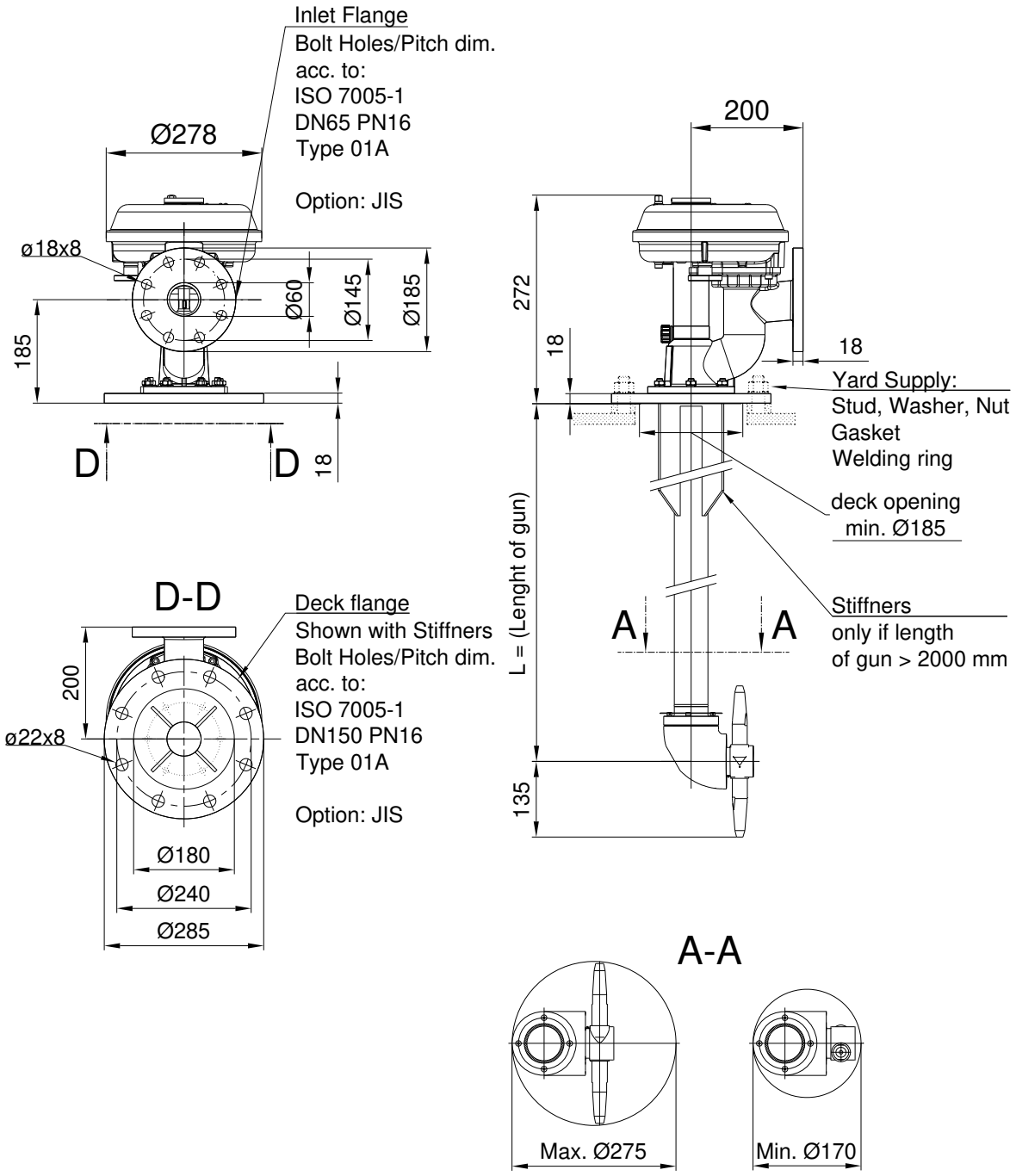

Technical Description

Leakage

A small leakage will appear at the places shown below in order to provide the bearing with water for lubrication and cleaning.

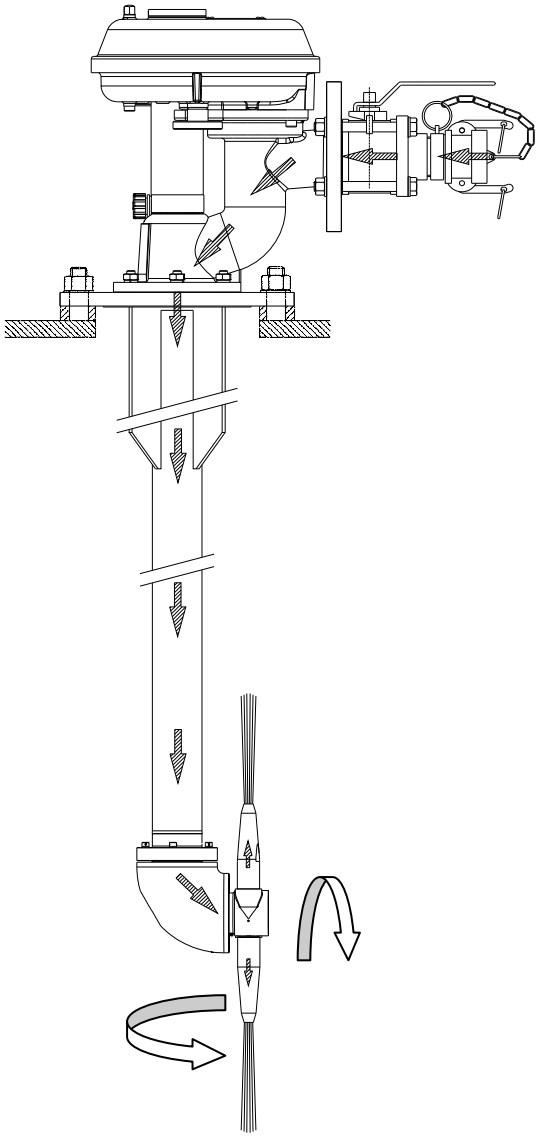

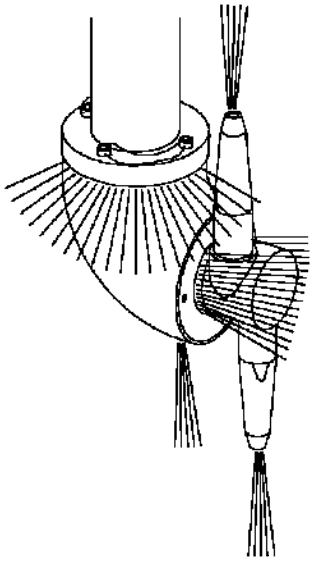

Defined leakage in cleaner head for self-cleaning.

Installation and Normal Operation

Before Installation

Make sure that the pipes have been properly flushed before installation. We know from experience that welding rods, plastic bags, rags and other debris will block the turbine. This may result in damage and poor performance.

Operation

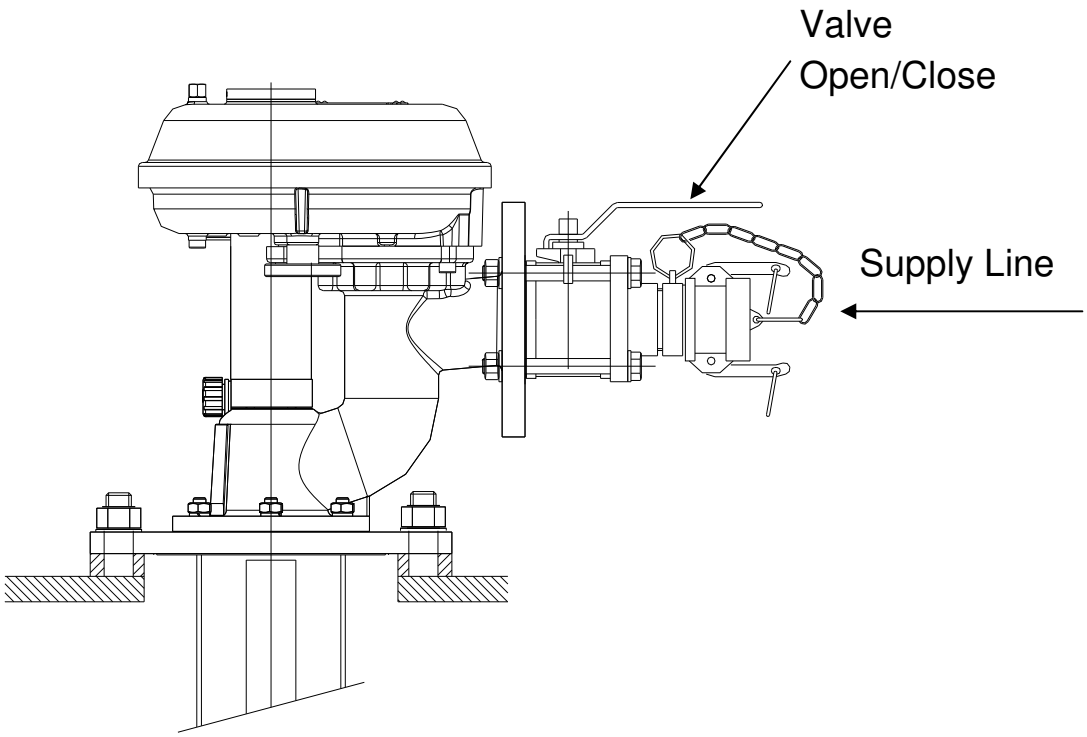

How to start operation

1. Pressurize the supply line up to the inlet valve closest to the machine.
2. Open the valve slowly to start the machine.

How to stop the machine after cleaning

1. Close valve.

Installation and Normal Operation

Cleaning time

The rotating Turbine shaft is via the gear connected to the Drive shaft which rotates the Cleaner head. The horizontal rotation of the Cleaner head is through a Bevel gear coupled to a simultaneously vertical rotation of the Nozzle head.

The combined motion of the cleaner unit body and the Nozzles ensures a fully indexed tank cleaning coverage. After 11 1/4 revolutions of the Hub with Nozzles (10 $^{3}/_{4}$ revolutions of the machine body), one coarse cleaning pattern is laid out on the tank surface and the first cycle has been made. During the following rotations, this pattern is repeated 3 times, each of which is displaced and the pattern gradually becomes more dense. Finally, after 4 cycles - a total of 45 revolutions of the Hub with Nozzles (43 revolutions of the machine body), a complete cleaning pattern has been laid out, and the first pattern is then repeated.

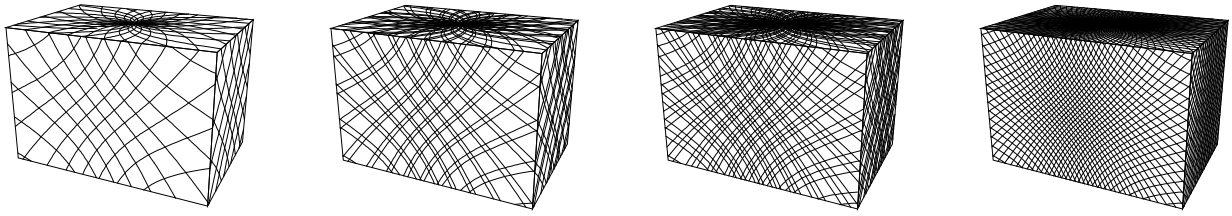

1st cycle 2nd cycle 3rd cycle 4th cycle

The number of cycles needed to perform an effective cleaning depends on type of soilage, distance, cleaning procedure, cleaning agent and the peripheral speed of the jet over the surface. For substances that are easily mobilised, i.e. are easy to remove, one cycle with relatively high rotation speed could be sufficient while in cases of more heavy soilage (high viscous, sticky substances, etc.) a more dense pattern/more cycles and slower rotation speed will be needed.

Apart from the jet flow through the nozzles, fluid is leaking between the Down pipe and Cleaner head, at the hub and through the bottom.

Installation and Normal Operation

Speed Adjustment

The rotation speed of the cleaner can be regulated by turning the Speed adjustment knob.
Speed is adjusted from factory to 1 rpm.

Recommended speed:
1 – 2 rpm

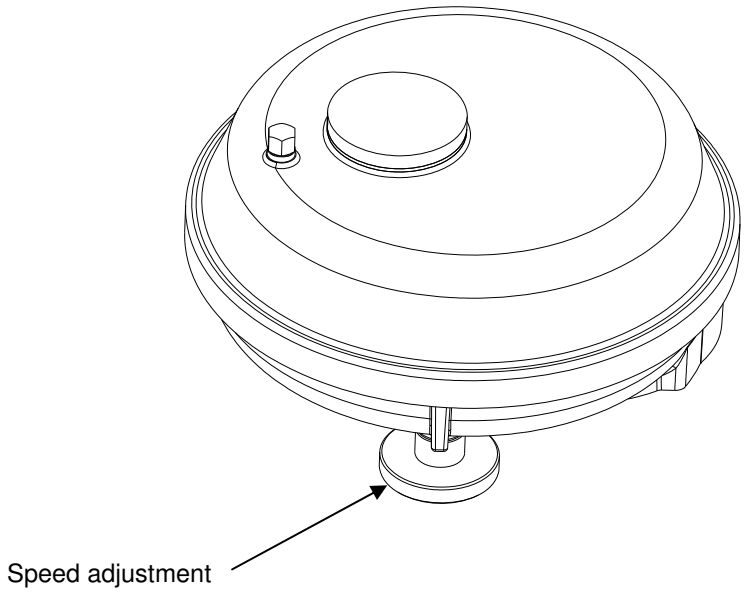

Maintenance and Repair

Preventive Maintenance Guidelines and Service Kits

By using Alfa Laval Tank Equipment Preventive Maintenance Guidelines and Service Kits you are enabled to ensure the availability of your equipment at all times. You are able to plan your operating budget and your downtime. The risk of breakdowns due to component failure is virtually eliminated and in the long term your operating costs are reduced.

Alfa Laval Tank Cleaning Equipment Service Kits contain All you need. They comprise genuine Alfa Laval spare parts, manufactured to the original specifications.

Maintenance intervals and Service Kits selection

Alfa Laval Service Kits for Tank Cleaning Machine type, Gunclean Toftejorg i40S are available in two levels for the Drive- and Turbine Unit: Minor Service and Major Service. And in one level for the Cleaner Unit.

Minor Service kit for Drive unit (above deck) is recommended to be replaced every 300 working hours or 3 years, whichever comes first.

Major Service kit for Drive unit (above deck) is recommended to be replaced every 600 working hours or 6 years, whichever comes first.

All Major Service kits includes the corresponding Minor Service Kits parts. Each kit contains a maintenance guide.

Minor Service Kit for Drive Unit, ref. TE55T400 includes

Part no.	Qty	Description	Included in	Pos.
TE900542M8	1	Washer	TE40D311	3
TE916302	1	O-ring	TE40D311	13
TE916430	1	O-ring	TE40D311	14
TE65S560	1	Gasket for packing box	TE40S310	2
TE918221	1	Lip seal	TE40S310	3
TE65S581	3	Bushing	TE40S310	11
TE918227	1	O-ring	TE40S310	13
TE51T027	1	O-ring	TE40S310	16
TE51T223	1	Lip seal	TE40S310	21
TE40S555	2	Bushing	TE40D330	8
TE51C239	1	Retaining ring	TE40D330	11
TE916307	3	O-ring	TE40S332	5

Maintenance and Repair

Major Service Kit for Drive Unit, ref. TE55T410 includes

Part no.	Qty	Description	Included in	Pos.
TE916321	1	O-ring	TE40D311	26
TE51L108	2	Ball bearing	TE40D330	3
TE65S520	1	Gasket for turbine cover	TE40S310	4
TE51L114	3	Ball bearing	TE40S333	4
TE55T400	1	Minor service kit DU		-

Service kit for Gunclean Toftejorg i40 D Cleaner Unit (below deck) is recommended to be replaced every 1200 working hours or 12 years, whichever comes first.

Service Kit for Cleaner Unit, ref. TE55T730 contains

Part no.	Qty	Description	Included in	Pos.
TE20G318	2	Ball retainer with balls	TE73A310	4
TE20G574	2	Ball race	TE73A310	5
TE51C105	1	Split pin	TE73A310	10
TE73B509	1	Lip seal	TE73A310	13
TE651	1	Locking wire 0.14m	TE73A310	-

General recommendations

- Always read the instruction and maintenance manuals before undertaking the service.
- Some kit contains a small quantity of parts not need for each tank cleaning machine model. These are not included in the price and may be disregarded.
- Always replace all parts included in the Service Kit.

Additional maintenance recommendations

Cleaner Unit

Bearings and bushings to be cleaned or replaced if necessary, see reference list for Cleaner Unit.

Gear Unit

Rust protected and greased for six months after delivery from our factory (see next page).

Maintenance and Repair

Every month

- Check that all the moving parts are well-greased. If not, all parts must be greased (see recommended grease below).
- Check rust protection. All parts inside the Gear Unit must be greased.
- Check for leakage during operation.

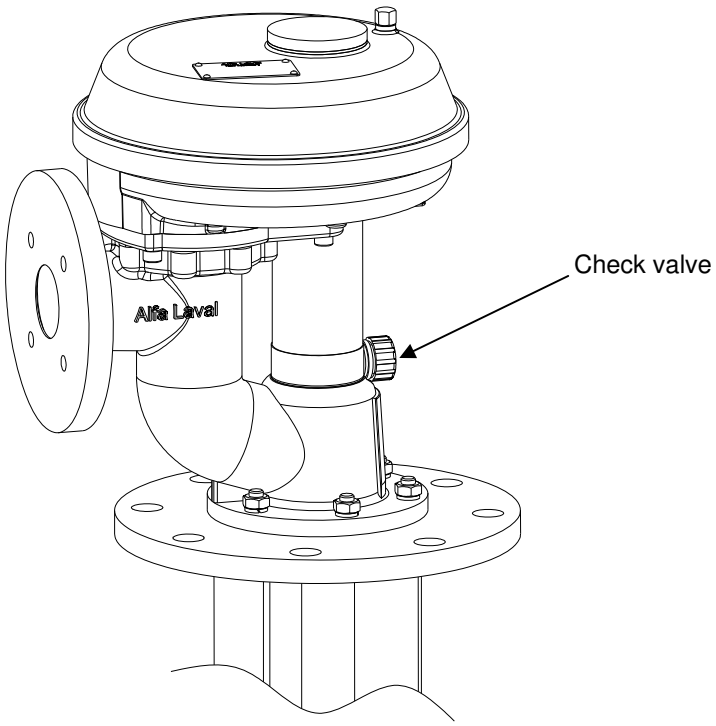

Recommended grease

Make	Grease
Mobil	Mobilith SHC 460
Texaco	Hitex 1P2
Shell	SRS 4000
BP	Super Grease
Statoil	Grease way CaH92

Maintenance and Repair

To Remove Cover

For service and maintenance the cover has to be removed.

1. Unscrew the screw for cover and remove the upper cover.

Warning: Service must be made by trained or authorised staff.

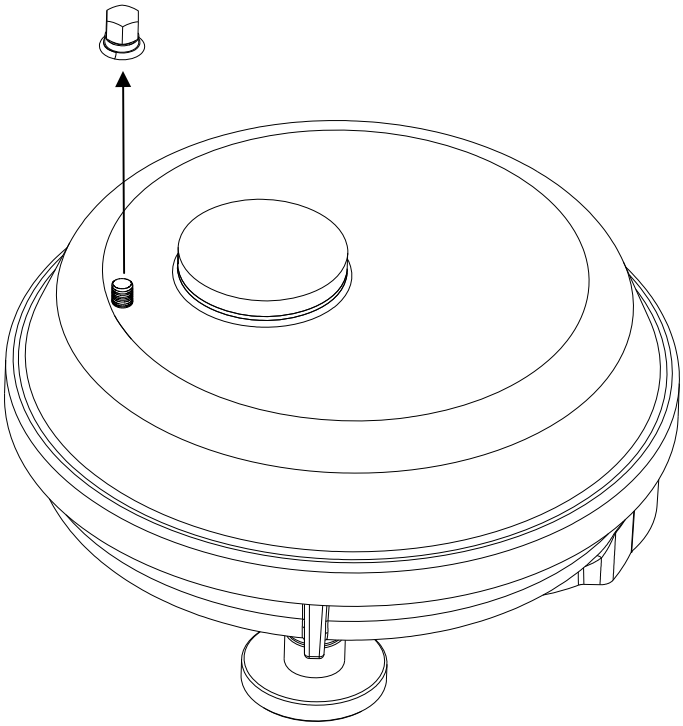

Caution: Before operation the cover must be put back.

Gunclean Toftejorg i40 D, Gear unit

Spare part list

Article no. TE40D311

Pos	Drwg.No	Description	Pcs.	Material
1	TE40S542	Lower gear platform machined	1	Cast steel galv.
2	TE40S333	Complete gear stand for rotation	1	Assy
3	TE900542-m8	Washer	4	Stainless steel
4	TE40D517	Lifting rod upper part	1	Stainless steel
5	TE40S524	Stand for worm wheel machined	1	Cast steel
6	TE51C240	Retaining ring	1	Spring steel
7	TE40S559	Worm gear rotation	1	Cast iron
8	TE40S516	Gasket stand for worm wheel	1	Gasket
9	TE914128	Washer	2	Stainless steel
10	TE910568	Screw	4	Stainless steel
11	TE51A298	Screw	3	Stainless steel
12	TE51A521	Cap nut	1	Stainless steel
13	TE916302	O-ring	1	Elastomer
14	TE916430	O-ring	1	Elastomer
15	TE40S519	Sight glass	1	Polymer
16	TE104209	Gasket f. sight glass	1	Elastomer
17	TE910571	Screw	3	Stainless steel
18	TE40D521	Mounting shaft for top cover	1	Steel
19	TE40S568	Program shaft	1	Stainless steel
20	TE40D607	Flat bar for speed control	1	Steel
21	TE40D330-L	Stand for magnet holder assy	1	Assy
22	TE40D612	Pre-wash arm	1	Stainless steel
23	TE910394	Screw	2	Stainless steel
24	TE910573	Screw	1	Stainless steel
25	TE51A956	Set screw	2	Stainless steel
26	TE916321	O-ring	1	Elastomer
27	TE40D569	Cover machined	1	Cast steel galv.
28	TE914033	Locking nut	2	Stainless steel
29	TE51A518	Lock nut	5	Stainless steel
30	TE40D559	Holder for drive shaft	1	Steel
31	TE40S556	Speed control arm	1	Steel
32	TE51B010	Spring washer	2	Stainless steel

Gunclean Toftejorg i40 D, Gear unit

Assembly drawing

Article no. TE40D311

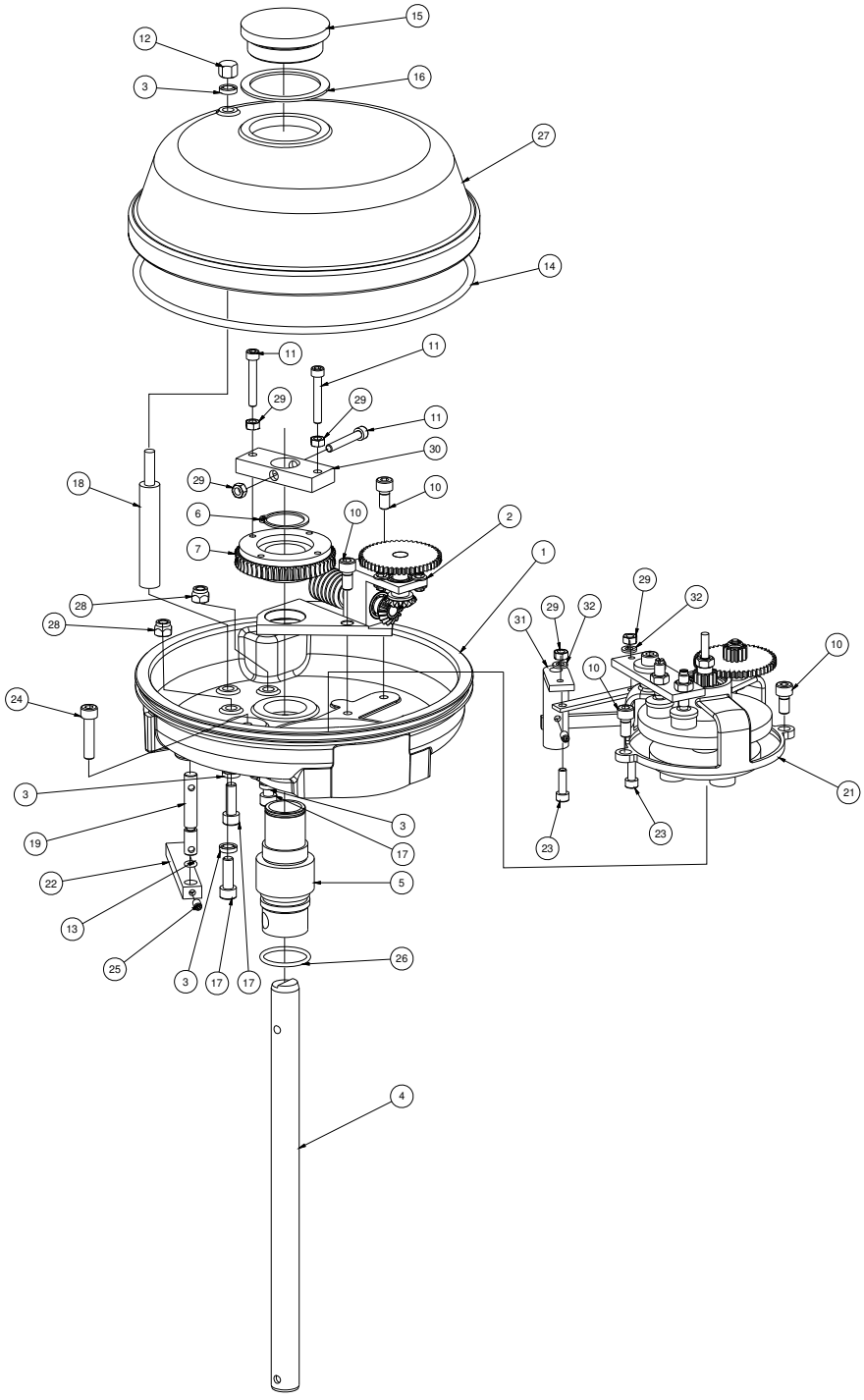

Gunclean Toftejorg i40 D, Gear unit (continued)

Stand for magnet holder

Reference list of parts, article no. TE40D330-L

Pos	Drwg.No	Description	Pcs.	Material
1	TE40S547	Stand for magnet holder machined	1	Cast steel
2	TE40S325-L	Magnet dish assy – long shaft	1	
3	TE51L108	Single row ball bearings	2	Steel
4	TE51C237	Retaining ring	1	Spring steel
5	TE40S319	Brake magnet holder assy	2	
6	TE40S326	Second gear assy	1	
7	TE40S555	Bushing	2	Polymer with 25% carbon
8	TE51B065	Washer ø6	1	Stainless steel
9	TE40S523	Shaft second gear	1	Steel
10	TE51C239	Retaining washer	2	Spring steel
11	TE40S504	Spur gear magnet holder	1	Steel
12	TE40D628	Magnet holder break	1	Steel
13	TE40D602	Distance for magnet break holder	1	Steel
14	TE40D601	Washer for magnet break holder	1	Steel
15	TE910571	Screw	1	Stainless steel
16	TE51A551	Lock nut	3	Stainless steel

Gunclean Toftejorg i40 D, Gear unit (continued)

Stand for magnet holder

Assembly drawing, article noTE40D330-L

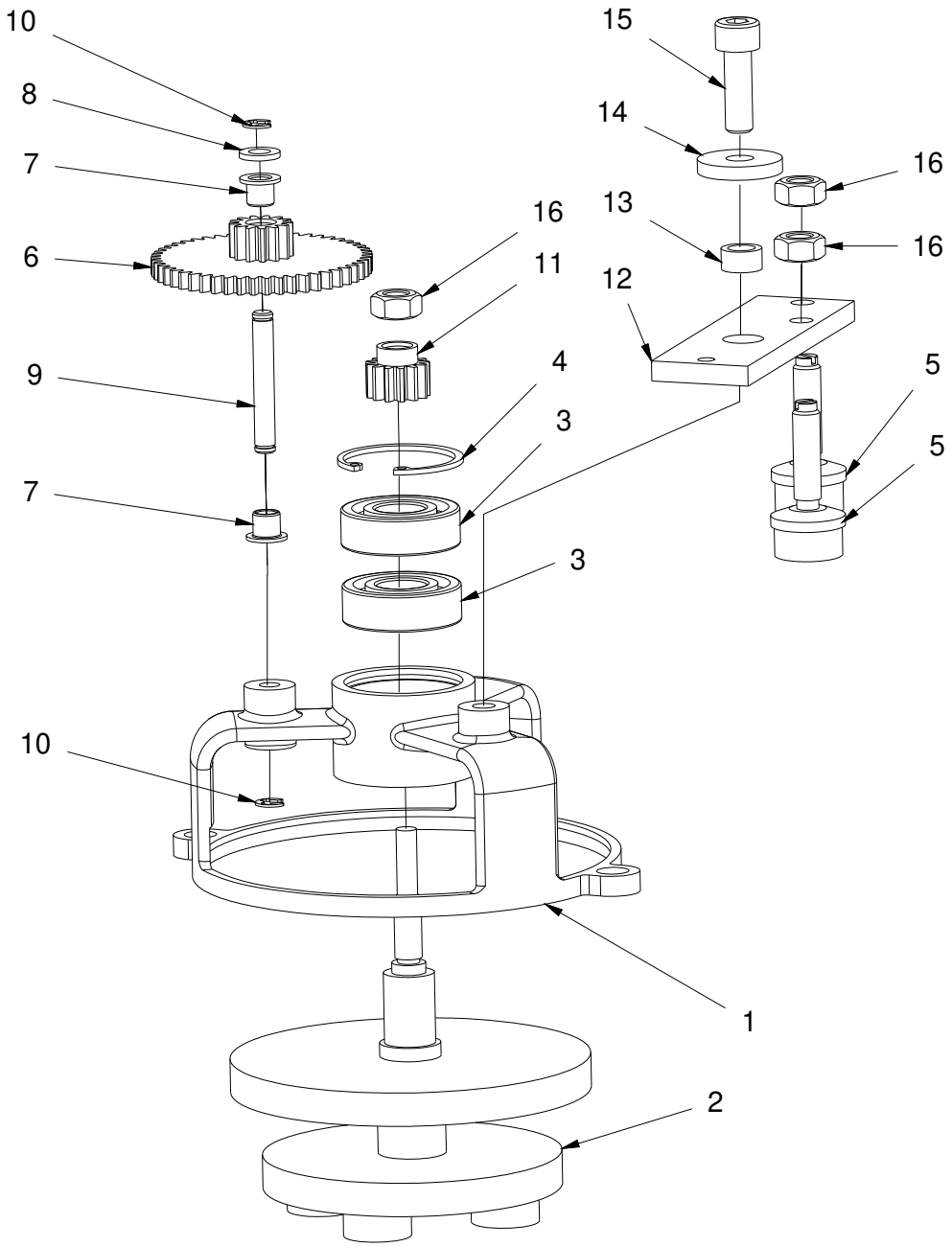

Gunclean Toftejorg i40 D, Gear unit (continued)

Complete gear stand for rotation

Article no. TE40S333

Pos	Drwg.No	Description	Pcs.	Material
3	TE40S593	Distance worm screw stand	1	Steel
4	TE51L114	Ball bearing	3	Steel
6	TE40S336	Third gear assy	1	
8	TE40S534	Worm shaft for rotation	1	Steel
10	TE914125	Washer	1	Stainless steel
14	TE910852	Set screw	2	Stainless steel
15	TE40S343	Stand worm screw assy	1	
17	TE910562	Screw	1	Stainless steel
18	TE51A305	Screw	2	
19	TE51A505	Nut	2	
20	TE51B068	Fender washers	4	
21	TE40S564	Bevel Gear Z=16	2	Steel

Gunclean Toftejorg i40 D, Gear unit (continued)

Complete gear stand for rotation

Article no. TE40S333

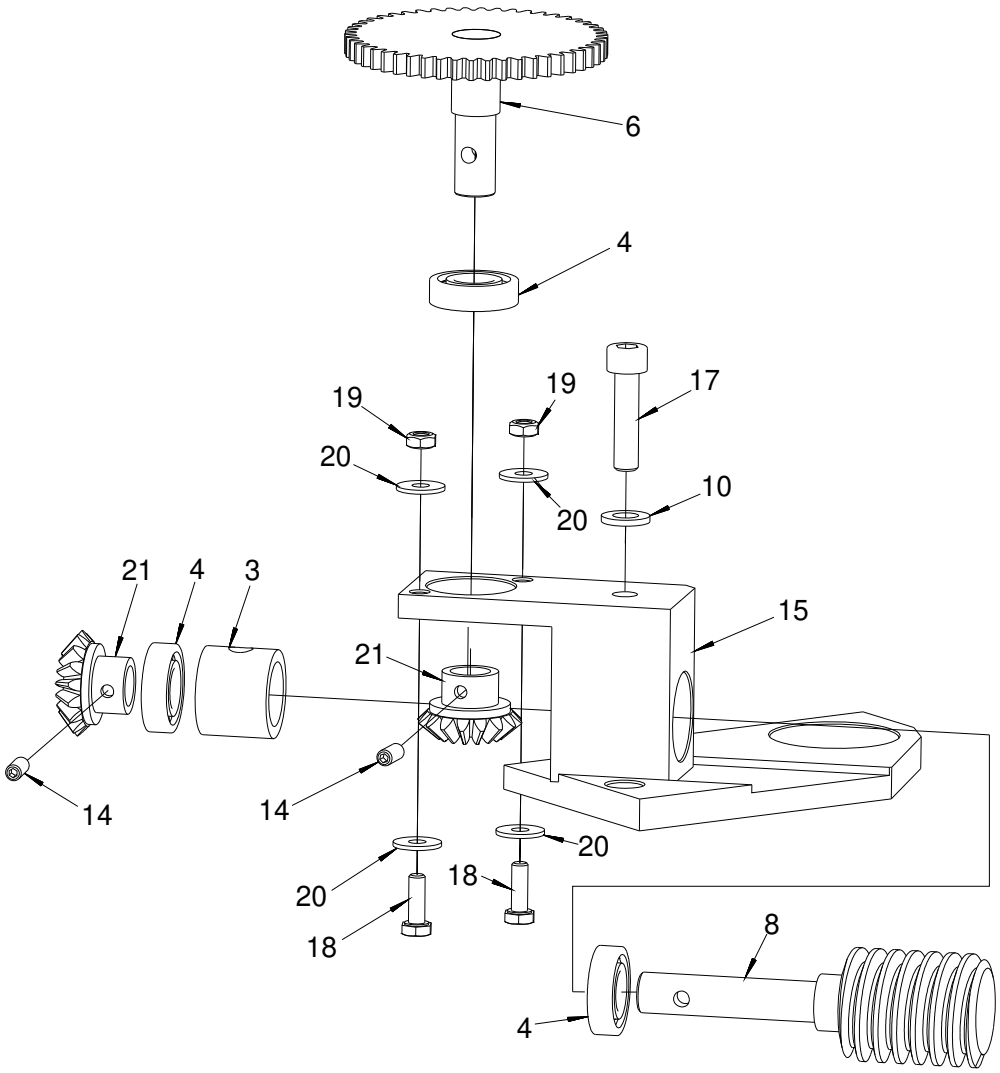

D102607

Gunclean Toftejorg i40 D, Inlet Housing Assembly

Spare part list

Reference list of parts, article no. TE40S310-L-XX

Pos	Drwg.No	Description	Pcs.	Material
1	TE40S627	Inlet housing for Valve, machined	1	Stainless steel
2	TE65S560	Gasket for Packing Box	1	Polymer
3	TE918221	Lipseal Furon	1	Polymer
4	TE65S520	Gasket for Turbine Cover	1	Polymer
5	TE40S681	Turbine Cover – long magnet holder shaft	1	Stainless steel
6	TE51F017	Ball	1	Ceramic
7	TE65S576	Inset for Turbine	1	Stainless steel
8	TE65S583	Wolfram Plate	2	Hard metal
9	TE65S630	Guide - machined	1	Stainless steel
10	TE65S618	Turbine 6 wings – hub 40 machined	1	Stainless steel
11	TE65S581	Carbon bushing for turbine system	3	Carbon
12	TE51A013	Set Screw	2	Stainless steel
13	TE918227	O-ring	1	Elastomer
14	TE918178	Bearing	1	Bronze
15	TE51U229	Plug w. valve	1	Technopolymer
16	TE51T027	O-ring	1	Elastomer
17	TE65S331	Hysteresis w. Turbine shaft	1	
18	TE40S552	Packing box for lifting rod	1	Stainless steel
19	TE51L153	Bearing	1	Oil bronze
20	TE51A571	Screw	4	Stainless steel
21	TE51T223	Lip seal	1	Elastomer
22	TE51T180	Gasket on spool	1	Polymer
23	TE914016	Nut	6	Stainless steel
24	TE910569	Screw	4	Stainless steel
25	TE914130	Washer	6	Stainless steel
26	TE40S535	Gasket gear box – inlet housing	1	Gasket
27	TE40S550	Connect.pipe – Gear / Packing box	1	Steel
28	TE51A141	Screw	8	Stainless steel

Gunclean Toftejorg i40 D, Inlet Housing Assembly

Assembly drawing

Article no. TE40S310-L-XX

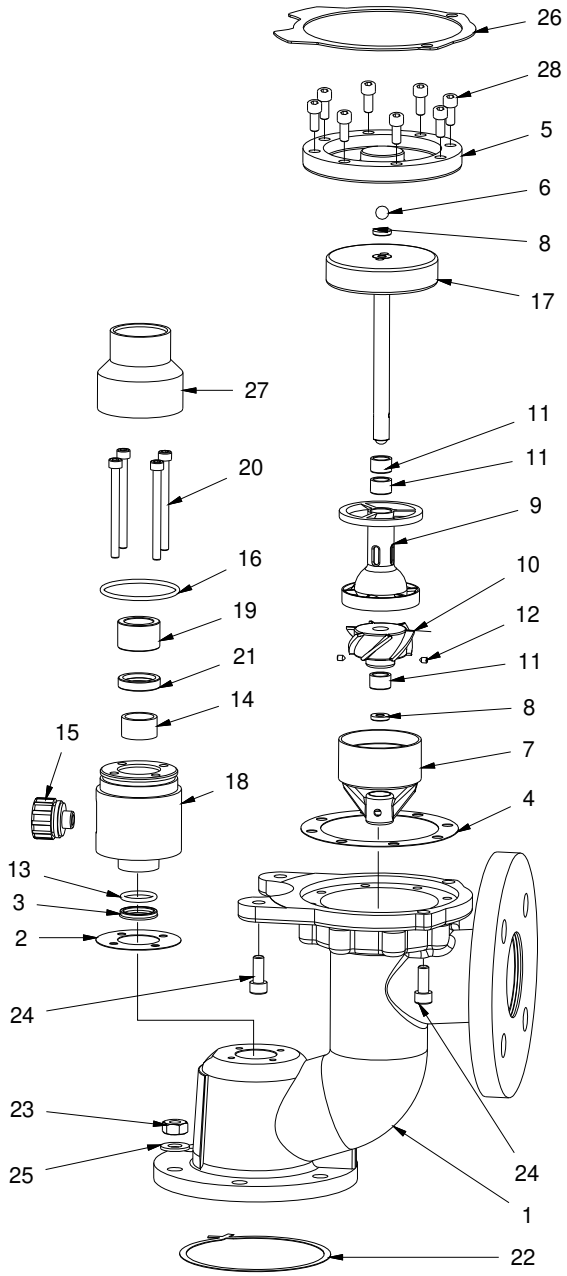

D102611

Gunclean Toftejorg i40 D, Inlet Housing Assembly

Valve Unit Assy P, spare part list

Reference list of parts, article no. TE52F067

Pos.	Part No.	Q'ty	Description		Material
	TE000136	1	2" Valve assy	11/2 ASA	
	TE52F067	1	2" Valve assy	Camlock 11/2	
	TE59A024	1	Oxygen		Polymer
232	TE52D008	1	Filter 11/2"		Stainless
233	TE000137	1	Male Adapter 11/2 ASA		Stainless
233	TE51Y164	1	Male Adapter Camlock		Stainless
236	TE51Y041	1	2" Valve flange not incl.		Stainless
237	TE000138	1	Dust Cap 11/2 ASA		Stainless
237	TE51Y033	1	Dust Cap 11/2" Camlock		Stainless
238	TE51K001	1	Chain		Stainless
241	TE000306	1	Gasket 11/2 ASA		Elastomer
241	TE000305	1	Gasket 11/2 ASA		Polymer
241	TE51T202	1	Gasket 11/2" Camlock		Polymer
242	TE51A517	4	Nut		Stainless
243	TE51B014	4	Washer		Stainless
244	TE51A223	4	Bolt		Stainless
246	TE51Y163	1	Adapter flange 11/2"		Stainless
247	TE51K031	2	Key ring		Stainless

Warning: When carrying out assembly or repair please note that the valve must be closed. Otherwise, the PTFE-sealing can be damaged.



Gunclean Toftejorg i40 D, Inlet Housing Assembly

Valve Unit, assembly drawing

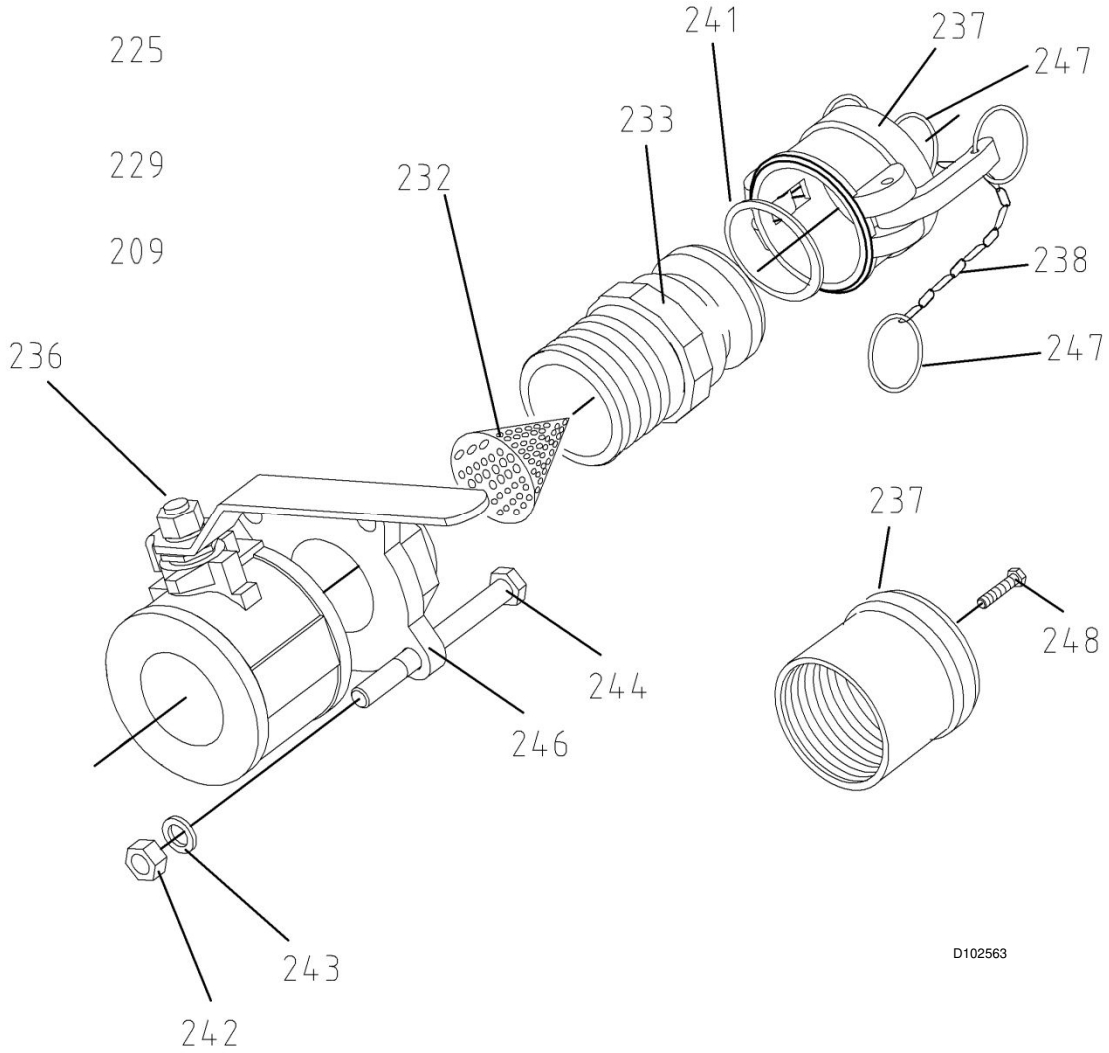

Gunclean Toftejorg i40 D, Down Pipe and Drive shaft

Reference list of parts

Pos.		Drwg.No	Description	Pcs.	Remarks
1		TE40D320-XX	Drive shaft	1	XX = Cleaner length
2	☐	TE65D370-XX	Down Pipe for Xm w. JIS 5K 200A flange	1	XX = Cleaner length
	☐	TE65D371-XX	Down Pipe for Xm w. Onomischi standard flange	1	XX = Cleaner length
	☐	TE65D372-XX	Down Pipe for Xm w. ISO DN150 PN16 flange	1	XX = Cleaner length
	☐	TE65D373-XX	Down Pipe for Xm w. JIS 5K-250A flange	1	XX = Cleaner length
	☐	TE65D374-XX	Down Pipe for Xm w. JIS 5K-150A flange	1	XX = Cleaner length
	☐	TE65D375-XX	Down Pipe for Xm w. JIS 5K-300A flange	1	XX = Cleaner length
	☐	TE65D376-XX	Down Pipe for Xm w. JIS 5K-550A flange	1	XX = Cleaner length
	☐	TE65D380-XX	Down Pipe for Xm w. JIS 5K-200A flange	1	XX = Cleaner length

Gunclean Toftejorg i40 D, Down Pipe and Lifting Rod

Assembly drawing

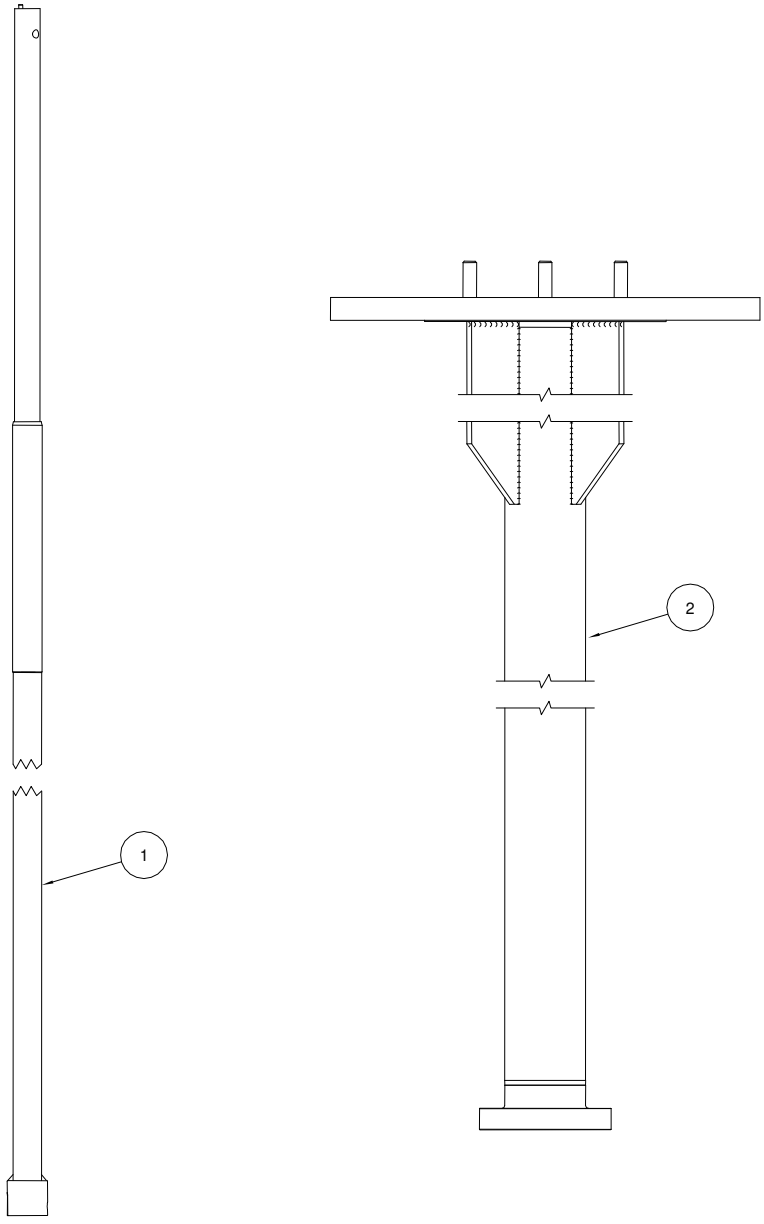

D102561 v. 2

Gunclean Toftejorg i40 D, Cleaner Head

Reference list of parts

Article no. TE73A310

Pos.	Ref. no.	No./Unit	Description	Material
1	TE20G565	1	Retainer spring	Stainless steel
2	TE20G563	1	Retainer ring	Stainless steel
3	TE20G570	1	Stem nut w. ball race	Stainless steel
4	TE20G318	2	Ball retainer w. balls	Polymer/Stainless steel
5	TE20G574	2	Ball race	Stainless steel
6	TE20G579	1	Liner	Polymer
7	TE73A560	1	Stem	Stainless steel
8	TE73A513	1	Body	Stainless steel
9	TE73B527	1	Hub	Stainless steel
10	TE51C105	1	Split pin	Stainless steel
11	TE724-2-16	1	Hub nozzle part	Stainless steel
12	TE73B510	1	Hub nut w. ball race	Stainless steel
13	TE73B509	1	Lip seal	Elastomer

Gunclean Toftejorg i40 D, Cleaner Head

Assembly drawing

Article no. TE73A310

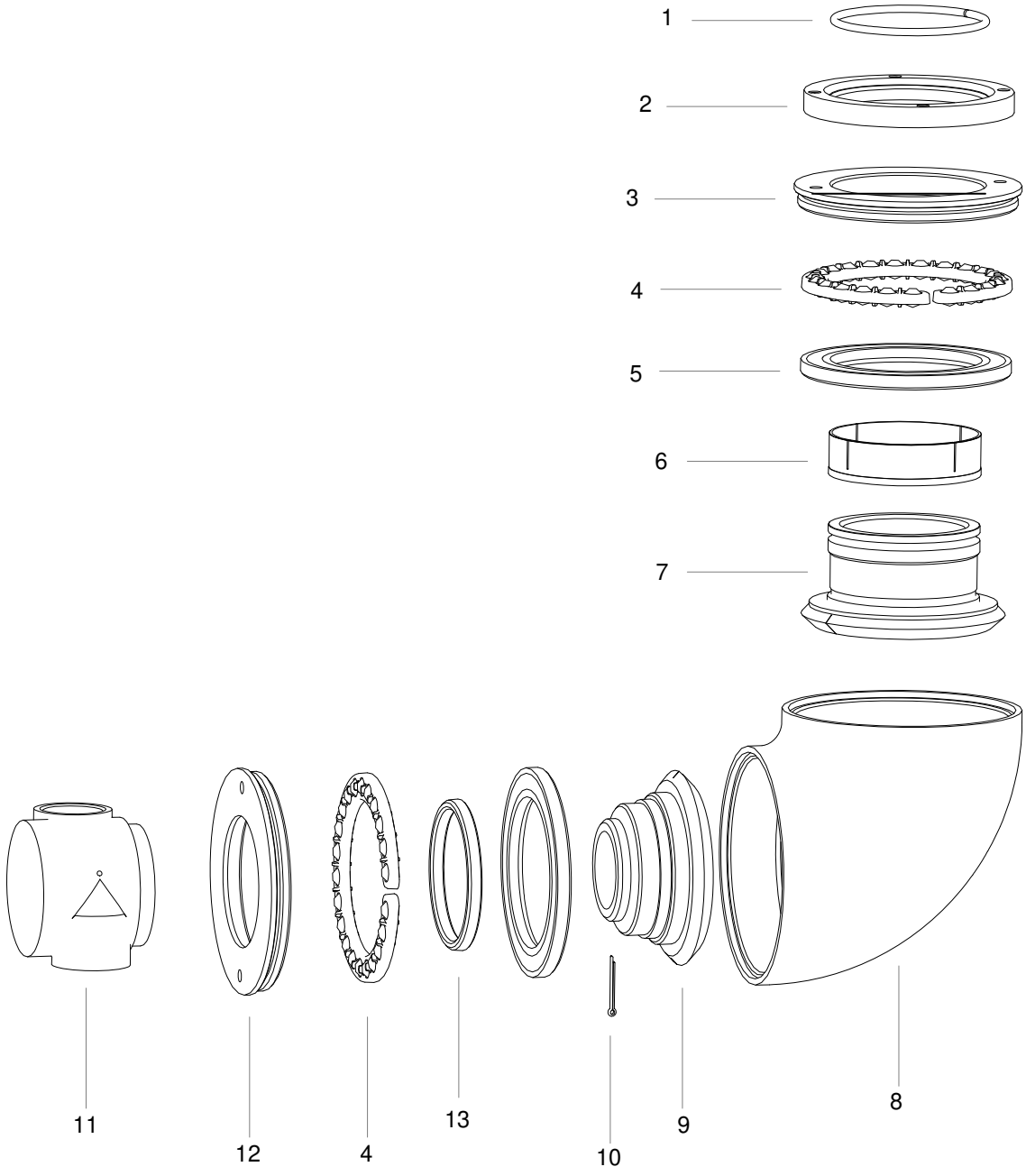

Service Kits

Minor Service Kit for Drive Unit, ref. TE55T400 includes

Part no.	Qty	Description	Included in	Pos.
TE900542M8	1	Washer	TE40D311	3
TE916302	1	O-ring	TE40D311	13
TE916430	1	O-ring	TE40D311	14
TE65S560	1	Gasket for packing box	TE40S310	2
TE918221	1	Lip seal	TE40S310	3
TE65S581	3	Bushing	TE40S310	11
TE918227	1	O-ring	TE40S310	13
TE51T027	1	O-ring	TE40S310	16
TE51T223	1	Lip seal	TE40S310	21
TE40S555	2	Bushing	TE40D330	8
TE51C239	1	Retaining ring	TE40D330	11
TE916307	3	O-ring	TE40S332	5

Major Service Kit for Drive Unit, ref. TE55T410 includes

Part no.	Qty	Description	Included in	Pos.
TE916321	1	O-ring	TE40D311	26
TE51L108	2	Ball bearing	TE40D330	3
TE65S520	1	Gasket for turbine cover	TE40S310	4
TE51L114	3	Ball bearing	TE40S333	4
TE55T400	1	Minor service kit DU		-

Service Kit for Cleaner Unit, ref. TE55T730 contains

Part no.	Qty	Description	Included in	Pos.
TE20G318	2	Ball retainer with balls	TE73A310	4
TE20G574	2	Ball race	TE73A310	5
TE51C105	1	Split pin	TE73A310	10
TE73B509	1	Lip seal	TE73A310	13
TE651	1	Locking wire 0.14m	TE73A310	-

Tool Kit

Article no. TE55T906

Pos.	Part No.	Quantity	Description
1	TE900080	1	Tool Box 400x200x160
4	TE900081	1	Hexagon bar wrench 2 mm
5	TE900082	1	Hexagon bar wrench 2.5 mm
6	TE900085	1	Hexagon bar wrench 5 mm
7	TE900086	1	Hexagon bar wrench 6 mm
8	TE918207	1	17mm Box wrench
9	TE900090	1	Retaining ring plier
10	TE81B111	1	Retaining ring plier
11	TE59A230	1	Padlock Ø25 for Tool Box

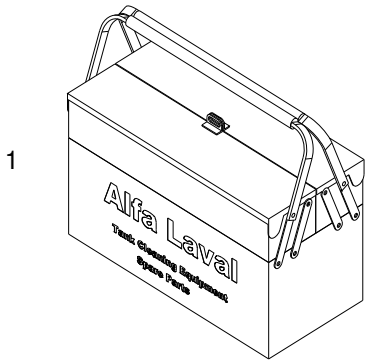

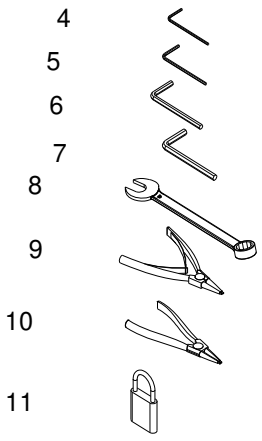

How to order Spare Parts and Claim Procedure

How to Order Spare Parts

On the Cross Sectional Drawing as well as on all instruction drawings, the individual parts have a pos. No., which is the same on all drawings. From the pos. No. the part is easily identified in the Reference Lists of Parts, page 22 - 34.

Individual parts should always be ordered from the Reference Lists of Parts, page 22 - 34. Ref. No. and Description should be clearly stated.

Please also quote the type of machine and serial No. This will help us to help you. The type and serial Nos. are stamped on the Gear house of the tank cleaning machine.

Claim Procedure

In case of failure that needs assistance from Alfa Laval Tank Equipment A/S, it is essential for our evaluation that the problem as well as the working conditions of the machine is described as detailed as possible.

For description of the working conditions, fill in copy of Claim Report - Working Conditions, which you will find at the back of this manual.

How to contact Alfa Laval Tank Equipment A/S

For further information please feel free to contact:

Alfa Laval Tank Equipment A/S
Baldershoej 19
P.O. Box 1149
2635 Ishoej
Denmark

Phone no.: +45 43 55 86 00
Fax no.: +45 43 55 86 01
www.alfalaval.com
www.toftejorg.com

Contact details for all countries are continually updated on our websites.

Service Card

Type of Machine : _____

Serial No. : _____

Configuration : Nozzle diameter : _____ mm

Impeller : _____ %

Guide : _____ %

Date	No. of Working Hours	Maintenance Actions/ Exchanged Parts	Remarks	Sign.
	0	Machine put into operation		

V. 94.2

Claim Report - Working Conditions

Ref. Claim Case : _____

Machine/Cleaner Type : _____ Serial No.: _____

Configuration

- Nozzles : _____ x ø _____ mm
- Turbine/Inlet Guide : _____ %

Working Conditions

Inlet pressure at machine/cleaner : _____

Type of Valve in inlet line : _____

Can hydraulic shock be disregarded: : ☐ Yes ☐ No

Inlet line flushed before installation of tank cleaner? : ☐ Yes ☐ No

Working hours before failure : _____ hours

Cleaning Programme

Cleaning media and conc.	Temperature	Time	Recirculation?

Is sterilising being used? : ☐ Yes ☐ No

Procedure (media/temp.)? : _____

Is steam injection being used for heating? : ☐ Yes ☐ No

Time: _____

Temperature: _____

Claim Report - Working Conditions

Condition of Cleaning Media

☐ Clean

☐ Contaminated with (nature and description)

☐ Chemicals/Solvents _____ ☐ High viscous

☐ Soluble ☐ Sticky/tenacious

☐ Low viscous ☐ Solidifying

☐ Hard particles/size _____ ☐ Crystallizing

☐ Soft particles/size _____

Has filter been installed in inlet line? ☐ Yes

Mesh size: _____ mm

☐ No

Is tank cleaner flushed with clean water after tank cleaning? ☐ Yes ☐ No

Type of Soilage/Tank Contents to be removed

Name, formula/concentration of material to be removed from tank : _____

What is material soluble in : _____

Nature of material:

☐ Volatile/explosive ☐ Sticky/tenacious ☐ Contains soft particles

☐ Low viscous ☐ Solidifying ☐ Contains hard particles/fibres

☐ High viscous ☐ Crystallizing

Is tank cleaner submerged in material? ☐ Yes ☐ No

Other information/Remarks

_____

_____

Date: _____ Sign.: _____

V. 98.1