onlyfire
GRILLS

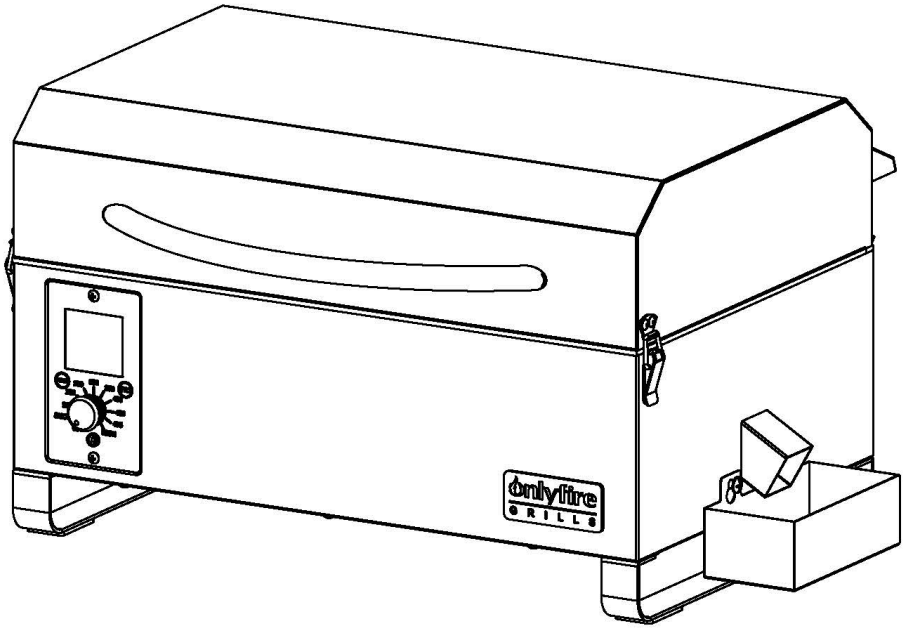

WOOD PELLET GRILLS

F-BRK6084

OWNER'S MANUAL

MON TO FRI, 8:00 A.M. - 5:00 P.M. PACIFIC STANDARD TIME
SERVICE CONTACT: 1-833-947-4557/1-833-ZGRILLS
EMAIL: .com
WEBSITE:

VN052021



CONTENTS

IMPORTANT SAFETY INFO 3

COMPONENT LIST 6

ASSEMBLY INSTRUCTIONS 8

INITIAL FIRING INSTRUCTIONS 13

SUBSEQUENT START-UP 14

OPERATING TIPS 15

MAINTENANCE & CLEANING 16

TROUBLESHOOTING 18

DIGITAL THERMOSTAT CONTROL WIRING DIAGRAM 20

Z GRILLS SUPPORT 21

3-Y LIMITED WARRANTY 22



SAVE THIS MANUAL FOR FUTURE REFERENCE

IMPORTANT SAFETY INFO

GENERAL WARNINGS

Please read this entire manual before installation and use of the pellet fuel-burning appliance. Failure to follow these instructions could result in property damage, bodily injury or even death.

Contact local building or fire officials about restrictions and installation inspection requirements in your area.

This grill is for outdoor use only. DO NOT use it in any enclosed area.

DO NOT store or use combustible materials or liquids near this appliance.

Keep children away while it is in use.

Maintain a safe distance between your grill and any combustible material.

DO NOT move your grill while operating or while it is hot. Wait until the grill is completely cold.

If a grease fire occurs, turn "off" and leave lid closed until the fire is extinguished. DO NOT unplug the power cord. DO NOT throw water on it. DO NOT try to smother the fire.

Clean and maintain your grill after each use.

DO NOT use your grill on rainy days.

DO NOT touch any part of your grill while it is hot. Serious bodily injury could result.

We suggest the use of heat-resistant gloves when operating this grill.

For convenient and safe assembly, use at least two people to assemble the grill.

Make sure the power cord is disconnected before performing any service or maintenance.

DO NOT place anything heavy on top of hopper lid. It is not a shelf and is a tip hazard.

Never use gasoline, gasoline-type lantern fuel, kerosene, charcoal lighter fluid, or

similar liquids to start or ‘freshen up’ a fire in this appliance. Keep all such liquids well away from the appliance when in use.

Do not use accessories not specified for use with this appliance.

NOTE: A MAJOR CAUSE OF FIRES IS FAILURE TO MAINTAIN REQUIRED CLEARANCES (AIR SPACES) TO COMBUSTIBLE MATERIALS. IT IS OF UTMOST IMPORTANCE THAT THIS PRODUCT BE INSTALLED ONLY IN ACCORDANCE WITH THESE INSTRUCTIONS.

PELLET RESTRICTIONS

This grill is designed for use of wood pellets only designed for burning in wood pellet grills. Do Not Use Pellet Fuel Labeled As Having Additives.

We suggest that you use Z GRILLS BBQ WOOD PELLETS, which are specifically made to work in our grills. There is no guarantee that other brands of pellets are suitable for use in Z GRILLS. And Z GRILLS assumes no liability for any loss, damage or injury caused by the use of any other brands of pellets.

Always keep the Pellet Hopper dry, the wood pellets will expand greatly, break apart and even jam the feed system if the pellets get wet or are exposed to high humidity.

CARBON MONOXIDE WARNING

Follow these guidelines to prevent this colorless, odorless gas from poisoning you, your family or others.

Know the symptoms of carbon monoxide poisoning: headache, dizziness, weakness, nausea, vomiting, sleepiness, and confusion. Carbon monoxide reduces the blood's ability to carry oxygen. Low blood oxygen levels can result in loss of consciousness and death.

See a doctor if you or others develop cold or flu-like symptoms while cooking or in the vicinity of this appliance. Carbon monoxide poisoning, which can easily be mistaken for a cold or flu, is often detected too late.

Alcohol consumption and drug use increase the effects of carbon monoxide poisoning.

Carbon monoxide is especially toxic to mother and child during pregnancy, infants, the elderly, smokers, and people with blood or circulatory system problems, such as anemia, or heart disease.

COMPONENT LIST

ITEM	QTY	DESCRIPTON
1	1	Chamber Lid
2	2	Lock Catch Fixing Plate
3	1	Lid Handle Tube
4	1	Warming Rack
5	1	Cooking Grid
6	1	Hopper Handle
7	1	Safety Net
8	1	Magnet
9	1	Hopper Assembly
10	1	Hopper inner-F
11	1	Hot Rod
12	1	Funnel Assembly
13	1	Digital Control
14	1	Baffle
15	2	Upper Hinge
16	2	Heat Insulation Cotton-1
17	1	Body Inner Plate-L
18	1	Heat Insulation Cotton-2
19	2	Body Inner Plate-F/B
20	1	Heat Insulation Cotton-3
21	1	Hopper inner-R
22	1	Hopper inner-B
23	1	Hopper Burner Assembly
24	1	Funnel
25	1	Body Left Plate
26	1	Firepot Handle
27	1	Temperature Rod Cover

ITEM	QTY	DESCRIPTON
28	1	Temperature Rod
29	2	Lower Hinge
30	1	Fixing Plate
31	1	Plug And Socket
32	1	Logo Plate
33	1	Body Assembly
34	2	Leg
35	2	Lock Catch
36	1	Power Cord
37	1	Body Back Plate
38	1	Heat Insulation Cotton-4
39	1	Body Inner Plate-B
40	1	Heat Insulation Cotton-5
41	1	Body Inner Plate-R Welds
42	1	Oil Cup
43	1	Grease Drain Pan
44	1	Grease Drain Pan Cover
45	1	Auger Driver Motor
46	1	Binder Plate-1
47	1	Nylon Pad
48	1	Auger
49	1	Binder Plate-2
50	1	Heat Insulation Cotton-6
51	1	Heat Insulation Cotton-7
52	1	Funnel Welds
53	2	Coil
54	1	Fan

HARDWARE PACKAGE LIST

ITEM	QTY	DESCRIPTON
A	6	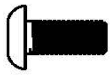 Bolt M5*12
B	4	 Bolt ST4.0*10

ITEM	QTY	DESCRIPTON
C	1	 Allen Wrench
D	1	 Screwdriver

ASSEMBLY INSTRUCTIONS

PARTS DIAGRAM

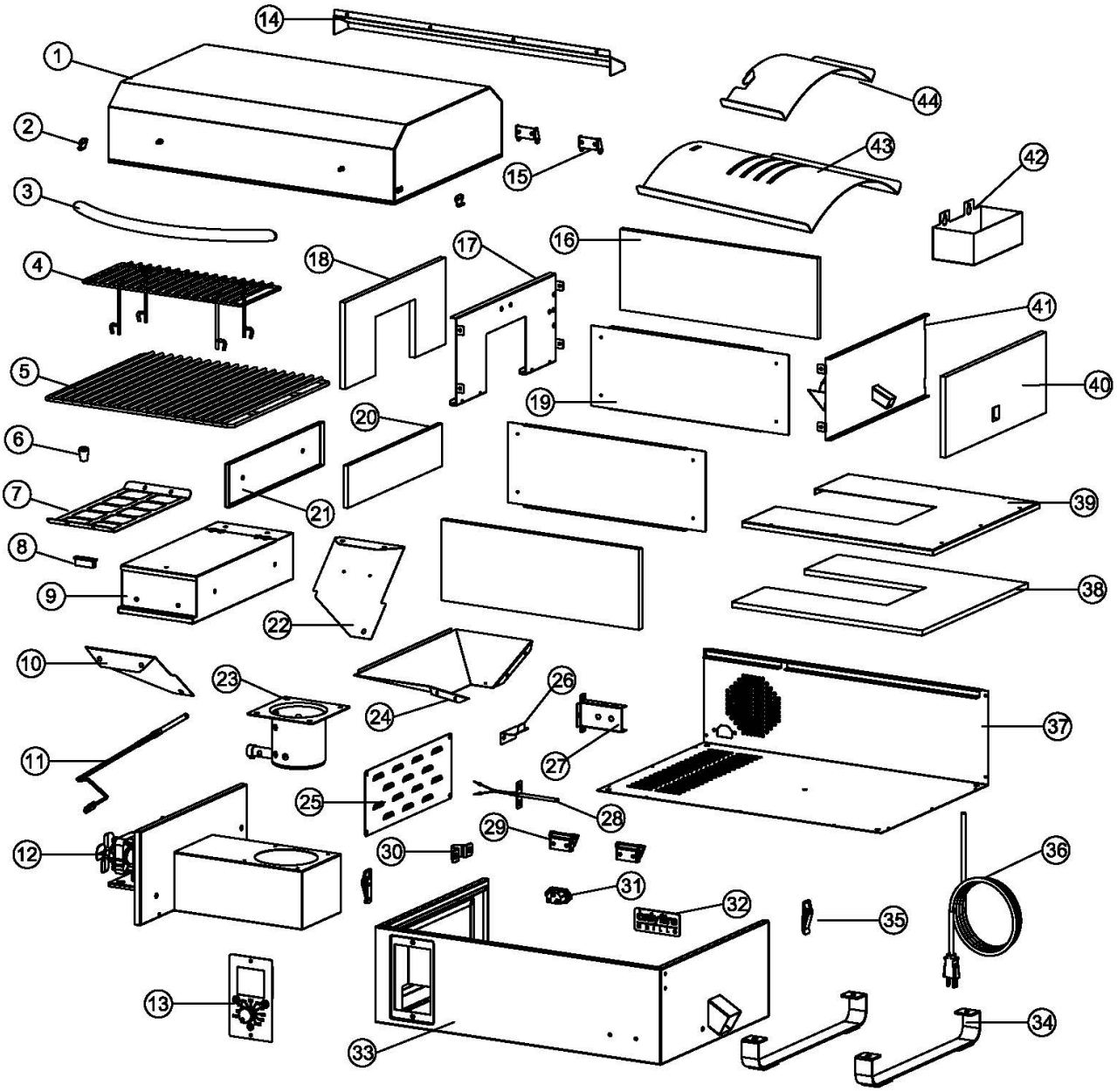

HOPPER BURNER ASSEMBLY

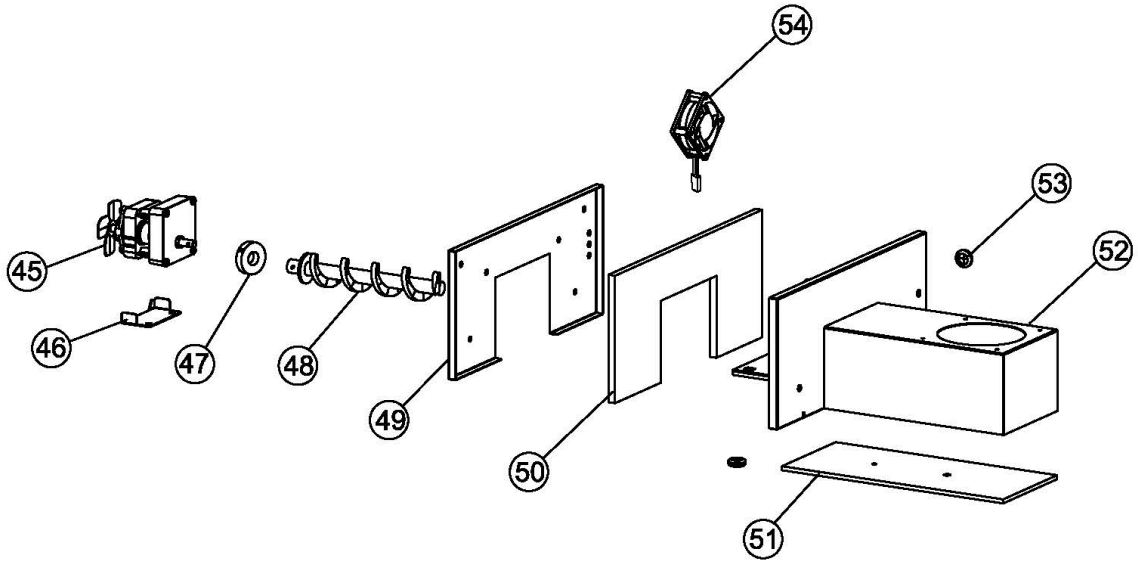

1.BODY FRAME ASSEMBLY

Turn the body upside down. Attach four legs (33) to the Grill Chamber Assembly by using Bolt (A). Use Allen Wrench (C) to tighten.

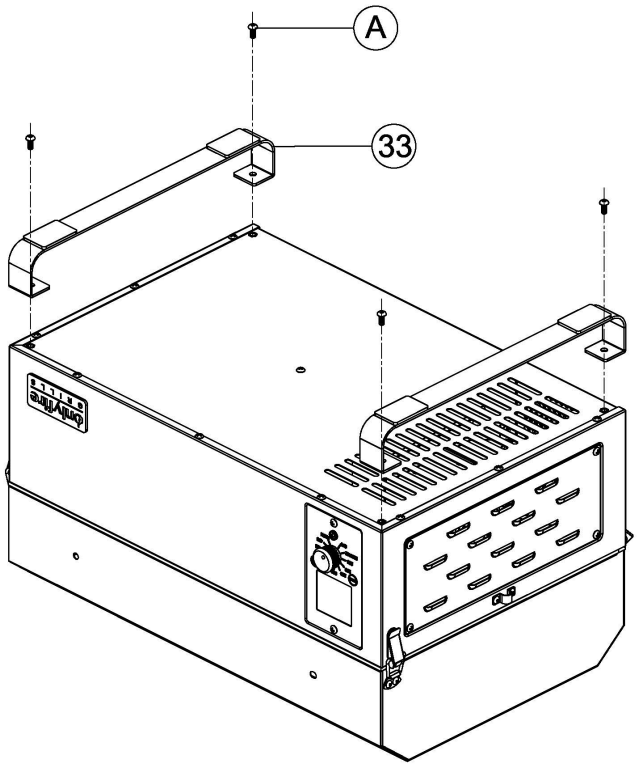

2.INSTALLING CHAMBER HANDLE TO LID

1. With the Lid (1) open, Use Allen Wrench (C) to tighten Bolts (A). Be careful not to over tighten.

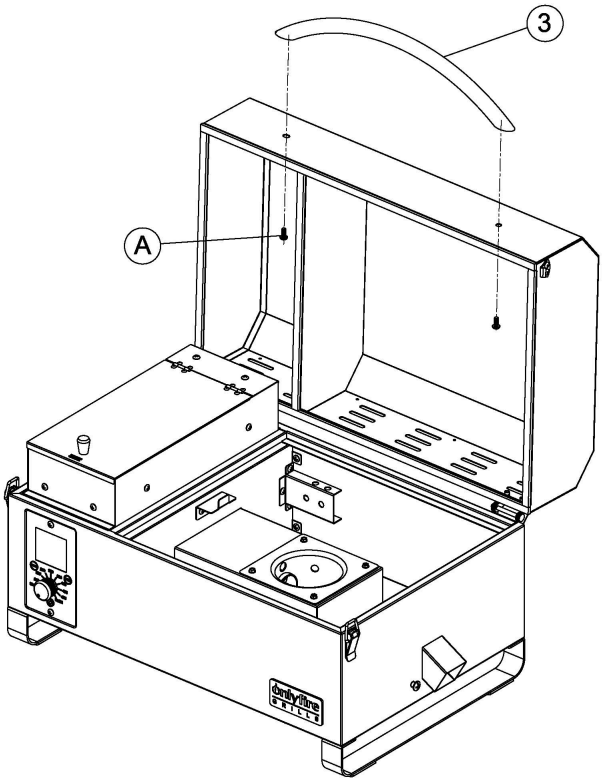

3. 组装挡雨板

将挡雨板用ST4.0*10(B)螺钉用螺丝钉(D),固定在上盖上面.

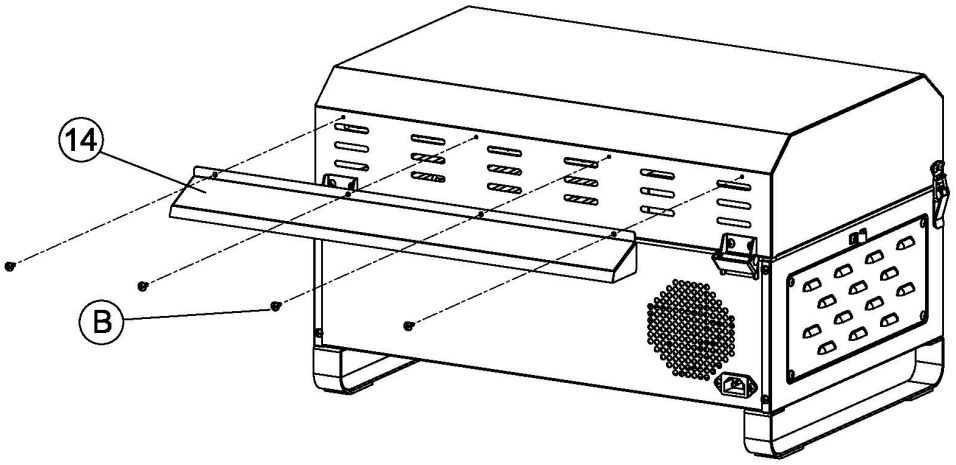

4.POSITIONING THE GREASE DRAIN PAN

Place the Grease Drain Pan (43/44) into the grill chamber assembly, as shown.

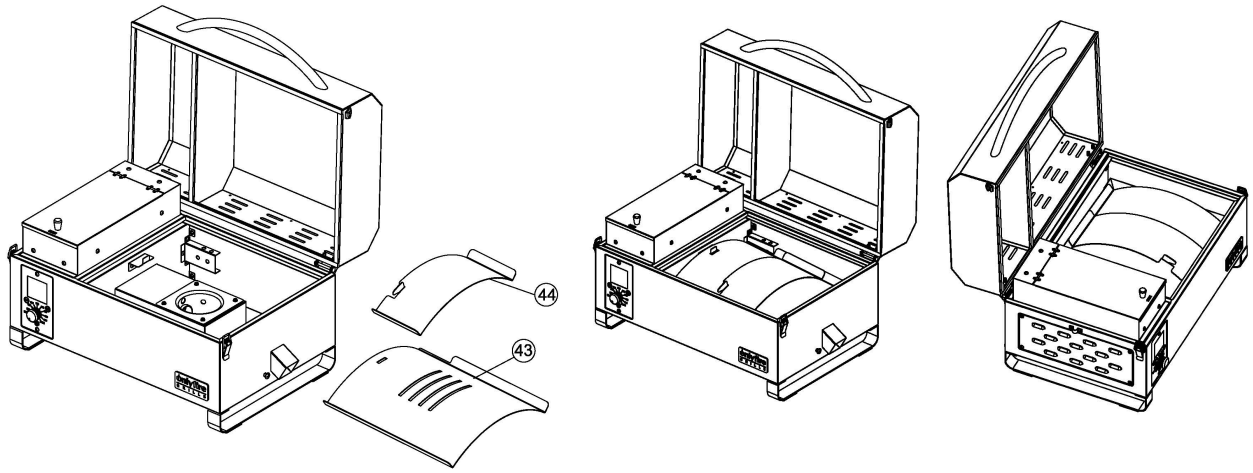

5.ATTACHING COOKING GRATE

Attaching the Porcelain Cooking Grate (5) in the chamber.

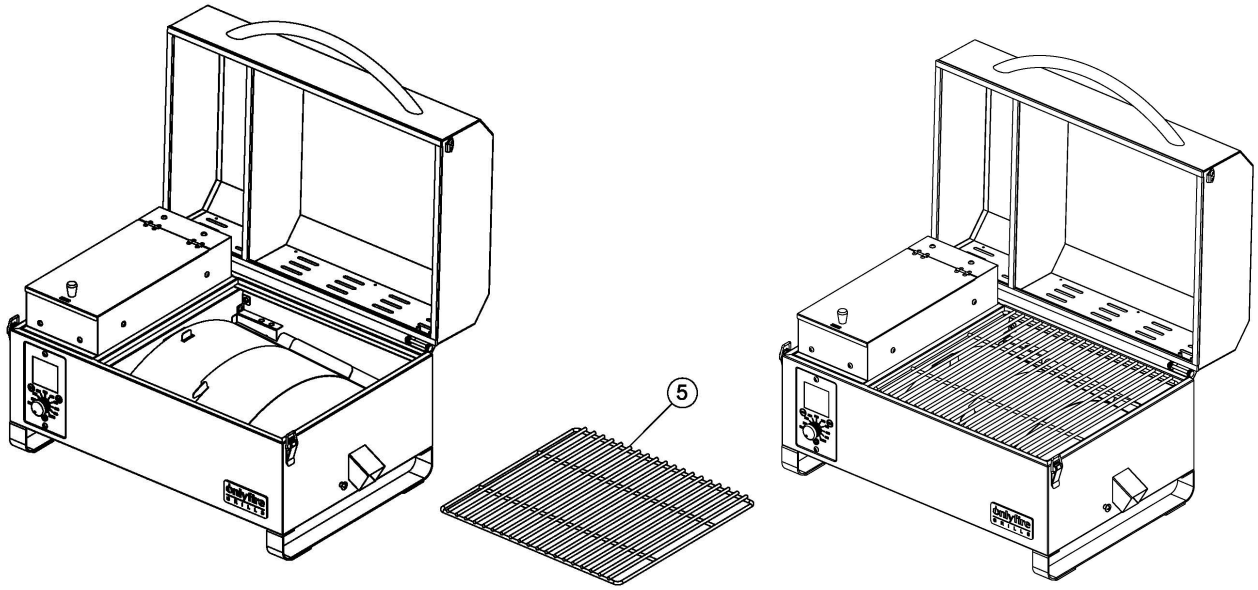

6.ATTACHING WARMING RACK

Attaching the Porcelain Warming Rack (4) in the Cooking Grate.

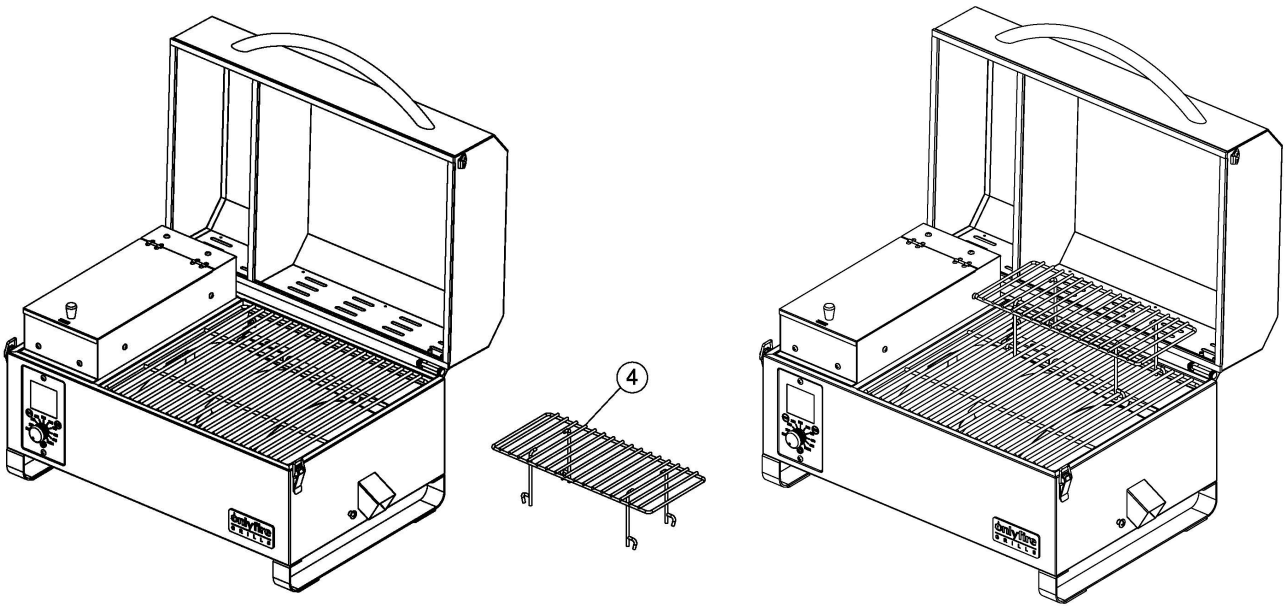

7.HANG ON THE GREASE BUCKET

Hang the Grease Bucket (42) on the Bolt, as shown.

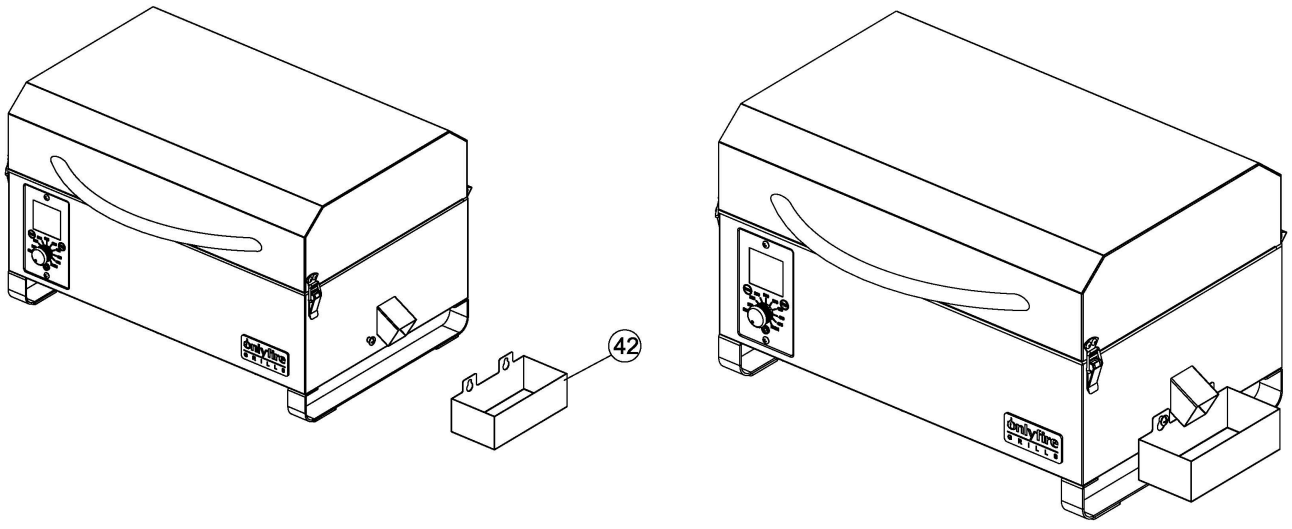

8.组装电源线

将电源线 (36) 插到品字电源线座上.

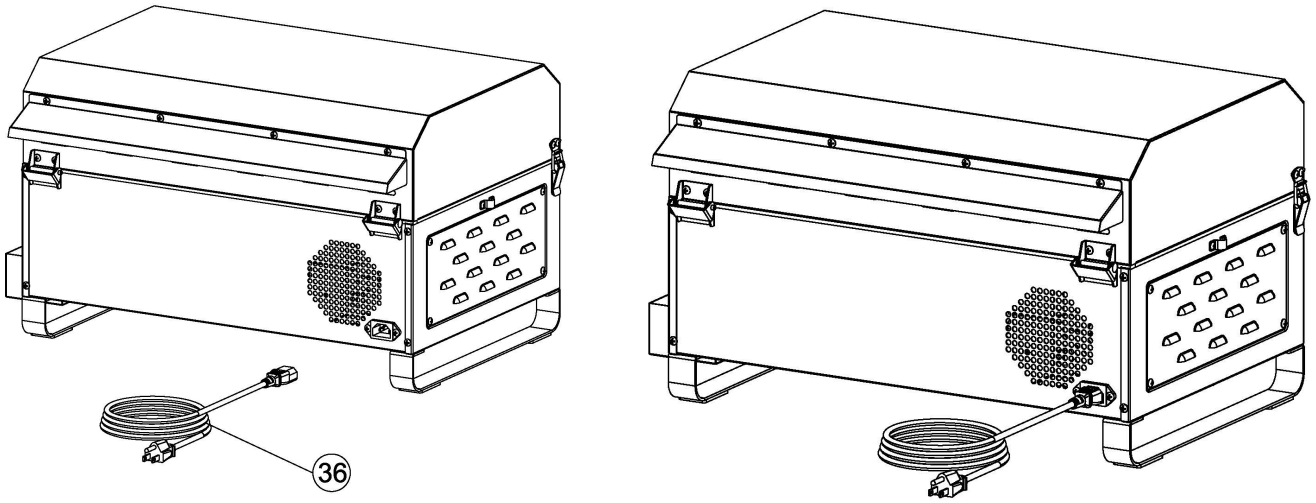

INITIAL FIRING INSTRUCTIONS

Please read this manual carefully and follow it step by step before starting your Z Grills for the first time and each time the grill runs out of pellets.

1.Remove the Porcelain Grills, Warming Rack and Grease Drain Pan from the interior of the grill.
2.Open the Pellet Hopper Lid, make sure there are no foreign objects in the Auger and Hopper.
3.With the Switch in the OFF(O) position, plug the power cord into a 110 Volt AC grounded outlet.
4.Turn on your Z Grill and turn the Temperature Dial to the SMOKE position. Please check the following things:
(WARNING: Please do not touch it!)

- Confirm the Auger is turning. (Wait for 1-2 minutes.)
- Hold your fingers above the Firepot to confirm the fan is blowing air through the Firepot.
- The hotrod will heat up and you should be able to sense the heat coming from it. (It takes approximately 1-2 minutes.)
- **You should see a temperature number displayed on your LCD DISPLAY. If you see something different displayed it is an ERROR CODE. NOTE: PLEASE SEE TROUBLESHOOTING FOR DETAILS ON ERROR CODES.**

5.Turn the Temperature Dial to OFF(O).
(Please note the draft fan will stay on for 10 minutes in this mode.)
6.Fill the Pellet Hopper with Pellets. Then turn the Temperature Dial to HIGH. It takes some time for the Pellets to travel through the tube, when the Pellets start to drop, turn the Temperature Dial to OFF(O). Leave grill until it shuts off automatically.
7.Turn the Temperature Dial to SMOKE. Allow the Pellets to come to full flame. Once flames are coming out of the Firepot, turn the Temperature Dial to OFF(O) and let the grill cool down.
[We suggest that you should wrap the Grease Drain Pan with heavy-duty aluminum foil before using because it is easy to clean.]
8.Place components back in place. Open the lid and turn the Temperature Dial to SMOKE. A few minutes later, when you see whitish-gray smoke coming out of the grill, close the lid and turn the Temperature Dial to any cooking setting desired.
9.Set Temperature Dial to HIGH and let grill run for 45 minutes at this setting to rid it of any foreign matter. This step must be done before cooking any food.
10.Please preheat the grill for 10 minutes before adding food. This makes your grill heat up faster and quickly reach your desired cooking temperature. Adding food sooner will slow down the heating process.

ALWAYS START THE GRILL ON SMOKE SETTING !
After the Pellets are ignited, you can turn the Temperature Dial to any cooking temperature desired. Please don’t turn the Temperature Dial to OFF(O) while in use.

SUBSEQUENT START-UP

ATTENTION: If the grill fails to light or the fire in the Firepot goes out while cooking, it is vital to follow these steps when sufficient pellets are still in the Pellet Hopper. Failure to follow the steps may cause a hazardous "over-firing" of your grill due to an excess of unburned pellets in the Firepot.

1.Turn OFF the appliance and unplug the Power Cord. After the grill cools down, remove all food, the Porcelain Grills, Grease Drain Pan and the Heat Baffle.

2.Remove all unburned pellets and ash from inside and around the Firepot (See instruction for proper handling and disposal of ash).

3.Plug the Power Cord and turn on the grill. Pellets should fall into the Firepot and the Hot Rod should begin to heat (it will start to turn red).

4.If this step is successful, you will see flames come out of the Firepot.

Then turn the Temperature Dial to SHUT DOWN CYCLE and let it cool down. Next, put components back in place, open the lid and turn the Temperature Dial to SMOKE. Wait a few minutes until you see whitish-gray smoke coming out of the grill, then close the lid and turn the Temperature Dial to any cooking setting desired.

5.If this step is not successful, see TROUBLESHOOTING or contact Z GRILLS Technical Support to help diagnose the problem.

SHUTDOWN CYCLE

- Auger turns off
- Fan continues to run for 10 minutes

After you have finished cooking, turn the Temperature Dial to Shutdown Cycle position. The function of this setting is to leave the Draft Induction Fan running for 10 minutes to burn redundant pellets in the firepot. After the fan runs for 10 minutes, the fan will stop and the controller will power off.

CAUTION: The main power switch will shut the power off to the controller and the Temperature Dial Knob switch will cut off power to the grill components only. When servicing the controller or any parts ensure that the power supply is disconnected by unplugging the grill to avoid a shock hazard.

OPERATING TIPS

1.Like all grills, the actual temperature of this grill and the cooking times will be affected by external temperature, humidity, wind conditions, quality of pellets, etc.

2.It is beneficial to shelter your grill from the wind. This will aid in temperature output, heat retention and heat recovery time when the lid is open.

3.Do not open the lid frequently, it will increase your cooking time. You can open the lid when you want the grill to cool down quickly.

4.Please preheat the grill for 10 minutes before adding food. This will allow your grill to heat up quickly and return to your desired temperature once food is added.

5.Never move your grill while in use.

6.Never put water into the Pellet Hopper or Firepot.

7.**WARNING: NEVER ADD PELLETS TO THE FIREPOT DIRECTLY. IT IS DANGEROUS.** If you run out of pellets and lose your fire while cooking, let the grill cool down and start again with the INITIAL FIRING INSTRUCTIONS.

8.We recommend you cover your Grease Drain Pan with heavy-duty aluminum foil and change it frequently. This is the simplest way to clean your Grease Drain Pan. Failure to clean the Grease Drain Pan, V-shaped Grease Drain and Grease Drain Tube may cause grease fires. If this situation happens, turn the Temperature Dial to SHUT DOWN CYCLE and keep the lid open until the fire is completely out. AT THE SAME TIME, BE CAREFUL NOT TO BURN YOURSELF. When the grill is completely cool, clean any grease accumulation from the V-shaped Grease Drain and the Grease Drain Pan. Replace the foil on the Grease Drain Pan. Then restart the grill and resume cooking.

MAINTENANCE & CLEANING

Your Z GRILL requires regular maintenance.

Make sure your grill is OFF, unplugged and completely cold before performing any maintenance and cleaning.

Grease

1.With regular use your grill will accumulate grease on the Flue Lining, the Grease Drain Tube, the V-shaped Grease Drain and the Grease Drain Pan. Always be sure these areas are clean and free of grease and debris. You should check and clean these areas regularly to reduce the risk of fire.

2.It is easier to remove accumulated grease when the grill is still warm (not hot).

BE CAREFUL NOT TO BURN YOURSELF. Heat-resistant gloves are recommended.

If too much grease is allowed to build up in the V-shaped Grease Drain or is allowed to plug the Grease Drain Tube, a grease fire could result. It is necessary to clean these area regularly. You can scarp the grease accumulation from inside the V-shaped Grease Drain and Grease Drain Tube by using a stiff, nonmetallic tool. Much of the loosened grease can be pushed down through the Grease Drain Tube and fall into the Grease Bucket. Wipe up remaining grease residue with paper towels or disposable rags.

Flue Pipe(Smoke Stack)

Remove the Chimney Cap Assembly, clean it with warm soapy water. Scrape the creosote and grease accumulation from inside of the vertical and horizontal sections of the Flue Pipe by using a stiff, nonmetallic tool such as a wooden paint stir stick. Once the creosote and grease residue has been loosened from the Flue Pipe Lining, much of it can be cleaned with paper towels or disposable rags. Do not spray water or other liquid cleaners onto the inside of the grill.

Outside surfaces

1.Use warm soapy water to wipe away grease. Do not use oven cleaner, abrasive cleansers or abrasive cleaning pads on the outside grill surfaces.

2.It is highly recommended that you use Z GRILLS Cover to protect your grill .

3.You can use a high-quality car wax on the outside surfaces of your grill to protect it’s finish.

Internal component

1.To clean the Porcelain-coated Grill Grates we recommend using a long-handled cleaning brush designed for Porcelain-coated Grates.

2.It is recommended that you clean your Grill Grates after each use.

3.Clean the inner RTD temperature probe after each use.

Ash

Clean the ash from the interior of the grill periodically. If excessive ash is in the firepot, it may cause the fire to go out. This is especially true in the SMOKE setting. A shop vac is an excellent tool to use for removing the ash. **WARNING: MAKE SURE THE GRILL FIRE IS OUT, THE UNIT IS OFF, UNPLUGGED AND COLD BEFORE ATTEMPTING TO CLEAN ASH FROM THE GRILL.**

TROUBLESHOOTING

CAUTION: Make sure the grill is completely cool and unplugged before you do any inspection, cleaning, maintenance or service work.

Problem	Potential Cause	Solution
Grill does not work properly	Power	Make sure the power cord is plugged in. Verify there is power at the electrical outlet.
	Fuse	Remove the digital control, check the fuse on the back. Replace the fuse if blown.
	Hot Rod	If both of the Draft Inducer Fan and the Auger Driver Motor are operating, the Hot Rod needs to be replaced. If one or both are not operating, please contact customer support.
	Wires & Connections	Check the wires and connectors to make sure they are fastened securely and not damaged. Contact customer support if you need help.
	Auger Drive Motor	Locate the small fan motor blade on the back of the auger drive motor. Turn unit on. If the fan does not turn on then the Auger Drive Motor needs to be replaced.
Fire goes out	Too much ash	Clean the ash. Refer to MAINTENANCE & CLEANING.
How to start	SMOKE setting	Start your grill on the SMOKE setting with the lid open. After 5 minutes, close the lid and turn to any temperature setting desired. Read the INITIAL FIRING INSTRUCTIONS carefully.

Unexpected grill temperature is displayed	External Factor	Grill temperature is influenced by environmental factors such as high temperature, wind and direct sun. Place unit in shaded area. Open the lid to reduce inside temperature. After start your grill in 40 minutes, the grill will reach your desired temperature.
Excess or discolored smoke	Pellets	Replace moist pellets with fresh dry pellets.
Get your new parts	Contact Z GRILLS Customer Service or your Z GRILLS dealer to place an order	When contacting customer support please have the following information available: Your authorized Z Grills dealer, your name, phone number, address, your Z Grill serial number and part identification number. Your part number is listed on the COMPONENT LIST.

ERROR CODES

LEr (Low Temperature Alarm)

- Grill temperature was below 120℉ for more than 20 minutes.

HEr (High Temperature Alarm)

- Grill temperature reached 550℉.

Er 1

- Ensure temperature probe is properly connected to the controller board.

Er 2

- Temperature dial security alarm.

Turn the Temperature dial to SHUT DOWN CYCLE, turn off the grill and then turn it on. Then you can turn the Temperature Dial to any cooking temperature desired.

WARNING: DO NOT TURN OFF THE SWITCH WHILE THE FAN IS STILL WORKING ON THE SHUT DOWN CYCLE, THE GRILL WILL AUTOMATICALLY SHUT OFF WHEN THE CYCLE IS DONE. INTERRUPTION OF THE SHUT DOWN CYCLE COULD RESULT IN A FIRE IN THE HOPPER CHAMBER.

DIGITAL THERMOSTAT CONTROL WIRING DIAGRAM

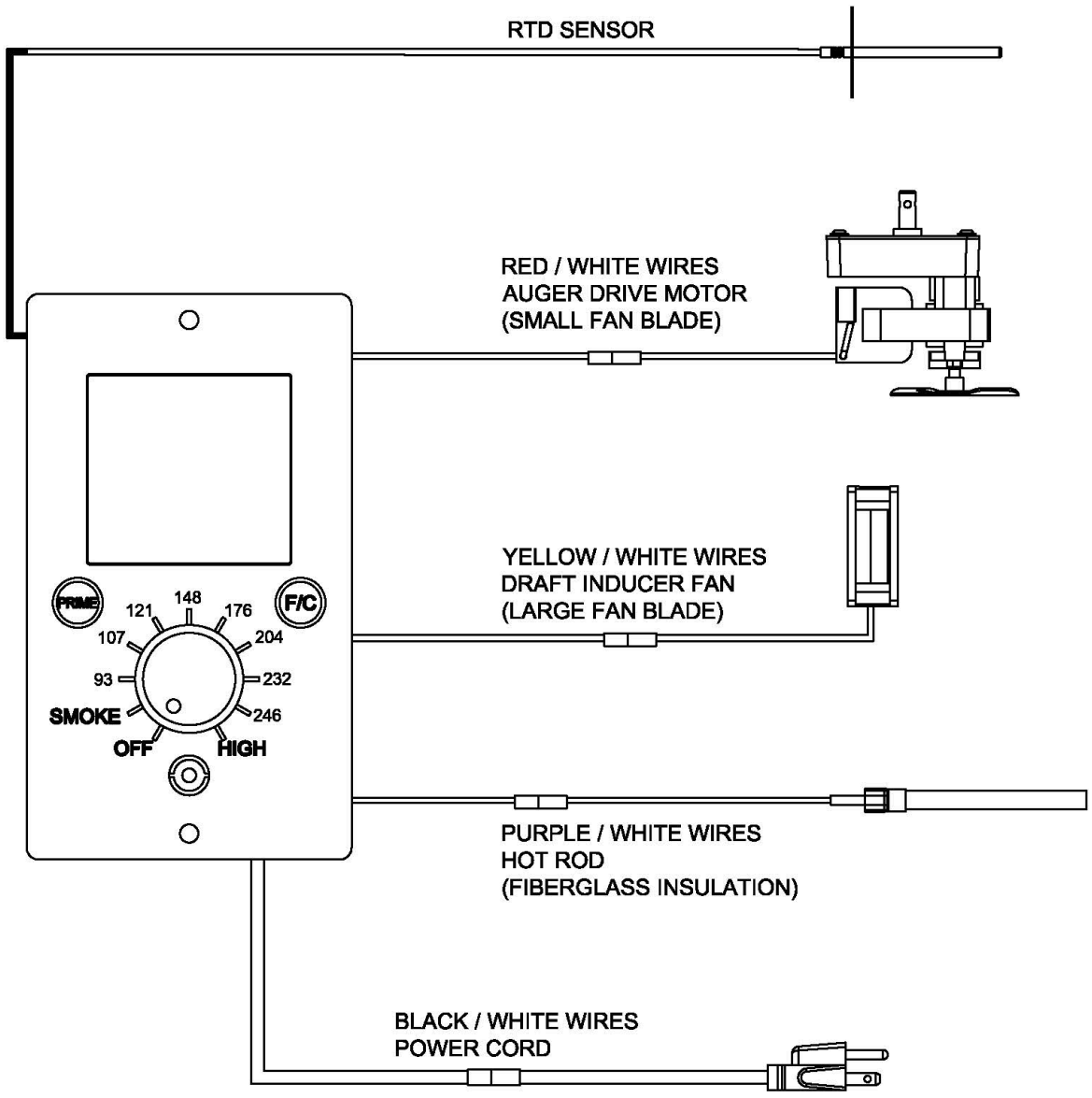

Z GRILLS SUPPORT

Thank you for purchasing a Z GRILL!
If you have any question, please contact customer support or your Z GRILL dealer.
Z GRILLS, INC. offers the best technical and sales support in the industry.
When calling customer please be prepared to provide the following information:

1.Dealer's name and date of purchase
2.Purchaser's name, phone number and address
3.Z GRILLS model number, serial number and part identification numbers
4.Please be prepared to describe your problem accurately so we can help you resolve your issue
5.Providing pictures or videos is beneficial

Z GRILLS CUSTOMER SERVICE

MON TO FRI, 8:00 A.M. - 5:00 P.M. PACIFIC STANDARD TIME

SERVICE CONTACT: 1-833-947-4557/1-833-ZGRILLS

EMAIL: support@zgrills.com

WEBSITE: www.zgrills.com

Onlyfire
3-YEAR LIMITED WARRANTY

Onlyfire, Inc. provides a 3-year warranty from the date of purchase by the original owner. This warranty applies to defects in all materials and workmanship. During the warranty period, Onlyfire, Inc. will at its option repair or replace defective parts or units.

This limited warranty does not apply to paint, firepot, grill cover or damage caused from corrosion. Onlyfire shall not be liable for transportation charges, labor costs or export duties.

Onlyfire, Inc. takes every precaution to utilize materials that retard rust including the use of high-temperature paint where advisable. Even with these safeguards, the protective coating can be compromised by various substances and conditions beyond Onlyfire' control. Humid environment, high temperature, chlorine, insecticide, salt and disinfectant are some of the substances that can affect paint and metal coatings. For these reasons, the limited warranties do not cover rust or oxidization, unless there is loss of structural integrity on the grill components.

Onlyfire, Inc. shall not be liable if you install, operate, clean or maintain your grill without following the owners' manual instructions. Misuse, abuse, alteration and natural disasters are not included in this warranty.