swisherinc.com

OWNER'S MANUAL

MODEL NO.

STARTING SERIAL #:
L108-043001

RTB115441
RTB12544
RTB12544-CA
RTB134412V
RTB14544
RTB14544-CA
POLB10544HD
POL12544X
POL14544X
POL14544X-CA
POL12544X-CA

CAUTION:
Read and follow all Safety Rules and Instructions Before Operating This Equipment

OBS Rev. 08-043

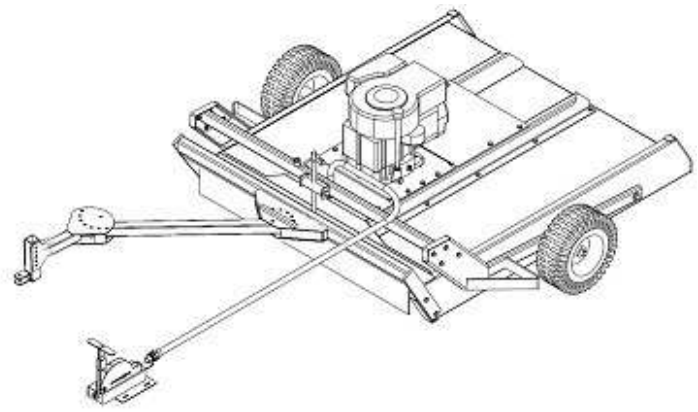

44" ROUGH CUT TRAIL CUTTER

Assembly
Operation
Service and Adjustment
Repair Parts

1602 CORPORATE DRIVE, P.O. BOX 67, WARRENSBURG, MISSOURI 64093
PHONE (660) 747-8183 FAX (660) 747-8650

Manufacturing quality lawn care equipment since 1945

Made In The USA

10292

LIMITED WARRANTY

The manufacturer's warranty to the original consumer purchaser is: This product is free from defects in materials and workmanship for a period of one (1) year from the date of purchase by the original consumer purchaser. We will repair or replace, at our discretion, parts found to be defective due to materials or workmanship. This warranty is subject to the following limitations and exclusions:

1)	Engine Warranty	All engines utilized on our products have a separate warranty extended to them by the individual engine manufacturer. Any engine service difficulty is the responsibility of the engine manufacturer and in no way is Swisher Mower Co., Inc. or its agents responsible for the engine warranty. The Briggs & Stratton Engine Service Hot-Line is 1-800-233-3723. The Tecumseh Engine Service Hot-Line is 1-800-558-5402. The Honda Engine Service Hot-Line is 1-800-426-7701.
2)	Commercial Use	This product is not intended for commercial use and carries no commercial warranty.
3)	Limitation	This warranty applies only to products which have been properly assembled, adjusted, and operated in accordance with the instructions contained within this manual. This warranty does not apply to any product of Swisher Mower Co., Inc., that has been subject to alteration, misuse, abuse, improper assembly or installation, shipping damage, or to normal wear of product.
4)	Exclusions	Excluded from this warranty are normal wear, normal adjustments, and normal maintenance.

In the event you have a claim under this warranty, you must return the product to an authorized service dealer. All transportation charges, damage, or loss incurred during transportation of parts submitted for replacement or repair under this warranty shall be borne by the purchaser. Should you have any questions concerning this warranty, please contact us toll-free at 1-800-222-8183. The model number, serial number, date of purchase, and the name of the authorized Swisher dealer from whom you purchased the mower will be needed before any warranty claim can be processed.
THIS WARRANTY DOES NOT APPLY TO ANY INCIDENTAL OR CONSEQUENTIAL DAMAGES AND ANY IMPLIED WARRANTIES ARE LIMITED TO THE SAME TIME PERIODS STATED HEREIN FOR ALL EXPRESSED WARRANTIES. Some states do not allow the limitation of consequential damages or limitations on how long an implied warranty may last, so the above limitations or exclusions may not apply to you. This warranty gives you specific legal rights and you may have other rights, which vary from state-to-state. This is a limited warranty as defined by the Magnuson-Moss Act of 1975.

TABLE OF CONTENTS

WARRANTY……...….2
INTRODUCTION……..3
SAFETY..…….3-4
ASSEMBLY……..…….4
OPERATION……5-7
CUTTER MAINTENANCE..……..8
TROUBLESHOOTING……9
DECALS…..…….……10
PARTS BREAKDOWN……11-17

Thank you for choosing Swisher's 44 '' Trailcutter. Before operating your cutter, please read, understand and follow all of the safety precautions and other instructions explained in this manual . As with all power equipment, lawn mowers,and cutters can be potentially dangerous if improperly used.

SAFETY PRECAUTIONS



This Safety Alert Symbol indicates important messages in this manual. When you see this symbol, carefully read the message that follows and be alert to the possibility of personal injury.

Read this manual completely. This machine can amputate hands and feet, and throw objects. Failure to observe the following safety instructions could result in serious injury or death.

- Read the manual. Learn to operate this machine safely.
- Always disconnect the spark plug wire and place the wire where it cannot contact the spark plug, to prevent accidental starting the engine when setting up, transporting, adjusting or making repairs.
- Keep all shields and guards in place.
- Understand the speed, steering and stability of this machine. Know the positions and operations of all controls before you operate this machine. Check all of the controls in a safe area before starting to work with this machine.
- Allow only responsible adults who are familiar with these instructions to operate this machine. **Never allow children to operate this machine.**
- Clear the area of objects such as rocks, toys, wire, etc. that can be picked up and thrown by the blade.
- Be sure the area is clear of other people before mowing. Be aware of the cutters discharge direction and do not point at anyone. **Stop the machine** if anyone enters the cutting area. Children are often attracted to the machine and the mowing activity. ***Never assume that children will remain where you last saw them.*** Keep children under the watchful care of another responsible adult.
- **No riders!**
- Do not put hands or feet near or under rotating parts.
- Do not mow in reverse. **Always look down and behind before and during backing.**

- Turn off the blades when not cutting. Before leaving the machine, turn off the blades and stop the engine.
- Watch for traffic when operating near or crossing roadways.
- Do not operate the cutter if it has been dropped or damaged in any manner or if the mower vibrates excessively. Excessive vibration is an indication of damage. Repair cutter as necessary.
- Dress properly. Do not operate the cutter when barefoot or wearing open sandals. Wear only solid shoes with good traction when cutting.
- Never allow operation by untrained persons.
- Do not operate the machine while under the influence of alcohol or drugs.
- Do not operate on slopes greater than 15 degrees.
- Never tamper with safety devices. Check their proper operation regularly.
- Stop and inspect the equipment if you strike an object. Repair, if necessary, before restarting. Never make adjustments or repairs with the engine running.
- Cutter blades are sharp and can cut. Wrap the blades or wear gloves, and use extra caution when servicing them. Do not operate at too fast a rate.
- Return lever to its vertical position to disengage blades.
- The braking system is applied when the blades become disengaged. It is designed to bring the blades to a quick stop (approximately 7 seconds). Each Trailcutter brake system has been set at the factory. For safety, the consumer should not alter the braking system.

ASSEMBLY

- Disengage spark plug wire and place where it cannot make a connection.
- Refer to Figure 2 p.11. Attach hitch assembly parts to front of mower . Insert 3/8-16 X 2 ½ through plate and attach 3/8-16 nut to the bottom. Tighten nut tight until tube is clamped then back off ½ turn to allow tube to pivot.
- The L hitch can be adjusted up or down to level the deck from front to back
- Check engine oil. All engines are filled with oil at the factory. Verify oil level and add if necessary before starting engine. (See Engine Owner's Manual)
- Verify fuel level and add if necessary before starting engine.
- Check the battery (if so equipped). If battery is put into service after the "month & year" of the date on the battery, then it may need to be charged with a 12 volt battery charger for a minimum of 1 hour, but no more than 2 hours at a rate of 6 to 10 amps.
- Attach battery cable(s) to battery. (if so equipped) Red wire to positive (FIRST) and black wire to negative (SECOND).
- Reconnect spark plug wire.
- (Refer to Owner's Manual p. 5) For proper operating procedures.

OPERATING YOUR TRAILCUTTER



The operation of any mower can produce foreign objects to be thrown into the eyes, resulting in severe eye damage. Always wear certified safety glasses or wide-vision safety goggles over spectacles before staring any cutting machine and while operating such a machine.



The operation of any cutter produces sound waves that are damaging to the human ear. Ear protection is recommended.



CAUTION! Tragic accidents can occur if the operator is not alert to the presence of children. Children are often attracted to the machine and the mowing activity. ***Never assume that children will remain where you last saw them.***

INTENDED USE

The 44" Rugged Cut Trailcutter is designed to clear dense areas of grass and cut saplings up to 1-1/2 inch thick on meadows and small estates. **It is not intended to create a finish cut on lawns**.Your Trailcutter should be towed behind an ATV, golf cart, lawn tractor or other approved vehicle. It is not recommended for speeds exceeding 5 MPH.

ATTACHING TRAILCUTTER TO TOW VEHICLE

- Back vehicle up to desired towing position.
- Offset the Trail Cutter to the side opposite the tow vehicle discharge (if any). This prevents the tow vehicle from throwing grass into Trailcutter engine.
- Bolt swivel hitch (H10) to tow vehicle receiver. If tow vehicle has a ball hitch, the ball must be removed before swivel hitch can be fastened.
- Attach tow hitch and the "L" hitch to the swivel hitch. (Ref Fig 2) The hitch pin (H11) should go completely through both the swivel and "L" hitches and clipped to prevent accidental separation. Check that all hardware is secure at both the tow vehicle and the Trailcutter.

TRANSPORTING CUTTER

- Stop Trailcutter.
- Place Trailcutter deck in its highest position.
- When transporting unattached from tow vehicle, remove spark plug wire and place it where it cannot contact the spark plug.

STOPPING THE ENGINE

- Make sure the tow vehicle parking brake is set
- Disengage cutting Blades
- Reduce engine to idle speed and allow engine to run momentarily for cooling
- Turn the key to the off position

ENGAGING BLADES

Note: Do not attempt to start the unit with the T-handle console in the **'' ENGAGED ''** position.

• Engage blades by pulling down the T-handle lever into the horizontal position.

• Return lever to the vertical position to disengage blades. **See detail on page 14 figure – 8**

•The braking system is applied when the blades become disengaged. It is designed to bring the blades to a quick stop (approximately 7 seconds.) Each TrailCutter brake system has been set at the factory the consumer should not alter any part of the brake system.

BREAKING IN YOUR CUTTER

- Set the vehicle parking brake and chock the wheels to prevent accidental rolling.
- While the engine is running, slowly, engage blade control.
- In a safe environment, (i.e. no children or pets) allow blades to rotate and engine to idle for 5 minutes, breaking in the belt for a longer life.
- Stop cutter.

STARTING THE ENGINE

See engine manufacturer's recommendations for the type and amount of oil and fuel used.

- Make sure the tow vehicle parking brake is set, mower is level, and blades are disengaged. Engine must be level to accurately check and fill oil. Do not overfill.
- Check spark plug wire, oil, and fuel.
- Check all electrical connections for build-up of debris.
- Set engine idle to "CHOKE" position.
- Turn key to the "RUN" position.
- Pull rope with a single fluid motion.
- (12V models only) Turn key to the "RUN" position, then to the "START" position.
- Set engine idle at maximum RPM for best performance.
- Allow engine to run a few moments before engaging blades.



CAUTION: SHUT OFF THE CUTTER ENGINE AND REMOVE SPARK PLUG WIRE FROM SPARK PLUG BEFORE MAKING ANY ADJUSTMENTS TO THE CUTTER.

FRONT TO BACK ADJUSTMENT

For best cutting results, the cutter deck should be parallel to the ground. To check parallel adjustment, measure the distance from the bottom edge of the deck in both the front and rear of the deck. This adjustment is best done while the tow vehicle and Trailcutter are connected.

- Remove bolt and nut from the "L" hitch (Ref Fig 2).
- Raise or lower hitch section to obtain proper front to back adjustment.
- Connect bolt and nut in "L" hitch securely, Then rotate nut counter- clockwise ½ turn,"L" hitch should pivot freely.Bolt must go completely through nut (but do not over tighten). **See figure – 2, page 11**

CUTTER HEIGHT ADJUSTMENT

- There is approximately 4 inches of height adjustment.
- Rotate height adjust crank handle in a clockwise direction to lower the mower deck. counter-clockwise direction to lift the mower deck.
- Dense areas of material should be cut twice.
- Push handle down to lock height position.

TOW HITCH OFFSET

- When offsetting the cutter do so to the side opposite the discharge of the tow vehicle.
- Swisher recommends if the tow vehicle is equipped with a mid-mount mower to overlap the cut approximately 6". This may vary depending on mowing terrain, obstacles, and/or tow vehicle. Always keep safety the first priority.
- Always keep the tow vehicle cutter raised higher than the Trailcutter
- To change the offsetting position both ball-lock pins should be removed (Figure Two). The hitches will swivel around remaining bolts. Set hitches to desired positions and return ball-lock pins, making sure they go through the hitch tubing and the semi-circled hole patterned plates.

STARTING TO CUT

- Adjust the cutting height.
- Double check vehicle to cutter attachment.
- Start mower engine and set throttle to "FAST" for best cutting performance.
- Slowly engage T-handle lever.**see figure-8 page 14**
- Carefully mount tow vehicle and start mowing at a slow travel speed.

STOPPING THE CUTTING SESSION

- Bring tow vehicle to a complete stop, set the parking brake and disengage blades.
- Turn key switch to the "OFF" position.
- Always remember to remove keys to avoid irresponsible usage.

SUGGESTED CUTTING PRACTICES

- Operate cutter engine at full throttle to assure the best cutting performance and maximum material discharge.
- Allow wet grass to dry. Wet grass will clump and collect under the mowing deck.
- Cutter should be started with tow vehicle in low gear and increased only as safe mowing conditions permit. Cutting speed should not exceed 5 MPH.
- Cutting conditions and the types of grass will vary from place to place. You may find when cutting dense areas that the pressure of the wheel tracks may cause the grass to be pushed down and not effectively mowed. If this happens you may want to mow the area twice. Once with the cutter raised and the second cutting at the desired height. The second cutting should be at a right angle from the previous for best results.
- Reducing the travel speed will help cut dense growth. This allows the blades the time necessary to make its initial cut, and regain momentum to continue cutting and discharging debris properly. The engine may stall if you are mowing too fast!
- Do not attempt to cut areas that the tow vehicle cannot maneuver through and/or slopes that you do not feel comfortable riding.

CUTTER MAINTENANCE

GENERAL RECOMMENDATIONS

The warranty on this cutter does not cover items that have been subjected to operator abuse or negligence. To receive full value from the warranty, operator must maintain unit as instructed in this manual.
Some adjustments will need to be made periodically to maintain your unit properly.

BEFORE EACH SEASON

A new spark plug and clean air filter assure proper air fuel mixture and help your engine run better and last longer.

- Replace the spark plug.
- Clean or replace the air filter.
- Check blades and belts for wear.

BEFORE EACH USE

- Check engine oil level. (Do this twice to ensure an accurate reading.)
- Check condition of air filter and clean or replace if necessary.
- Check blade operation.
- Check for loose fasteners.
- Lubricate threads of adjustment rod P/N 4006 **figure –4 page 12**

DAILY MAINTENANCE

Make sure all nuts and bolts are tight and cotter pins and retainer springs are secure. Keep blades sharp. Observe all safety precautions.

BLADE CARE AND SERVICE

For best results cutter blades must be kept sharp. The blades can be sharpened with a few strokes of a file or grinding wheel. Do Not attempt to sharpen while on the cutter.

Important: Replace blades that have been damaged or deeply nicked.

Important: Check blade and spindle hardware on a regular basis to make sure nuts are tight.



CAUTION: DO NOT HANDLE CUTTER BLADES WITH BARE HANDS. CARELESS OR IMPROPER HANDLING MAY RESULT IN SERIOUS INJURY.

GENERAL TROUBLESHOOTING

The unit is not cutting level.

- Level deck. Check air pressure of all tires; make sure they are equal. See tires for maximum inflation.
- Without the engine running, make certain blades are installed identically.

The engine will not start.

- Disengage blades, turn key switch to the “OFF” position, check battery and all other electrical connections and inspect spark plug and wire.
- Contact engine manufacturer or qualified mechanic.

Engine runs poorly.

- See engine manual.
- Check the throttle adjuster.
- Replace fuel, clean fuel filter and fuel line.
- Check spark plug and gap.

Cutter bounces excessively while towing.

- Lower tire pressure.
- Tow at a lower speed.

IF PROBLEMS PERSIST HAVE A QUALIFIED MECHANIC SERVICE THE CUTTER. NEVER ATTEMPT TO MAKE AN ADJUSTMENT THAT YOU ARE NOT SURE IS CORRECT. DOING SO CAN CAUSE OTHER PROBLEMS.



SAFETY AND OPERATIONAL DECALS

Replace decal immediately if damaged. Order by part number from
Swisher Mower and Machine Co. Inc. 1-800-222-8183,8-5 CT M-F



OD82-44 RUGGED CUT DECAL



OD39-SWISHER FLAG DECAL



OD33-5MPH DECAL



OD29-DANGER DECAL



OD36-Deflector Decal



OD55-DANGER DECAL



OD45-WARNING DECAL



OD10-ENGAGE DECAL



OD99-OFF/RUN DECAL



OD28-OFF/RUN/START DECAL



OD99112 LARGE SWISHER LOGO

FRONT SKIRT ASSEMBLY

FIGURE 1

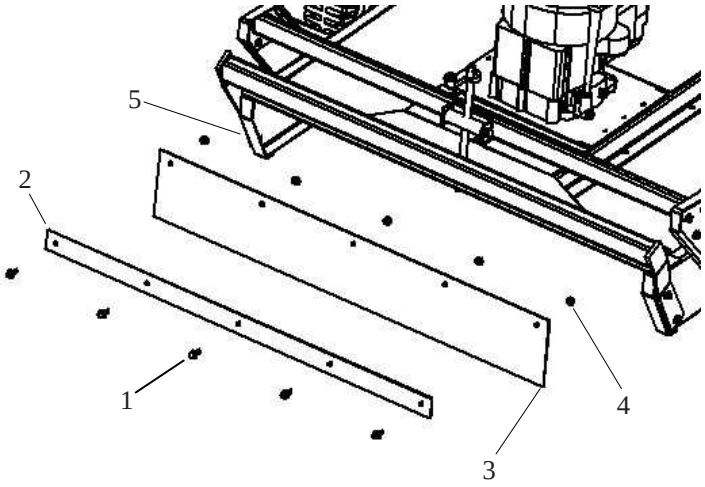

Item #	Description	Part #
1	5/16-18 X 1 HCC GR5 ZP	NB501
2	Metal Strap For Rubber Flap	4853*
3	Rubber Flapper	10384
4	5/16-18 Nylock Nut	NB181
5	Deck Weldment	10357*

HITCH BAR ASSEMBLY

FIGURE 2

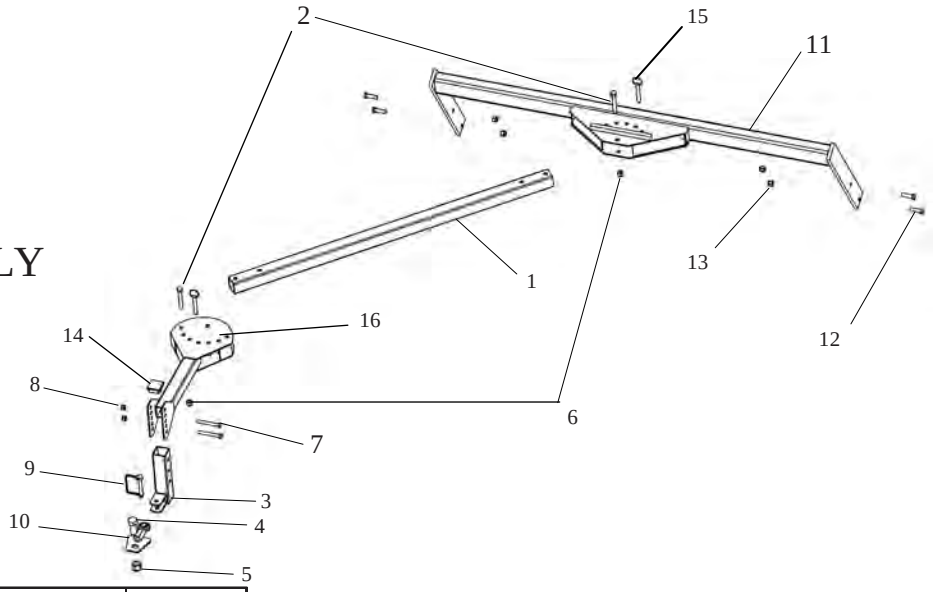

Item #	Description	Part #
1	Hitch Tube	11143*
2	3/8" -16 x 3" GR.5 BOLT	NB221
3	Extended L-Hitch	13320TK
4	5/8"-11 X 1-1/2" Bolt	NB145Z
5	5/8"-11 Nylock Nut	NB561
6	3/8"-16 Nylock Nut	NB182
7	5/16-18 X 2 1/2 HCC GR5 ZP	NB138
8	5/16-18 Nyloc Nut	NB181
9	Safety Hitch Pin	H11
10	Swivel Hitch	H10TK
11	Lift Bar Weldment	10369TK
12	3/8-16 X 1 1/4 Grade 5 Hex Bolt	NB618
13	3/8-16 Lock Nut	NB182
14	Cap	10063
15	3/8 Lock Pin	NB520
16	RT-44 Hitch Weldment	11145*

When ordering replacement parts

* = USE PAINT CODE: TC=TEX.RED,S=SILVER,TK=TEX.BLACK

FIGURE 4

Item #	Description	Part #
1	5/16-18 x 3/4 Serr Flg. Bolt	NB596
2	5/16-18 Serrated Flng Nut ZY	NB170
3	Wheel, Tire, Bearing	4834
4	Back Cover	10366*
5	Front Cover	10367*
6	Motor Base	10343*
7	Axle Bar Weldment Right	10356TK
8	Axle Bar Weldment Left	10355TK
9	Front Tube Weldment	10342TK
10	Deck Front	10368*
11	Deck Top Weldment	10353*
12	Height Adjust Rod	4006
13	Pivot Block	4007TK
14	Bolt - 1/2-13 X 1 1/4 HTC GR5 ZY	10046
15	3/4" ID X 1 1/4" OD 18 GA Washer	NB179
17	1/2"-13 Nylock Nut	NB281
18	1/2" NR Mach Bushing 14 GA	NB177
19	SPACER	10290
20	5/8"ID X 1"OD 14 GA Washer	NB149
21	1/8" x 1" Cotter Pin	NB126
22	Plastic Knob	H7K
23	Crank Rod	ES214
24	Pal Nut	NB276
25	13/16" X 1 1/4" X 1/8" Washer	NB195
26	5/16-18 x 1" Serr. Flng.Bolt	10548
27	3/4" ID x 1-1/4" OD Washer	NB179
28	.512 X 1.26 X .138 Washer	10291
29	Nut - 1/2-13; GR 5 YZ	NB213Z

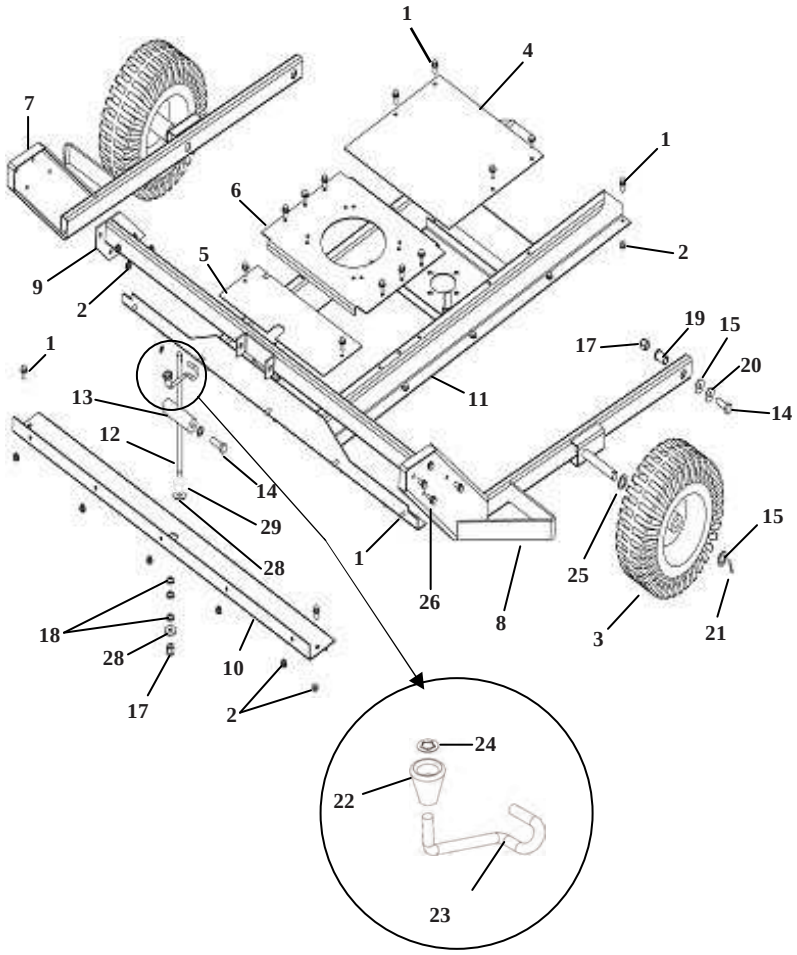

BLADE DRIVER ASSEMBLY

FIGURE 5

Item #	Description	Part #
1	Stump Jumper Weldment	4859TK
2	3/4 " Washer ZP	NB179
3	Blade	10358
4	Bolt - 3/4-10 X 2 GR8 ZY	11431
5	3/4-10 Nyloc Nut	NB609
6	1"ID X 2"OD X 14GA Bellville Washer	NB738
7	1" X 1 1/2" 10GA Washer Hardened PLN	NB614HT
8	Blade Bearing	4845
9	Tube Spacer	4049
10	Blade Driver	4858TK
11	1/2"-13 X 2" HCC GR5 ZP	NB509
12	1/2"-13 Nylock Nut	NB281
13	Spacer	BB105SL
14	Blade Pulley- 10.3125"	4846
15	1"-8 X 7 1/2" GR8 ZP	NB601
16	1"-8 Nylock Nut ZP	NB612
17	Blade Driver Complete	4872
18	1/2 Flat washer	NB555

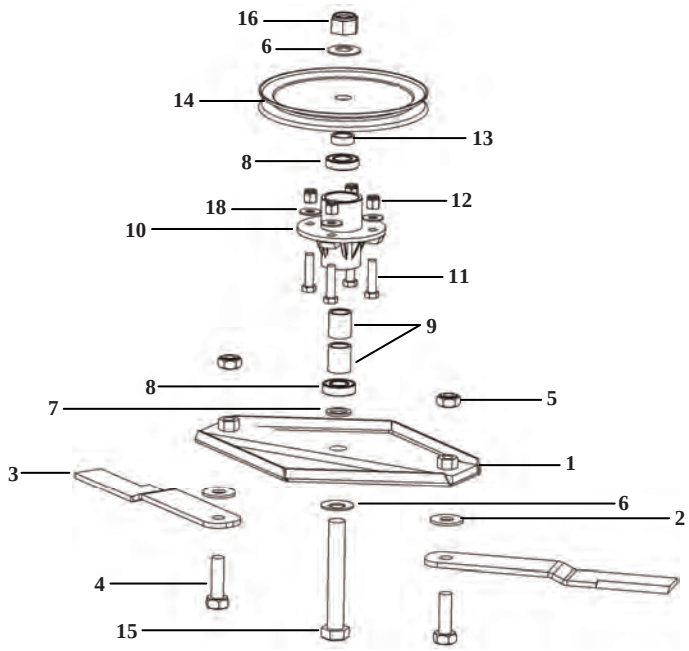

When ordering replacement parts
* = USE PAINT CODE:
TC=TEX.RED,S=SILVER,TK=TEX.BLACK

ENGINE PULLEY ASSEMBLY

FIGURE 6

1	Engine B&S	N/A
2	5/16-18 Serrated Flange Nut	NB170
3	5/16"-18 X 1 1/4" Serrated Flange Bolt	NB253
4	5/16" USS Flat Washer ZP	NB556
5	RT44 Belt Guide	4867
6	Spacer For Engine Pulley	BB105S
7	Bolt - Serr Flange, 5/16-18X2 1/4 GR5 ZY	NB622
8	Engine Pulley- 4.25"OD,1 1/4" ID	BB105
9	1/4" X 1" Key Stock	9031
10	Spacer Lower For Engine Pulley	BB105SL
11	Washer	TR150W
12	Washer Belleville Engine Pulley	699
13	7/16"-20 X 1 HCF GR5 ZP	NB452N
14	Oil Drain Valve	16000
15	Oil Drain Cap	AS123
16	5/16-18 Nyloc Nut	NB181

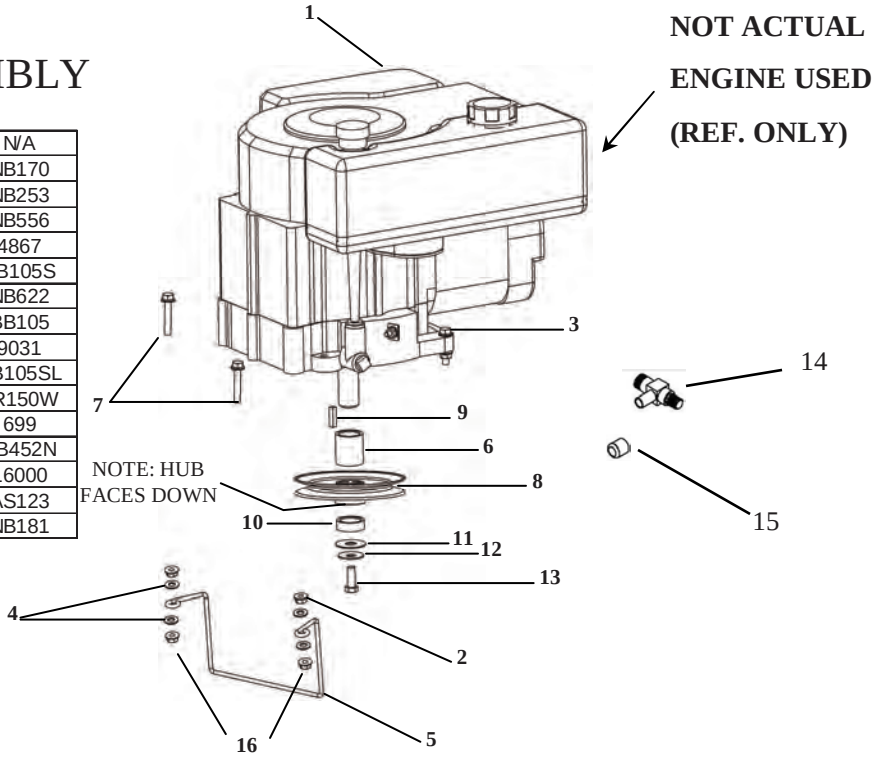

BELT ENGAGE CONFIGURATION

FIGURE 7

Item #	Description	Part #
1	1/2"-13 X 2 1/2" HCC GR5 ZP	NB510
2	Idler Arm	6681TK
3	1/2"-13 2-Way Jam Lock Nut	NB121
4	1/4"-20 Nylok Nut	NB180
5	1/4"-20 X 3/4" GR5 ZP	NB250
6	Clutch Cable Clevis	9023mod
7	Belt Engage Arm	4898TK
8	1/4"-20 X 1" HCC GR5 ZP	NB102
9	1/4" SAE Washer	NB274
10	5/64" X 3/4"Cotter Pin	NB519
11	5/16"-18 Nyloc Nut	NB181
12	Spacer	B99S
13	3/8" Hardened Washer	NB196
14	5/16"-18 X 1" HCC GR5 ZP	NB501
15	3/8-16 Nyloc Nut	NB182
16	Washer Belleville	699
17	Brake Arm Assembly	4893
20	1/2" X 1-9/16" Shoulder Bolt	NB220
21	Torsion Brake Spring	9040
22	Brake Rod	4891TK
23	1/4"-20 HX Nut ZP	NB139
24	Clutch Rod Spring	682S
25	3/8"-16 X 2 1/2" HTC GR5 ZP	NB619
26	3/8"-16 HNC GR2 ZP	NB212
27	Idler Pulley OD-3.25", ID-3/8"	B527
28	3/8" SAE Washer	NB272
29	3/8"-16 Nyloc Nut	NB182

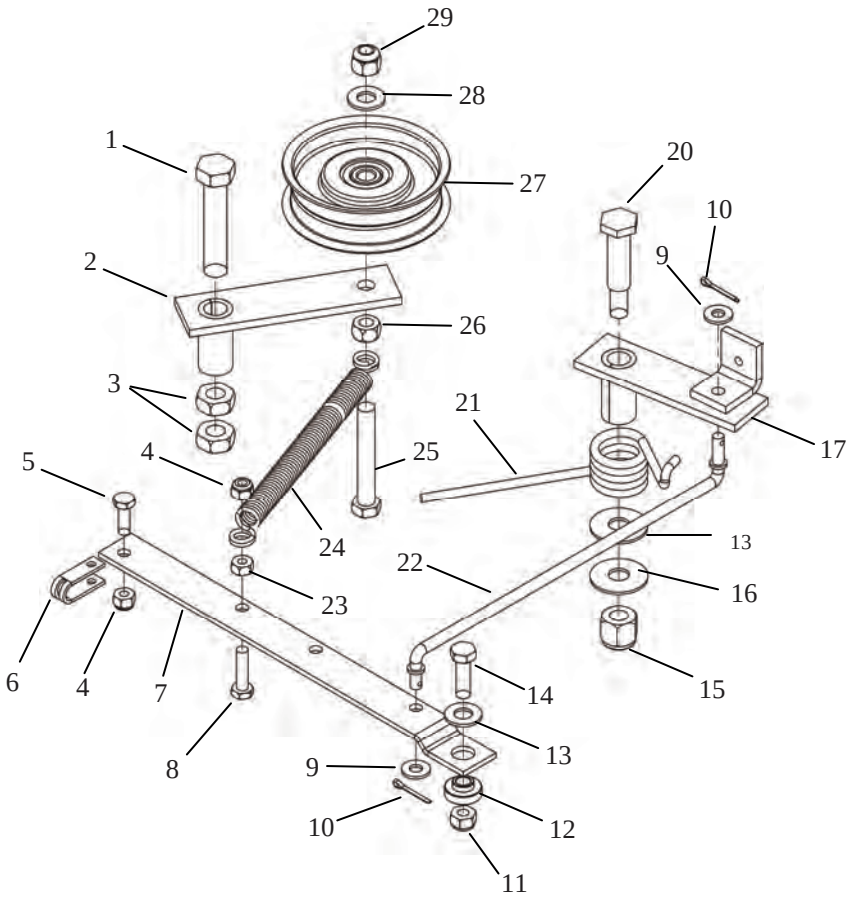

When ordering replacement parts

* = USE PAINT CODE:

TC=TEX.RED,S=SILVER,TK=TEX.BLACK

CONSOLE ASSEMBLY

FIGURE 8

Item #	Description	Part #
1	T Handle for Console	4463TK
2	1/4-20 Nylok Nut	NB180
3	5/16-18 Nyloc Nut	NB181
4	5/16-18 X 1 1/2 Torx Pan ZP	NB591
5	Console Weldment	4575TK
6	Key Switch Lock Washer	9088
7	Key Switch Nut	9087
8	Key Switch ON-OFF, 2 Prong	KSM
	Key Switch (12-VOLT)	3623
	Keys	KSK
9	Bolt - HTC 1/4-20 X 2 1/2 GR5 ZY	NB163
10	1/4 SAE Washer	NB274
11	Console Mount Plate	4852TK
12	1/4-20 Wing Nut ZP	NB608
13	1/4 X 1 1/2 Clevis Pin	NB518
14	1/4-20 X 1 1/4 HCC GR5 ZP	NB560
15	Clutch Cable Clevis	9023MOD
16	Link for Console	4461TK
17	Pin - Cotter, 5/64 X 3/4 ZY	NB519
18	**Wiring Harness B&S (RTB115441, RTB12544, POLB10544HD)**	10385
	Wiring Harness B&S (RTB134412V) console	WHRT44-1
	Wiring Harness B&S (RTB134412V) engine	11764
	Wiring Harness B&S (RTB14544)	10299
19	Engage Cable	BR20CC

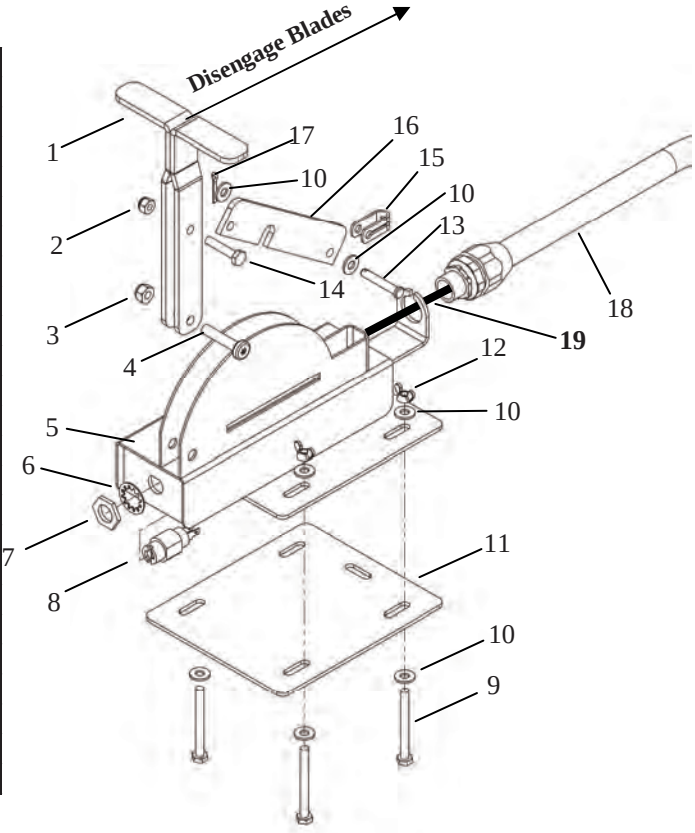

ENGINE TO BLADE PULLEY CONFIGURATION

FIGURE 9

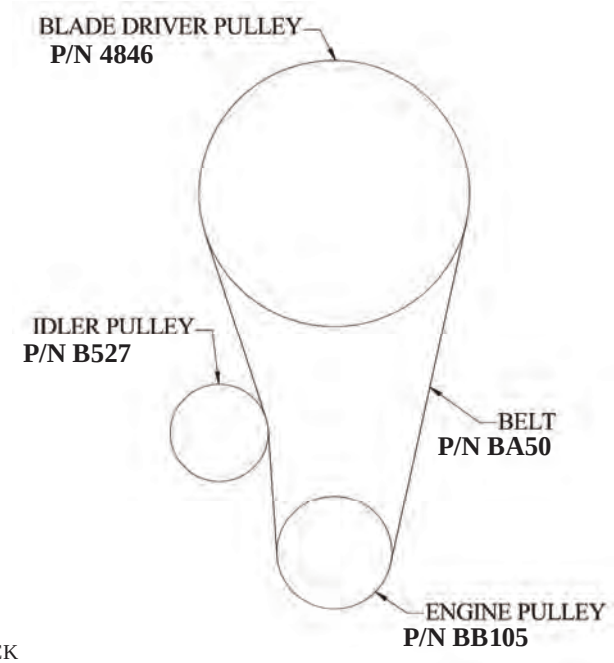

When ordering replacement parts
* = USE PAINT CODE:
TC=TEX.RED,S=SILVER,TK=TEX.BLACK

WIRING DIAGRAM (RTB115441, RTB12544, POLB10544HD)

FIGURE 10

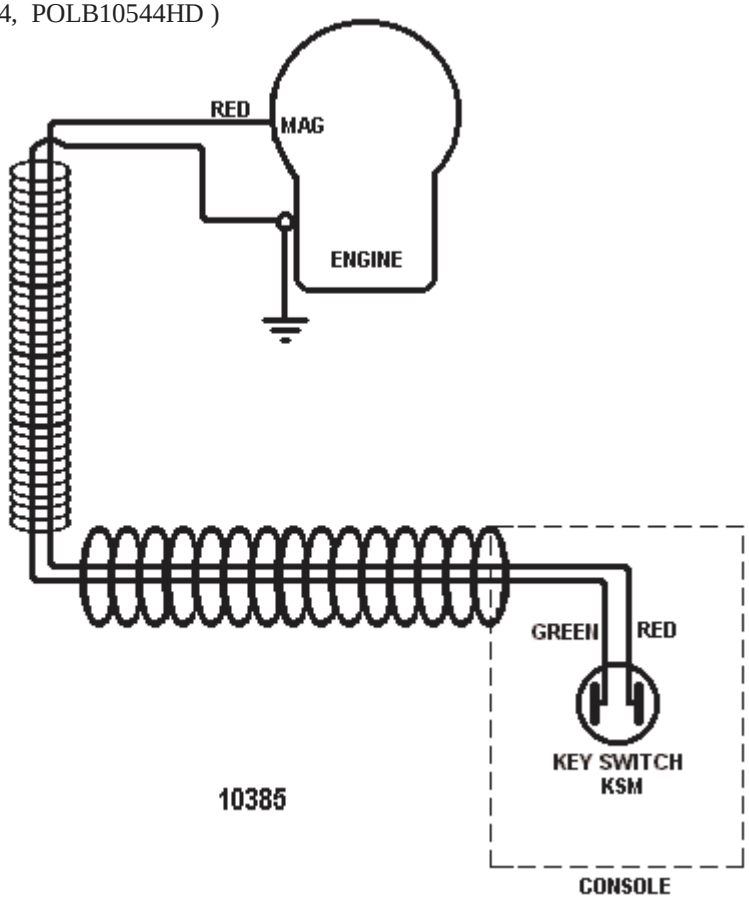

WIRING DIAGRAM (RTB134412V)

FIGURE 11

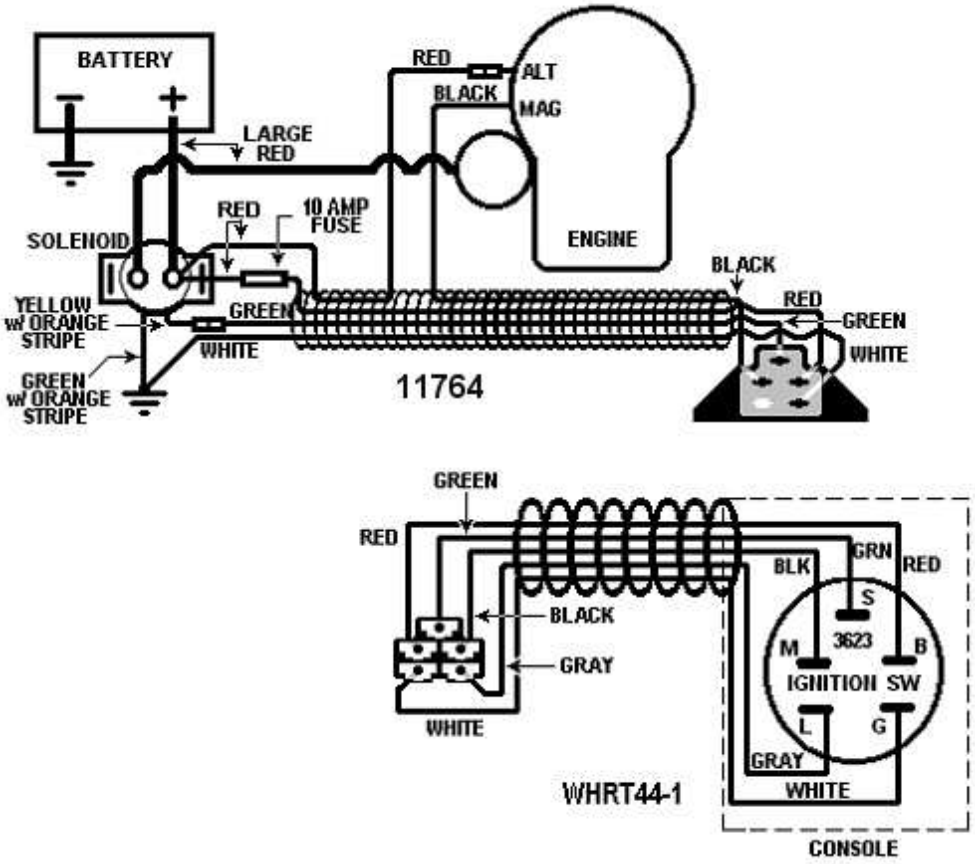

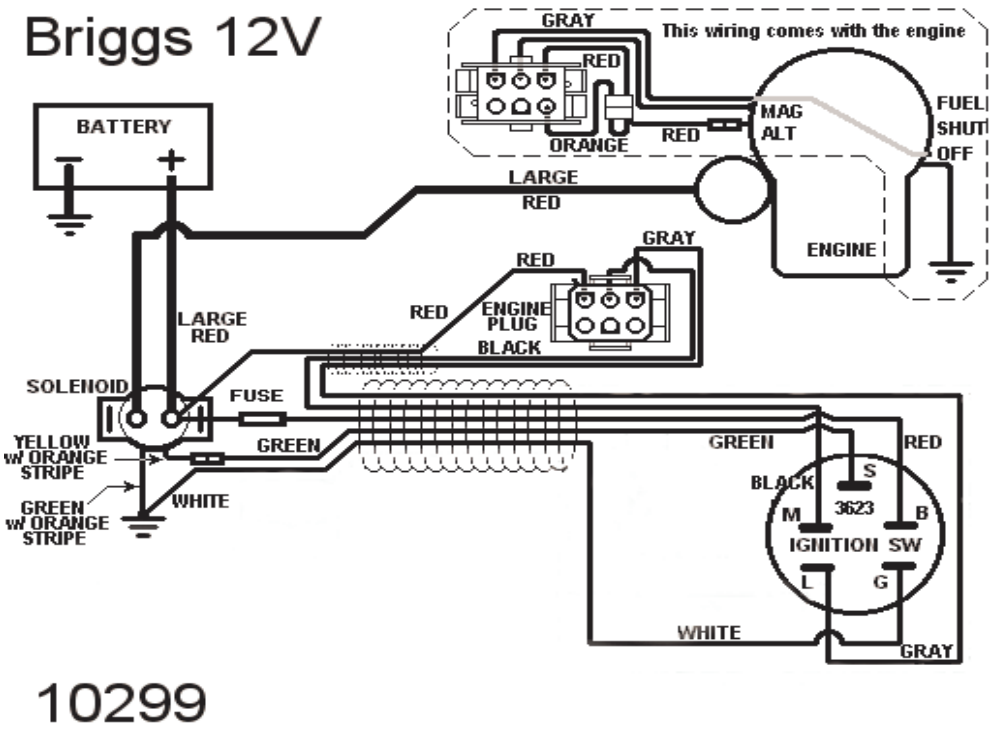
Briggs 12V
GRAY
This wiring comes with the engine
RED
BATTERY
MAG
ALT
FUEL
SHUT
OFF
ORANGE
RED
LARGE
RED
ENGINE
GRAY
RED
RED
ENGINE
PLUG
BLACK
LARGE
RED
SOLENOID
FUSE
YELLOW
w/ ORANGE
STRIPE
GREEN
GREEN
RED
BLACK
S
M
3623
B
IGNITION SW
L
G
GREEN
w/ ORANGE
STRIPE
WHITE
WHITE
GRAY
10299

Notes

REPAIR PARTS

Your 44'' Trailcutter has been produced with components designed specific to this machine. Although standard V-belts, springs, bearings, blades, pulleys, hardware, etc. look similar to parts used on other machinery, they may in some cases be made of a different construction and/or materials.

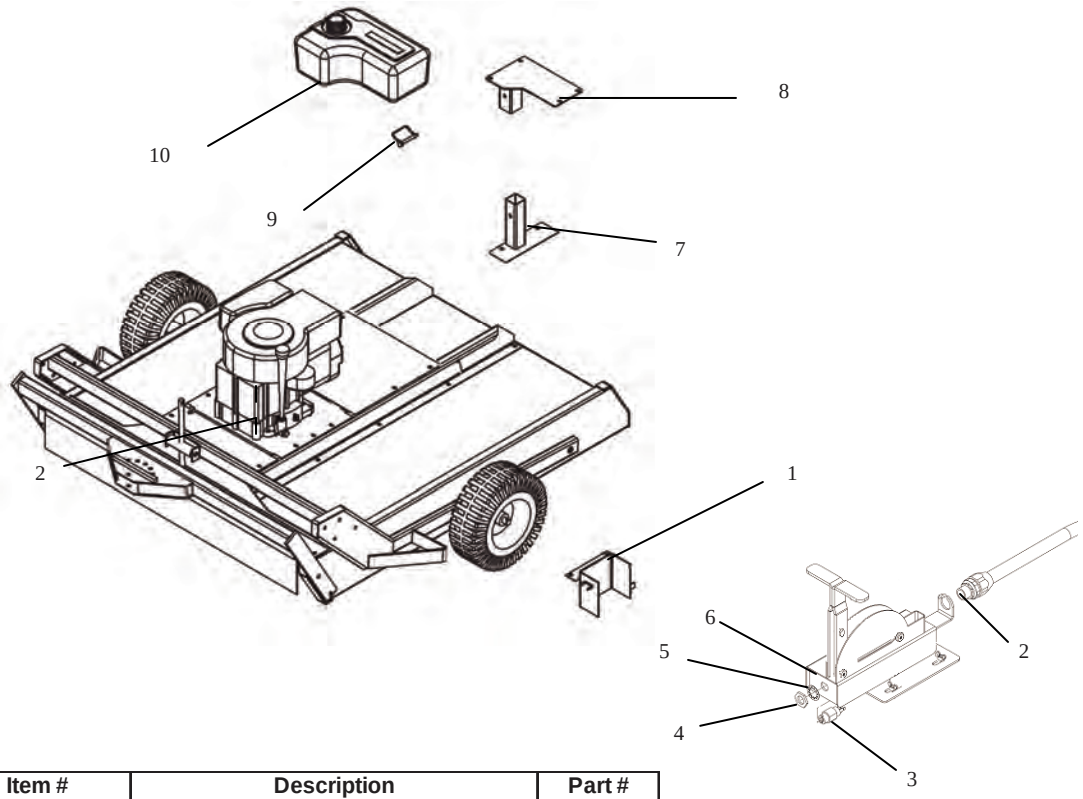

Item #	Description	Part #
1	Battery Box	10298TK
2	12 volt Wiring Harness (RTB1454412V)	10299
3	Key Switch	3623
4	Key Switch Nut	9087
5	Key Switch Lock Washer	9088
6	Decal On / Off	OD28
7	Tank Mount Weldment	10763TK
8	Gas Tank Mount	6078TK
9	Lock Pin	H11
10	Gas Tank Assembly	6059
Not Shown	12 volt Wiring Harness (Engine)	10299
Not Shown	Nut - 1/4"-20 Nyloc	NB180
Not Shown	Solenoid Assembly 12 Volt	1002004
Not Shown	Battery Hold Down, 15" Tarp Strap	BHOLD
Not Shown	Battery Cable (Black 10")	BCS
Not Shown	Battery Cable (10" Red)	BCSR
Not Shown	Battery Cable Small Rubber Boot	BCBT
Not Shown	Battery Pad	BATPAD
Sold Separately	Battery (U1R)	N/A

When ordering replacement parts

* = USE PAINT CODE: TC=TEX.RED,S=SILVER,TK=TEX.BLACK

YOUR WARRANTY RIGHTS AND OBLIGATIONS: The California Air Resources Board and Swisher Mower, is pleased to explain the evaporative emission control system (EECS) on your model year 2006 and later Swisher Product. In California, new Outdoor Power Equipment, must be designed, built and equipped to meet the State's stringent anti-smog standards. Swisher Mower must warrant the EECS on your Power Equipment, for the period of time listed below provided there has been no abuse, neglect, or improper maintenance. For model year 2006 the EECS on your mower includes the liquid fuel lines, fuel line connectors, and fuel line clamps. Where a warrantable condition exists, Swisher Mower will repair at no cost to you. Expenses covered under warranty include diagnosis, parts, and labor.

MANUFACTURER'S WARRANTY COVERAGE: For a period of two years, any evaporative emission-related part included in the list of EECS parts for your mower is defective, the part will be repaired or replaced by Swisher Mower.

OWNER'S WARRANTY RESPONSIBILITIES: As the owner of this Power Equipment, you are responsible for performance of the required maintenance listed in your owner's manual. Swisher Mower recommends that you retain all receipts covering maintenance on your Power Equipment, but Swisher Mower cannot deny warranty solely for the lack of receipts. As the Power Equipment owner, you should be aware that Swisher Mower, may deny you warranty coverage if your Power Equipment, or a covered part has failed due to abuse, neglect, or improper maintenance, unapproved modifications, or the use of parts not made or approved by the equipment manufacturer. You are responsible for presenting your Power Equipment to an authorized Swisher Service center as soon as the problem exists. Warranty repairs should be completed in a reasonable amount of time, not to exceed 30 days. If you have a question regarding your warranty rights and responsibilities, you should contact the Swisher Mower Service representative at 1-800-222-8183.

WARRANTY COMMENCEMENT DATE: The warranty period begins on the date the Power Equipment Is purchased.

LENGTH OF COVERAGE: This warranty shall be for a period of two (2) years from the initial date of purchase.

WHAT IS COVERED: Warranted parts include the Liquid fuel line, fuel line connectors, and fuel line clamps.

REPAIR OR REPLACEMENT OF PARTS: Repair or replacement of any evaporative warranted part will be performed at no charge to the owner at an authorized Swisher Mower Service Center. If you have a question regarding your warranty rights and responsibilities, you should contact your nearest authorized service center or call the Swisher Mower Service representative at 1-800-222-8183.

WARRANTY PERIOD: Any warranted part is not scheduled for replacement as required maintenance, or which is scheduled only for regular inspection to the effect of "repair or replace as necessary" shall be warranted for two (2) years. Any warranted part that is scheduled for replacement as required maintenance shall be warranted for the period of time up to the first scheduled replacement point for that part.

DIAGNOSIS: The owner shall not be charged for diagnostic labor that leads to the determination that a warranted part is defective if the diagnostic work is performed at an authorized Swisher Service Center.

CONSEQUENTIAL DAMAGE: Swisher Mower, may be liable for damages to other engine or equipment components caused by the failure of a warranted part still under warranty.

WHAT IS NOT COVERED: All failures caused by abuse, neglect, or improper maintenance is not covered.

ADD-ON OR MODIFIED PARTS: The use of add-on or modified parts may be grounds for disallowing a warranty claim. Swisher Mower is not liable to cover failures of warranted parts caused by the use of an add-on or modified part.

HOW TO FILE A CLAIM: If you have a question regarding your warranty rights and responsibilities, you should contact your nearest authorized service center or call Swisher Mower Service representative at 1-800-222-8183.

Maintenance Log

Date Oil Changed	Date Changed Belts	Date Blades Sharpen or Changed	Notes

swisherinc.com

OWNER'S MANUAL

MODEL NO.

STARTING SERIAL #:
L108-043001

RTB115441
RTB12544
RTB12544-CA
RTB134412V
RTB14544
RTB14544-CA
POLB10544HD
POL12544X
POL14544X
POL14544X-CA
POL12544X-CA

44"ROUGH CUT TRAILCUTTER

Each mower has its own model number. Each engine has its own model number. The model number for the mower will be found on the right hand side of the motor mount. The model number for the engine will be found on the top of the valve cover.
All mower parts listed herein may be ordered directly from Swisher Mower & Machine Co. Inc. or your nearest Swisher dealer.
All engine parts may be ordered from the nearest dealer of the engine supplied with your mower.

WHEN ORDERING PARTS, PLEASE HAVE THE FOLLOWING INFORMATION AVAILABLE:

* PRODUCT – 44'' TRAILCUTTER
* SERIAL NUMBER - _____
* MODEL NUMBER - _____
* ENGINE MODEL NUMBER - _____
  TYPE - _____
* PART NUMBER
* PART DESCRIPTION

TELEPHONE - 1-800-222-8183
FAX - 1-660-747-8650

SWISHER MOWER & MACHINE CO., INC.
1602 CORPORATE DRIVE; P.O. BOX 67
WARRENSBURG, MO 64093
www.swisherinc.com

SWISHER MOWER & MACHINE CO.,INC.

PRINTED IN U.S.A.