MEGAWIN
MAKE YOU WIN

8051-Based MCU

MG82FG5Cxx
Data Sheet

Version: 0.24

This document contains information on a new product under development by Megawin. Megawin reserves the right to change or discontinue this product without notice.
© Megawin Technology Co., Ltd. 2005 All rights reserved.

Features

- 1-T 80C51 Central Processing Unit
- **MG82FG5C64 / MG82FG5C32** with **64K / 32K** Bytes flash ROM
  - ISP memory zone could be optioned as **0.5KB/1.0KB~7.5KB**
  - Flexible IAP size by software configured
  - Code protection for flash memory access
  - Flash write/erase cycle: 10,000
  - Flash data retention: 100 years at 25°C
  - **Default MG82FG5C64 Flash space mapping**
    - AP Flash default mapping (60KB, 0000h~EFFFh)
    - IAP Flash default mapping (2.5KB, F000h~F9FFh)
    - ISP Flash default mapping (1.5KB, FA00h~FFFFh), ISP Boot code
  - **Default MG82FG5C32 Flash space mapping**
    - AP Flash default mapping (29.5KB, 0000h~75FFh)
    - IAP Flash default mapping (1KB, 7600h~79FFh)
    - ISP Flash default mapping (1.5KB, 7A00h~7FFFh), ISP Boot code
- Data RAM: **4K / 2K** Bytes
  - On-chip 256 bytes scratch-pad RAM
  - **3840 / 1792** bytes expanded RAM (XRAM)
- Dual data pointer
- Variable length MOVX for slow SRAM/Peripherals
  - Support 16-bit data read/write on MOVX cycle
  - No Address mode access (FIFO mode)
- Interrupt controller
  - **24** sources, four-level-priority interrupt capability
  - Four external interrupt inputs, nINT0, nINT1, nINT2 and nINT3, with glitch filter
  - All external interrupts support High/Low level or Rising/Falling edge trigger
- Total 12 timers in MG82FG5C64
  - RTC Timer and WDT Timer
  - Timer 0, Timer 1, Timer 2, Timer 3 and Timer 4
  - S1BRG, S2BRG and S3BRG
  - PCA0 and PCA1
  - If Timer 2/3/4 in split mode, total 15 timers
- Five 16-bit timer/counters, Timer 0, Timer 1, Timer 2, Timer 3 and Timer 4
  - X12 mode and timer clock output function
  - Synchronous Run-Enable on all timer (same function on Stop and Reload)
  - New 4 operating modes in Timer 2/3/4 with 8 clock sources and 8 capture sources
  - Timer 2/3/4 can be split to two 8-bit timers
  - Clock Count Output (CCO) on T2CKO, T3CKO and T4CKO
  - S1/S2/S3BRG cascaded with Timer 1 to a 32/40-bit timer/counter
- Two Programmable 16-bit counter/timer Arrays (PCA0 and PCA1) with 12 CCP modules
  - Each PCA has 6 CCP (Capture/Compare/PWM) modules
  - Reloadable 16-bit base counter to support variable length PWM
  - Up to 100MHz clock source from on-chip CKM
  - Capture mode, 16-bit software timer mode and High speed output mode
  - Buffered capture mode to monitor narrow pulse input
  - Variable 8/10/12/16-bit PWM mode with phase shift function, each PCA can be configured to:
    - Up to 6 channels un-buffered 16-bit PWM, or
    - Up to 6 channels buffered 8-bit PWM, or
    - Up to 3 channels buffered 16-bit PWM

  - PCA0 PWM module with dead-time control, Break control and central-aligned option
- Keypad Interrupt (P0/P2/P5/P3+P4)
- 10-Bit Single-ended ADC
  - Programmable throughput up to 500K sps
  - 16 channel external inputs
  - ADC VREF+ from external input
- Analog Comparator 0
  - Programmable on-chip voltage reference, shared to analog comparator 1/2
  - 4 selectable AIN0(+) inputs
  - Wake-up from power-down and idle
  - Glitch filter option and output to internal timer capture
- Analog Comparator 1/2
  - Wake-up from power-down and idle
  - Glitch filter option and output to internal timer capture
- Enhanced UART (S0)
  - Framing Error Detection
  - Automatic Address Recognition
  - Speed improvement mechanism (X2/X4 mode), Max. UART baud rate up to 7.3728/12.0MHz
  - Support SPI Master in Mode 4, up to 12MHz on SPICLK
- 2nd/3rd/4th UARTs (S1/S2/S3)
  - Each UART has dedicated Baud Rate Generator
  - S1 shares baud rate generator to S0
  - 8-bit timer function on each module, cascaded with Timer 1 to be a 32/40-bit timer/counter
  - Max. UART baud rate up to 1.8432/3.0MHz
  - Support SPI master mode in Mode 4, up to 12MHz on SPICLK
  - S1 support LIN bus protocol in Mode 5
  - S1/S2/S3 support SCI (Smart Card Interface, ISO-7816) in Mode 7
- One Master/Slave SPI serial interface
  - Max. 12MHz on SPICLK
  - Quad Peripheral Interface (QPI) available
  - 8/16 bits data transfer
  - Up to 5 SPI masters including S0~S3 in mode 4
- Three Master/Slave two wire serial interfaces: TWSI, TWI1 and STWI (SID)
  - Two Master/Slave hardware engine: TWSI and TWI1
  - 3 device addresses recognized in TWSI/TWI1 slave mode
  - Two wire Start/Stop serial interface detection (SID) for STWI, Software TWI
- Programmable Watchdog Timer (WDT), clock sourced from ILRCO
  - One time enabled by CPU or power-on
  - Interrupt CPU or Reset CPU on WDT overflow
  - Support WDT function in power down mode (watch mode) for auto-wakeup function
- Real-Time-Clock (RTC) module, clock sourced from XTAL or ILRCO
  - Programmable interrupt period from mini-second wakeup to monthly wakeup
  - 21-bit length system timer
- Beeper function
- On-Chip-Debug interface (OCD)
- Maximum **59** GPIOs in LQFP64 package
  - P3 can be configured to quasi-bidirectional, push-pull output, open-drain output and input only
  - P0, P1, P2, P4, P5, P6 and P7 can be configured to open-drain output or push-pull output
  - P6.0, P6.1 and P4.7 shared with XTAL2, XTAL1 and RST
- Clock Sources
  - Internal 12MHz/11.059MHz oscillator (IHRCO): factory calibrated to ±1%, typical
  - External crystal mode, support 32.768KHz oscillating
  - Internal Low power 32KHz RC Oscillator (ILRCO)

  - External clock input (ECKI) on P6.0/XTAL2, up to 25MHz
  - Internal RC Oscillator output on P6.0/XTAL2
  - On-chip Clock Multiplier (CKM) to provide high speed clock source
- Two Brown-Out Detectors
  - BOD0: detect 1.7V
  - BOD1: selected detection level on 4.2V/3.7V/2.4V/2.0V
  - Interrupt CPU or reset CPU
  - Wake up CPU in Power-Down mode (BOD1)
- Multiple power control modes: idle mode, power-down mode, slow mode, sub-clock mode, RTC mode, watch mode and monitor mode.
  - All interrupts can wake up IDLE mode
  - 13 sources to wake up Power-Down mode
  - Slow mode and sub-clock mode support low speed MCU operation
  - RTC mode supports RTC to resume CPU in power down
  - Watch mode supports WDT to resume CPU in power down
  - Monitor mode supports BOD1 to resume CPU in power down
- Operating voltage range: 1.8V – 5.5V
  - Minimum 1.8V requirement in flash write operation (ISP/IAP/ICP)
- Operation frequency range: 25MHz(max)
  - External crystal mode, 0 – 12MHz @ 2.0V – 5.5V, 0 – 25MHz @ 2.7V – 5.5V
  - CPU up to 12MHz @ 1.8V – 5.5V, and up to 25MHz @ 2.2V – 5.5V
- Operating Temperature:
  - Industrial (-40°C to +85°C)*
- Package Types:
  - LQFP64 (7mm x 7mm): MG82FG5C64AD64
  - LQFP48 (7mm x 7mm): MG82FG5C32AD48

*: Tested by sampling.

Content

Features 3
Content 6
1. General Description 11
2. Block Diagram 12
3. Special Function Register 13
   3.1. SFR Map (Page 0~F) 13
   3.2. SFR Bit Assignment (Page 0~F) 14
   3.3. Auxiliary SFR Map (Page P) 18
   3.4. Auxiliary SFR Bit Assignment (Page P) 19
4. Pin Configurations 20
   4.1. Package Instruction 20
   4.2. Pin Description 22
   4.3. Alternate Function Redirection 25
5. 8051 CPU Function Description 30
   5.1. CPU Register 30
   5.2. CPU Timing 31
   5.3. CPU Addressing Mode 32
6. Memory Organization 33
   6.1. On-Chip Program Flash 33
   6.2. On-Chip Data RAM 34
   6.3. On-chip expanded RAM (XRAM) 37
   6.4. Off-Chip External Data Memory access 38
      6.4.1. Multiplexed 8-bit Address Mode for MOVX 8-bit Data Access 40
      6.4.2. Multiplexed 8-bit Address Mode for MOVX 16-bit Data Access 41
      6.4.3. Multiplexed 16-bit Address Mode for MOVX 8-bit Data Access 42
      6.4.4. Multiplexed 16-bit Address Mode for MOVX 16-bit Data Access 43
      6.4.5. No Address Multiplexed Mode for MOVX 8-bit Data Access 44
      6.4.6. No Address Multiplexed Mode for MOVX 16-bit Data Access 45
      6.4.7. ADDRO Mode for MOVX 16-bit address Access 45
      6.4.8. ADDRO Mode for MOVX 16-bit address Access 45
   6.5. Declaration Identifiers in a C51-Compiler 46
7. Dual Data Pointer Register (DPTR) 47
8. System Clock 48
   8.1. Clock Structure 49
   8.2. Clock Register 50
9. Watch Dog Timer (WDT) 53
   9.1. WDT Structure 53
   9.2. WDT During Idle and Power Down 53
   9.3. WDT Register 54
   9.4. WDT Hardware Option 55
10. Real-Time-Clock(RTC)/System-Timer 57
   10.1. RTC Structure 57
   10.2. RTC Register 58
11. System Reset 60
   11.1. Reset Source 60
   11.2. Power-On Reset 60
   11.3. External Reset 61
   11.4. Software Reset 61
   11.5. Brown-Out Reset 61
   11.6. WDT Reset 62
   11.7. Illegal Address Reset 62

12. Power Management 63
12.1. Brown-Out Detector 63
12.2. Power Saving Mode 64
12.2.1. Slow Mode 64
12.2.2. Sub-Clock Mode 64
12.2.3. RTC Mode 64
12.2.4. Watch Mode 64
12.2.5. Monitor Mode 64
12.2.6. Idle Mode 64
12.2.7. Power-down Mode 64
12.2.8. Interrupt Recovery from Power-down 67
12.2.9. Reset Recovery from Power-down 67
12.2.10. KBI wakeup Recovery from Power-down 67
12.3. Power Control Register 68
13. Configurable I/O Ports 70
13.1. IO Structure 70
13.1.1. Port 3 Quasi-Bidirectional IO Structure 71
13.1.2. Port 3 Push-Pull Output Structure 72
13.1.3. Port 3 Input-Only (High Impedance Input) Structure 72
13.1.4. Port 3 Open-Drain Output Structure 73
13.1.5. General Open-Drain Output Structure 73
13.1.6. General Push-Pull Output Structure 74
13.1.7. General Port Digital Input Configured 74
13.2. I/O Port Register 75
13.2.1. Port 0 Register 75
13.2.2. Port 1 Register 75
13.2.3. Port 2 Register 76
13.2.4. Port 3 Register 76
13.2.5. Port 4 Register 77
13.2.6. Port 5 Register 77
13.2.7. Port 6 Register 77
13.2.8. Port 7 Register 78
13.2.9. Pull-Up Control Register 78
13.2.10. Analog Input Configuration Register 79
13.2.11. Port Output Driving Strength Control Register 80
14. Interrupt 83
14.1. Interrupt Structure 83
14.2. Interrupt Source 85
14.3. Interrupt Enable 88
14.4. Interrupt Priority 89
14.5. Interrupt Process 89
14.6. nINTx Input Source Selection and Input Filter (x=0~3) 90
14.7. Interrupt Register 91
15. Timers/Counters 100
15.1. Timer 0 and Timer 1 101
15.1.1. Timer 0/1 Mode 0 101
15.1.2. Timer 0/1 Mode 1 103
15.1.3. Timer 0/1 Mode 2 104
15.1.4. Timer 0/1 Mode 3 105
15.1.5. Timer 0/1 Programmable Clock-Out 106
15.1.6. Timer 0/1 Register 108
15.2. Timer 2 112
15.2.1. Timer 2 Mode 0 (Auto-Reload and External Interrupt) 112
15.2.2. Timer 2 Mode 1 (Auto-Reload with External Interrupt) 113
15.2.3. Timer 2 Mode 2 (Capture) 114
15.2.4. Timer 2 Mode 3 (Capture with Auto-Zero) 115
15.2.5. Split Timer 2 Mode 0 (AR and Ex. INT) 116
15.2.6. Split Timer 2 Mode 1 (AR with Ex. INT) 117
15.2.7. Split Timer 2 Mode 2 (Capture) 118

15.2.8. Split Timer 2 Mode 3 (Capture with Auto-Zero) 119
15.2.9. Baud-Rate Generator Mode (BRG) 120
15.2.10. Timer 2 Programmable Clock Output 122
15.2.11. Timer 2 Register 123
15.3. Timer 3 127
15.3.1. Timer 3 Mode 0 (Auto-Reload and External Interrupt) 127
15.3.2. Timer 3 Mode 1 (Auto-Reload with External Interrupt) 128
15.3.3. Timer 3 Mode 2 (Capture) 129
15.3.4. Timer 3 Mode 3 (Capture and Auto-Zero) 130
15.3.5. Split Timer 3 Mode 0 (Auto-Reload and External Interrupt) 131
15.3.6. Split Timer 3 Mode 1 (Auto-Reload with External Interrupt) 132
15.3.7. Split Timer 3 Mode 2 (Capture) 133
15.3.8. Split Timer 3 Mode 3 (Capture with Auto-Zero) 134
15.3.9. Timer 3 Register 135
15.4. Timer 4 139
15.4.1. Timer 4 Mode 0 (Auto-Reload and External Interrupt) 139
15.4.2. Timer 4 Mode 1 (Auto-Reload with External Interrupt) 140
15.4.3. Timer 4 Mode 2 (Capture) 141
15.4.4. Timer 4 Mode 3 (Capture and Auto-Zero) 142
15.4.5. Split Timer 4 Mode 0 (Auto-Reload and External Interrupt) 143
15.4.6. Split Timer 4 Mode 1 (Auto-Reload with External Interrupt) 144
15.4.7. Split Timer 4 Mode 2 (Capture) 145
15.4.8. Split Timer 4 Mode 3 (Capture with Auto-Zero) 146
15.4.9. Timer 4 Register 147
16. Programmable Counter Array (PCA0) 151
16.1. PCA Overview 151
16.2. PCA Timer/Counter 152
16.3. Compare/Capture Modules 156
16.4. Operation Modes of the PCA 158
16.4.1. Capture Mode 158
16.4.2. 16-bit Software Timer Mode 160
16.4.3. High Speed Output Mode 161
16.4.4. PWM Mode 162
16.4.5. Enhance PWM Mode 163
17. Programmable Counter Array 1 (PCA1) 166
17.1. PCA1 Register 168
18. Serial Port 0 (UART0) 170
18.1. Serial Port 0 Mode 0 171
18.2. Serial Port 0 Mode 1 173
18.3. Serial Port 0 Mode 2 and Mode 3 174
18.4. Frame Error Detection 174
18.5. Multiprocessor Communications 175
18.6. Automatic Address Recognition 175
18.7. Baud Rate Setting 177
18.7.1. Baud Rate in Mode 0 177
18.7.2. Baud Rate in Mode 2 177
18.7.3. Baud Rate in Mode 1 & 3 177
18.8. Serial Port 0 Mode 4 (SPI Master) 184
18.9. Serial Port 0 Register 186
19. Serial Port 1 (UART1) 189
19.1. Serial Port 1 Baud Rate Generator (S1BRG) 189
19.2. Serial Port 1 Baud Rate Setting 190
19.2.1. Baud Rate in Mode 0 190
19.2.2. Baud Rate in Mode 2 190
19.2.3. Baud Rate in Mode 1 & 3 190
19.3. Serial Port 1 Mode 4 (SPI Master) 192
19.4. Pure Timer Mode for S1BRG 194
19.5. S1BRT Programmable Clock Output 195

19.6. S1 Baud Rate Generator for S0 196
19.7. Serial Port 1 Register 197
20. Serial Port 2 (UART2) 200
20.1. Pure Timer Mode for S2BRG 200
20.2. Serial Port 2 Register 201
21. Serial Port 3 (UART3) 204
21.1. Pure Timer Mode for S3BRG 204
21.2. Serial Port 3 Register 205
22. Serial Peripheral Interface (SPI) 208
22.1. Typical SPI Configurations 208
22.1.1. Single Master & Single Slave 208
22.1.2. Dual Device, where either can be a Master or a Slave 209
22.1.3. Single Master & Multiple Slaves 209
22.2. Configuring the SPI 210
22.2.1. Additional Considerations for a Slave 210
22.2.2. Additional Considerations for a Master 210
22.2.3. Mode Change on nSS-pin (corrupt master transaction…) 211
22.2.4. Transmit Holding Register Full Flag 211
22.2.5. Write Collision 211
22.2.6. SPI Busy Flag 211
22.2.7. SPI Clock Rate Select 211
22.3. Data Mode 213
22.4. SPI Register 215
23. Two Wire Serial Interface (TWSI and TWI1) 218
23.1. Operating Modes 219
23.1.1. Master Transmitter Mode 219
23.1.2. Master Receiver Mode 219
23.1.3. Slave Transmitter Mode 220
23.1.4. Slave Receiver Mode 220
23.2. Miscellaneous States 221
23.3. Using the TWSI 221
23.4. TWSI Register 227
23.5. TWI1 Register 230
24. Serial Interface Detection (SID/STWI) 233
24.1. SID (STWI) Structure 233
24.2. SID Register 234
24.3. SID Sample Code 235
25. Beeper 236
25.1. Beeper Register 236
25.2. Beeper Sample Code 237
26. Keypad Interrupt (KBI) 238
26.1. KBI Structure 239
26.2. KBI Register 240
27. 10-Bit ADC 242
27.1. ADC Structure 242
27.2. ADC Operation 243
27.2.1. ADC Input Channels 243
27.2.2. ADC Voltage Reference 243
27.2.3. Starting a Conversion 243
27.2.4. ADC Conversion Time 243
27.2.5. I/O Pins Used with ADC Function 244
27.2.6. Idle and Power-Down Mode 244
27.3. ADC Register 245
28. Analog Comparator 0/1/2 (AC0/AC1/AC2) 248
28.1. AC0/AC1/AC2 Structure 248

28.2. AC0/AC1/AC2 Register 250
29. ISP and IAP 255
29.1. MG82FG5C64 Flash Memory Configuration 255
29.2. MG82FG5C64 Flash Access in ISP/IAP 256
29.2.1. ISP/IAP Flash Page Erase Mode 257
29.2.2. ISP/IAP Flash Byte Program Mode 259
29.2.3. ISP/IAP Flash Read Mode 261
29.3. ISP Operation 263
29.3.1. Hardware approached ISP 263
29.3.2. Software approached ISP 263
29.3.3. Notes for ISP 264
29.4. In-Application-Programming (IAP) 265
29.4.1. IAP-memory Boundary/Range 265
29.4.2. Update data in IAP-memory 265
29.4.3. Notes for IAP 266
29.5. ISP/IAP Register 267
29.5.1. ISP/IAP Sample Code 270
30. Page P SFR Access 271
31. Auxiliary SFRs 275
32. Hardware Option 282
33. Application Notes 284
33.1. Power Supply Circuit 284
33.2. Reset Circuit 284
33.3. XTAL Oscillating Circuit 285
33.4. ICP and OCD Interface Circuit 286
33.5. In-Chip-Programming Function 287
33.6. On-Chip-Debug Function 288
34. Electrical Characteristics 289
34.1. Absolute Maximum Rating 289
34.2. DC Characteristics 290
34.3. External Clock Characteristics 292
34.4. IHRCO Characteristics 292
34.5. ILRCO Characteristics 292
34.6. CKM Characteristics 293
34.7. Flash Characteristics 293
34.8. ADC Characteristics 294
34.9. Serial Port Timing Characteristics 295
34.10. SPI Timing Characteristics 296
34.11. External Memory Cycle Timing Characteristics 298
35. Instruction Set 300
36. Package Dimension 303
36.1. LQFP-64 (7mm X 7mm) 303
36.2. LQFP-48 (7mm X 7mm) 304
37. Revision History 305
38. Disclaimers 306

1. General Description

The **MG82FG5C64** is a single-chip microcontroller based on a high performance 1-T architecture 80C51 CPU that executes instructions in 1~7 clock cycles (about 6~7 times the rate of a standard 8051 device), and has an 8051 compatible instruction set. Therefore at the same performance as the standard 8051, the **MG82FG5C64** can operate at a much lower speed and thereby greatly reduce the power consumption.

The **MG82FG5C64** has **64K** bytes of embedded Flash memory for code and data. The Flash memory can be programmed either in serial writer mode (via ICP, In-Circuit Programming) or in In-System Programming mode. And, it also provides the In-Application Programming (IAP) capability. ICP and ISP allow the user to download new code without removing the microcontroller from the actual end product; IAP means that the device can write non-volatile data in the Flash memory while the application program is running. There needs no external high voltage for programming due to its built-in charge-pumping circuitry.

The **MG82FG5C64** retains all features of the standard 80C52 with 256 bytes of scratch-pad RAM, **four** 8-bit I/O ports, two external interrupts, a multi-source 4-level interrupt controller, a serial port (UART0) and three timer/counters. In addition, the **MG82FG5C64** has **27** extra I/O port pins (P4.0~P4.7, P5.0~P5.7, P6.0~P6.7 and P7.0~P7.2), one XRAM of **3840** bytes, two extra external interrupts with High/low trigger option, **1MHz 10**-bit ADC, **three** analog comparators, two 16-bit timer/counters (Timer3 and Timer4), two **6-channel** PCAs (PCA0 and PCA1, PCA with dead-time controlled PWM), one 8/16-bit SPI/QPI, three TWSIs (TWSI, TWI1 and STWI), secondary serial port (UART1) to support LIN and SMC, 3rd and 4th serial port (UART2 and UART3) to support SCI, keypad interrupt, Watchdog Timer, Real-Time-Clock module, two Brown-out Detectors, an on-chip crystal oscillator(shared with P6.0 and P6.1), an internal high precision oscillator (IHRCO), an on-chip clock multiplier (CKM) to generate high speed clock source, an internal low speed RC oscillator (ILRCO) and an enhanced serial function in UART0 that facilitates multiprocessor communication and a speed improvement mechanism (X2/X4 mode).

The **MG82FG5C64** has multiple operating modes to reduce the power consumption: idle mode, power down mode, slow mode, sub-clock mode, RTC mode, watch mode and monitor mode. In the Idle mode the CPU is frozen while the peripherals and the interrupt system are still operating. In the Power-Down mode the RAM and SFRs' value are saved and all other functions are inoperative; most importantly, in the Power-down mode the device can be waked up by many interrupt or reset sources. In slow mode, the user can further reduce the power consumption by using the 8-bit system clock pre-scaler to slow down the operating speed. Or select sub-clock mode which clock source is derived from internal low speed oscillator (ILRCO) for CPU to perform an ultra low speed operation. The RTC module supports Real-Time-Clock function in all operating modes. In watch mode, it keeps WDT running in power-down or idle mode and resumes CPU **as an auto-wakeup timer** when WDT overflows. Monitor mode provides the Brown-Out detection in power down mode and resumes CPU when chip VDD reaches the specific detection level.

Additionally, the **MG82FG5C64** is equipped with the Megawin proprietary On-Chip Debug (OCD) interface for In-Circuit Emulator (ICE). The OCD interface provides on-chip and in-system non-intrusive debugging without any target resource occupied. Several operations necessary for an ICE are supported such as Reset, Run, Stop, Step, Run to Cursor and Breakpoint Setting. The user has no need to prepare any development board during firmware developing or the socket adapter used in the traditional ICE probe head. All the thing the user needs to do is to prepare a connector for the dedicated OCD interface. This powerful feature makes the developing very easy for any user.

2. Block Diagram

Figure 2–1. Block Diagram

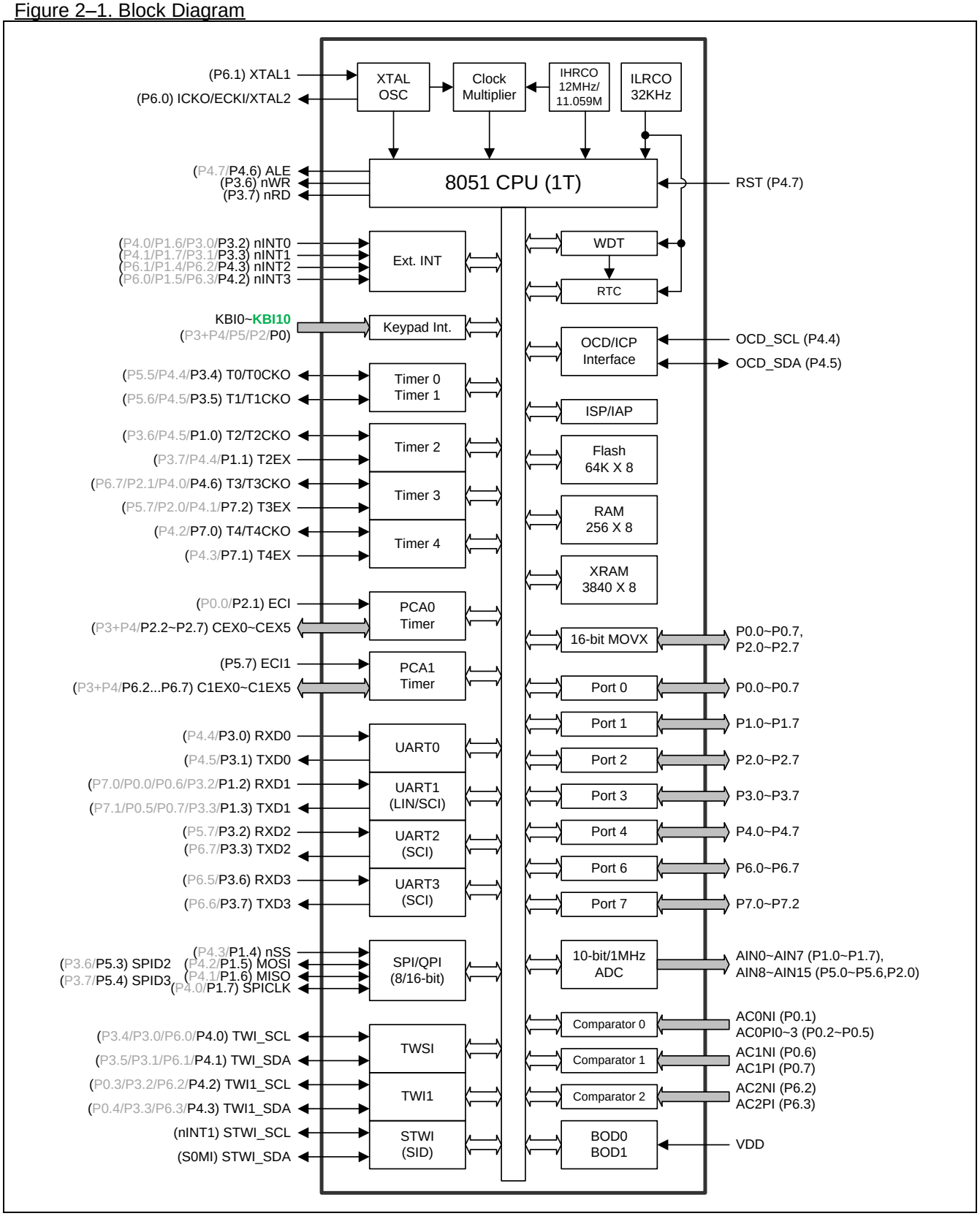

3. Special Function Register

3.1. SFR Map (Page 0~F)

Table 3–1. SFR Map (Page 0~F)

		0/8	1/9	2/A	3/B	4/C	5/D	6/E	7/F
F8	0	*P5*	CH	CCAP0H	CCAP1H	CCAP2H	CCAP3H	CCAP4H	CCAP5H
	1	*P6*	CH1	C1CAP0H	C1CAP1H	C1CAP2H	C1CAP3H	C1CAP4H	C1CAP5H
	2	*P7*	--	--	--	--	--	--	--
F0	0	*B*	PAOE	PCAPWM0	PCAPWM1	PCAPWM2	PCAPWM3	PCAPWM4	PCAPWM5
	1			C1PWM0	C1PWM1	C1PWM2	C1PWM3	C1PWM4	C1PWM5
E8	0	*P4*	CL	CCAP0L	CCAP1L	CCAP2L	CCAP3L	CCAP4L	CCAP5L
	1		CL1	C1CAP0L	C1CAP1L	C1CAP2L	C1CAP3L	C1CAP4L	C1CAP5L
E0	0 1	*ACC*	WDTCR	IFD	IFADRH	IFADRL	IFMT	SCMD	ISPCR
D8	0	*CCON*	CMOD	CCAPM0	CCAPM1	CCAPM2	CCAPM3	CCAPM4	CCAPM5
	1	*C1CON*	C1MOD	C1CAPM0	C1CAPM1	C1CAPM2	C1CAPM3	C1CAPM4	C1CAPM5
D0	0	*PSW*	SIADR	SIDAT	SISTA	SICON	KBPATN	KBCON	KBMASK
	1		SI1ADR	SI1DAT	SI1STA	SI1CON			
C8	0	*T2CON*	T2MOD	RCAP2L	RCAP2H	TL2	TH2	CLRL	CHRL
	1	*T3CON*	T3MOD	RCAP3L	RCAP3H	TL3	TH3	CL1RL	CH1RL
	2	*T4CON*	T4MOD	RCAP4L	RCAP4H	TL4	TH4	--	--
C0	0	*XICON*	XICFG	--	ADCFG0	ADCON0	ADCDL	ADCDH	CKCON0
	1		XICFG1						
B8	0 1	*IP0L*	SADEN	DATH	ADCFG1	PWMCR	PDTCR	RTCCR	CKCON1
B0	0	*P3*	P3M0	P3M1	P4M0	PUCON0	P5M0	RTCTM	IP0H
	1				TREN1	PUCON1	P6M0		
	2				TRLC1	PDRVC0	P7M0		
	3				TSPC1	PDRVC1	--		
A8	0 1	*IE*	SADDR	--	--	SFRPI	EIE1	EIP1L	EIP1H
A0	0	*P2*	AUXR0	AUXR1	AUXR2	AUXR3	EIE2	EIP2L	EIP2H
	1					AUXR4			
	2					AUXR5			
	3					AUXR6			
	4					AUXR7			
98	0	*S0CON*	S0BUF	--	--	S0CFG	--	AC0CON	AC0MOD
	1	*S1CON*	S1BUF	S1BRT	S1BRC	S1CFG	S1CFG1 (LINCFG)	AC1CON	AC1MOD
	2	*S1CON*	S1BUF	S1BRT	S1BRC	S1CFG	S1CFG2 (SMCCFG)	AC2CON	AC2MOD
	3	*S2CON*	S2BUF	S2BRT	S2BRC	S2CFG	S2CGF2	--	--
	4	*S3CON*	S3BUF	S3BRT	S3BRC	S3CFG	S3CFG2	--	--
90	0	*P1*	P1M0	P1AIO	P0M0	PxAIO1	P2M0	BOREV	PCON1
	1			PxAIO2	T2MOD1	--	TREN0		
	2			--	T3MOD1	--	TRLC0		
	3			--	T4MOD1	--	TSPC0		
88	0 1	*TCON*	TMOD	TL0	TL1	TH0	TH1	SFIE	STRETCH
80	0 1	*P0*	SP	DPL	DPH	SPSTAT	SPCON	SPDAT	PCON0
		0/8	**1/9**	**2/A**	**3/B**	**4/C**	**5/D**	**6/E**	**7/F**

3.2. SFR Bit Assignment (Page 0~F)

Table 3–2. SFR Bit Assignment (Page 0~F)

SYMBOL	DESCRIPTION	ADDR	BIT ADDRESS AND SYMBOL								RESET VALUE
			Bit-7	Bit-6	Bit-5	Bit-4	Bit-3	Bit-2	Bit-1	Bit-0	
P0	*Port 0*	*80H*	*P0.7*	*P0.6*	*P0.5*	*P0.4*	*P0.3*	*P0.2*	*P0.1*	*P0.0*	*11111111*
SP	Stack Pointer	81H	SP.7	SP.6	SP.5	SP.4	SP.3	SP.2	SP.1	SP.0	00000111
DPL	Data Pointer Low	82H	DPL.7	DPL.6	DPL.5	DPL.4	DPL.3	DPL.2	DPL.1	DPL.0	00000000
DPH	Data Pointer High	83H	DPH.7	DPH.6	DPH.5	DPH.4	DPH.3	DPH.2	DPH.1	DPH.0	00000000
SPSTAT	SPI Status Register	84H	SPIF	WCOL	THRF	SPIBSY	MODF	DBEN	QPIEN	SPR2/ QDOE	00000000
SPCON	SPI Control Register	85H	SSIG	SPEN	DORD	MSTR	CPOL	CPHA	SPR1	SPR0	00000100
SPDAT	SPI Data Register	86H	SPDAT.7	SPDAT.6	SPDAT.5	SPDAT.4	SPDAT.3	SPDAT.2	SPDAT.1	SPDAT.0	00000000
PCON0	Power Control 0	87H	SMOD1	SMOD0	GF	POF0	GF1	GF0	PD	IDL	00010000
TCON	*Timer Control*	*88H*	*TF1*	*TR1*	*TF0*	*TR0*	*IE1*	*IT1*	*IE0*	*IT0*	*00000000*
TMOD	Timer Mode	89H	T1GATE	T1C/T	T1M1	T1M0	T0GATE	T0C/T	T0M1	T0M0	00000000
TL0	Timer Low 0	8AH	TL0.7	TL0.6	TL0.5	TL0.4	TL0.3	TL0.2	TL0.1	TL0.0	00000000
TL1	Timer Low 1	8BH	TL1.7	TL1.6	TL1.5	TL1.4	TL1.3	TL1.2	TL1.1	TL1.0	00000000
TH0	Timer High 0	8CH	TH0.7	TH0.6	TH0.5	TH0.4	TH0.3	TH0.2	TH0.1	TH0.0	00000000
TH1	Timer High 1	8DH	TH1.7	TH1.6	TH1.5	TH1.4	TH1.3	TH1.2	TH1.1	TH1.0	00000000
SFIE	System Flag INT En.	8EH	SIDFIE	MCDRE	MCDFIE	RTCFIE	--	BOF1IE	BOF0IE	WDTFIE	0110x000
STRETCH	MOVX Timing Stretch	8FH	EMAI1	EMAI0	ALES1	ALES0	RWSH	RWS2	RWS1	RWS0	0x000000
P1	*Port 1*	*90H*	*P1.7*	*P1.6*	*P1.5*	*P1.4*	*P1.3*	*P1.2*	*P1.1*	*P1.0*	*11111111*
P1M0	P1 Mode Register 0	91H	P1M0.7	P1M0.6	P1M0.5	P1M0.4	P1M0.3	P1M0.2	P1M0.1	P1M0.0	00000000
P1AIO	P1 Analog Input Only	92H	P17AIO	P16AIO	P15AIO	P14AIO	P13AIO	P12AIO	P11AIO	P10AIO	00000000
PxAIO2	Px Analog Input Only	92H	P20AIO	P56AIO	P55AIO	P54AIO	P53AIO	P52AIO	P51AIO	P50AIO	00000000
----	----	92H	--	--	--	--	--	--	--	--	----
----	----	92H	--	--	--	--	--	--	--	--	----
P0M0	P0 Mode Register 0	93H	P0M0.7	P0M0.6	P0M0.5	P0M0.4	P0M0.3	P0M0.2	P0M0.1	P0M0.0	00000000
T2MOD1	Timer2 mode 1 Reg.	93H	TL2CS	--	--	T2CKS	--	CP2S2	CP2S1	CP2S0	0xx0x000
T3MOD1	Timer3 mode 1 Reg.	93H	TL3CS	--	--	T3CKS	--	CP3S2	CP3S1	CP3S0	0xx0x000
T4MOD1	Timer4 mode 1 Reg.	93H	TL4CS	--	--	T4CKS	**CP4S3**	CP4S2	CP4S1	CP4S0	0xx00000
PxAIO1	P0 Analog Input Only	94H	P07AIO	P06AIO	P05AIO	P04AIO	P03AIO	P02AIO	P01AIO	AC2AIO	00000000
----	----	94H	--	--	--	--	--	--	--	--	----
----	----	94H	--	--	--	--	--	--	--	--	----
P2M0	P2 Mode Register 0	95H	P2M0.7	P2M0.6	P2M0.5	P2M0.4	P2M0.3	P2M0.2	P2M0.1	P2M0.0	00000000
TREN0	Timer Run Enable Register 0	95H	TR4LE	TR3LE	TR2LE	TR4E	TR3E	TR2E	TR1E	TR0E	00000000
TRLC0	Timer Reload Control Register 0	95H	TL4RLC	TL3RLC	TL2RLC	T4RLC	T3RLC	T2RLC	T1RLC	T0RLC	00000000
TSPC0	Timer Stop Control Register 0	95H	TL4SC	TL3SC	TL2SC	T4SC	T3SC	T2SC	T1SC	T0SC	00000000
BOREV	Bit Order Reversed	96H	BOREV.7	BOREV.6	BOREV.5	BOREV.4	BOREV.3	BOREV.2	BOREV.1	BOREV.0	00000000
PCON1	Power Control 1	97H	SWRF	EXRF	MCDF	RTCF	--	BOF1	BOF0	WDTF	0000x000
S0CON	*Serial 0 Control*	*98H*	*SM00 /FE*	*SM10*	*SM20*	*REN0*	*TB80*	*RB80*	*TI0*	*RI0*	*00000000*
S1CON	*Serial 1 Control*	*98H*	*SM01*	*SM11*	*SM21*	*REN1*	*TB81*	*RB81*	*TI1*	*RI1*	*00000000*
S1CON	*Serial 1 Control*	*98H*	*SM01*	*SM11*	*SM21*	*REN1*	*TB81*	*RB81*	*TI1*	*RI1*	*00000000*
S2CON	*Serial 2 Control*	*98H*	*SM02*	*SM12*	*SM22*	*REN2*	*TB82*	*RB82*	*TI2*	*RI2*	*00000000*
S3CON	*Serial 3 Control*	*98H*	*SM03*	*SM13*	*SM23*	*REN3*	*TB83*	*RB83*	*TI3*	*RI3*	*00000000*
S0BUF	Serial 0 Buffer	99H	S0BUF.7	S0BUF.6	S0BUF.5	S0BUF.4	S0BUF.3	S0BUF.2	S0BUF.1	S0BUF.0	xxxxxxxx
S1BUF	Serial 1 Buffer	99H	S1BUF.7	S1BUF.6	S1BUF.5	S1BUF.4	S1BUF.3	S1BUF.2	S1BUF.1	S1BUF.0	xxxxxxxx
S1BUF	Serial 1 Buffer	99H	S1BUF.7	S1BUF.6	S1BUF.5	S1BUF.4	S1BUF.3	S1BUF.2	S1BUF.1	S1BUF.0	xxxxxxxx
S2BUF	Serial 2 Buffer	99H	S2BUF.7	S2BUF.6	S2BUF.5	S2BUF.4	S2BUF.3	S2BUF.2	S2BUF.1	S3BUF.0	xxxxxxxx
S3BUF	Serial 3 Buffer	99H	S3BUF.7	S3BUF.6	S3BUF.5	S3BUF.4	S3BUF.3	S3BUF.2	S3BUF.1	S3BUF.0	xxxxxxxx
----	----	9AH	--	--	--	--	--	--	--	--	----
S1BRT	S1 Baud-Rate Timer	9AH	S1BRT.7	S1BRT.6	S1BRT.5	S1BRT.4	S1BRT.3	S1BRT.2	S1BRT.1	S1BRT.0	00000000
S1BRT	S1 Baud-Rate Timer	9AH	S1BRT.7	S1BRT.6	S1BRT.5	S1BRT.4	S1BRT.3	S1BRT.2	S1BRT.1	S1BRT.0	00000000
S2BRT	S2 Baud-Rate Timer	9AH	S2BRT.7	S2BRT.6	S2BRT.5	S2BRT.4	S2BRT.3	S2BRT.2	S2BRT.1	S2BRT.0	00000000
S3BRT	S3 Baud-Rate Timer	9AH	S3BRT.7	S3BRT.6	S3BRT.5	S3BRT.4	S3BRT.3	S3BRT.2	S3BRT.1	S3BRT.0	00000000
----	----	9BH	--	--	--	--	--	--	--	--	----
S1BRC	S1 Baud-Rate Counter	9BH	S1BRC.7	S1BRC.6	S1BRC.5	S1BRC.4	S1BRC.3	S1BRC.2	S1BRC.1	S1BRC.0	00000000
S1BRC	S1 Baud-Rate Counter	9BH	S1BRC.7	S1BRC.6	S1BRC.5	S1BRC.4	S1BRC.3	S1BRC.2	S1BRC.1	S1BRC.0	00000000
S2BRC	S2 Baud-Rate Counter	9BH	S2BRC.7	S2BRC.6	S2BRC.5	S2BRC.4	S2BRC.3	S2BRC.2	S2BRC.1	S2BRC.0	00000000
S3BRC	S3 Baud-Rate Counter	9BH	S3BRC.7	S3BRC.6	S3BRC.5	S3BRC.4	S3BRC.3	S3BRC.2	S3BRC.1	S3BRC.0	00000000
S0CFG	S0 Configuration	9CH	URTS	SMOD2	URM0X3	SM30	S0DOR	BTI	UTIE	--	0000100x
S1CFG	S1 Configuration	9CH	SM31	EVPS1	S1DOR	S1TR	S1MOD1	S1TX12	S1CKOE	S1TME	00100000

S1CFG	S1 Configuration	9CH	SM31	EVPS1	S1DOR	S1TR	S1MOD1	S1TX12	S1CKOE	S1TME	00100000
S2CFG	S2 Configuration	9CH	SM32	EVPS2	S2DOR	S2TR	S2MOD1	S2TX12	S2CKOE	S2TME	00100000
S3CFG	S3 Configuration	9CH	SM33	EVPS3	S3DOR	S3TR	S3MOD1	S3TX12	S3CKOE	S3TME	00100000
---	---	9DH	--	--	--	--	--	--	--	--	----
S1CFG1 (LINCFG)	S1 Configuration 1 LIN Configuration	9DH	SBF1	TXER1	S1SB16	ATBR1	TXRX1	SYNC1	--	--	000000xx
S1CFG2 (SMCCFG)	S1 Configuration 2 SMC Configuration	9DH	ESDE1	ESDF1	PEF1	ESOE1	S1BRS.3	S1BRS.2	S1BRS.1	S1BRS.0	00000000
S2CFG2	S2 Configuration 2	9DH	ESDE2	ESDF2	PEF2	ESOE2	S2BRS.3	S2BRS.2	S2BRS.1	S2BRS.0	00000000
S3CFG2	S2 Configuration 2	9DH	ESDE3	ESDF3	PEF3	ESOE3	S3BRS.3	S3BRS.2	S3BRS.1	S3BRS.0	00000000
AC0CON	AC0 Control Reg.	9EH	AC0LP	AC0PDX	AC0OUT	AC0F	AC0EN	AC0INV	AC0M1	AC0M0	00x00000B
AC1CON	AC1 Control Reg.	9EH	AC1LP	AC1PDX	AC1OUT	AC1F	AC1EN	AC1INV	AC1M1	AC1M0	00x00000B
AC2CON	AC2 Control Reg.	9EH	AC2LP	AC2PDX	AC2OUT	AC2F	AC2EN	AC2INV	AC2M1	AC2M0	00x00000B
AC0MOD	AC0 Mode Reg.	9FH	NVRS3	NVRS2	NVRS1	NVRS0	NVRL	AC0FLT	AC0PIS1	AC0PIS0	00000000B
AC1MOD	AC1 Mode Reg.	9FH	--	--	--	AC1NIS	--	AC1FLT	--	--	xxx0x0xxB
AC2MOD	AC2 Mode Reg.	9FH	--	--	--	AC2NIS	--	AC2FLT	--	--	xxx0x0xxB
P2	*Port 2*	*A0H*	*P2.7*	*P2.6*	*P2.5*	*P2.4*	*P2.3*	*P2.2*	*P2.1*	*P2.0*	*11111111*
AUXR0	Auxiliary Register 0	A1H	P60OC1	P60OC0	P60FD	T0XL	P4FS1	P4FS0	INT1H	INT0H	00000000
AUXR1	Auxiliary Register 1	A2H	KBIPS1	KBIPS0	SPIPS0	S1PS1	S1PS0	T01PS0	EXTRAM	DPS	00000000
AUXR2	Auxiliary Register 2	A3H	ALEINV	ADDRO	--	--	T1X12	T0X12	T1CKOE	T0CKOE	00000000
AUXR3	Auxiliary Register 3	A4H	STAF	STOF	BPOC1	BPOC0	ALEPS0	TWIPS1	TWIPS0	T2PS0	00000000
AUXR4	Auxiliary Register 4	A4H	C1IC2S1	C1IC2S0	C1IC0S1	C1IC0S0	AC1OE	AC1FLT1	AC0OE	AC0FLT1	00000000
AUXR5	Auxiliary Register 5	A4H	SnMIPS	S3PS0	S2PS0	C1PPS0	T0OPS0	T4PS0	T3PS1	T3PS0	00000000
AUXR6	Auxiliary Register 5	A4H	--	--	TWI1PS1	TWI1PS0	C1IC4S0	C1PS0	PCAPS0	S1PS2	00000000
AUXR7	Auxiliary Register 7	A4H	--	PBKS5	PBKS4	PBKS3	--	--	AC2OE	AC2FLT1	00000000
EIE2	Extended INT Enable 2	A5H	EAC2	ETWI1	EPCA1	ES3	ET4	ES2	EAC1	ET3	00000000
EIP2L	Ext. INT Priority 2 Low	A6H	PAC2L	PTWI1L	PPCA1L	PS3L	PT4L	PS2L	PAC1L	PT3L	00000000
EIP2H	Ext. INT Priority 2 High	A7H	PAC2H	PTWI1H	PPCA1H	PS3H	PT4H	PS2H	PAC1H	PT3H	00000000
IE	*Interrupt Enable*	*A8H*	*EA*	*GF4*	*ET2*	*ES0*	*ET1*	*EX1*	*ET0*	*EX0*	*00000000*
SADDR	Slave Address	A9H	.7	.6	.5	.4	.3	.2	.1	.0	00000000
SFRPI	SFR Page Index	ACH	--	--	--	--	IDX3	IDX2	IDX1	IDX0	xxxx0000
EIE1	Extended INT Enable 1	ADH	EAC0	ETWSI	EKB	ES1	ESF	EPCA	EADC	ESPI	00000000
EIP1L	Ext. INT Priority 1 Low	AEH	PAC0L	PTWIL	PKBL	PS1L	PSFL	PPCAL	PADCL	PSPIL	00000000
EIP1H	Ext. INT Priority 1 High	AFH	PAC0H	PTWIH	PKBH	PS1H	PSFH	PPCAH	PADCH	PSPIH	00000000
P3	*Port 3*	*B0H*	*P3.7*	*P3.6*	*P3.5*	*P3.4*	*P3.3*	*P3.2*	*P3.1*	*P3.0*	*11111111*
P3M0	P3 Mode Register 0	B1H	P3M0.7	P3M0.6	P3M0.5	P3M0.4	P3M0.3	P3M0.2	P3M0.1	P3M0.0	00000000
P3M1	P3 Mode Register 1	B2H	P3M1.7	P3M1.6	P3M1.5	P3M1.4	P3M1.3	P3M1.2	P3M1.1	P3M1.0	00000000
P4M0	P4 Mode Register 0	B3H	P4M0.7	P4M0.6	P4M0.5	P4M0.4	P4M0.3	P4M0.2	P4M0.1	P4M0.0	00000000
TREN1	Timer Run Enable Register 1	B3H	--	--	--	S3TRE	S2TRE	S1TRE	CR1E	CR0E	xxx00000
TRLC1	Timer Reload Control Register 1	B3H	--	--	--	S3TRLC	S2TRLC	S1TRLC	C1RLC	C0RLC	xxx00000
TSPC1	Timer Stop Control Register 1	B3H	--	--	--	S3TSC	S2TSC	S1TSC	C1SC	C0SC	xxx00000
PUCON0	Port Pull-Up Control 0	B4H	P4PU1	P4PU0	P2PU1	P2PU0	P1PU1	P1PU0	P0PU1	P0PU0	00000000
PUCON1	Port Pull-Up Control 1	B4H	--	--	--	P7PU0	P6PU1	P6PU0	P5PU1	P5PU0	xxx00000
PDRVC0	Port Driving Control 0	B4H	P3DC1	P3DC0	P2DC1	P2DC0	P1DC1	P1DC0	P0DC1	P0DC0	00000000
PDRVC1	Port Driving Control 1	B4H	--	P7DC0	P6DC1	P6DC0	P5DC1	P5DC0	P4DC1	P4DC0	x0000000
P5M0	P5 Mode Register 0	B5H	P5M0.7	P5M0.6	P5M0.5	P5M0.4	P5M0.3	P5M0.2	P5M0.1	P5M0.0	00000000
P6M0	P6 Mode Register 0	B5H	P6M0.7	P6M0.6	P6M0.5	P6M0.4	P6M0.3	P6M0.2	P6M0.1	P6M0.0	00000000
P7M0	P7 Mode Register 0	B5H	--	--	--	--	--	P7M0.2	P7M0.1	P7M0.0	xxxxx000
RTCTM	RTC Timer Register	B6H	RTCCS1	RTCCS0	RTCCT5	RTCCT4	RTCCT3	RTCCT2	RTCCT1	RTCCT0	01111111
IP0H	Interrupt Priority 0 High	B7H	PX3H	PX2H	PT2H	PSH	PT1H	PX1H	PT0H	PX0H	00000000
IP0L	*Interrupt Priority Low*	*B8H*	*PX3L*	*PX2L*	*PT2L*	*PSL*	*PT1L*	*PX1L*	*PT0L*	*PX0L*	*00000000*
SADEN	Slave Address Mask	B9H	.7	.6	.5	.4	.3	.2	.1	.0	00000000
DATH	Data High Byte Reg.	BAH	.15	.14	.13	.12	.11	.10	.9	.8	00000000
ADCFG1	ADC Configuration 1	BBH	CH4	VRS2	VRS1	SIGN	AOS.3	AOS.2	AOS.1	AOS.0	00000000
PWMCR	PWM Control Reg.	BCH	PCAE	EXDT	--	PBKF	PBKM	PBKS2	PBKS1	PBKS0	00x00000
PDTCR	PWM Dead-Time Control Reg.	BDH	DTPS1	DTPS0	DT.5	DT.4	DT.3	DT.2	DT.1	DT.0	00000000
RTCCR	RTC Control Reg.	BEH	RTCE	RTCO	RTCRL5	RTCRL4	RTCRL3	RTCRL2	RTCRL1	RTCRL0	00111111
CKCON1	Clock Control 1	BFH	XTOR	--	XCKS5	XCKS4	XCKS3	XCKS2	XCKS1	XCKS0	0x001011
XICON	*External INT Control*	*C0H*	*INT3H*	*EX3*	*IE3*	*IT3*	*INT2H*	*EX2*	*IE2*	*IT2*	*00000000*

XICFG	Ext. INT. Configured	C1H	INT1IS1	INT1IS0	INT0IS1	INT0IS0	X3FLT	X2FLT	X1FLT	X0FLT	00000000
XICFG1	Ext. INT. Configured 1	C1H	INT3IS1	INT3IS0	INT2IS1	INT2IS0	X3FLT1	X2FLT1	X1FLT1	X0FLT1	00000000
ADCFG0	ADC Configuration 0	C3H	ADCKS2	ADCKS1	ADCKS0	ADRJ	--	--	ADTM1	ADTM0	00000000
ADCON0	ADC Control 0	C4H	ADCEN	--	CH3	ADCI	ADCS	CHS2	CHS1	CHS0	0x000000
ADCDL	ADC Data Low	C5H	ADCV.1	ADCV.0	--	--	--	--	--	--	00xxxxxx
ADCDH	ADC Data High	C6H	ADCV.9	ADCV.8	ADCV.7	ADCV.6	ADCV.5	ADCV.4	ADCV.3	ADCV.2	00000000
CKCON0	Clock Control 0	C7H	AFS	ENCKM	CKMIS1	CKMIS0	CCKS	SCKS2	SCKS1	SCKS0	00010000
T2CON	*Timer 2 Control Reg.*	*C8H*	*TF2*	*EXF2*	*RCLK*	*TCLK*	*EXEN2*	*TR2*	*C/T2*	*CP/RL2*	*00000000*
T3CON	*Timer 3 Control Reg.*	*C8H*	*TF3*	*EXF3*	*TF3L*	*TL3IE*	*EXEN3*	*TR3*	*C/T3*	*CP/RL3*	*00000000*
T4CON	*Timer 4 Control Reg.*	*C8H*	*TF4*	*EXF4*	*TF4L*	*TL4IE*	*EXEN4*	*TR4*	*C/T4*	*CP/RL4*	*00000000*
T2MOD	Timer2 mode Reg.	C9H	T2SPL	TL2X12	T2EXH	T2X12	TR2L	TR2LC	T2OE	T2MS0	00000000
T3MOD	Timer3 mode Reg.	C9H	T3SPL	TL3X12	T3EXH	T3X12	TR3L	TR3LC	T3OE	T3MS0	00000000
T4MOD	Timer4 mode	C9H	T4SPL	TL4X12	T4EXH	T4X12	TR4L	TR4LC	T4OE	T4MS0	00000000
RCAP2L	Timer2 Capture Low	CAH	.7	.6	.5	.4	.3	.2	.1	.0	00000000
RCAP3L	Timer3 Capture Low	CAH	.7	.6	.5	.4	.3	.2	.1	.0	00000000
RCAP4L	Timer4 Capture Low	CAH	.7	.6	.5	.4	.3	.2	.1	.0	00000000
RCAP2H	Timer2 Capture High	CBH	.7	.6	.5	.4	.3	.2	.1	.0	00000000
RCAP3H	Timer3 Capture High	CBH	.7	.6	.5	.4	.3	.2	.1	.0	00000000
RCAP4H	Timer4 Capture High	CBH	.7	.6	.5	.4	.3	.2	.1	.0	00000000
TL2	Timer Low 2	CCH	.7	.6	.5	.4	.3	.2	.1	.0	00000000
TL3	Timer Low 3	CCH	.7	.6	.5	.4	.3	.2	.1	.0	00000000
TL4	Timer Low 4	CCH	.7	.6	.5	.4	.3	.2	.1	.0	00000000
TH2	Timer High 2	CDH	.7	.6	.5	.4	.3	.2	.1	.0	00000000
TH3	Timer High 3	CDH	.7	.6	.5	.4	.3	.2	.1	.0	00000000
TH4	Timer High 4	CDH	.7	.6	.5	.4	.3	.2	.1	.0	00000000
CLRL	CL Reload register	CEH	.7	.6	.5	.4	.3	.2	.1	.0	00000000
CL1RL	CL1 Reload register	CEH	.7	.6	.5	.4	.3	.2	.1	.0	00000000
CHRL	CH Reload register	CFH	.7	.6	.5	.4	.3	.2	.1	.0	00000000
CH1RL	CH1 Reload register	CFH	.7	.6	.5	.4	.3	.2	.1	.0	00000000
PSW	*Program Status Word*	*D0H*	*CY*	*AC*	*F0*	*RS1*	*RS0*	*OV*	*F1*	*P*	*00000000*
SIADR	TWSI Address Reg.	D1H	.7	.6	.5	.4	.3	.2	.1	GC	00000000
SI1ADR	TWI1 Address Reg.	D1H	.7	.6	.5	.4	.3	.2	.1	GC1	00000000
SIDAT	TWSI Data Reg.	D2H	.7	.6	.5	.4	.3	.2	.1	.0	00000000
SI1DAT	TWI1 Data Reg.	D2H	.7	.6	.5	.4	.3	.2	.1	.0	00000000
SISTA	TWSI Status Reg.	D3H									11111000
SI1STA	TWI1 Status Reg.	D3H									11111000
SICON	TWSI Control Reg.	D4H	CR2	ENSI	STA	STO	SI	AA	CR1	CR0	00000000
SI1CON	TW1I Control Reg.	D4H	CR21	ENSI1	STA1	STO1	SI1	AA1	CR11	CR01	00000000
KBPATN	Keypad Pattern	D5H	.7	.6	.5	.4	.3	.2	.1	.0	11111111
KBCON	Keypad Control	D6H	KBCS1	KBCS0	--	--	--	--	PATN_SEL	KBIF	00xxxx01
KBMASK	Keypad Int. Mask	D7H	.7	.6	.5	.4	.3	.2	.1	.0	00000000
CCON	*PCA Control Reg.*	*D8H*	*CF*	*CR*	*CCF5*	*CCF4*	*CCF3*	*CCF2*	*CCF1*	*CCF0*	*00000000*
C1CON	*PCA1 Control Reg.*	*D8H*	*C1F*	*C1R*	*C1CF5*	*C1CF4*	*C1CF3*	*C1CF2*	*C1CF1*	*C1CF0*	*00000000*
CMOD	PCA Mode Reg.	D9H	CIDL	BME4	BME2	BME0	CPS2	CPS1	CPS0	ECF	00000000
C1MOD	PCA1 Mode Reg.	D9H	CIDL1	BME41	BME21	BME01	CPS21	CPS11	CPS01	ECF1	00000000
CCAPM0	PCA Module0 Mode	DAH	DTE0	ECOM0	CAPP0	CAPN0	MAT0	TOG0	PWM0	ECCF0	00000000
C1CAPM0	PCA1 Module0 Mode	DAH	--	ECOM01	CAPP01	CAPN01	MAT01	TOG01	PWM01	ECCF01	x0000000
CCAPM1	PCA Module1 Mode	DBH	--	ECOM1	CAPP1	CAPN1	MAT1	TOG1	PWM1	ECCF1	x0000000
C1CAPM1	PCA1 Module1 Mode	DBH	--	ECOM11	CAPP11	CAPN11	MAT11	TOG11	PWM11	ECCF11	x0000000
CCAPM2	PCA Module2 Mode	DCH	DTE2	ECOM2	CAPP2	CAPN2	MAT2	TOG2	PWM2	ECCF2	x0000000
C1CAPM2	PCA1 Module2 Mode	DCH	--	ECOM21	CAPP21	CAPN21	MAT21	TOG21	PWM21	ECCF21	x0000000
CCAPM3	PCA Module3 Mode	DDH	--	ECOM3	CAPP3	CAPN3	MAT3	TOG3	PWM3	ECCF3	x0000000
C1CAPM3	PCA1 Module3 Mode	DDH	--	ECOM31	CAPP31	CAPN31	MAT31	TOG31	PWM31	ECCF31	x0000000
CCAPM4	PCA Module4 Mode	DEH	DTE4	ECOM4	CAPP4	CAPN4	MAT4	TOG4	PWM4	ECCF4	x0000000
C1CAPM4	PCA1 Module4 Mode	DEH	--	ECOM41	CAPP41	CAPN41	MAT41	TOG41	PWM41	ECCF41	x0000000
CCAPM5	PCA Module5 Mode	DFH	--	ECOM5	CAPP5	CAPN5	MAT5	TOG5	PWM5	ECCF5	x0000000
C1CAPM5	PCA1 Module5 Mode	DFH	--	ECOM51	CAPP51	CAPN51	MAT51	TOG51	PWM51	ECCF51	x0000000
ACC	*Accumulator*	*E0H*	*ACC.7*	*ACC.6*	*ACC.5*	*ACC.4*	*ACC.3*	*ACC.2*	*ACC.1*	*ACC.0*	*00000000*
WDTCR	WDT Control register	E1H	WREN	NSW	ENW	CLRW	WIDL	PS2	PS1	PS0	00000000
IFD	ISP Flash data	E2H	.7	.6	.5	.4	.3	.2	.1	.0	11111111
IFADRH	ISP Flash Addr. High	E3H	.7	.6	.5	.4	.3	.2	.1	.0	00000000
IFADRL	ISP Flash Addr. Low	E4H	.7	.6	.5	.4	.3	.2	.1	.0	00000000
IFMT	ISP Mode Table	E5H	--	--	--	--	--	MS.2	MS.1	MS.0	xxxxx000
SCMD	ISP Serial Command	E6H									xxxxxxxx
ISPCR	ISP Control Register	E7H	ISPEN	SWBS	SRST	CFAIL	--	--	--	--	00000xxx
P4	*Port 4*	*E8H*	*P4.7*	*P4.6*	*P4.5*	*P4.4*	*P4.3*	*P4.2*	*P4.1*	*P4.0*	*11111111*
CL	PCA base timer Low	E9H	.7	.6	.5	.4	.3	.2	.1	.0	00000000
CL1	PCA1 base timer Low	E9H	.7	.6	.5	.4	.3	.2	.1	.0	00000000

CCAP0L	PCA module0 capture Low	EAH	.7	.6	.5	.4	.3	.2	.1	.0	00000000
C1CAP0L	PCA1 module0 capture Low	EAH	.7	.6	.5	.4	.3	.2	.1	.0	00000000
CCAP1L	PCA module1 capture Low	EBH	.7	.6	.5	.4	.3	.2	.1	.0	00000000
C1CAP1L	PCA1 module1 capture Low	EBH	.7	.6	.5	.4	.3	.2	.1	.0	00000000
CCAP2L	PCA module2 capture Low	ECH	.7	.6	.5	.4	.3	.2	.1	.0	00000000
C1CAP2L	PCA1 module2 capture Low	ECH	.7	.6	.5	.4	.3	.2	.1	.0	00000000
CCAP3L	PCA module3 capture Low	EDH	.7	.6	.5	.4	.3	.2	.1	.0	00000000
C1CAP3L	PCA1 module3 capture Low	EDH	.7	.6	.5	.4	.3	.2	.1	.0	00000000
CCAP4L	PCA module4 capture Low	EEH	.7	.6	.5	.4	.3	.2	.1	.0	00000000
C1CAP4L	PCA1 module4 capture Low	EEH	.7	.6	.5	.4	.3	.2	.1	.0	00000000
CCAP5L	PCA module5 capture Low	EFH	.7	.6	.5	.4	.3	.2	.1	.0	00000000
C1CAP5L	PCA1 module5 capture Low	EFH	.7	.6	.5	.4	.3	.2	.1	.0	00000000
B	*B Register*	*F0H*	*B.7*	*B.6*	*B.5*	*B.4*	*B.3*	*B.2*	*B.1*	*B.0*	*00000000*
PAOE	PWM Additional Output Enable	F1H	T0COBO	C1P2BO	C1P2AO	C1P2O	T0COAO	C1P0BO	C1P0AO	C1P0O	00010001
PCAPWM0	PCA PWM0 Mode	F2H	P0RS1	P0RS0	P0PS2	P0PS1	P0PS0	P0INV	EPC0H	EPC0L	00000000
C1PWM0	PCA1 PWM0 Mode	F2H	P0RS11	P0RS01	P0PS21	P0PS11	P0PS01	P0INV1	EPC0H1	EPC0L1	00000000
PCAPWM1	PCA PWM1 Mode	F3H	P1RS1	P1RS0	P1PS2	P1PS1	P1PS0	P1INV	EPC1H	EPC1L	00000000
C1PWM1	PCA1 PWM1 Mode	F3H	P1RS11	P1RS01	P1PS21	P1PS11	P1PS01	P1INV1	EPC1H1	EPC1L1	00000000
PCAPWM2	PCA PWM2 Mode	F4H	P2RS1	P2RS0	P2PS2	P2PS1	P2PS0	P2INV	EPC2H	EPC2L	00000000
C1PWM2	PCA1 PWM2 Mode	F4H	P2RS11	P2RS01	P2PS21	P2PS11	P2PS01	P2INV1	EPC2H1	EPC2L1	00000000
PCAPWM3	PCA PWM3 Mode	F5H	P3RS1	P3RS0	P3PS2	P3PS1	P3PS0	P3INV	EPC3H	EPC3L	00000000
C1PWM3	PCA1 PWM3 Mode	F5H	P3RS11	P3RS01	P3PS21	P3PS11	P3PS01	P3INV1	EPC3H1	EPC3L1	00000000
PCAPWM4	PCA PWM4 Mode	F6H	P4RS1	P4RS0	P4PS2	P4PS1	P4PS0	P4INV	EPC4H	EPC4L	00000000
C1PWM4	PCA1 PWM4 Mode	F6H	P4RS11	P4RS01	P4PS21	P4PS11	P4PS01	P4INV1	EPC4H1	EPC4L1	00000000
PCAPWM5	PCA PWM5 Mode	F7H	P5RS1	P5RS0	P5PS2	P5PS1	P5PS0	P5INV	EPC5H	EPC5L	00000000
C1PWM5	PCA1 PWM5 Mode	F7H	P5RS11	P5RS01	P5PS21	P5PS11	P5PS01	P5INV1	EPC5H1	EPC5L1	00000000
P5	*Port 5*	*F8H*	*P5.7*	*P5.6*	*P5.5*	*P5.4*	*P5.3*	*P5.2*	*P5.1*	*P5.0*	*11111111*
P6	*Port 6*	*F8H*	*P6.7*	*P6.6*	*P6.5*	*P6.4*	*P6.3*	*P6.2*	*P6.1*	*P6.0*	*11111111*
P7	*Port 7*	*F8H*	--	--	--	--	--	*P7.2*	*P7.1*	*P7.0*	*xxxxx111*
CH	PCA base timer High	F9H	.7	.6	.5	.4	.3	.2	.1	.0	00000000
CH1	PCA1 base timer High	F9H	.7	.6	.5	.4	.3	.2	.1	.0	00000000
CCAP0H	PCA Module0 capture High	FAH	.7	.6	.5	.4	.3	.2	.1	.0	00000000
C1CAP0H	PCA1 Module0 capture High	FAH	.7	.6	.5	.4	.3	.2	.1	.0	00000000
CCAP1H	PCA Module1 capture High	FBH	.7	.6	.5	.4	.3	.2	.1	.0	00000000
C1CAP1H	PCA1 Module1 capture High	FBH	.7	.6	.5	.4	.3	.2	.1	.0	00000000
CCAP2H	PCA Module2 capture High	FCH	.7	.6	.5	.4	.3	.2	.1	.0	00000000
C1CAP2H	PCA1 Module2 capture High	FCH	.7	.6	.5	.4	.3	.2	.1	.0	00000000
CCAP3H	PCA Module3 capture High	FDH	.7	.6	.5	.4	.3	.2	.1	.0	00000000
C1CAP3H	PCA1 Module3 capture High	FDH	.7	.6	.5	.4	.3	.2	.1	.0	00000000
CCAP4H	PCA Module4 capture High	FEH	.7	.6	.5	.4	.3	.2	.1	.0	00000000
C1CAP4H	PCA1 Module4 capture High	FEH	.7	.6	.5	.4	.3	.2	.1	.0	00000000
CCAP5H	PCA Module5 capture High	FFH	.7	.6	.5	.4	.3	.2	.1	.0	00000000
C1CAP5H	PCA1 Module5 capture High	FFH	.7	.6	.5	.4	.3	.2	.1	.0	00000000

3.3. Auxiliary SFR Map (Page P)

MG82FG5C64 has an auxiliary SFR page which is indexed by page P and the SFRs' write is a different way from standard 8051 SFR page. The registers in auxiliary SFR map are addressed by IFMT and SCMD like ISP/IAP access flow. Page P has 256 bytes space that can target to **7 physical bytes** and **8 logical bytes**. The **7** physical bytes include IAPLB, CKCON2, CKCON3, CKCON4, PCON2, SPCON0 and DCON0. The 8 logical bytes include PCON0, PCON1, CKCON0, CKCON1, WDTCR, P4, P6 and RTCCR. **Access** on the 8 logical bytes gets the coherence content with the same SFR in Page 0~F. Please refer Section "30 Page P SFR Access" for more detail information.

Table 3–3. Auxiliary SFR Map (Page P)

		0/8	1/9	2/A	3/B	4/C	5/D	6/E	7/F
F8		P6	--	--	--	--	--	--	--
F0		--	--	--	--	--	--	--	--
E8		P4	--	--	--	--	--	--	--
E0		--	WDTCR	--	--	--	--	--	--
D8		--	--	--	--	--	--	--	--
D0		--	--	--	--	--	--	--	--
C8		--	--	--	--	--	--	--	--
C0		--	--	--	--	--	--	--	CKCON0
B8		--	--	--	--	--	--	RTCCR	CKCON1
B0		--	--	--	--	--	--	--	--
A8		--	--	--	--	--	--	--	--
A0		--	--	--	--	--	--	--	--
98		--	--	--	--	--	--	--	--
90		--	--	--	--	--	--	--	PCON1
88		--	--	--	--	--	--	--	
80		--	--	--	--	--	--	--	PCON0
78		--	--	--	--	--	--	--	--
70		--	--	--	--	--	--	--	--
68		--	--	--	--	--	--	--	--
60		--	--	--	--	--	--	--	--
58		--	--	--	--	--	--	--	--
50		--	--	--	--	--	--	--	--
48		SPCON0	--	--	--	DCON0	--	--	--
40		CKCON2	CKCON3	CKCON4	--	PCON2	--	--	--
38		--	--	--	--	--	--	--	--
30		--	--	--	--	--	--	--	--
28		--	--	--	--	--	--	--	--
20		--	--	--	--	--	--	--	--
18		--	--	--	--	--	--	--	--
10		--	--	--	--	--	--	--	--
08		--	--	--	--	--	--	--	--
00		--	--	--	IAPLB	--	--	--	--
		0/8	1/9	2/A	3/B	4/C	5/D	6/E	7/F

3.4. Auxiliary SFR Bit Assignment (Page P)

Table 3–4. Auxiliary SFR Bit Assignment (Page P)

SYMBOL	DESCRIPTION	ADDR	BIT ADDRESS AND SYMBOL								RESET VALUE
			Bit-7	Bit-6	Bit-5	Bit-4	Bit-3	Bit-2	Bit-1	Bit-0	
Physical Bytes											
IAPLB	IAP Low Boundary	03H	IAPLB6	IAPLB5	IAPLB4	IAPLB3	IAPLB2	IAPLB1	IAPLB0	0	
CKCON2	Clock Control 2	40H	XTGS1	XTGS0	XTALE	IHRCOE	MCKS1	MCKS0	OSCS1	OSCS0	01010000
CKCON3	Clock Control 3	41H	WDTCS1	WDTCS0	FWKP	--	MCKD1	MCKD0	MCDS1	MCDS0	00000010
CKCON4	Clock Control 4	42H	RCSS2	RCSS1	RCSS0	RPSC2	RPSC1	RPSC0	RTCCS3	RTCCS2	00000000
PCON2	Power Control 2	44H	AWBOD1	AWBOD0	BO1S1	BO1S0	BO1RE	EBOD1	BO0RE	1	0000x1x1
SPCON0	SFR Page Control 0	48H	RTCCTL	P6CTL	P4CTL	WRCTL	CKCTL1	CKCTL0	PWCTL1	PWCTL0	00000000
DCON0	Device Control 0	4CH	HSE	IAPO	--	--	--	IORCTL	RSTIO	OCDE	00000011
Logical Bytes											
PCON0	Power Control 0	87H	SMOD1	SMOD0	GF	POF0	GF1	GF0	PD	IDL	00010000
PCON1	Power Control 1	97H	SWRF	EXRF	MCDF	RTCF	--	BOF1	BOF0	WDTF	0000X000
RTCCR	RTC Control Register	BEH	RTCE	RTCO	RTCRL.5	RTCRL.4	RTCRL.3	RTCRL.2	RTCRL.1	RTCRL.0	00111111
CKCON1	Clock Control 1	BFH	XTOR	--	XCKS5	XCKS4	XCKS3	XCKS2	XCKS1	XCKS0	0x001011
CKCON0	Clock Control 0	C7H	AFS	ENCKM	CKMIS1	CKMIS0	CCKS	SCKS2	SCKS1	SCKS0	00010000
WDTCR	Watch-dog-timer Control register	E1H	WREN	NSW	ENW	CLRW	WIDL	PS2	PS1	PS0	00000000
P4	Port 4	E8H	P4.7	P4.6	P4.5	P4.4	P4.3	P4.2	P4.1	P4.0	11111111
P6	Port 6	F8H	P6.7	P6.6	P6.5	P6.4	P6.3	P6.2	P6.1	P6.0	11111111

4. Pin Configurations

4.1. Package Instruction

Figure 4–1. LQFP64 Top View

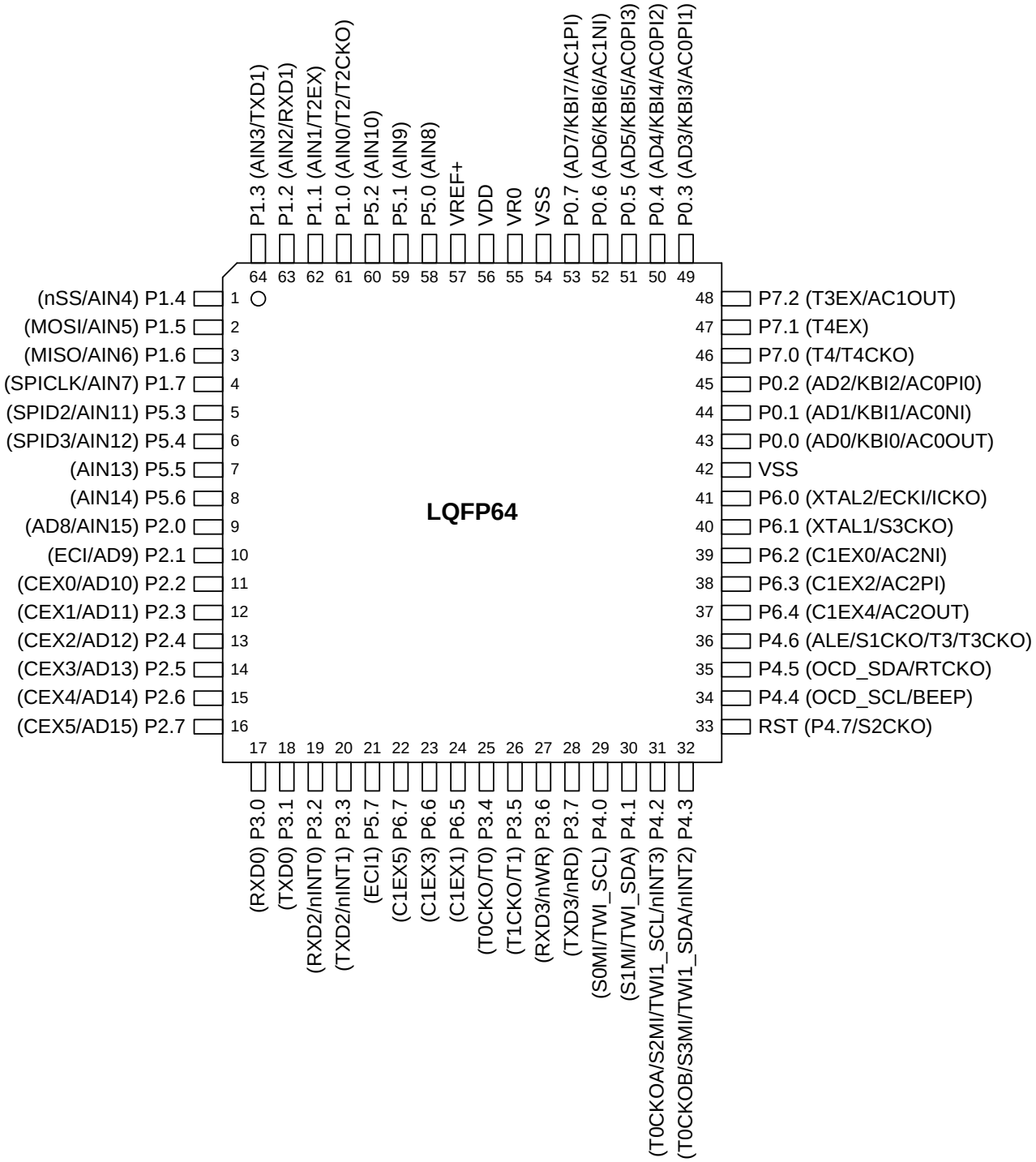

Figure 4–2. LQFP48 Top View

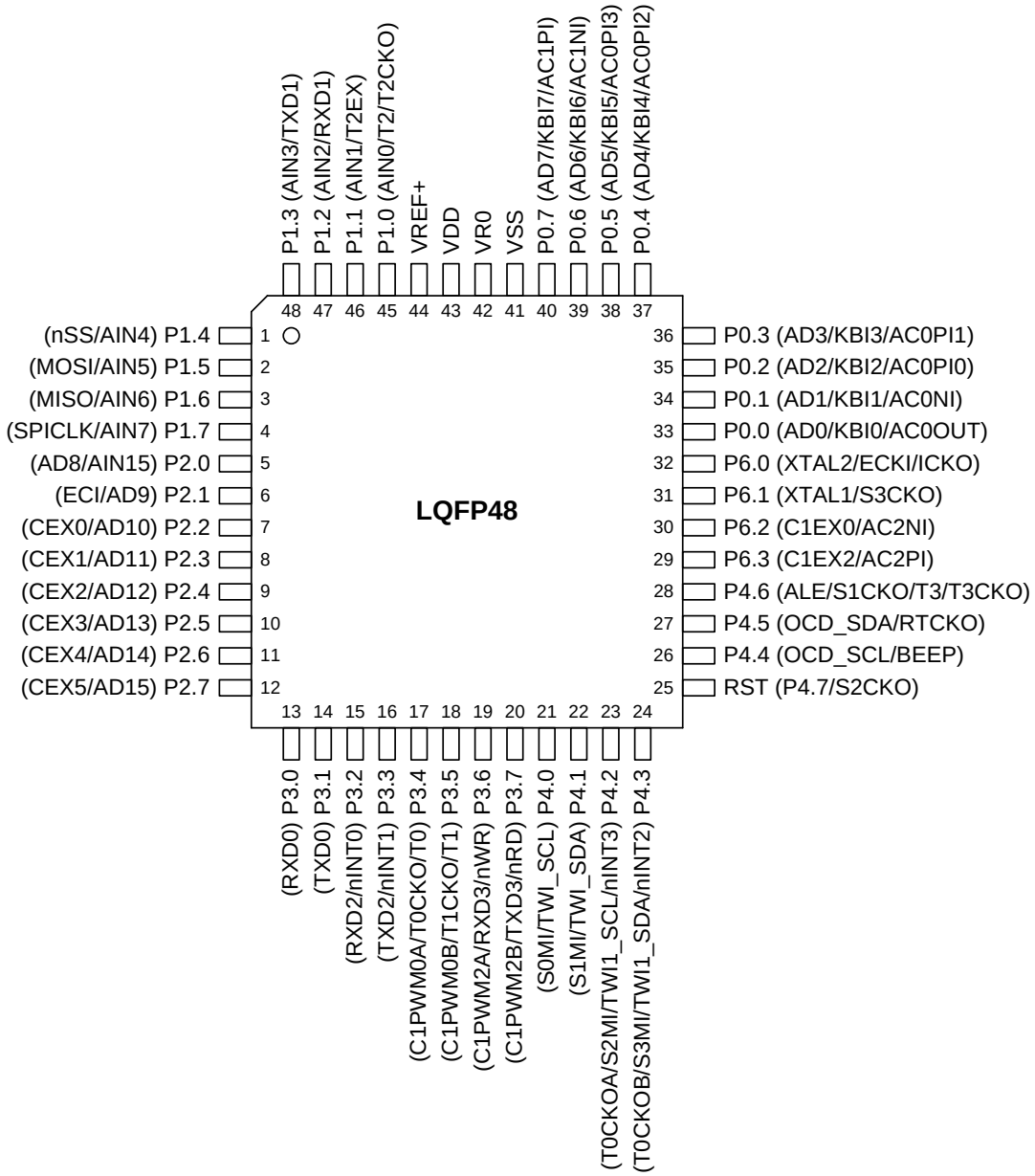

4.2. Pin Description

Table 4–1. Pin Description

MNEMONIC	PIN NUMBER		I/O TYPE	DESCRIPTION
	64-Pin LQFP	48-Pin LQFP		
P0.0 (AD0) (KBI0) (AC0OUT)	43	33	I/O	* Port 0.0. * AD0: multiplexed A0/D0 during external data memory access. * KBI0: keypad input 0. * AC0OUT: Analog Comparator 0 output.
P0.1 (AD1) (KBI1) (AC0NI)	44	34	I/O	* Port 0.1. * AD1: multiplexed A1/D1 during external data memory access. * KBI1: keypad input 1. * AC0NI: Analog Comparator 0 negative input.
P0.2 (AD2) (KBI2) (AC0PI0)	45	35	I/O	* Port 0.2. * AD2: multiplexed A2/D2 during external data memory access. * KBI2: keypad input 2. * AC0PI0: Analog Comparator 0 positive input channel 0.
P0.3 (AD3) (KBI3) (AC0PI1)	49	36	I/O	* Port 0.3. * AD3: multiplexed A3/D3 during external data memory access. * KBI3: keypad input 3. * AC0PI1: Analog Comparator 0 positive input channel 1.
P0.4 (AD4) (KBI4) (AC0PI2)	50	37	I/O	* Port 0.4. * AD4: multiplexed A4/D4 during external data memory access. * KBI4: keypad input 4. * AC0PI2: Analog Comparator 0 positive input channel 2.
P0.5 (AD5) (KBI5) (AC0PI3)	51	38	I/O	* Port 0.4. * AD4: multiplexed A4/D4 during external data memory access. * KBI4: keypad input 4. * AC0PI3: Analog Comparator 0 positive input channel 3.
P0.6 (AD6) (KBI6) (AC1NI)	52	39	I/O	* Port 0.6. * AD6: multiplexed A6/D6 during external data memory access. * KBI6: keypad input 6. * AC1NI: Analog Comparator 1 negative input.
P0.7 (AD7) (KBI7) (AC1PI)	53	40	I/O	* Port 0.7. * AD7: multiplexed A7/D7 during external data memory access. * KBI7: keypad input 7. * AC1PI: Analog Comparator 1 positive input.
P1.0 (AIN0) (T2) (T2CKO)	61	45	I/O	* Port 1.0. * AIN0: ADC channel-0 analog input. * T2: Timer/Counter 2 external clock input. * T2CKO: Timer 2 programmable clock output.
P1.1 (AIN1) (T2EX)	62	46	I/O	* Port 1.1. * AIN1: ADC channel-1 analog input. * T2EX: Timer/Counter 2 external control input.
P1.2 (AIN2) (RXD1)	63	47	I/O	* Port 1.2. * AIN2: ADC channel-2 analog input. * RXD1: UART1 serial input port.
P1.3 (AIN3) (TXD1)	64	48	I/O	* Port 1.3. * AIN3: ADC channel-3 analog input. * TXD1: UART1 serial output port.
P1.4 (AIN4) (nSS)	1	1	I/O	* Port 1.4. * AIN4: ADC channel-4 analog input. * nSS: SPI Slave select.
P1.5 (AIN5) (MOSI)	2	2	I/O	* Port 1.5. * AIN5: ADC channel-5 analog input. * MOSI: SPI master out & slave in and SPID0 for QPI mode.
P1.6 (AIN6) (MISO)	3	3	I/O	* Port 1.6. * AIN6: ADC channel-6 analog input. * MISO: SPI master in & slave out and SPID1 for QPI mode.
P1.7 (AIN7) (SPICLK)	4	4	I/O	* Port 1.7. * AIN7: ADC channel-7 analog input. * SPICLK: SPI clock, output for master and input for slave.
P2.0 (AIN15) (AD8)	9	5	I/O	* Port 2.0. * AIN15: ADC channel-15 analog input. * AD8: multiplexed A8/D8 during external data memory access.
P2.1	10	6	I/O	* Port 2.1.

(AD9) (ECI)				* AD9: multiplexed A9/D9 during external data memory access. * ECI: PCA external clock input.
P2.2 (AD10) (CEX0)	11	7	I/O	* Port 2.2. * AD10: multiplexed A10/D10 during external data memory access. * CEX0: PCA module-0 external I/O.
P2.3 (AD11) (CEX1)	12	8	I/O	* Port 2.3. * AD11: multiplexed A11/D11 during external data memory access. * CEX1: PCA module-1 external I/O.
P2.4 (AD12) (CEX2)	13	9	I/O	* Port 2.4. * AD12: multiplexed A12/D12 during external data memory access. * CEX2: PCA module-2 external I/O.
P2.5 (AD13) (CEX3)	14	10	I/O	* Port 2.5. * AD13: multiplexed A13/D13 during external data memory access. * CEX3: PCA module-3 external I/O.
P2.6 (AD14 (CEX4)	15	11	I/O	* Port 2.6. * AD14 multiplexed A14D14during external data memory access. * CEX4: PCA module-4 external I/O.
P2.7 (AD15 (CEX5)	16	27	I/O	* Port 2.7. * AD15 multiplexed A15D15during external data memory access. * CEX5: PCA module-5 external I/O.
P3.0 (RXD0)	17	13	I/O	* Port 3.0. * RXD0: UART0 serial input port.
P3.1 (TXD0)	18	14	I/O	* Port 3.1. * TXD0: UART0 serial output port.
P3.2 (nINT0) (RXD2)	19	15	I/O	* Port 3.2. * nINT0: external interrupt 0 input. * RXD2 UART2 serial input port.
P3.3 (nINT1) (TXD2)	20	16	I/O	* Port 3.3. * nINT1: external interrupt 1 input. * TXD2 :UART2 serial output port.
P3.4 (T0) (T0CKO) (C1PWM0A)	25	17	I/O	* Port 3.4. * T0: Timer/Counter 0 external input. * T0CKO: Timer 0 programmable clock output. * C1PWM0A: PCA1 PWM0 output sub-channel A.
P3.5 (T1) (T1CKO) (C1PWM0B)	26	18	I/O	* Port 3.5. * T1: Timer/Counter 1 external input. * T1CKO: Timer 1 programmable clock output. * C1PWM0B: PCA1 PWM0 output sub-channel B.
P3.6 (nWR) (RXD3) (C1PWM2A)	27	19	I/O	* Port 3.6. * nWR: external data memory write strobe. * RXD3: UART3 serial input port. * C1PWM2A: PCA1 PWM2 output sub-channel A.
P3.7 (nRD) (TXD3) (C1PWM2B)	28	20	I/O	* Port 3.7. * nRD: external data memory read strobe. * TXD3: UART3 serial output port. * C1PWM0A: PCA1 PWM2 output sub-channel B.
P4.0 (TWI_SCL) (S0MI)	29	21	I/O	* Port 4.0. * TWSI_SCL: serial clock of TWSI. * S0MI: UART0 SPI Master mode data Input.
P4.1 (TWI_SDA) (S1MI)	30	22	I/O	* Port 4.1. * TWSI_SDA: serial data of TWSI. * S1MI: UART1 SPI Master mode data Input.
P4.2 (nINT3) (TWI1_SCL) (S2MI) (T0CKOA)	31	23	I/O	* Port 4.2. * nINT3: external interrupt 3 input. * TWI1_SCL: serial clock of TWI1 * S2MI: UART2 SPI Master mode data Input. * T0CKOA: T0CKO output sub-channel A.
P4.3 (nINT2) (TWI1_SDA) (S3MI) (T0CKOB)	32	24	I/O	* Port 4.3. * nINT2: external interrupt 2 input. * TWI1_SDA: serial data of TWI1. * S3MI: UART3 SPI Master mode data Input. * T0CKOA: T0CKO output sub-channel B.
P4.4 (OCD_SCL) (BEEP)	34	26	I/O	* Port 4.4. * OCD_SCL: OCD interface, serial clock. * BEEP: Beeper output.
P4.5	35	27	I/O	* Port 4.5.

(RTCKO) (OCD_SDA)				* OCD_SDA: OCD interface, serial data. * RTCKO: RTC programmable clock output.
P4.6 (ALE) (S1CKO) (T3) (T3CKO)	36	28	I/O	* Port 4.6. * ALE: address latch enable output for external data memory access. * S1CKO: S1BRT programmable clock output. * T3: Timer/Counter 3 external clock input. * T3CKO: Timer 3 programmable clock output.
P5.0 (AIN8)	58	--	I/O	* Port 5.0. * AIN8: ADC channel-8 analog input.
P5.1 (AIN9)	59	--	I/O	* Port 5.1. * AIN9: ADC channel-9 analog input.
P5.2 (AIN10)	60	--	I/O	* Port 5.2. * AIN10: ADC channel-10 analog input.
P5.3 (AIN11) (SPID2)	5	--	I/O	* Port 5.3. * AIN11: ADC channel-11 analog input. *SPID2: SPI data 2 I/O for QPI mode.
P5.4 (AIN12) (SPID3)	6	--	I/O	* Port 5.4. * AIN12: ADC channel-12 analog input. *SPID3: SPI data 3 I/O for QPI mode.
P5.5 (AIN13)	7	--	I/O	* Port 5.5. * AIN13: ADC channel-13 analog input.
P5.6 (AIN14)	8	--	I/O	* Port 5.6. * AIN14: ADC channel-14 analog input.
P5.7 (ECI1)	21	--	I/O	* Port 5.7. * ECI1: PCA1 external clock input.
P6.0 (XTAL2) (ECKI) (ICKO)	41	32	I/O O I O	* Port 6.0. * XTAL2: Output of on-chip crystal oscillating circuit. * ECKI: In external clock input mode, this is clock input pin. * ICKO: Internal Clock (MCK) Output.
P6.1 (XTAL1) (S3CKO)	40	31	I/O	* Port 6.1. * XTAL1: Input of on-chip crystal oscillating circuit. * S3CKO: S3BRT programmable clock output.
P6.2 (C1EX0) (AC2NI)	39	30	I/O	* Port 6.2. * C1EX0: PCA1 module-0 external I/O. * AC2NI: Analog Comparator 2 negative input.
P6.3 (C1EX2) (AC2PI)	38	29	I/O	* Port 6.3. * C1EX2: PCA1 module-2 external I/O. * AC2PI: Analog Comparator 2 positive input.
P6.4 (C1EX4) (AC2OUT)	37	--	I/O	* Port 6.4. * C1EX4: PCA1 module-4 external I/O. * AC2OUT: Analog Comparator 2 output.
P6.5 (C1EX1)	24	--	I/O	* Port 6.5. * C1EX1: PCA1 module-1 external I/O.
P6.6 (C1EX3)	23	--	I/O	* Port 6.6. * C1EX3: PCA1 module-3 external I/O.
P6.7 (C1EX5)	22	--	I/O	* Port 6.7. * C1EX5: PCA1 module-5 external I/O.
P7.0 (T4) (T4CKO)	46	--	I/O	* Port 7.0. * T4: Timer/Counter 4 external clock input. * T4CKO: Timer 4 programmable clock output.
P7.1 (T4EX)	47	--	I/O	* Port 7.1. * T4EX: Timer/Counter 4 external control input.
P7.2 (T3EX) (AC1OUT)	48	--	I/O	* Port 7.2. * T3EX: Timer/Counter 3 external control input. * AC1OUT: Analog Comparator 1 output.
RST (P4.7) (S2CKO)	33	25	I I/O	* RST: External RESET input, high active. * Port 4.7. * S2CKO: S2BRT programmable clock output.
VREF+	57	44	I/O	* VREF+: ADC Voltage Reference + input.
VR0	55	42	I/O	* VR0. Voltage Reference 0. Connect 0.1uF and 4.7uF to VSS.
VDD	56	43	P	Power supply input.
VSS	54, 42	41	G	Ground, 0 V reference.

4.3. Alternate Function Redirection

Many I/O pins, in addition to their normal I/O function, also serve the alternate function for internal peripherals. For the digital peripherals, all GPIOs serve the alternate function in the default state. However, the user may set the corresponding control bits in AXUR0~AUXR3 to serve their alternate function on the relocated ports.

AUXR0: Auxiliary Register 0

SFR Page = 0~F

SFR Address = 0xA1 RESET = 000X-0000

7	6	5	4	3	2	1	0
P60OC1	P60OC0	P60FD	T0XL	P4FS1	P4FS0	INT1H	INT0H
R/W	R/W	R/W	R/W	R/W	R/W	R/W	R/W

Bit 7~6: P6.0 function configured control bit 1 and 0. The two bits only act when internal RC oscillator (IHRCO or ILRCO) is selected for system clock source. In crystal mode, XTAL2 and XTAL1 are the alternated function of P6.0 and P6.1. In external clock input mode, P6.0 is the dedicated clock input pin. In internal oscillator condition, P6.0 provides the following selections for GPIO or clock source generator. When P60OC[1:0] index to non-P6.0 GPIO function, P6.0 will drive the on-chip RC oscillator output to provide the clock source for other devices.

P60OC[1:0]	P60 function	I/O mode
00	P60	By P6M0.0
01	MCK	By P6M0.0
10	MCK/2	By P6M0.0
11	MCK/4	By P6M0.0

Please refer Section "8 System Clock" to get the more detailed clock information. For clock-out on P6.0 function, it is recommended to set P6M0.0 to "1" which selects P6.0 as push-push output mode.

Bit 5: P60FD, P6.0 Fast Driving.
0: P6.0 output with default driving.
1: P6.0 output with fast driving enabled. If P6.0 is configured to clock output, enable this bit when P6.0 output frequency is more than 12MHz at 5V application or more than 6MHz at 3V application.

Bit 3~2: P4.4 and P4.5 alternated function selection.

P4FS[1:0]	P4.4	P4.5
00	P4.4	P4.5
01	RXD0	TXD0
10	T0/T0CKO	T1/T1CKO
11	T2EX	T2/T2CKO

AUXR1: Auxiliary Control Register 1

SFR Page = 0~F

SFR Address = 0xA2 RESET = 0000-0000

7	6	5	4	3	2	1	0
KBIPS1	KBIPS0	SPIPS0	S1PS1	S1PS0	T01PS0	EXTRAM	DPS
R/W	R/W	R/W	R/W	R/W	R/W	R/W	R/W

Bit 7~6: KBIPS1~0, KBI Port Selection [1:0].

KBIPS1~0	KBI.7~0
00	P0.7 ~ P0.0
01	P2.7 ~ P2.0
10	P5.7 ~ P5.0
11	P4.3~P4.0, P3.7~P3.4

Bit 5: SPIPS0, SPI Port Selection 0.

SPIPS0	nSS	MOSI	MISO	SPICLK	SPID2	SPID3
0	P1.4	P1.5	P1.6	P1.7	P5.3	P5.4
1	P4.3	P4.2	P4.1	P4.0	P3.6	P3.7

Bit 4~3: S1PS1~0, Serial Port 1 (UART1) Port Selection [1:0]

S1PS2	S1PS1~0	RXD1	TXD1
0	00	P1.2	P1.3
0	01	P3.2	P3.3
0	10	P0.6	P0.7
0	11	P0.0	P0.5
1	xx	P7.0	P7.1

Bit 2: T01PS0, Timer0/1 Port Selection 0.

T01PS0	T0/T0CKO	T1/T1CKO
0	P3.4	P3.5
1	P5.5	P5.6

AUXR2: Auxiliary Register 2

SFR Page = 0~F

SFR Address = 0xA3 RESET = 0000-0000

7	6	5	4	3	2	1	0
ALEINV	ADDRO	--	--	T1X12	T0X12	T1CKOE	T0CKOE
R/W	**R/W**	**W**	**W**	**R/W**	**R/W**	**R/W**	**R/W**

Bit 7: ALEINV, ALE inverted output.
0: Keep ALE as high pulse active.
1: Change ALE to low pulse active.

Bit 6: ADDRO, Address output on external memory access cycle.
0: Disable the address output on external memory access cycle.
1: Enable the address output on external memory access cycle when EMAI.1~0 is equal to “11” only.

ADDRO	P5.7~0	P6.7~2	P7.1~0
0	P5.7~0	P6.7~2	P7.1~0
1	ADD[7:0]	ADD[15:10]	ADD[9:8]

AUXR3: Auxiliary Register 3

SFR Page = **0 only**

SFR Address = 0xA4 RESET = 0000-0000

7	6	5	4	3	2	1	0
STAF	STOF	BPOC1	BPOC0	ALEPS0	TWIPS1	TWIPS0	T2PS0
R/W	**R/W**	**R/W**	**R/W**	**R/W**	**R/W**	**R/W**	**R/W**

Bit 3: ALEPS0, ALE port selection 0.

ALEPS0	ALE
0	P4.6
1	P4.7

Bit 2~1: TWIPS1~0, TWSI Port Selection [1:0].

TWIPS1~0	TWI_SCL	TWI_SDA
00	P4.0	P4.1
01	P6.0	P6.1
10	P3.0	P3.1
11	P3.4	P3.5

Bit 0: T2PS0, Timer 2 Port Selection 0.

T2PS0	T2/T2CKO	T2EX
0	P1.0	P1.1
1	P3.6	P3.7

AUXR4: Auxiliary Register 4

SFR Page = **1 only**

SFR Address = 0xA4 RESET = 0000-0000

7	6	5	4	3	2	1	0
C1IC2S1	C1IC2S0	C1IC0S1	C1IC0S0	AC1OE	AC1FLT1	AC0OE	AC0FLT1
R/W	**R/W**	**R/W**	**R/W**	**R/W**	**R/W**	**R/W**	**R/W**

Bit 7~6: C1IC2S1~0, PCA1 Input Channel 2 input Selection.

C1IC2S1~0	C1EX2 input
00	C1EX2 Port Pin
01	AC1OUT
10	--
11	AC0OUT

Bit 5~4: C1IC0S1~0, PCA1 Input Channel 0 input Selection.

C1IC0S1~0	C1EX0 input
00	C1EX0 Port Pin
01	AC0OUT
10	--
11	ILRCO

Bit 3: AC1OE, AC1OUT output enable on port pin.
0: Disable AC1OUT output on port pin.
1: Enable AC1OUT output on P7.2.

Bit 1: AC0OE, AC0OUT output enable on port pin.
0: Disable AC0OUT output on port pin.
1: Enable AC0OUT output on P0.0.

AUXR5: Auxiliary Register 5

SFR Page = **2 only**

SFR Address = 0xA4 RESET = 0000-0000

7	6	5	4	3	2	1	0
SnMIPS	S3PS0	S2PS0	C1PPS0	T0OPS0	T4PS0	T3PS1	T3PS0
R/W	**R/W**	**R/W**	**R/W**	**R/W**	**R/W**	**R/W**	**R/W**

Bit 7: SnMIPS, {S0MI, S1MI, S2MI, S3MI} Port Selection.

SnMIPS	S0MI	S1MI	S2MI	S3MI
0	P4.0	P4.1	P4.2	P4.3
1	P5.3	P5.4	P5.5	P5.6

Bit 6: S3PS0, Serial Port 3 (UART3) Port Selection 0.

S3PS0	RXD3	TXD3
0	P3.6	P3.7
1	P6.5	P6.6

Bit 5: S2PS0, Serial Port 2 (UART2) Port Selection 0.

S2PS0	RXD2	TXD2
0	P3.2	P3.3
1	P5.7	P6.7

Bit 4: C1PPS0, {C1PWM0A, C1PWM0B, C1PWM2A, C1PWM2B} Port Selection 0.

C1PPS0	C1PWM0A	C1PWM0B	C1PWM2A	C1PWM2B
0	P3.4	P3.5	P3.6	P3.7
1	P6.0	P6.1	P6.2	P6.3

Bit 3: T0OPS0, Timer 0 Clock Output Port Selection 0.

T0OPS0	T0CKOA	T0CKOB
0	P4.2	P4.3
1	P5.0	P5.1

Bit 2: T4PS0, Timer 4 port selection0.

T4PS0	T4/T4CKO	T4EX
0	P7.0	P7.1
1	P4.2	P4.3

Bit 1~0: T3PS1~0, Timer 3 Port Selection [1:0].

T3PS1~0	T3/T3CKO	T3EX
00	P4.6	P7.2
01	P4.0	P4.1
10	P2.1	P2.0
11	P6.7	P5.7

AUXR6: Auxiliary Register 6

SFR Page = **3 only**

SFR Address = 0xA4 RESET = 0000-0000

7	6	5	4	3	2	1	0
--	--	TWI1PS1	TWI1PS0	C1IC4S0	C1PS0	PCAPS0	S1PS2
R/W	**R/W**	**R/W**	**R/W**	**R/W**	**R/W**	**R/W**	**R/W**

Bit 5~4: TWI1PS1~0, TWI1 Port Selection [1:0].

TWI1PS1~0	TWI1_SCL	TWI1_SDA
00	P4.2	P4.3
01	P6.2	P6.3
10	P3.2	P3.3
11	P0.3	P0.4

Bit 7~6: C1IC4S0, PCA1 Input Channel 4 input Selection.

C1IC4S0	C1EX4 input
0	C1EX4 Port Pin
1	AC2OUT

Bit 2: C1PS0, PCA1 Port Selection 0.

C1PS0	C1EX0	C1EX1	C1EX2	C1EX3	C1EX4	C1EX5
0	P6.2	P6.5	P6.3	P6.6	P6.4	P6.7
1	P3.6	P4.1	P3.7	P4.2	P4.0	P4.3

Bit 1: PCAPS0, PCA Port Selection 0.

PCAPS0	ECI	CEX0	CEX1	CEX2	CEX3	CEX4	CEX5
0	P2.1	P2.2	P2.3	P2.4	P2.5	P2.6	P2.7
1	P0.0	P3.4	P3.5	P4.0	P4.1	P4.2	P4.3

Bit 0: S1PS2, Serial Port 1 (UART1) Port Selection [2]

S1PS2	S1PS1~0	RXD1	TXD1
0	00	P1.2	P1.3
0	01	P3.2	P3.3
0	10	P0.6	P0.7
0	11	P0.0	P0.5
1	xx	P7.0	P7.1

AUXR7: Auxiliary Register 7

SFR Page = **4 only**

SFR Address = 0xA4 RESET = 0000-0000

7	6	5	4	3	2	1	0
GF	PBKS5	PBKS4	PBKS3	GF	GF	AC2OE	AC2FLT1
R/W	**R/W**	**R/W**	**R/W**	**R/W**	**R/W**	**R/W**	**R/W**

Bit 1: AC2OE, AC2OUT output enable on port pin.
0: Disable AC2OUT output on port pin.
1: Enable AC2OUT output on P6.4.

XICFG: External Interrupt Configured Register

SFR Page = **0 only**

SFR Address = 0xC1 RESET = 0000-0000

7	6	5	4	3	2	1	0
INT1IS.1	INT1IS.0	INT0IS.1	INT0IS.0	X3FLT	X2FLT	X1FLT	X0FLT
R/W	**R/W**	**R/W**	**R/W**	**R/W**	**R/W**	**R/W**	**R/W**

Bit 7~6: INT1IS.1~0, nINT3 input selection bits which function is defined as following table.

INT1IS.1~0	Selected Port Pin of nINT1
00	P3.3
01	P3.1
10	P1.7
11	P4.1

Bit 5~4: INT0IS.1~0, nINT0 input selection bits which function is defined as following table.

INT0IS.1~0	Selected Port Pin of nINT0
00	P3.2
01	P3.0
10	P1.6
11	P4.0

XICFG1: External Interrupt Configured 1 Register

SFR Page = **1 only**

SFR Address = 0xC1 RESET = 0000-0000

7	6	5	4	3	2	1	0
INT3IS.1	INT3IS.0	INT2IS.1	INT2IS.0	X3FLT1	X2FLT1	X1FLT1	X0FLT1
R/W	**R/W**	**R/W**	**R/W**	**R/W**	**R/W**	**R/W**	**R/W**

Bit 7~6: INT3IS1~0, nINT3 input selection bits which function is defined as following table.

INT3IS.1~0	Selected Port Pin of nINT3
00	P4.2
01	P6.3
10	P1.5
11	P6.0

Bit 5~4: INT2IS1~0, nINT2 input selection bits which function is defined as following table.

INT2IS.1~0	Selected Port Pin of nINT2
00	P4.3
01	P6.2
10	P1.4
11	P6.1

5. 8051 CPU Function Description

5.1. CPU Register

PSW: Program Status Word

SFR Page = 0~F
SFR Address = 0xD0 RESET = 0000-0000

7	6	5	4	3	2	1	0
CY	AC	F0	RS1	RS0	OV	F1	P
R/W	R/W	R/W	R/W	R/W	R/W	R/W	R/W

CY: Carry bit.
AC: Auxiliary carry bit.
F0: General purpose flag 0.
RS1: Register bank select bit 1.
RS0: Register bank select bit 0.
OV: Overflow flag.
F1: General purpose flag 1.
P: Parity bit.

The program status word (PSW) contains several status bits that reflect the current state of the CPU. The PSW, shown above, resides in the SFR space. It contains the Carry bit, the Auxiliary Carry(for BCD operation), the two register bank select bits, the Overflow flag, a Parity bit and two user-definable status flags.

The Carry bit, other than serving the function of a Carry bit in arithmetic operations, also serves as the "Accumulator" for a number of Boolean operations.

The bits RS0 and RS1 are used to select one of the four register banks shown in Section "6.2 On-Chip Data RAM". A number of instructions refer to these RAM locations as R0 through R7.

The Parity bit reflects the number of 1s in the Accumulator. P=1 if the Accumulator contains an odd number of 1s and otherwise P=0.

SP: Stack Pointer

SFR Page = 0~F
SFR Address = 0x81 RESET = 0000-0111

7	6	5	4	3	2	1	0
SP.7	SP.6	SP.5	SP.4	SP.3	SP.2	SP.1	SP.0
R/W	R/W	R/W	R/W	R/W	R/W	R/W	R/W

The Stack Pointer holds the location of the top of the stack. The stack pointer is incremented before every PUSH operation. The SP register defaults to 0x07 after reset.

DPL: Data Pointer Low

SFR Page = 0~F
SFR Address = 0x82 RESET = 0000-0000

7	6	5	4	3	2	1	0
DPL.7	DPL.6	DPL.5	DPL.4	DPL.3	DPL.2	DPL.1	DPL.0
R/W	R/W	R/W	R/W	R/W	R/W	R/W	R/W

The DPL register is the low byte of the 16-bit DPTR. DPTR is used to access indirectly addressed XRAM and Flash memory.

DPH: Data Pointer High

SFR Page = 0~F
SFR Address = 0x83 RESET = 0000-0000

7	6	5	4	3	2	1	0

DPH.7	DPH.6	DPH.5	DPH.4	DPH.3	DPH.2	DPH.1	DPH.0
R/W	**R/W**	**R/W**	**R/W**	**R/W**	**R/W**	**R/W**	**R/W**

The DPH register is the high byte of the 16-bit DPTR. DPTR is used to access indirectly addressed XRAM and Flash memory.

ACC: Accumulator

SFR Page = 0~F

SFR Address = 0xE0 RESET = 0000-0000

7	6	5	4	3	2	1	0
ACC.7	ACC.6	ACC.5	ACC.4	ACC.3	ACC.2	ACC.1	ACC.0
R/W	**R/W**	**R/W**	**R/W**	**R/W**	**R/W**	**R/W**	**R/W**

This register is the accumulator for arithmetic operations.

B: B Register

SFR Page = 0~F

SFR Address = 0xF0 RESET = 0000-0000

7	6	5	4	3	2	1	0
B.7	B.6	B.5	B.4	B.3	B.2	B.1	B.0
R/W	**R/W**	**R/W**	**R/W**	**R/W**	**R/W**	**R/W**	**R/W**

This register serves as a second accumulator for certain arithmetic operations.

5.2. CPU Timing

The **MG82FG5C64** is a single-chip microcontroller based on a high performance 1-T architecture 80C51 CPU that has an 8051 compatible instruction set, and executes instructions in 1~7 clock cycles (about 6~7 times the rate of a standard 8051 device). It employs a pipelined architecture that greatly increases its instruction throughput over the standard 8051 architecture. The instruction timing is different than that of the standard 8051.

In many 8051 implementations, a distinction is made between machine cycles and clock cycles, with machine cycles varying from 2 to 12 clock cycles in length. However, the 1T-80C51 implementation is based solely on clock cycle timing. All instruction timings are specified in terms of clock cycles. For more detailed information about the 1T-80C51 instructions, please refer section “35 Instruction Set” which includes the mnemonic, number of bytes, and number of clock cycles for each instruction.

5.3. CPU Addressing Mode

Direct Addressing(DIR)
In direct addressing the operand is specified by an 8-bit address field in the instruction. Only internal data RAM and SFRs can be direct addressed.

Indirect Addressing(IND)
In indirect addressing the instruction specified a register which contains the address of the operand. Both internal and external RAM can be indirectly addressed.

The address register for 8-bit addresses can be R0 or R1 of the selected bank, or the Stack Pointer.
The address register for 16-bit addresses can only be the 16-bit data pointer register – DPTR.

Register Instruction(REG)
The register banks, containing registers R0 through R7, can be accessed by certain instructions which carry a 3-bit register specification within the op-code of the instruction. Instructions that access the registers this way are code efficient because this mode eliminates the need of an extra address byte. When such instruction is executed, one of the eight registers in the selected bank is accessed.

Register-Specific Instruction
Some instructions are specific to a certain register. For example, some instructions always operate on the accumulator or data pointer, etc. No address byte is needed for such instructions. The op-code itself does it.

Immediate Constant(IMM)
The value of a constant can follow the op-code in the program memory.

Index Addressing
Only program memory can be accessed with indexed addressing and it can only be read. This addressing mode is intended for reading look-up tables in program memory. A 16-bit base register(either DPTR or PC) points to the base of the table, and the accumulator is set up with the table entry number. Another type of indexed addressing is used in the conditional jump instruction.
In conditional jump, the destination address is computed as the sum of the base pointer and the accumulator.

6. Memory Organization

Like all 80C51 devices, the **MG82FG5C64** has separate address spaces for program and data memory. The logical separation of program and data memory allows the data memory to be accessed by 8-bit addresses, which can be quickly stored and manipulated by the 8-bit CPU.

Program memory (ROM) can only be read, not written to. There can be up to **64K** bytes of program memory. In the **MG82FG5C64**, all the program memory are on-chip Flash memory, and without the capability of accessing external program memory because of no External Access Enable (/EA) and Program Store Enable (/PSEN) signals designed.

Data memory occupies a separate address space from program memory. In the **MG82FG5C64**, there are 256 bytes of internal scratch-pad RAM and **3840** bytes of on-chip expanded RAM(XRAM).

6.1. On-Chip Program Flash

Program memory is the memory which stores the program codes for the CPU to execute, as shown in Figure 6–1. After reset, the CPU begins execution from location 0000H, where should be the starting of the user's application code. To service the interrupts, the interrupt service locations (called interrupt vectors) should be located in the program memory. Each interrupt is assigned a fixed location in the program memory. The interrupt causes the CPU to jump to that location, where it commences execution of the service routine. External Interrupt 0, for example, is assigned to location 0003H. If External Interrupt 0 is going to be used, its service routine must begin at location 0003H. If the interrupt is not going to be used, its service location is available as general purpose program memory.

The interrupt service locations are spaced at an interval of 8 bytes: 0003H for External Interrupt 0, 000BH for Timer 0, 0013H for External Interrupt 1, 001BH for Timer 1, etc. If an interrupt service routine is short enough (as is often the case in control applications), it can reside entirely within that 8-byte interval. Longer service routines can use a jump instruction to skip over subsequent interrupt locations, if other interrupts are in use.

Figure 6–1. Program Memory

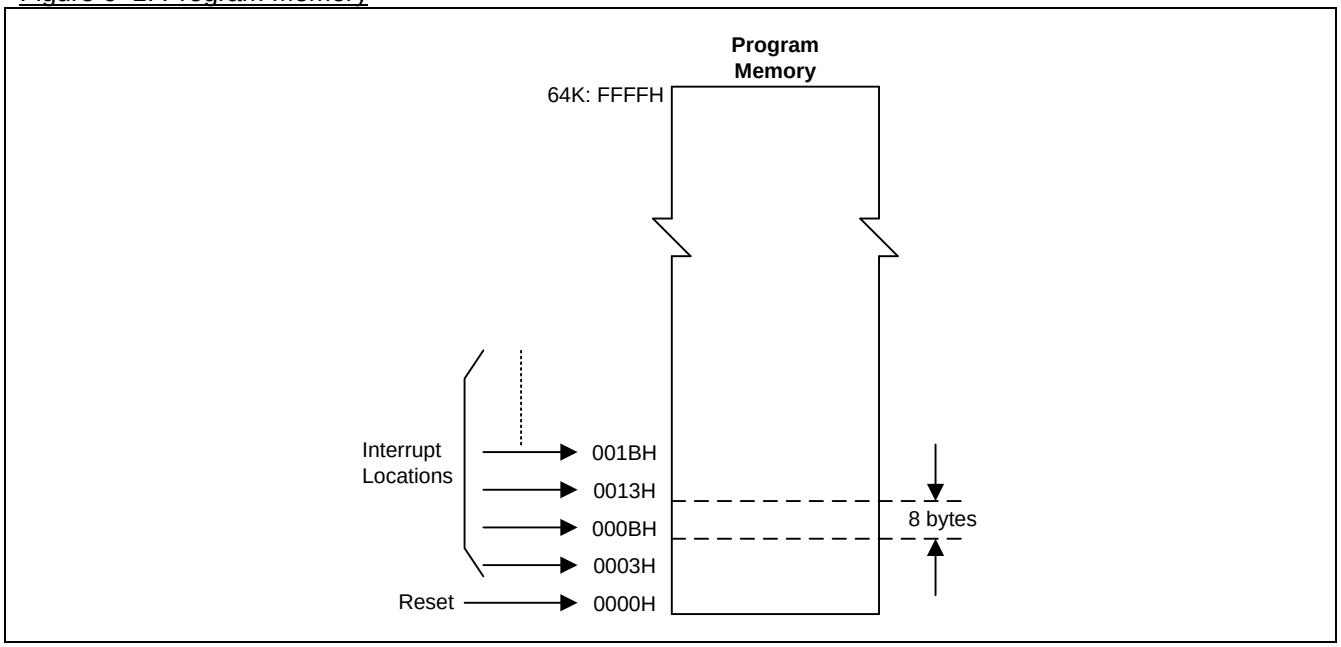

6.2. On-Chip Data RAM

Figure 6–2 shows the internal and external data memory spaces available to the **MG82FG5C64** user. Internal data memory can be divided into three blocks, which are generally referred to as the lower 128 bytes of RAM, the upper 128 bytes of RAM, and the 128 bytes of SFR space. Internal data memory addresses are always 8-bit wide, which implies an address space of only 256 bytes. Direct addresses higher than 7FH access the SFR space; and indirect addresses higher than 7FH access the upper 128 bytes of RAM. Thus the SFR space and the upper 128 bytes of RAM occupy the same block of addresses, 80H through FFH, although they are physically separate entities.

The lower 128 bytes of RAM are present in all 80C51 devices as mapped in Figure 6–3. The lowest 32 bytes are grouped into 4 banks of 8 registers. Program instructions call out these registers as R0 through R7. Two bits in the Program Status Word (PSW) select which register bank is in use. This allows more efficient use of code space, since register instructions are shorter than instructions that use direct addressing. The next 16 bytes above the register banks form a block of bit-addressable memory space. The 80C51 instruction set includes a wide selection of single-bit instructions, and the 128 bits in this area can be directly addressed by these instructions. The bit addresses in this area are 00H through 7FH.

All of the bytes in the Lower 128 can be accessed by either direct or indirect addressing while the Upper 128 can only be accessed by indirect addressing.

Figure 6–4 gives a brief look at the Special Function Register (SFR) space. SFRs include the Port latches, timers, peripheral controls, etc. These registers can only be accessed by direct addressing. Sixteen addresses in SFR space are both byte- and bit-addressable. The bit-addressable SFRs are those whose address ends in 0H or 8H.

To access the external data memory, the EXTRAM bit should be set to 1. Accesses to external data memory can use either a 16-bit address (using ‘MOVX @DPTR’) or an 8-bit address (using ‘MOVX @Ri’), as described below.

Accessing by an 8-bit address

8-bit addresses are often used in conjunction with one or more other I/O lines to page the RAM. If an 8-bit address is being used, the contents of the Port 2 SFR remain at the Port 2 pins throughout the external memory cycle. This will facilitate paging access. Figure 7-5 shows an example of a hardware configuration for accessing up to 2K bytes of external RAM. In multiplexed mode, Port 0 serves as a multiplexed address/data bus to the RAM, and 3 lines of Port 2 are being used to page the RAM. The CPU generates nRD and nWR (alternate functions of P3.7 and P3.6) to strobe the memory. Of course, the user may use any other I/O lines instead of P2 to page the RAM.

Accessing by a 16-bit address

16-bit addresses are often used to access up to 64k bytes of external data memory. Figure 7-6 shows the hardware configuration for accessing 64K bytes of external RAM. Whenever a 16-bit address is used, in addition to the functioning of P0, nRD and nWR, the high byte of the address comes out on Port 2 and it is held during the read or write cycle.

Accessing by a no address multiplexed mode

No address multiplexed mode is provided to access the external data memory without MCU address limitation. Figure 7-7 shows the hardware configuration for accessing the external RAM. It also supports the FIFO structure memory, such as NAND flash. Whenever a non-address mode is selected, in addition to the functioning of P0, nRD and nWR, the address phase is skipped to speed up the access performance.

In multiplexed case, the low byte of the address is time-multiplexed with the data byte on Port 0. ALE (Address Latch Enable) should be used to capture the address byte into an external latch. The address byte is valid at the negative transition of ALE. Then, in a write cycle, the data byte to be written appears on Port 0 just before nWR is activated, and remains there until after nWR is deactivated. In a read cycle, the incoming byte is accepted at Port 0 just before the read strobe is deactivated. During any access to external memory, the CPU writes 0FFH to the Port 0 latch (the Special Function Register), thus obliterating whatever information the Port 0 SFR may have been holding.

To access the on-chip expanded RAM (XRAM), the **EXTRAM** bit should be cleared to 0. Refer to Figure 6–2, the **3840** bytes of XRAM (0000H to 0EFFH) are indirectly accessed by move external instruction, MOVX. An access to XRAM will have not any outputting of address, address latch enable and read/write strobe. That means P0, P2, P4.6(ALE), P3.6 (nWR) and P3.7 (nRD) will keep unchanged during access of on-chip XRAM.

Figure 6–2. Data Memory

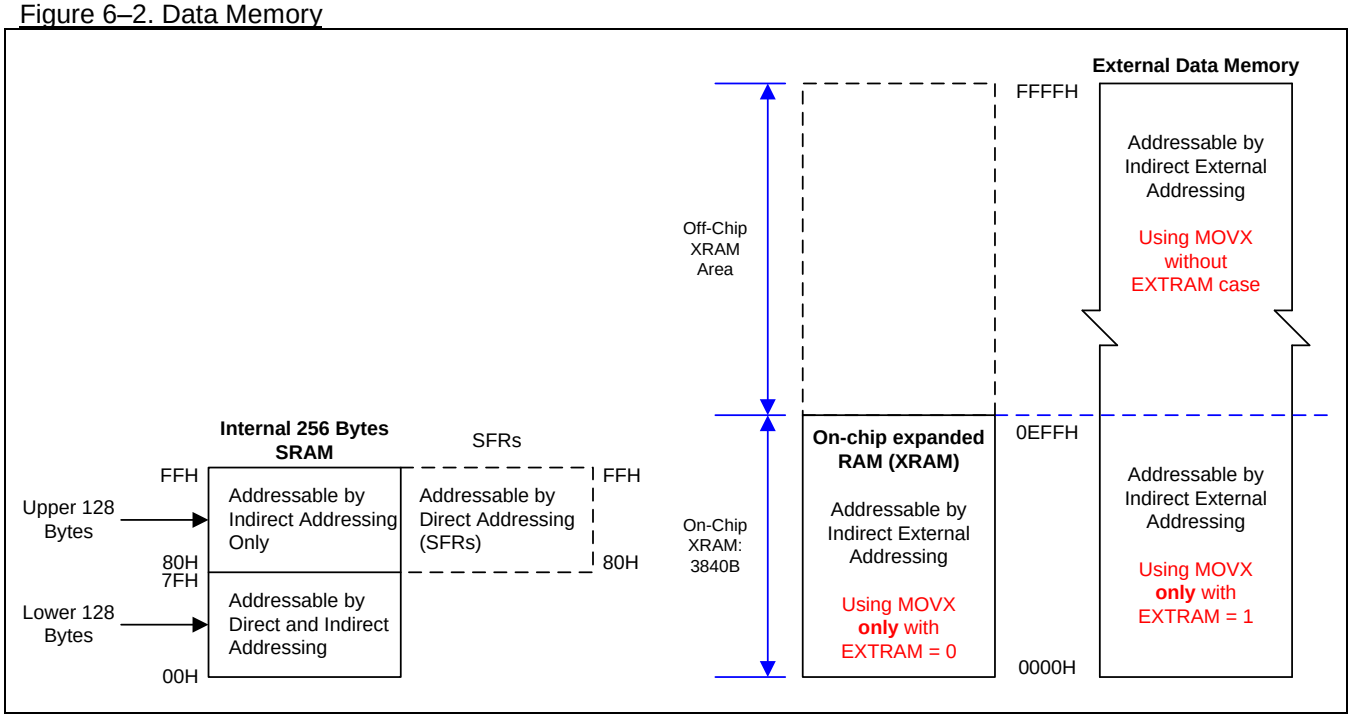

Figure 6–3. Lower 128 Bytes of Internal RAM

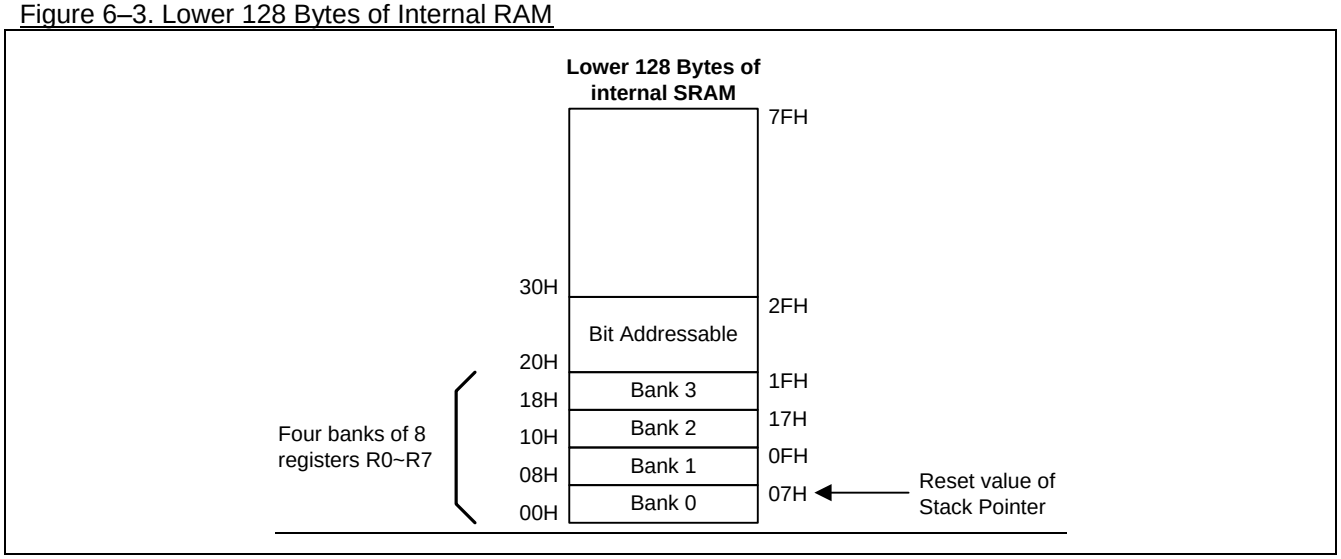

Figure 6–4. SFR Space

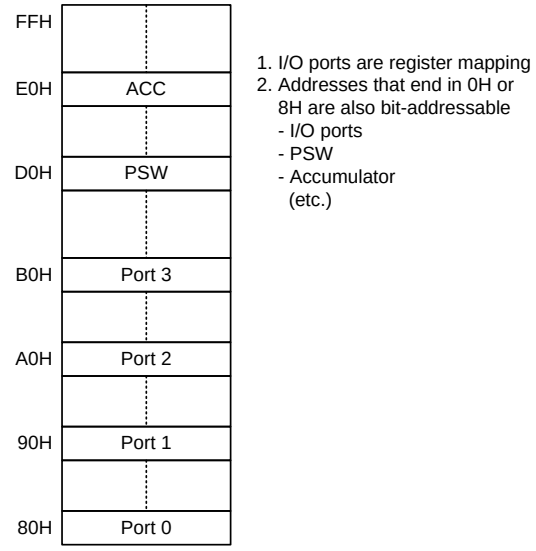

Figure 6–5. 8-bit Address Access

Figure 6–6. 16-bit Address Access

Figure 6–7. No Address Multiplexed Access

6.3. On-chip expanded RAM (XRAM)

To access the on-chip expanded RAM (XRAM), refer to Figure 6–2, the **3840** bytes of XRAM (0000H to **0EFFH**) are indirectly accessed by move external instruction, “MOVX @Ri” and “MOVX @DPTR”. For KEIL-C51 compiler, to assign the variables to be located at XRAM, the “pdata” or “xdata” definition should be used. After being compiled, the variables declared by “pdata” and “xdata” will become the memories accessed by “MOVX @Ri” and “MOVX @DPTR”, respectively. Thus the **MG82FG5C64** hardware can access them correctly.

6.4. Off-Chip External Data Memory access

AUXR1: Auxiliary Control Register 1

SFR Page = 0~F
SFR Address = 0xA2 POR+RESET = 0000-0000

7	6	5	4	3	2	1	0
KBIPS1	KBIPS0	SPIPS0	S1PS1	S1PS0	T01PS0	**EXTRAM**	DPS
R/W	**R/W**	**R/W**	**R/W**	**R/W**	**R/W**	**R/W**	**R/W**

Bit 1: EXTRAM, External data RAM enable.
0: Enable on-chip expanded data RAM (XRAM **3840** bytes) on XRAM access.
1: Disable on-chip expanded data RAM on XRAM access.

STRETCH: MOVX Stretch Register

SFR Page = 0~F
SFR Address = 0x8F POR+RESET = 0X00-0000

7	6	5	4	3	2	1	0
EMAI1	EMAI0	ALES1	ALES0	RWSH	RWS2	RWS1	RWS0
R/W	**R/W**	**R/W**	**R/W**	**R/W**	**R/W**	**R/W**	**R/W**

Bit 7~6: EMAI1~0 configure the External data Memory Access Interface mode as following:

EMAI[1:0]	Mode setting on external data memory access
0 0	Multiplexed address/data on 8-bit data access
0 1	Multiplexed address/data on 16-bit data access
1 0	No Address multiplexed cycle on 8-bit data access
1 1	No Address multiplexed cycle on 16-bit data access

Bit 5~4: ALES[1:0], EMAI ALE pulse width select bits. It **only** has effect when EMAI in Multiplexed mode.
00: ALE high and ALE low pulse width = 1 SYSCLK cycle.
01: ALE high and ALE low pulse width = 2 SYSCLK cycle.
10: ALE high and ALE low pulse width = 3 SYSCLK cycle.
11: ALE high and ALE low pulse width = 4 SYSCLK cycle.

Bit 3: RWSH, EMAI Read/Write pulse Setup/Hold time control.
0: /RD and /WR command Setup/Hold Time = 1 SYSCLK cycle.
1: /RD and /WR command Setup/Hold Time = 2 SYSCLK cycle.

Bit 2~0: RWS[2:0], EMAI Read/Write command pulse width select bits.
000: /RD and /WR pulse width = 1 SYSCLK cycle.
001: /RD and /WR pulse width = 2 SYSCLK cycle.
010: /RD and /WR pulse width = 3 SYSCLK cycle.
011: /RD and /WR pulse width = 4 SYSCLK cycle.
100: /RD and /WR pulse width = 5 SYSCLK cycle.
101: /RD and /WR pulse width = 6 SYSCLK cycle.
110: /RD and /WR pulse width = 7 SYSCLK cycle.
111: /RD and /WR pulse width = 8 SYSCLK cycle.

AUXR2: Auxiliary Register 2

SFR Page = 0~F
SFR Address = 0xA3 RESET = 0000-0000

7	6	5	4	3	2	1	0
ALEINV	ADDRO	--	--	T1X12	T0X12	T1CKOE	T0CKOE
R/W	**R/W**	**W**	**W**	**R/W**	**R/W**	**R/W**	**R/W**

Bit 7: ALEINV,
0: Reserve ALE output to high pulse.
1: Invert ALE output to low pulse.

Bit 6: ADDRO,
0: Disable Address output on port pin in No Address mux-ed mode.
1: Output Address ADD[7:0] on P5[7:0] and ADD[15:8] on P6[7:2] and P7[1:0] in No Address Phase mode.

AUXR3: Auxiliary Register 3

SFR Page = 0 only
SFR Address = 0xA4 RESET = 0000-0000

7	6	5	4	3	2	1	0
STAF	STOF	BPOC1	BPOC0	ALEPS0	TWIPS1	TWIPS0	T2PS0
R/W	**R/W**	**R/W**	**R/W**	**R/W**	**R/W**	**R/W**	**R/W**

Bit 3: ALEPS0, ALE port selection 0.

ALEPS0	ALE
0	P4.6
1	P4.7

DATH: Data High byte

SFR Page = 0~F
SFR Address = 0xBA RESET = 0000-0000

7	6	5	4	3	2	1	0
DATH.7	DATH.6	DATH.5	DATH.4	DATH.3	DATH.2	DATH.1	DATH.0
R/W	**R/W**	**R/W**	**R/W**	**R/W**	**R/W**	**R/W**	**R/W**

6.4.1. Multiplexed 8-bit Address Mode for MOVX 8-bit Data Access

Muxed 8-bit Address mode for 8-bit Data Write

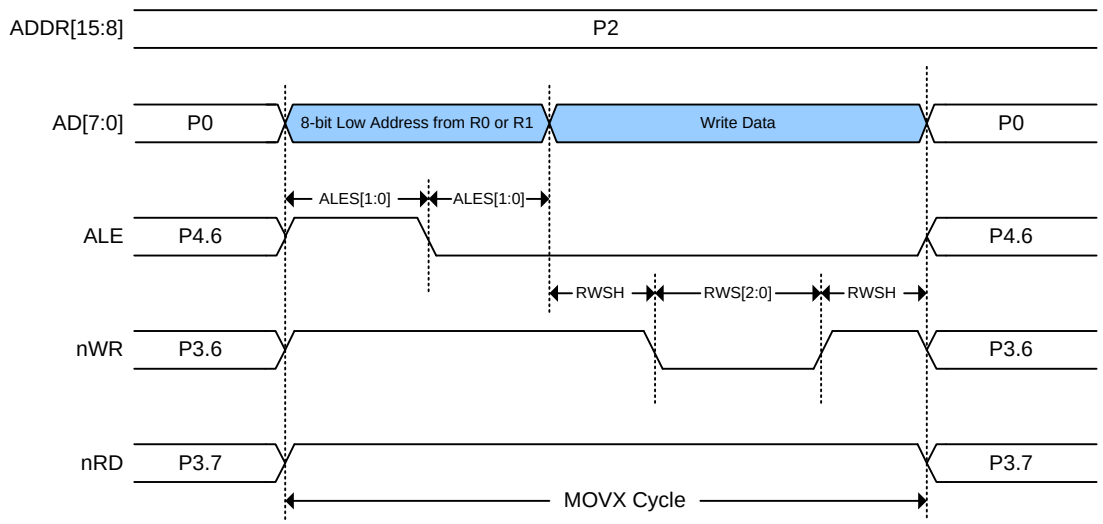

Muxed 8-bit Address mode for 8-bit Data Read

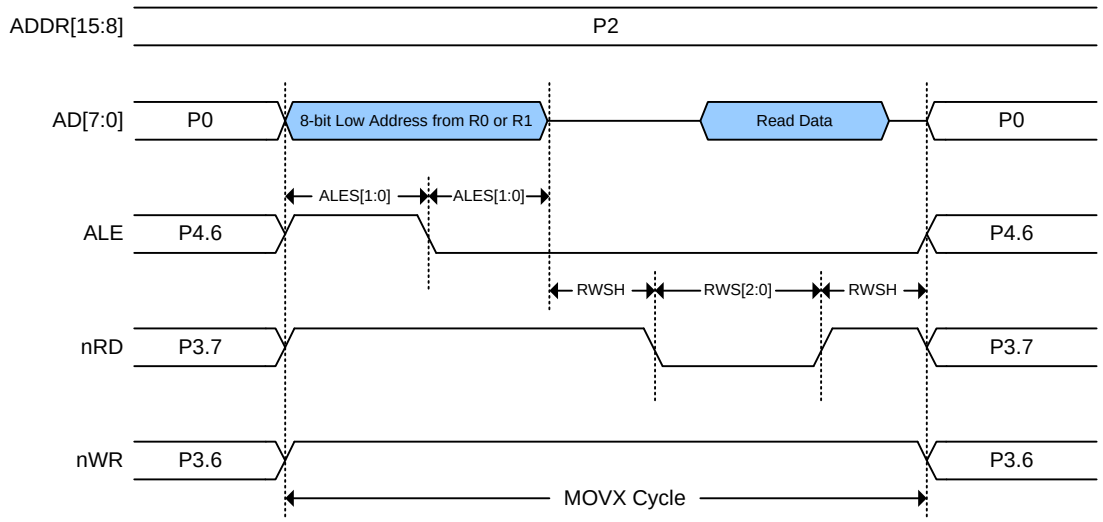

6.4.2. Multiplexed 8-bit Address Mode for MOVX 16-bit Data Access

Muxed 8-bit Address mode for 16-bit Data Write

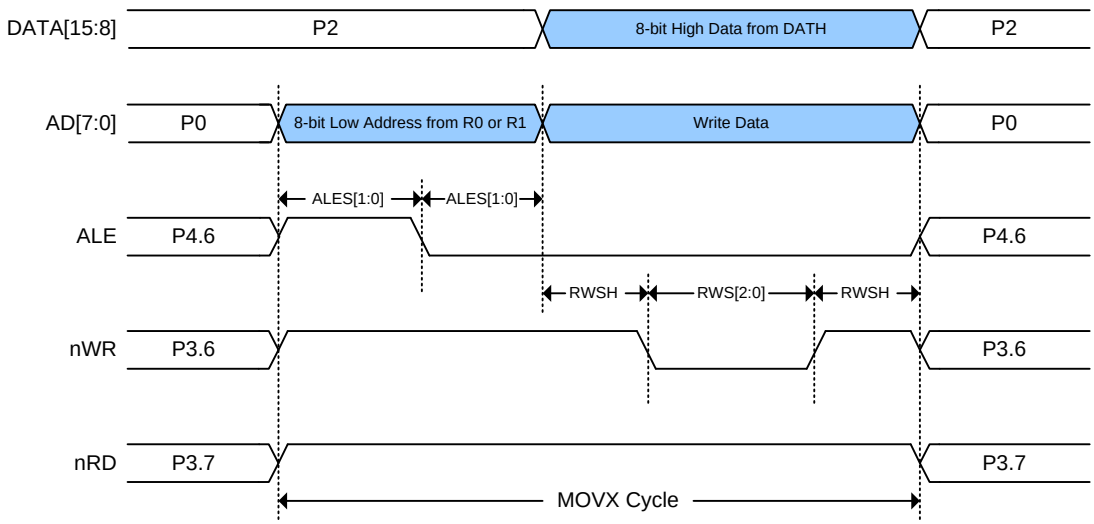

Muxed 8-bit Address mode for 16-bit Data Read

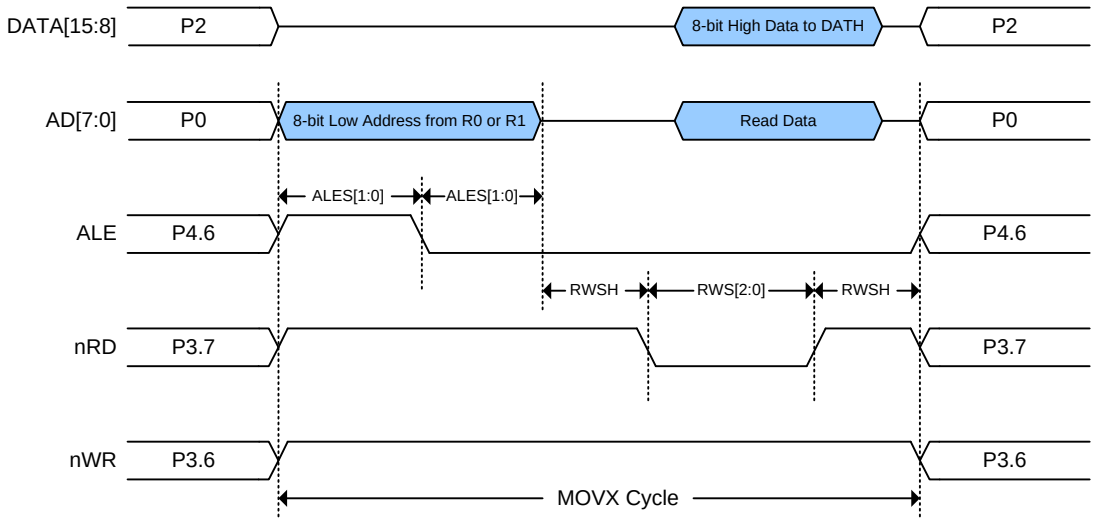

6.4.3. Multiplexed 16-bit Address Mode for MOVX 8-bit Data Access

Muxed 16-bit Address mode for 8-bit Data Write

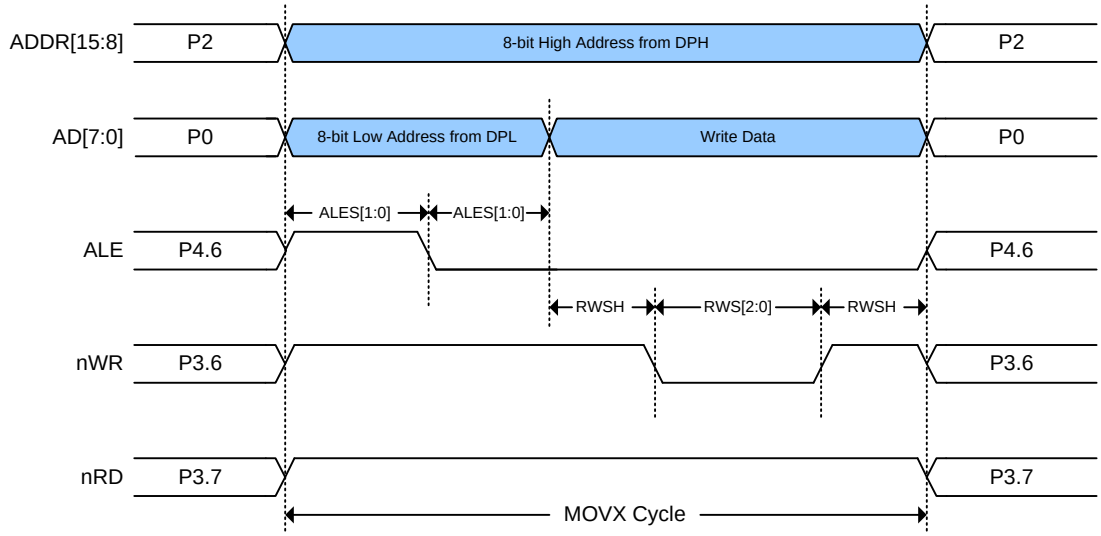

Muxed 16-bit Address mode for 8-bit Data Read

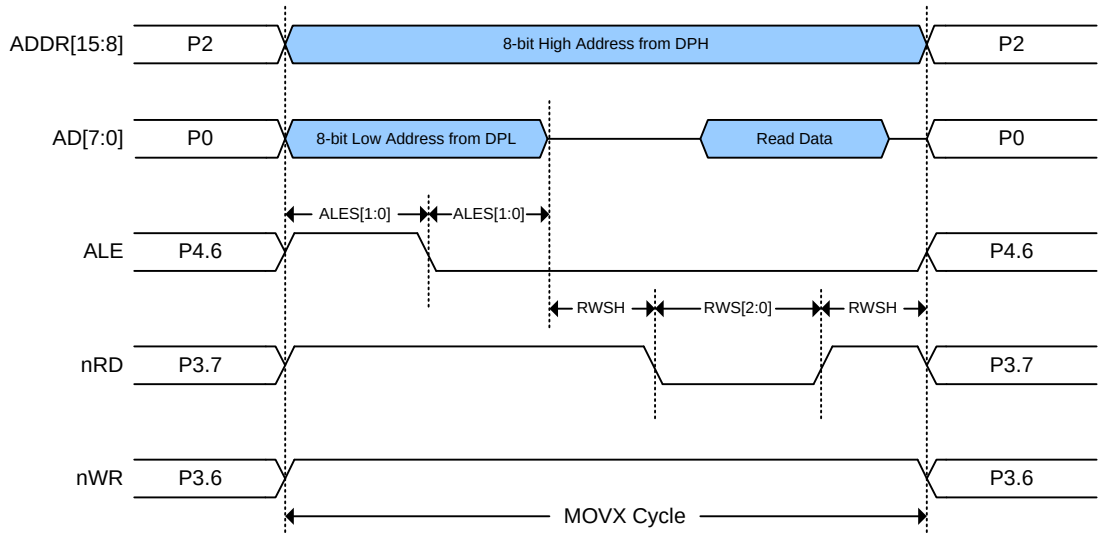

6.4.4. Multiplexed 16-bit Address Mode for MOVX 16-bit Data Access

Muxed 16-bit Address mode for 16-bit Data Write

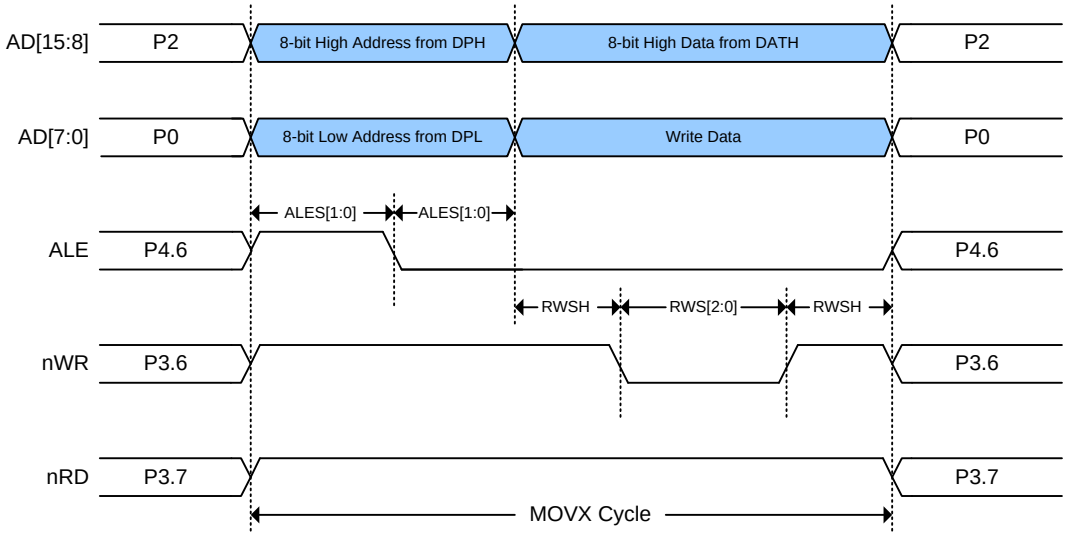

Muxed 16-bit Address mode for 16-bit Data Read

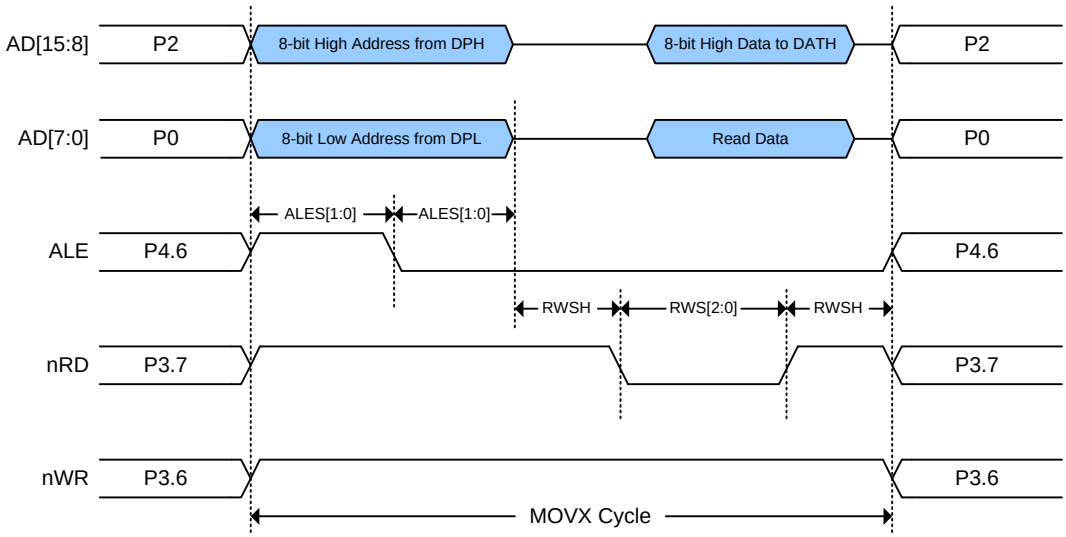

6.4.5. No Address Multiplexed Mode for MOVX 8-bit Data Access

No Address Phase mode for 8-bit Data Write

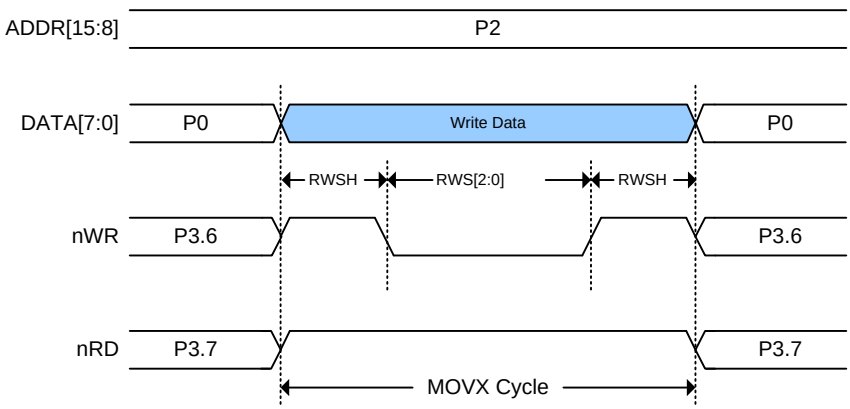

No Address Phase mode for 8-bit Data Read

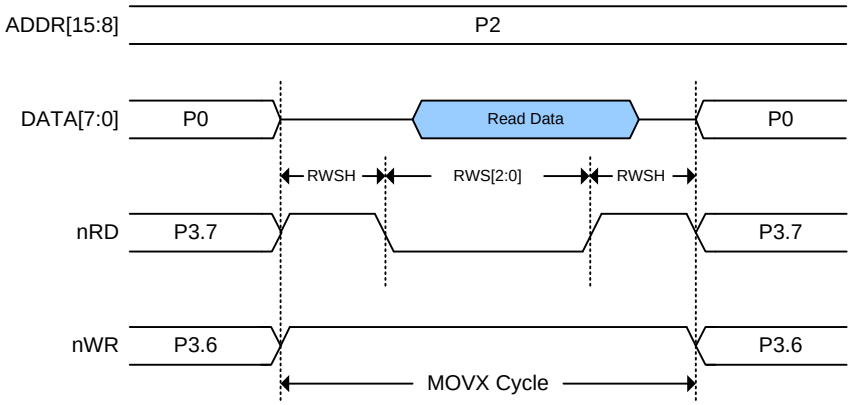

6.4.6. No Address Multiplexed Mode for MOVX 16-bit Data Access

No Address Phase mode for 16-bit Data Write

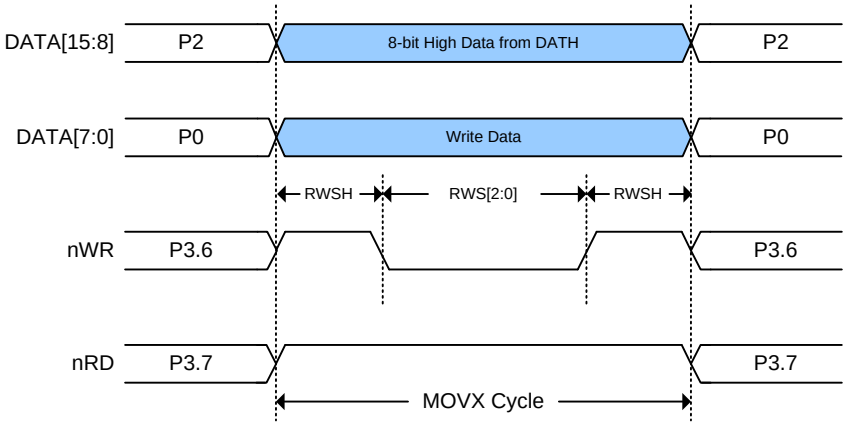

No Address Phase mode for 16-bit Data Read

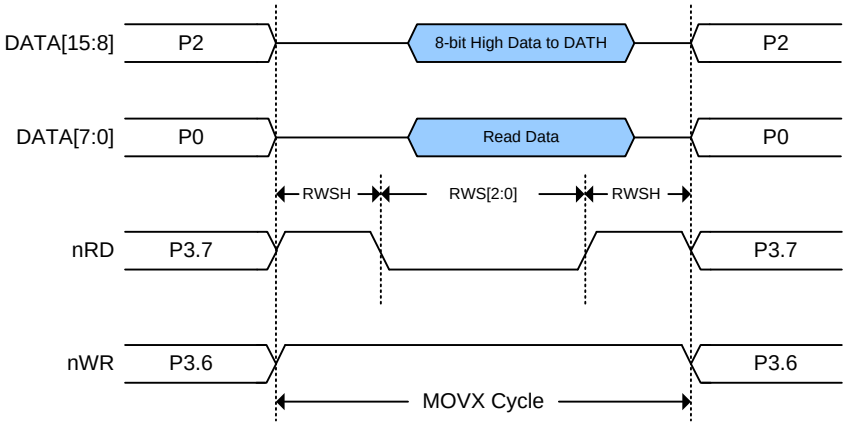

6.4.7. ADDRO Mode for MOVX 16-bit address Access

6.4.8. ADDRO Mode for MOVX 16-bit address Access

6.5. Declaration Identifiers in a C51-Compiler

The declaration identifiers in a C51-compiler for the various **MG82FG5C64** memory spaces are as follows:

data
128 bytes of internal data memory space (00h~7Fh); accessed via direct or indirect addressing, using instructions other than MOVX and MOVC. All or part of the Stack may be in this area.

idata
Indirect data; 256 bytes of internal data memory space (00h~FFh) accessed via indirect addressing using instructions other than MOVX and MOVC. All or part of the Stack may be in this area. This area includes the data area and the 128 bytes immediately above it.

sfr
Special Function Registers; CPU registers and peripheral control/status registers, accessible only via direct addressing.

xdata
External data or on-chip eXpanded RAM (XRAM); duplicates the classic 80C51 64KB memory space addressed via the “MOVX @DPTR” instruction. The **MG82FG5C64** has **3840** bytes of on-chip xdata memory.

pdata
Paged (256 bytes) external data or on-chip eXpanded RAM; duplicates the classic 80C51 256 bytes memory space addressed via the “MOVX @Ri” instruction. The **MG82FG5C64** has 256 bytes of on-chip pdata memory which is shared with on-chip xdata memory.

code
64K bytes of program memory space; accessed as part of program execution and via the “MOVC @A+DTPR” instruction. The **MG82FG5C64** has **64K** bytes of on-chip code memory.

7. Dual Data Pointer Register (DPTR)

The dual DPTR structure as shown in Figure 7–1 is a way by which the chip can specify the address of an external data memory location. There are two 16-bit DPTR registers that address the external memory, and a single bit called DPS (AUXR1.0) that allows the program code to switch between them.

Figure 7–1. Dual DPTR

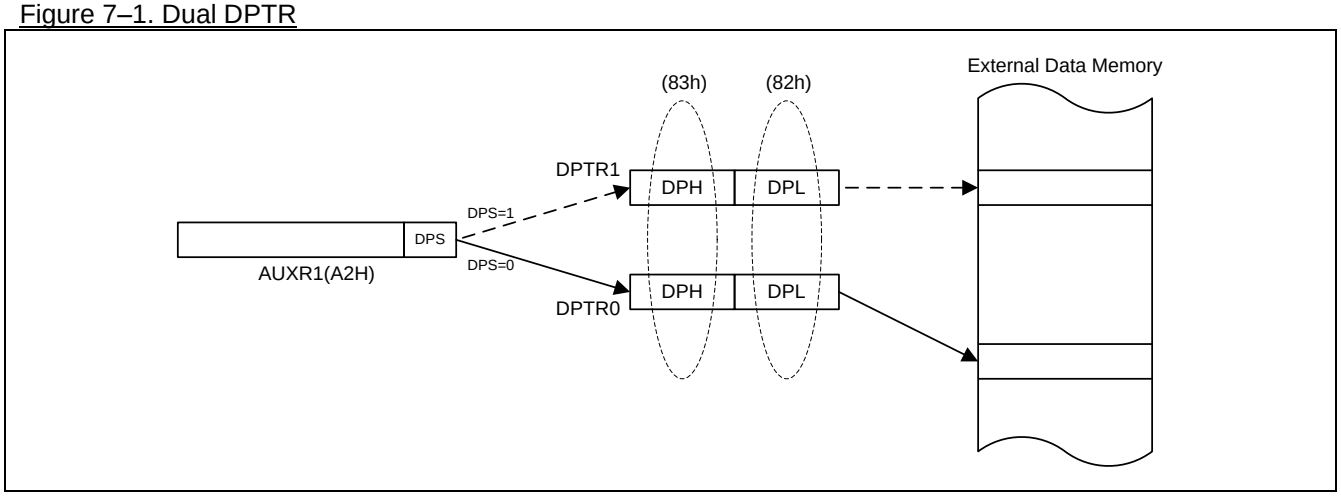

DPTR Instructions

The six instructions that refer to DPTR currently selected using the DPS bit are as follows:

```
INC  DPTR                ; Increments the data pointer by 1
MOV  DPTR,#data16        ; Loads the DPTR with a 16-bit constant
MOV  A,@A+DPTR           ; Move code byte relative to DPTR to ACC
MOVX A,@DPTR             ; Move external RAM (16-bit address) to ACC
MOVX @DPTR,A             ; Move ACC to external RAM (16-bit address)
JMP @A+DPTR              ; Jump indirect relative to DPTR
```

AUXR1: Auxiliary Control Register 1

SFR Page = 0~F

SFR Address = 0xA2 POR+RESET = 0000-0000

7	6	5	4	3	2	1	0
KBIPS1	KBIPS0	SPIPS0	S1PS1	S1PS0	T01PS0	EXTRAM	**DPS**
R/W	**R/W**	**R/W**	**R/W**	**R/W**	**R/W**	**R/W**	**R/W**

Bit 0: DPS, DPTR select bit. Use to switch between DPTR0 and DPTR1.
0: Select DPTR0.
1: Select DPTR1.

DPS	Selected DPTR
0	DPTR0
1	DPTR1

8. System Clock

There are four clock sources for the system clock: Internal High-frequency RC Oscillator (IHRCO), external crystal oscillator, Internal Low-frequency RC Oscillator (ILRCO) and External Clock Input. Figure 8–1 shows the structure of the system clock in **MG82FG5C64**.

The **MG82FG5C64** always boots from IHRCO on 12MHz and reserves crystal pads as P6.0/P6.1 GPIO function. Software can select the OSCin input on one of the four clock sources application required and switches them on the fly. But software needs to settle the clock source stably before clock switching. If software selects external crystal mode, port pin of P6.0 and P6.1 will be assigned to XTAL2 and XTAL1. And P6.0/P6.1 GPIO function will be inhibited. In external clock input mode (ECKI), the clock source comes from P6.0 input and P6.1 still reserves GPIO function.

After set XTALE (CKCON2.5) to enable external crystal oscillating, XTOR (CKCON1.7) will be set by hardware to indicate the crystal oscillating is stable for software to switch the OSCin on it. XTOR is read only. MCU must poll this bit before switching the crystal oscillator as system clock source.

The built-in IHRCO provides two kinds of frequency for software selected. Another frequency is 11.059MHz by software setting AFS on CKCON0.7. Both of 12MHz and 11.059 MHz in IHRCO provide high precision frequency for system clock source. To find the detailed IHRCO performance, please refer Section “34.4 IHRCO Characteristics”). In IHRCO or ILRCO mode, P6.0 can be configured to internal *MCK* output or *MCK*/2 and *MCK*/4 for system application.

The built-in ILRCO provides the low power and low speed frequency about 32KHz to WDT and system clock source. MCU can selects the ILRCO to system clock source by software for low power operation. To find the detailed IHRCO performance, please refer Section “34.5 ILRCO Characteristics”). In ILRCO mode, P6.0 can be configured to internal *MCK* output or *MCK*/2 and *MCK*/4 for system application.

The **MG82FG5C64** device includes a Clock Multiplier (CKM) to generate the high speed clock for system clock source. CKM applied in **MG82FG5C64** is shown in Figure 8–1 and its typical input frequency is around 6MHz. Before enable CKM, software must configure the CKMIS1~0 (CKCON.5~4) to get the reasonable CKMI frequency for CKM input source. CKM can generate 4/5.33/8 times frequency of CKMI and setting MCKS1~0 (CKCON2.3~2) selects different CKM outputs to provide the high speed operation on MCU without high-frequency clock source. To find the detailed CKM performance, please refer Section “34.6 CKM Characteristics”).

The system clock, *SYSCLK*, is obtained from one of these four clock sources through the clock divider, as shown in Figure 8–1. The user can program the divider control bits SCKS2~SCKS0 (in CKCON0 register) to get the desired system clock.

8.1. Clock Structure

Figure 8–1 presents the principal clock systems in the **MG82FG5C64**. The system clock can be sourced by the external oscillator circuit or either internal oscillator.

Figure 8–1. System Clock

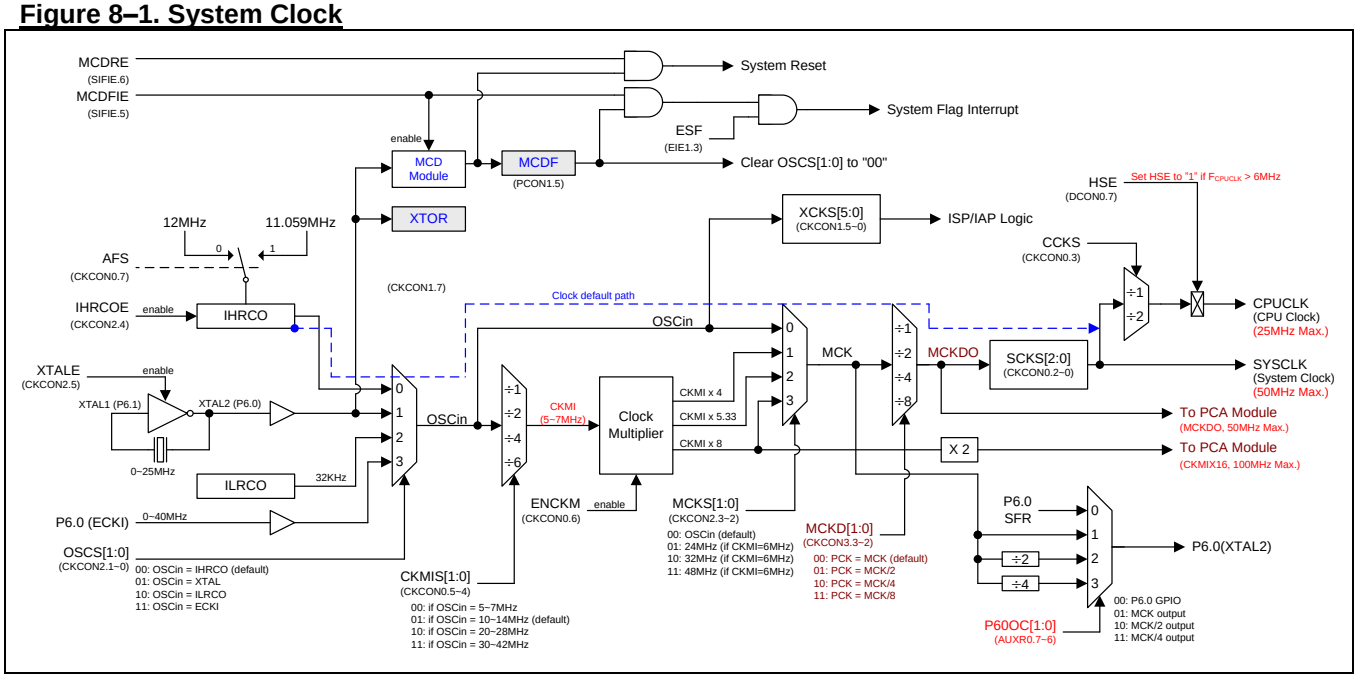

8.2. Clock Register

CKCON0: Clock Control Register 0

SFR Page = **0~F & P**

SFR Address = 0xC7 RESET = 0001-0000

7	6	5	4	3	2	1	0
AFS	ENCKM	CKMIS1	CKMIS0	CCKS	SCKS2	SCKS1	SCKS0
R/W	**R/W**	**R/W**	**R/W**	**R/W**	**R/W**	**R/W**	**R/W**

Bit 7: AFS, Alternated Frequency Selection.
0: Select IHRCO on 12MHz.
1: Select IHRCO on 11.059MHz.

Bit 6: ENCKM, Enable clock multiplier (X8)
0: Disable the X8 clock multiplier.
1: Enable the X8 clock multiplier.

Bit 5~4: CKMIS1 ~ CKMIS0, Clock Multiplier Input Selection.

CKMIS[1:0]	Clock Multiplier Input Selection
0 0	OSCin/1 (when OSCin = 5 ~ 7MHz)
0 1	OSCin/2 (when OSCin = 10 ~ 14MHz)
1 0	OSCin/4 (when OSCin = 20 ~ 28MHz)
1 1	OSCin/6 (when OSCin = 30 ~ 42MHz)

Bit 3: CCKS, CPU Clock Select.
0: Select CPU Clock as SYSCLK.
1: Select CPU Clock as SYSCLK/2.

Bit 2~0: SCKS2 ~ SCKS0, programmable System Clock Selection.

SCKS[2:0]	System Clock (SYSCLK)
0 0 0	MCKDO/1
0 0 1	MCKDO/2
0 1 0	MCKDO/4
0 1 1	MCKDO/8
1 0 0	MCKDO/16
1 0 1	MCKDO/32
1 1 0	MCKDO/64
1 1 1	MCKDO/128

CKCON1: Clock Control Register 1

SFR Page = **0~F & P**

SFR Address = 0xBF RESET = 0x00-1011

7	6	5	4	3	2	1	0
XTOR	--	XCKS5	XCKS4	XCKS3	XCKS2	XCKS1	XCKS0
R	**W**	**R/W**	**R/W**	**R/W**	**R/W**	**R/W**	**R/W**

Bit 7: XTOR, Crystal Oscillating Ready. Read Only.
0: Crystal Oscillating not Ready.
1: Crystal Oscillating Ready. When XTALE is enabled, XTOR reports the crystal oscillator reached start-up count.

Bit 6: Reserved. Software must write “0” on this bit when CKCON1 is written.

Bit 5~0: This is set the OSCin frequency value to define the time base of ISP/IAP programming. Fill with a proper value according to OSCin, as listed below.

[XCKS5~XCKS0] = OSCin – 1, w*here OSCin=1~40 (MHz).*

For examples,
(1) If OSCin=12MHz, then fill [XCKS5~XCKS0] with 11, i.e., 00-1011B.

(2) If OSCin=6MHz, then fill [XCKS5~XCKS0] with 5, i.e., 00-0101B.

OSCin	XCKS[5:0]
1MHz	00-0000
2MHz	00-0001
3MHz	00-0010
4MHz	00-0011
……	……
……	……
38MHz	10-0101
39MHz	10-0110
40MHz	10-0111

CKCON2: Clock Control Register 2

SFR Page = **P Only**

SFR Address = 0x40 RESET = 0101-0000

7	6	5	4	3	2	1	0
XTGS1	XTGS0	XTALE	IHRCOE	MCKS1	MCKS0	OSCS1	OSCS0
R/W	**R/W**	**R/W**	**R/W**	**R/W**	**R/W**	**R/W**	**R/W**

Bit 7~6: XTGS1~XTGS0, OSC Driving control Register.

XTGS1, XTGS0	Gain Define
0, 0	Gain for 32.768K
0, 1	Gain for 2MHz ~ 25MHz
Others	Reserved

Bit 5: XTALE, external Crystal(XTAL) Enable.
0: Disable XTAL oscillating circuit. In this case, XTAL2 and XTAL1 behave as Port 6.0 and Port 6.1.
1: Enable XTAL oscillating circuit. If this bit is set by CPU software, software polls the **XTOR** (CKCON1.7) **true** to indicate the crystal oscillator is ready for OSCin clock selected.

Bit 4: IHRCOE, Internal High frequency RC Oscillator Enable.
0: Disable internal high frequency RC oscillator.
1: Enable internal high frequency RC oscillator. If this bit is set by CPU software, it needs **32 us** to have stable output after IHRCOE is enabled.

Bit 3~2: MCKS[1:0], MCK Source Selection.

MCKS[1:0]	MCK Source Selection	OSCin =12MHz CKMIS = [01]	OSCin =11.059MHz CKMIS = [01]
0 0	OSCin	12MHz	11.059MHz
0 1	CKMI x 4 (ENCKM =1)	24MHz	22.118MHz
1 0	CKMI x 5.33 (ENCKM =1)	32MHz	29.491MHz
1 1	CKMI x 8 (ENCKM =1)	48MHz	44.236MHz

Bit 1~0: OSCS[1:0], OSCin Source selection.

OSCS[1:0]	OSCin source Selection
0 0	IHRCO
0 1	XTAL
1 0	ILRCO
1 1	ECKI, External Clock Input (P6.0) as OSCin.

CKCON3: Clock Control Register 3

SFR Page = P only

SFR Address = 0x41 RESET = 0000-0010

7	6	5	4	3	2	1	0

WDTCS1	WDTCS0	FWKP	--	MCKD1	MCKD0	MCDS1	MCDS0
R/W	**R/W**	**R/W**	**W**	**R/W**	**R/W**	**R/W**	**R/W**

AUXR0: Auxiliary Register 0

SFR Page = 0~F

SFR Address = 0xA1 RESET = 0000-0000

7	6	5	4	3	2	1	0
P60OC1	P60OC0	P60FD	T0XL	P4FS1	P4FS0	INT1H	INT0H
R/W	**R/W**	**R/W**	**R/W**	**R/W**	**R/W**	**R/W**	**R/W**

Bit 7~6: P6.0 function configured control bit 1 and 0. The two bits only act when internal RC oscillator (IHRCO or ILRCO) is selected for system clock source. In crystal mode, XTAL2 and XTAL1 are the alternated function of P6.0 and P6.1. In external clock input mode, P6.0 is the dedicated clock input pin. In internal oscillator condition, P6.0 provides the following selections for GPIO or clock source generator. When P60OC[1:0] index to non-P6.0 GPIO function, P6.0 will drive the on-chip RC oscillator output to provide the clock source for other devices.

P60OC[1:0]	P60 function	I/O mode
00	P60	By P6M0.0
01	MCK	By P6M0.0
10	MCK/2	By P6M0.0
11	MCK/4	By P6M0.0

For clock-out on P6.0 function, it is recommended to set P6M0.0 to “1” which selects P6.0 as push-push output mode.

Bit 5: P60FD, P6.0 Fast Driving.
0: P6.0 output with default driving.
1: P6.0 output with fast driving enabled. If P6.0 is configured to clock output, enable this bit when P6.0 output frequency is more than 12MHz at 5V application or more than 6MHz at 3V application.

DCON0: Device Control Register 0

SFR Page = **P Only**

SFR Address = 0x4C POR = 0000-x011

7	6	5	4	3	2	1	0
HSE	IAPO	--	--	--	IORCTL	RSTIO	OCDE
R/W	**R/W**	**W**	**W**	**W**	**R/W**	**R/W**	**R/W**

Bit 7: HSE, High Speed operation Enable.
0: Select MCU running in low speed mode which is slow down internal circuit to reduce power consumption.
1: Enable MCU full speed operation if F_{SYSCLK} > 24MHz. Before select high frequency clock (>24MHz) on SYSCLK, software must set HSE to switch internal circuit for high speed operation.

9. Watch Dog Timer (WDT)

9.1. WDT Structure

The Watch-dog Timer (WDT) is intended as a recovery method in situations where the CPU may be subjected to software upset. The WDT consists of a 9-bit free-running counter, a 7-bit prescaler and a control register (WDTCR). Figure 9–1 shows the WDT structure in **MG82FG5C64**.

When WDT is enabled, it derives its time base from the 32KHz ILRCO. The WDT overflow will set the WDTF on PCON1.0 which can be configured to generate an interrupt by enabled WDTFIE (SFIE.0) and enabled ESF (EIE1.3). The overflow can also trigger a system reset when WREN (WDTCR.7) is set. To prevent WDT overflow, software needs to clear it by writing "1" to the CLRW bit (WDTCR.4) before WDT overflows.

Once the WDT is enabled by setting ENW bit, there is no way to disable it except through power-on reset or page-p SFR over-write on ENW, which will clear the ENW bit. The WDTCR register will keep the previous programmed value unchanged after hardware (RST-pin) reset, software reset and WDT reset.

WREN, NSW and ENW are implemented to one-time-enabled function, only writing "1" valid in general SFR page. Page-P SFR Access on WDTCR can disable WREN, NSW and ENW, writing "0" on WDTCR.7~5. Please refer Section "9.3 WDT Register" and Section "30 Page P SFR Access" for more detail information.

Figure 9–1. Watch Dog Timer

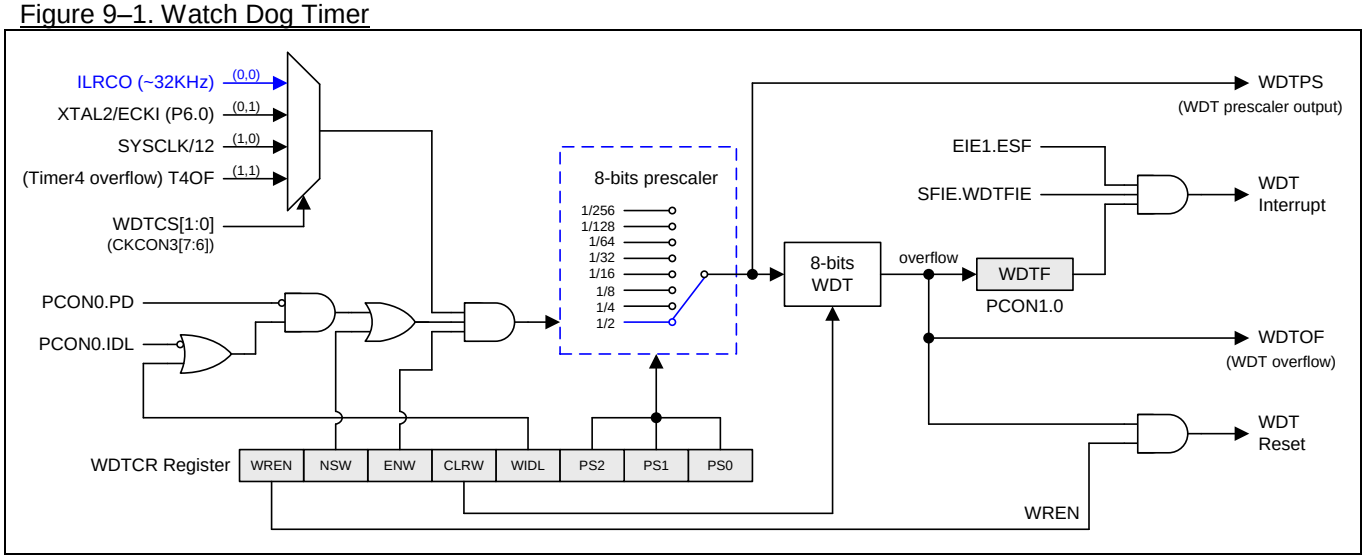

9.2. WDT During Idle and Power Down

In the Idle mode, the WIDL bit (WDTCR.3) determines whether WDT counts or not. Set this bit to let WDT keep counting in the Idle mode. If the hardware option NSWDT is enabled, the WDT always keeps counting regardless of WIDL bit.

In the Power down mode, the ILRCO won't stop if the NSW (WDTCR.6) is enabled. The MUC enters Watch mode. That lets WDT keep counting even in Power down mode (Watch Mode). After WDT overflows, it will wake up the CPU from interrupt or reset by software configured.

9.3. WDT Register

WDTCR: Watch-Dog-Timer Control Register

SFR Page = 0~F & P

SFR Address = 0xE1 POR = XXX0-XXXX (0000-0111)

7	6	5	4	3	2	1	0
WREN	**NSW**	ENW	CLRW	WIDL	PS2	PS1	PS0
R/W	**R/W**	**R/W**	**R/W**	**R/W**	**R/W**	**R/W**	**R/W**

Bit 7: WREN, WDT Reset Enable. The initial value can be changed by hardware option, WRENO.
0: The overflow of WDT does not set the WDT reset. The WDT overflow flag, WDTF, may be polled by software or trigger an interrupt.
1: The overflow of WDT will cause a system reset. Once WREN has been set, it can not be cleared by software in page 0~F. **In page P, software can modify it to "0" or "1".**

Bit 6: NSW. Non-Stopped WDT. The initial value can be changed by hardware option, NSWDT.
0: WDT stop counting while the MCU is in power-down mode.
1: WDT always keeps counting while the MCU is in power-down mode (Watch Mode) or idle mode. Once NSW has been set, it can not be cleared by software in page 0~F. **In page P, software can modify it to "0" or "1".**

Bit 5: ENW. Enable WDT.
0: Disable WDT running. This bit is only cleared by POR.
1: Enable WDT while it is set. Once ENW has been set, it can not be cleared by software in page 0~F. **In Page P, software can modify it as "0" or "1".**

Bit 4: CLRW. WDT clear bit.
0: Writing "0" to this bit is no operation in WDT.
1: Writing "1" to this bit will clear the 9-bit WDT counter to 000H. Note this bit has no need to be cleared by writing "0".Clear WDT to recount while it is set.

Bit 3: WIDL. WDT idle control.
0: WDT stops counting while the MCU is in idle mode.
1: WDT keeps counting while the MCU is in idle mode.

Bit 2~0: PS2 ~ PS0, select prescaler output for WDT time base input.

PS[2:0]	Prescaler Value	WDT Period (ILRCO)
0 0 0	1	15 ms
0 0 1	2	31 ms
0 1 0	4	62 ms
0 1 1	8	124 ms
1 0 0	16	248 ms
1 0 1	32	496 ms
1 1 0	64	992 ms
1 1 1	128	1.984 S

CKCON3: Clock Control Register 3

SFR Page = P only

SFR Address = 0x41 RESET = 0000-0010

7	6	5	4	3	2	1	0
WDTCS1	**WDTCS0**	FWKP	--	MCKD1	MCKD0	MCDS1	MCDS0
R/W	**R/W**	**R/W**	**W**	**R/W**	**R/W**	**R/W**	**R/W**

Bit 7~6: WDTCS1~0. WDT Clock source Selection.

WDTCS1~0	WDT Clock Source
00	ILRCO
01	XTAL2/ECKI (P6.0)
10	SYSCLK/12
11	T4OF

	(Timer 4 overflow)

PCON1: Power Control Register 1

SFR Page = 0~F & P

SFR Address = 0x97 POR = 0000-x000

7	6	5	4	3	2	1	0
SWRF	EXRF	MCDF	RTCF	--	BOF1	BOF0	**WDTF**
R/W	**R/W**	**R/W**	**R/W**	**W**	**R/W**	**R/W**	**R/W**

Bit 1: WDTF, WDT overflow flag.
0: This bit must be cleared by software writing **"1"** on it. Software writing ":0" is no operation.
1: This bit is only set by hardware when WDT overflows. Writing **"1"** on this bit will clear WDTF.

SFIE: System Flag Interrupt Enable Register

SFR Page = 0~F

SFR Address = 0x8E POR = 0110-x000

7	6	5	4	3	2	1	0
SIDFIE	MCDRE	MCDFIE	RTCFIE	--	BOF1IE	BOF0IE	**WDTFIE**
R/W	**R/W**	**R/W**	**R/W**	**W**	**R/W**	**R/W**	**R/W**

Bit 0: WDTFIE, Enable WDTF (PCON1.0) Interrupt.
0: Disable WDTF interrupt.
1: Enable WDTF interrupt.

9.4. WDT Hardware Option

In addition to being initialized by software, the WDTCR register can also be automatically initialized at power-up by the hardware options WRENO, NSWDT, HWENW, HWWIDL and HWPS[2:0], which should be programmed by a universal Writer or Programmer, as described below.

If HWENW is programmed to "enabled", then hardware will automatically do the following initialization for the WDTCR register at power-up: (1) set ENW bit, (2) load WRENO into WREN bit, (3) load NSWDT into NSW bit, (4) load HWWIDL into WIDL bit, and (5) load HWPS[2:0] into PS[2:0] bits.

If both of HWENW and WDSFWP are programmed to "enabled", hardware still initializes the WDTCR register content by WDT hardware option at power-up. Then, any CPU writing on WDTCR bits will be inhibited except writing "1" on WDTCR.4 (CLRW), clear WDT, even though access through Page-P SFR mechanism.

WRENO:
☑: Enabled. Set WDTCR.WREN to enable a system reset function by WDTF.
☐: Disabled. Clear WDTCR.WREN to disable the system reset function by WDTF.

NSWDT: Non-Stopped WDT
☑: Enabled. Set WDTCR.NSW to enable the WDT running in power down mode (watch mode).
☐: Disabled. Clear WDTCR.NSW to disable the WDT running in power down mode (disable Watch mode).

HWENW: Hardware loaded for "ENW" of WDTCR.
☑: Enabled. Enable WDT and load the content of WRENO, NSWDT, HWWIDL and HWPS2~0 to WDTCR after power-on.
☐: Disabled. WDT is not enabled automatically after power-on.

HWWIDL, HWPS2, HWPS1, HWPS0:
When HWENW is enabled, the content on these four fused bits will be loaded to WDTCR SFR after power-on.

WDSFWP:
☑: Enabled. The WDT SFRs, WREN, NSW, WIDL, PS2, PS1 and PS0 in WDTCR, will be write-protected.

□: Disabled. The WDT SFRs, WREN, NSW, WIDL, PS2, PS1 and PS0 in WDTCR, are free for writing of software.

10. Real-Time-Clock(RTC)/System-Timer

10.1. RTC Structure

The **MG82FG5C64** has a simple Real-Time clock that allows a user to continue running an accurate timer while the rest of the device is powered-down. The Real-Time clock can be a wake-up or an interrupt source. The Real-Time clock is a 21-bit up counter comprised of a 14/15-bit prescaler and a 6-bit loadable up counter. When it overflows, the counter will be reloaded again and the RTCF flag will be set. The clock source for this prescaler can be either the system clock (SYSCLK) or the XTAL oscillator, provided that the XTAL oscillator is not being used as the system clock. Figure 10–1 shows the RTC structure in **MG82FG5C64**.

The 32.768KHz crystal for the RTC module input will provide a programmable overflow period for 0.5S to 64S. The counter also provides a timer function with the clock derived from SYSCLK/12 or SYSCLK/2^15 for a short timer function or a long system timer function. The maximum overflow period for the system timer function is SYSCLK/2^21.

If the XTAL oscillator is used as the system clock, then the RTC still uses P6.0 input as its clock source. Only power-on reset will reset the Real-Time clock and its associated SFRs to the default state.

Figure 10–1. Real-Time-Clock Counter

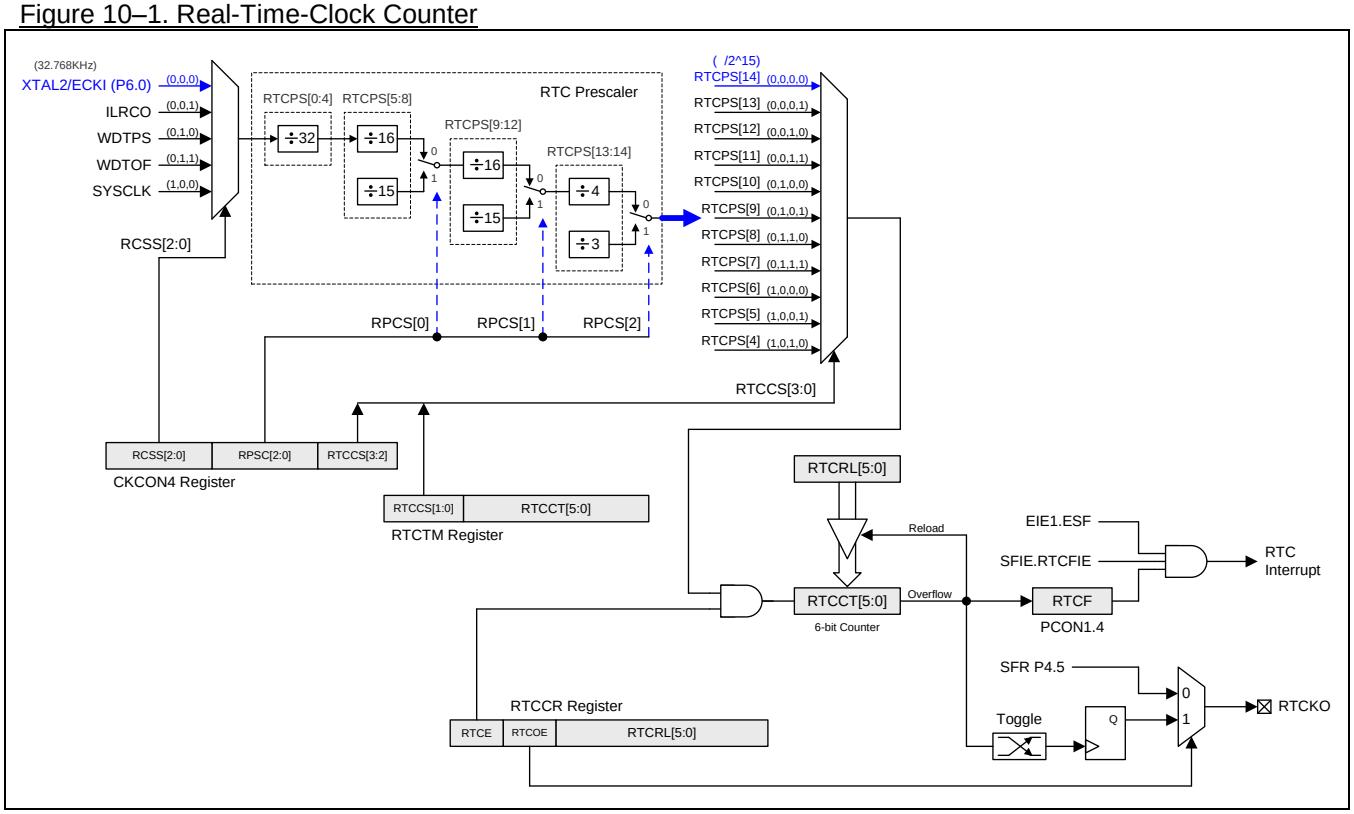

10.2. RTC Register

RTCCR: Real-Time-Clock Control Register

SFR Page = 0~F & P

SFR Address = 0xBE POR = 0011-1111

7	6	5	4	3	2	1	0
RTCE	RTCOE	RTCRL.5	RTCRL.4	RTCRL.3	RTCRL.2	RTCRL.1	RTCRL.0
R/W	R/W	R/W	R/W	R/W	R/W	R/W	R/W

Bit 7: RTCE, RTC Enable.
0: Stop RTC Counter, RTCCT.
1: Enable RTC Counter and set RTCF when RTCCT overflows. When RTCE is set, CPU cannot access RTCTM. RTCTM must be accessed in RTCE cleared.

Bit 6: RTCOE, RTC Output Enabled. The frequency of RTCKO is (RTC overflow rate)/2.
0: Disable the RTCKO output.
1: Enable the RTCKO output on P4.5.

Bit 5~0: RTCRL[5:0], RTC counter reload value register. This register is accessed by CPU and the content in the register is reloaded to RTCCT when RTCCT overflows.

RTCTM: Real-Time-Clock Timer Register

SFR Page = 0~F

SFR Address = 0xB6 POR = 0111-1111

7	6	5	4	3	2	1	0
RTCCS.1	RTCCS.0	RTCCT.5	RTCCT.4	RTCCT.3	RTCCT.2	RTCCT.1	RTCCT.0
R/W	R/W	R/W	R/W	R/W	R/W	R/W	R/W

Bit 7~6: RTCCS.1~0, RTC Clock Selection. Default is “01”.

RTCCS.3~0	Clock Source	RTC Interrupt Duration	Min. Step
0 0 0 0	P6.0/2^15	1S ~ 64S when P6.0 = 32768Hz	1S
0 0 0 1	P6.0/2^14	0.5S ~ 32S when P6.0 = 32768Hz	0.5S
0 0 1 0	P6.0/2^13	0.25S ~ 16S when P6.0 = 32768Hz	0.25S
……	……	……	……
1 0 1 0	SYSCLK/2^5	9.765ms ~ 62.496ms when P6.0 = 32768Hz	9.765ms
Others	Reserved		

Bit 5~0: RTCCT[5:0], RTC counter register. It is a counter for RTC function or System Timer function by different clock source selection on RTCCS[1:0]. When the counter overflows, it sets the RTCF flag which shares the system flag interrupt when RTCFIE is enabled. The maximum RTC overflow period is 64 seconds.

CKCON4: Clock Control Register 4

SFR Page = P only

SFR Address = 0x42 POR = 0000-0000

7	6	5	4	3	2	1	0
RCCS2	RCCS1	RCCS0	RPCS2	RPCS1	RPCS0	RTCCS3	RTCCS2
R/W	R/W	R/W	R/W	R/W	R/W	R/W	R/W

PCON1: Power Control Register 1

SFR Page = 0~F & P

SFR Address = 0x97 POR = 0000-x000

7	6	5	4	3	2	1	0
SWRF	EXRF	MCDF	RTCF	--	BOF1	BOF0	WDTF

R/W	R/W	R/W	R/W	W	R/W	R/W	R/W

Bit 4: RTCF, RTC overflow flag.
0: This bit must be cleared by software writing **"1"** on it. Software writing ":0" is no operation.
1: This bit is only set by hardware when RTCCT overflows. Writing **"1"** on this bit will clear RTCF.

SFIE: System Flag Interrupt Enable Register

SFR Page = 0~F
SFR Address = 0x8E POR = 0110-x000

7	6	5	4	3	2	1	0
SIDFIE	MCDRE	MCDFIE	RTCFIE	--	BOF1IE	BOF0IE	WDTFIE
R/W	**R/W**	**R/W**	**R/W**	**W**	**R/W**	**R/W**	**R/W**

Bit 4: RTCFIE, Enable RTCF (PCON1.4) Interrupt.
0: Disable RTCF interrupt.
1: Enable RTCF interrupt. If enabled, RTCF will wake up CPU in Idle mode or power-down mode.

11. System Reset

During reset, all I/O Registers are set to their initial values, and the program starts execution from the Reset Vector, 0000H, or ISP start address by OR setting. The **MG82FG5C64** has eight sources of reset: power-on reset, external reset, software reset, illegal address reset, brown-out reset 0, brown-out reset 1 WDT reset and Missing-Clock-Detection reset. Figure 11–1 shows the system reset source in **MG82FG5C64**.

The following sections describe the reset happened source and corresponding control registers and indicating flags.

11.1. Reset Source

Figure 11–1 presents the reset systems in the **MG82FG5C64** and all of its reset sources.

Figure 11–1. System Reset Source

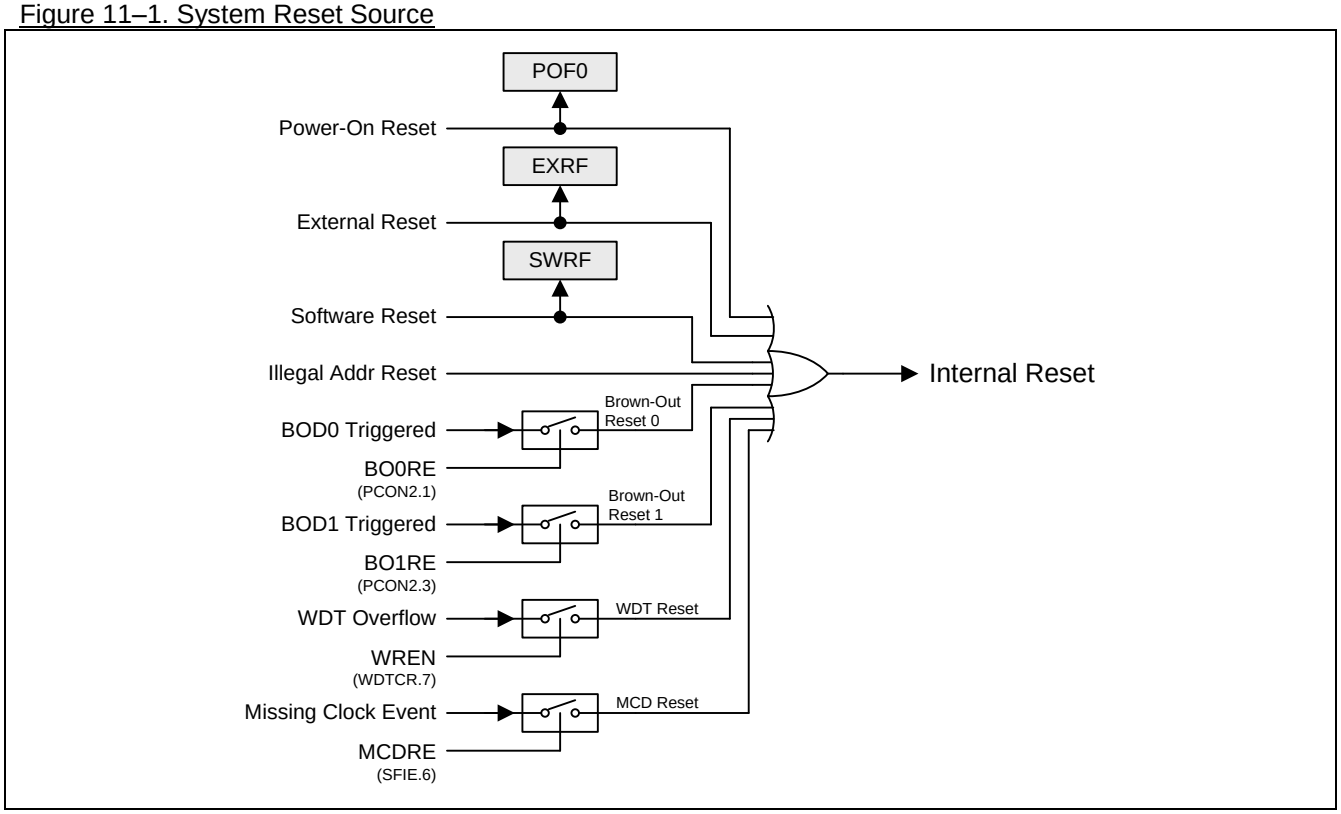

11.2. Power-On Reset

Power-on reset (POR) is used to internally reset the CPU during power-up. The CPU will keep in reset state and will not start to work until the VDD power rises above the voltage of Power-On Reset. And, the reset state is activated again whenever the VDD power falls below the POR voltage. During a power cycle, VDD must fall below the POR voltage before power is reapplied in order to ensure a power-on reset

PCON0: Power Control Register 0

SFR Page = 0~F & P

SFR Address = 0x87 POR = 0001-0000, RESET = 000X-0000

7	6	5	4	3	2	1	0
SMOD1	SMOD0	GF	**POF0**	GF1	GF0	PD	IDL
R/W	**R/W**	**R/W**	**R/W**	**R/W**	**R/W**	**R/W**	**R/W**

Bit 4: POF0, Power-On Flag 0.
0: The flag must be cleared by software to recognize next reset type.
1: Set by hardware when VDD rises from 0 to its nominal voltage. POF0 can also be set by software.

The Power-on Flag, POF0, is set to “1” by hardware during power up or when VDD power drops below the POR voltage. It can be clear by firmware and is not affected by any warm reset such as external reset, Brown-Out reset, software reset (ISPCR.5) and WDT reset. It helps users to check if the running of the CPU begins from power up or not. Note that the POF0 must be cleared by firmware.

11.3. External Reset

A reset is accomplished by holding the RESET pin HIGH for at least 24 oscillator periods while the oscillator is running. To ensure a reliable power-up reset, the hardware reset from RST pin is necessary.

PCON1: Power Control Register 1

SFR Page = 0~F & P
SFR Address = 0x97 POR = 0000-x000

7	6	5	4	3	2	1	0
SWRF	**EXRF**	MCDF	RTCF	--	BOF1	BOF0	WDTF
R/W	**R/W**	**R/W**	**R/W**	**W**	**R/W**	**R/W**	**R/W**

Bit 6: EXRF, External Reset Flag.
0: This bit must be cleared by software writing **“1”** on it. Software writing “:0” is no operation.
1: This bit is only set by hardware if an External Reset occurs. Writing **“1”** on this bit will clear EXRF.

11.4. Software Reset

Software can trigger the CPU to restart by software reset, writing “1” on SWRST (ISPCR.5), and set the SWRF flag (PCON1.7). SWBS decides the CPU is boot from ISP or AP region after the reset action

ISPCR: ISP Control Register

SFR Page = 0~F
SFR Address = 0xE7 POR+RESET = 0000-XXXX

7	6	5	4	3	2	1	0
ISPEN	**SWBS**	**SWRST**	CFAIL	--	--	--	--
R/W	**R/W**	**R/W**	**R/W**	**W**	**W**	**W**	**W**

Bit 6: SWBS, software boot selection control.
0: Boot from AP-memory after reset.
1: Boot from ISP memory after reset.

Bit 5: SWRST, software reset trigger control.
0: Write “0” is no operation
1: Write “1” to generate software system reset. It will be cleared by hardware automatically.

PCON1: Power Control Register 1

SFR Page = 0~F & P
SFR Address = 0x97 POR = 0000-x000

7	6	5	4	3	2	1	0
SWRF	EXRF	MCDF	RTCF	--	BOF1	BOF0	WDTF
R/W	**R/W**	**R/W**	**R/W**	**W**	**R/W**	**R/W**	**R/W**

Bit 7: SWRF, Software Reset Flag.
0: This bit must be cleared by software writing “1” on it. Software writing “0” is no operation.
1: This bit is only set by hardware if a Software Reset occurs. Writing “1” on this bit will clear SWRF.

11.5. Brown-Out Reset

In **MG82FG5C64**, there are two Brown-Out Detectors (BOD0 & BOD1) to monitor VDD power. BOD0 services the fixed detection level at VDD=1.7V. BOD1 detects the VDD level by software selecting 4.2V, 3.7V, 2.4V or 2.0V. If VDD power drops below BOD0 or BOD1 monitor level. Associated flag, BOF0 and BOF1, is set. If BO0RE (PCON2.1) is enabled, BOF0 indicates a BOD0 Reset occurred. If BO1RE (PCON2.3) is enabled, BOF1 indicates a BOD1 Reset occurred.

PCON1: Power Control Register 1

SFR Page = 0~F & P

SFR Address = 0x97 POR = 0000-x000

7	6	5	4	3	2	1	0
SWRF	EXRF	MCDF	RTCF	--	**BOF1**	**BOF0**	WDTF
R/W	**R/W**	**R/W**	**R/W**	**W**	**R/W**	**R/W**	**R/W**

Bit 2: BOF1, BOF1 (Reset) Flag.
0: This bit must be cleared by software writing **"1"** on it. Software writing ":0" is no operation.
1: This bit is only set by hardware when VDD meets BOD1 monitored level. Writing **"1"** on this bit will clear BOF1. If BO1RE (PCON2.3) is enabled, BOF1 indicates a BOD1 Reset occurred.

Bit 1: BOF0, BOF0 (Reset) Flag.
0: This bit must be cleared by software writing **"1"** on it. Software writing ":0" is no operation.
1: This bit is only set by hardware when VDD meets BOD0 monitored level. Writing **"1"** on this bit will clear BOF0. If BO0RE (PCON2.1) is enabled, BOF0 indicates a BOD0 Reset occurred.

11.6. WDT Reset

When WDT is enabled to start the counter, WDTF will be set by WDT overflow. If WREN (WDTCR.7) is enabled, the WDT overflow will trigger a system reset that causes CPU to restart. Software can read the WDTF to recognize the WDT reset occurred.

PCON1: Power Control Register 1

SFR Page = 0~F & P

SFR Address = 0x97 POR = 0000-x000

7	6	5	4	3	2	1	0
SWRF	EXRF	MCDF	RTCF	--	BOF1	BOF0	**WDTF**
R/W	**R/W**	**R/W**	**R/W**	**W**	**R/W**	**R/W**	**R/W**

Bit 0: WDTF, WDT Overflow/Reset Flag.
0: This bit must be cleared by software writing **"1"** on it. Software writing ":0" is no operation.
1: This bit is only set by hardware when WDT overflows. Writing **"1"** on this bit will clear WDTF. If WREN (WDTCR.7) is set, WDTF indicates a WDT Reset occurred.

11.7. Illegal Address Reset

In **MG82FG5C64**, if software program runs to illegal address such as over program ROM limitation, it triggers a RESET to CPU and set a flag, IARF in PCON1.

12. Power Management

The **MG82FG5C64** supports two power monitor modules, Brown-Out Detector 0 (BOD0) and Brown-Out Detector 1 (BOD1), and 6 power-reducing modes: Idle mode, Power-down mode, Slow mode, Sub-Clock mode, Watch mode and Monitor mode.

BOD0 and BOD1 report the chip power status on the flags, BOF0 and BOF1, which provide the capability to interrupt CPU or to reset CPU by software configured. The six power-reducing modes provide the different power-saving scheme for chip application. These modes are accessed through the CKCON0, CKCON2, PCON0, PCON1, PCON2, PCON3 and WDTCR register.

12.1. Brown-Out Detector

In **MG82FG5C64**, there are two Brown-Out Detectors (BOD0 & BOD1) to monitor VDD power. Figure 12–1 shows the functional diagram of BOD0 and BOD1. BOD0 services the fixed detection level at VDD=1.7V and BOD1 detects the software selection levels (4.2V/3.7V/2.4V/2.0V) on VDD. Associated flag, BOF0 (PCON1.1), is set when BOD0 meets the detection level. If both of ESF (EIE1.3) and BOF0IE (SFIE.1) are enabled, a set BOF0 will generate a system flag interrupt. It can interrupt CPU either CPU in normal mode or idle mode. The BOD1 has the same flag function, BOF1, and same interrupt function. The BOD1 interrupt also wakes up CPU in power down mode if AWBOD1 (PCON2.7) is enabled.

If BO0RE (PCON2.1) is enabled, the BOD0 event will trigger a system reset and set BOF0 to indicate a BOD0 Reset occurred. The BOD0 reset restart the CPU either CPU in normal mode or idle mode. BOD1 also has the same reset capability with associated control bit, BO1RE (PCON2.3). The BOD1 reset also restart CPU in power down mode if AWBOD1 (PCON2.7) is enabled in BOD1 reset operation.

To reduce power consumption, software may clear EBOD1 (PCON2.2) to disable BOD1 if the BOD1 is not applied in user application.

Figure 12–1. Brown-Out Detector 0/1

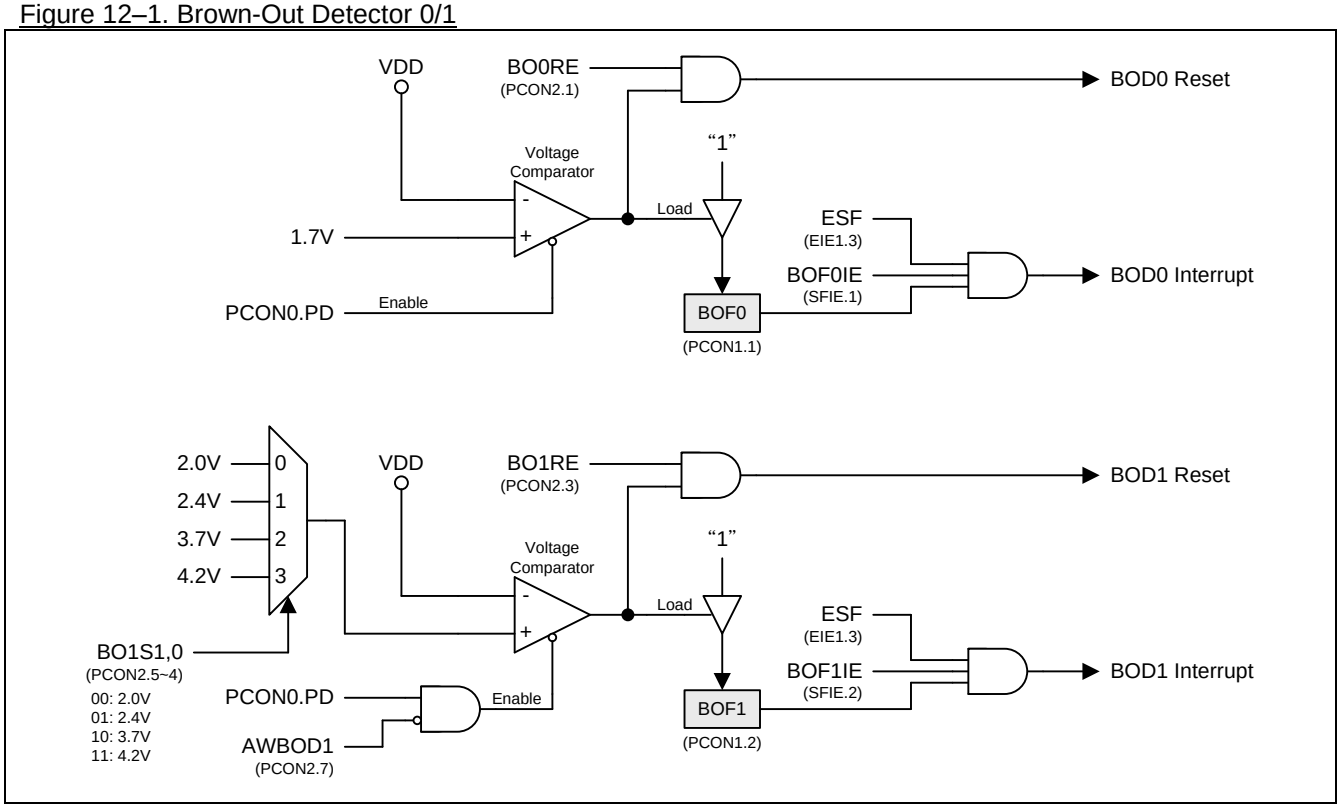

12.2. Power Saving Mode

12.2.1. Slow Mode

The alternative to save the operating power is to slow the MCU's operating speed by programming SCKS2~SCKS0 bits (in CKCON0 register, see Section "8 System Clock") to a non-0/0/0 value. The user should examine which program segments are suitable for lower operating speed. In principle, the lower operating speed should not affect the system's normal function. Then, restore its normal speed in the other program segments.

12.2.2. Sub-Clock Mode

The alternative to slow down the MCU's operating speed by programming OSCS1~0 can select the ILRCO for system clock. The 32KHz ILRCO provides the MCU to operates in an ultra low speed and low power operation. Additional programming SCKS2~SCKS0 bits (in CKCON0 register, see Section "8 System Clock"), the user could put the MCU speed down to 250Hz slowest.

12.2.3. RTC Mode

The **MG82FG5C64** has a simple RTC module that allows a user to continue running an accurate timer while the rest of the device is powered-down. In RTC mode, the RTC module behaves a "Clock" function and can be a wake-up source from chip power down by RTC overflow rate. Please refer Section "10 Real-Time-Clock(RTC)/System-Timer" for more detail information.

12.2.4. Watch Mode

If Watch-Dog-Timer is enabled and NSW is set, Watch-Dog-Timer will keep running in power down mode to support an auto-wakeup function, which named Watch Mode in **MG82FG5C64**. When WDT overflows, set WDTF and wakeup CPU from interrupt or system reset by software configured. The maximum wakeup period is about 2 seconds that is defined by WDT pre-scaler. Please refer Section "9 Watch Dog Timer (WDT)" and Section "14 Interrupt" for more detail information.

12.2.5. Monitor Mode

If AWBOD1 (PCON3.3) is set, BOD1 will keep VDD monitor in power down mode. It is the Monitor Mode in **MG82FG5C64**. When BOD1 meets the detection level, set BOF1 and wakeup CPU from interrupt or system reset by software configured. Please refer Section "12.1 Brown-Out Detector" and Section "14 Interrupt" for more detail information.

12.2.6. Idle Mode

Setting the IDL bit in PCON enters idle mode. Idle mode halts the internal CPU clock. The CPU state is preserved in its entirety, including the RAM, stack pointer, program counter, program status word, and accumulator. The Port pins hold the logical states they had at the time that Idle was activated. Idle mode leaves the peripherals running in order to allow them to wake up the CPU when an interrupt is generated. Timer 0, Timer 1, Timer 2, SPI, KBI, ADC, UART0, UART1, TWSI, TWI1, RTC, MCD, BOD0 and BOD1 will continue to function during Idle mode. PCA Timer and WDT are conditional enabled during Idle mode to wake up CPU. Any enabled interrupt source or reset may terminate Idle mode. When exiting Idle mode with an interrupt, the interrupt will immediately be serviced, and following RETI, the next instruction to be executed will be the one following the instruction that put the device into Idle.

The ADC input channels must be set to "***Analog Input Only***" in **P1AIO** SFR when MCU is in idle mode or power-down mode.

12.2.7. Power-down Mode

Setting the PD bit in PCON0 enters Power-down mode. Power-down mode stops the oscillator and powers down the Flash memory in order to minimize power consumption. Only the power-on circuitry will continue to draw power during Power-down. During Power-down the power supply voltage may be reduced to the RAM keep-alive voltage. The RAM contents will be retained; however, the SFR contents are not guaranteed once VDD has been reduced. Power-down may be exited by external reset, power-on reset, enabled external interrupts, enabled KBI, enabled RTC (RTC mode), enabled BOD1 (monitor mode) or enabled Non-Stop WDT (watch mode).

The user should not attempt to enter (or re-enter) the power-down mode for a minimum of 4 µs until after one of the following conditions has occurred: Start of code execution (after any type of reset), or Exit from power-down mode. To ensure minimum power consumption in power down mode, software must confirm all I/O not in floating state, including the port I/Os un-appearance on package pins. For example, P5.2 and P7.2 are not bonding-out in MG82FG5C64AD48 (LQFP48) package pins. Software may configure P5.2/P7.2 corresponding bit SFR to "0" (output low) to avoid pin floating in power-down mode.

Figure 12–2 shows the wakeup mechanism of power-down mode in **MG82FG5C64**.

Figure 12–2. Wakeup structure of Power Down mode

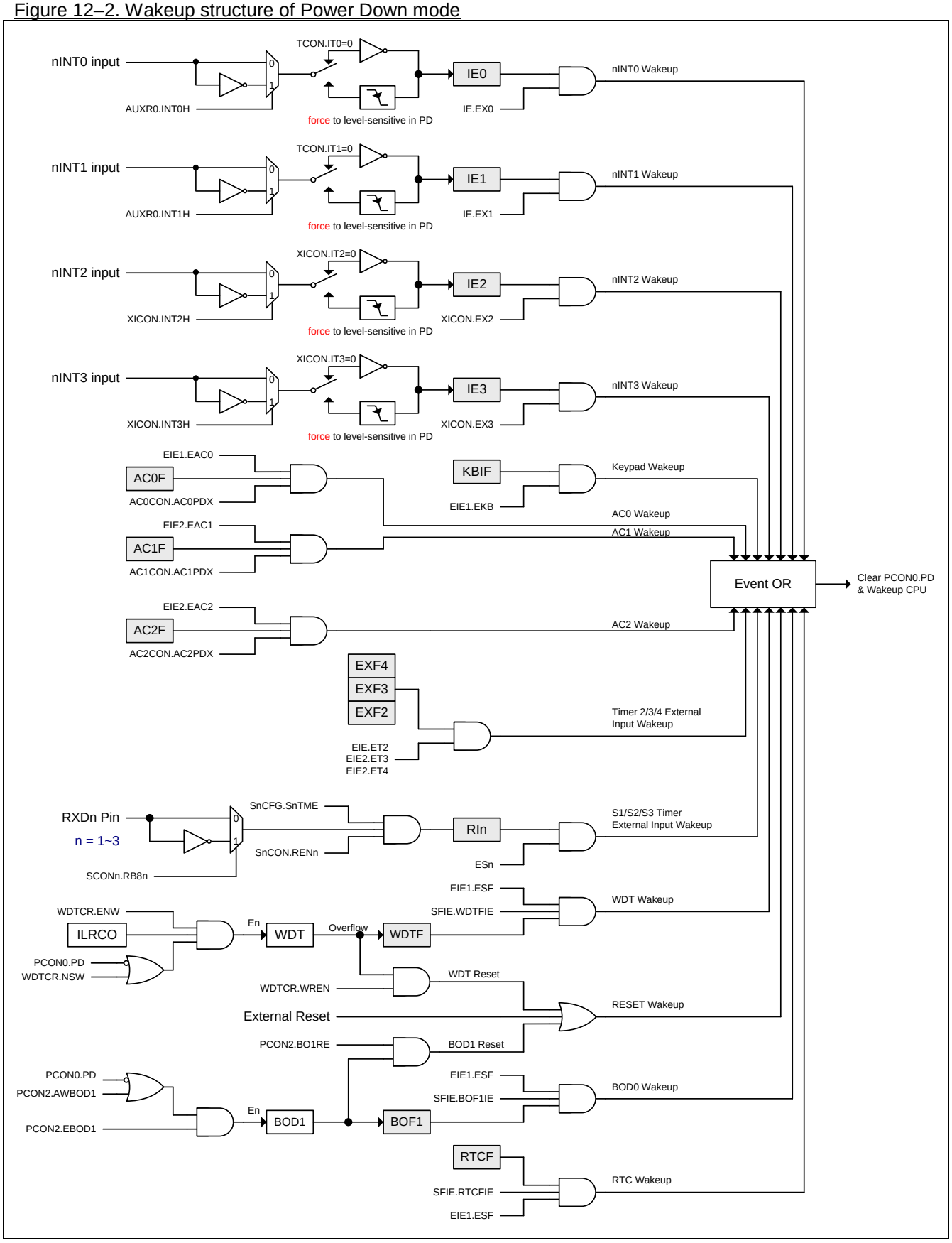

12.2.8. Interrupt Recovery from Power-down

Four external interrupts may be configured to terminate Power-down mode. External interrupts nINT0 (P3.2), nINT1 (P3.3), nINT2 (P4.3) and nINT3 (P4.2) may be used to exit Power-down. To wake up by external interrupt nINT0, nINT1, nINT2 or nINT3, the interrupt must be enabled and configured for level-sensitive operation. If the enabled external interrupts are configured to edge-sensitive operation (Falling or Rising), they will be **forced** to level-sensitive operation (Low level or High level) by hardware in power-down mode.

When terminating Power-down by an interrupt, the wake up period is internally timed. At the falling edge on the interrupt pin, Power-down is exited, the oscillator is restarted, and an internal timer begins counting. The internal clock will not be allowed to propagate and the CPU will not resume execution until after the timer has reached internal counter full. After the timeout period, the interrupt service routine will begin. To prevent the interrupt from re-triggering, the ISR should disable the interrupt before returning. The interrupt pin should be held low until the device has timed out and begun executing.

12.2.9. Reset Recovery from Power-down

Wakeup from Power-down through an external reset is similar to the interrupt. At the rising edge of RST, Power-down is exited, the oscillator is restarted, and an internal timer begins counting. The internal clock will not be allowed to propagate to the CPU until after the timer has reached internal counter full. The RST pin must be held high for longer than the timeout period to ensure that the device is reset properly. The device will begin executing once RST is brought low.

It should be noted that when idle is terminated by a hardware reset, the device normally resumes program execution, from where it left off, up to two machine cycles before the internal reset algorithm takes control. On-chip hardware inhibits access to internal RAM in this event, but access to the port pins is not inhibited. To eliminate the possibility of an unexpected write to a port pin when Idle is terminated by reset, the instruction following the one that invokes Idle should not be one that writes to a port pin or to external memory.

12.2.10. KBI wakeup Recovery from Power-down

The Keypad Interrupt of **MG82FG5C64**, KBI.7~0 have wakeup CPU capability that are enabled by the control registers in KBI module. OR software can configure the KBIPS1~0 on AUXR1.7~6 to swap on Port 0, Port 2, Port 5 or Port 3 & Port 4. Please refer Section “31 Auxiliary SFRs” for more detailed AUXR1 information.

Wakeup from Power-down through an enabled wakeup KBI is same to the interrupt. At the matched condition of enabled KBI pattern and enabled KBI interrupt (EIE1.5, EKB), Power-down is exited, the oscillator is restarted, and an internal timer begins counting. The internal clock will not be allowed to propagate to the CPU until after the timer has reached internal counter full. After the timeout period, CPU will meet a KBI interrupt and execute the interrupt service routine.

12.3. Power Control Register

PCON0: Power Control Register 0

SFR Page = 0~F & P
SFR Address = 0x87 POR = 0001-0000, RESET = 000X-0000

7	6	5	4	3	2	1	0
SMOD1	SMOD0	GF	POF0	GF1	GF0	PD	IDL
R/W	**R/W**	**R/W**	**R/W**	**R/W**	**R/W**	**R/W**	**R/W**

Bit 4: POF0, Power-On Flag 0.
0: This bit must be cleared by software writing one to it.
1: This bit is set by hardware if a Power-On Reset occurs.

Bit 1: PD, Power-Down control bit.
0: This bit could be cleared by CPU or any exited power-down event.
1: Setting this bit activates power down operation.

Bit 0: IDL, Idle mode control bit.
0: This bit could be cleared by CPU or any exited Idle mode event.
1: Setting this bit activates idle mode operation.

PCON1: Power Control Register 1

SFR Page = 0~F & P
SFR Address = 0x97 POR = 0000-x000

7	6	5	4	3	2	1	0
SWRF	EXRF	MCDF	RTCF	--	BOF1	BOF0	WDTF
R/W	**R/W**	**R/W**	**R/W**	**W**	**R/W**	**R/W**	**R/W**

Bit 7: SWRF, Software Reset Flag.
0: This bit must be cleared by software writing **"1"** to it.
1: This bit is set by hardware if a Software Reset occurs.

Bit 6: EXRF, External Reset Flag.
0: This bit must be cleared by software writing **"1"** to it.
1: This bit is set by hardware if an External Reset occurs.

Bit 5: MCDF.

Bit 4: RTCF, RTC overflow flag.
0: This bit must be cleared by software writing **"1"** on it. Software writing ":0" is no operation.
1: This bit is only set by hardware when RTCCT overflows. Writing **"1"** on this bit will clear RTCF.

Bit 3: Reserved. Software must write "0" on this bit when PCON1 is written.

Bit 2: BOF1, Brown-Out Detection flag 1.
0: This bit must be cleared by software writing **"1"** to it.
1: This bit is set by hardware if the operating voltage matches the detection level of Brown-Out Detector 1 (4.2V/3.7/2.4/2.0).

Bit 1: BOF0, Brown-Out Detection flag 0.
0: This bit must be cleared by software writing **"1"** to it.
1: This bit is set by hardware if the operating voltage matches the detection level of Brown-Out Detector 0 (1.7V).

Bit 0: WDTF, WDT overflow flag.
0: This bit must be cleared by software writing **"1"** to it.
1: This bit is set by hardware if a WDT overflow occurs.

PCON2: Power Control Register 2

SFR Page = P Only
SFR Address = 0x44 POR = 0000-0101

7	6	5	4	3	2	1	0
AWBOD1	**0**	BO1S1	BO1S0	BO1RE	EBOD1	BO0RE	**1**
R/W	**W**	**R/W**	**R/W**	**R/W**	**R/W**	**R/W**	**W**

Bit 7: AWBOD1, Awaked BOD1 in PD mode.
0: BOD1 is disabled in power-down mode.
1: BOD1 keeps operation in power-down mode.

Bit 6: Reserved. Software must write “0” on this bit when PCON2 is written.

Bit 5~4: BO1S[1:0]. Brown-Out detector 1 monitored level Selection.

BO1S[1:0]	BOD1 detecting level
0 0	2.0V
0 1	2.4V
1 0	3.7V
1 1	4.2V

Bit 3: BO1RE, BOD1 Reset Enabled.
0: Disable BOD1 to trigger a system reset when BOF1 is set.
1: Enable BOD1 to trigger a system reset when BOF1 is set.

Bit 2: EBOD1, Enable BOD1 that monitors VDD power dropped at a BO1S1~0 specified voltage level.
0: Disable BOD1 to slow down the chip power consumption.
1: Enable BOD1 to monitor VDD power dropped.

Bit 1: BO0RE, BOD0 Reset Enabled.
0: Disable BOD0 to trigger a system reset when BOF0 is set.
1: Enable BOD0 to trigger a system reset when BOF0 is set (VDD meets 1.7V).

Bit 0: Reserved. Software must write “**1**” on this bit when PCON2 is written.

13. Configurable I/O Ports

The **MG82FG5C64** has following I/O ports: P0.0~P0.7, P1.0~P1.7, P2.0~P2.7, P3.0~P3.7, P4.0~ P4.7, P5.0~P5.7, P6.0~P6.7 and P7.0~P7.2. If enable external crystal oscillator as system clock or RTC input, Port 6.0 and Port 6.1 are configured to XTAL2 and XTAL1. If disable external reset function, P4.7 function is valid. The exact number of I/O pins available depends upon the package types. See Table 13–1.

Table 13–1. Number of I/O Pins Available

Package Type	I/O Pins	Number of I/O ports
64-pin LQFP	P0.0~P0.7, P1.0~P1.7, P2.0~P2.7, P3.0~P3.7, P4.0~P4.6, P4.7(RST), P5.0~P5.7, P6.0 (ECKI/XTAL2), P6.1 (XTAL1), P6.2~P6.7 P7.0~P7.2	59 or 58 (RST selected) or 57 (RST & ECKI selected) or 56 (RST & XTAL selected)
48-pin LQFP	P0.0~P0.7, P1.0~P1.7, P2.0~P2.7, P3.0~P3.7, P4.0~P4.6, P4.7(RST), P6.0 (ECKI/XTAL2), P6.1 (XTAL1), P6.2~P6.3	44 or 43 (RST selected) or 42 (RST & ECKI selected) or 41 (RST & XTAL selected)

13.1. IO Structure

The I/O operating modes are distinguished two groups in **MG82FG5C64**. The first group is only for Port 3 to support four configurations on I/O operating. These are: quasi-bidirectional (standard 8051 I/O port), push-pull output, input-only (high-impedance input) and open-drain output. The Port 3 default setting is quasi-bidirectional mode with weakly pull-up resistance.

All other general port pins belong to the second group. They can be programmed to two output modes, push-pull output and open-drain output with pull-up resistor control. The default setting of this group I/O is open-drain mode with output high, which means input mode with high impedance state.

Following sections describe the configuration of the all types I/O mode.

13.1.1. Port 3 Quasi-Bidirectional IO Structure

Port 3 pins in quasi-bidirectional mode are similar to the standard 8051 port pins. A quasi-bidirectional port can be used as an input and output without the need to reconfigure the port. This is possible because when the port outputs a logic high, it is weakly driven, allowing an external device to pull the pin low. When the pin outputs low, it is driven strongly and able to sink a large current. There are three pull-up transistors in the quasi-bidirectional output that serve different purposes.

One of these pull-ups, called the “very weak” pull-up, is turned on whenever the port register for the pin contains a logic “1”. This very weak pull-up sources a very small current that will pull the pin high if it is left floating. A second pull-up, called the “weak” pull-up, is turned on when the port register for the pin contains a logic “1” and the pin itself is also at a logic “1” level. This pull-up provides the primary source current for a quasi-bidirectional pin that is outputting a 1. If this pin is pulled low by the external device, this weak pull-up turns off, and only the very weak pull-up remains on. In order to pull the pin low under these conditions, the external device has to sink enough current to over-power the weak pull-up and pull the port pin below its input threshold voltage. The third pull-up is referred to as the “strong” pull-up. This pull-up is used to speed up low-to-high transitions on a quasi-bidirectional port pin when the port register changes from a logic “0” to a logic “1”. When this occurs, the strong pull-up turns on for one CPU clocks, quickly pulling the port pin high.

The quasi-bidirectional port configuration is shown in Figure 13–1.

Figure 13–1. Port 3 Quasi-Bidirectional I/O

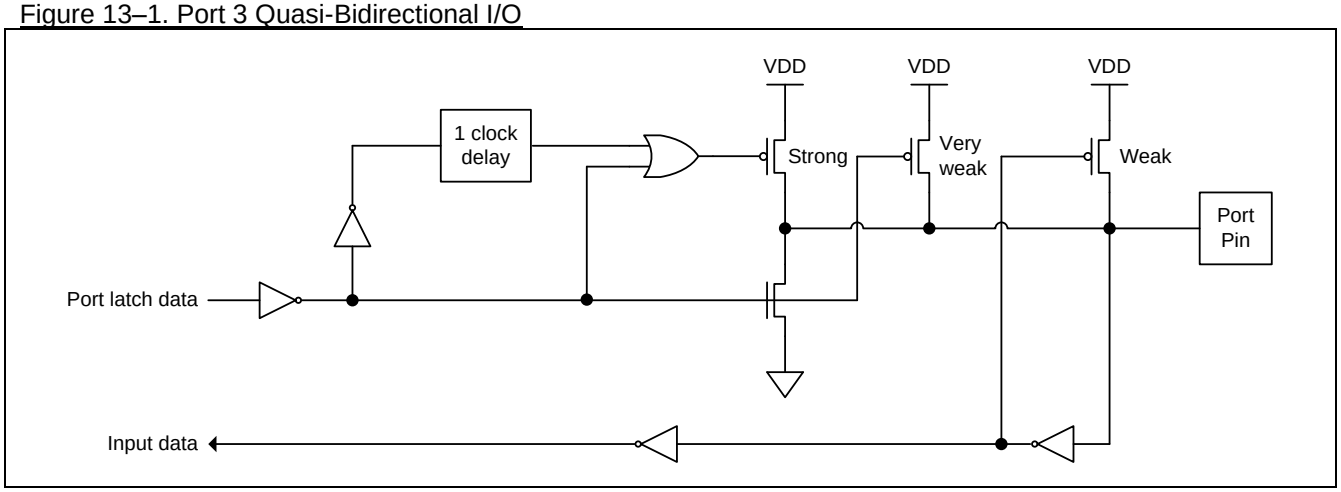

13.1.2. Port 3 Push-Pull Output Structure

The push-pull output configuration on Port 3 has the same pull-down structure as both the open-drain and the quasi-bidirectional output modes, but provides a continuous strong pull-up when the port register contains a logic "1". The push-pull mode may be used when more source current is needed from a port output. In addition, the input path of the port pin in this configuration is also the same as quasi-bidirectional mode.

The push-pull port configuration is shown in Figure 13–2.

Figure 13–2. Port 3 Push-Pull Output

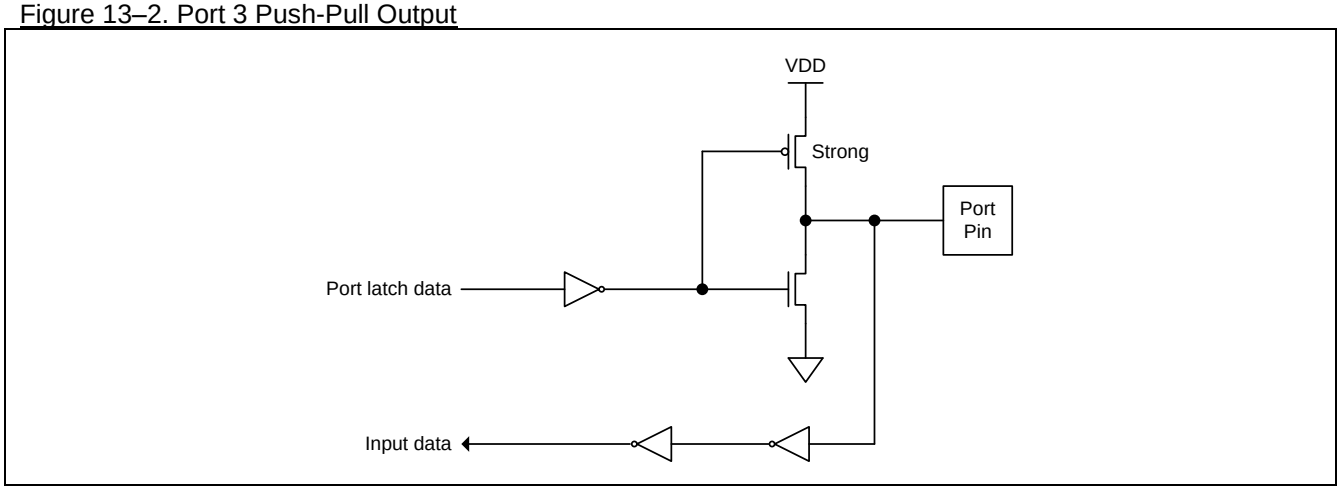

13.1.3. Port 3 Input-Only (High Impedance Input) Structure

The input-only configuration on Port 3 is an input without any pull-up resistors on the pin, as shown in Figure 13–3.

Figure 13–3. Port 3 Input-Only

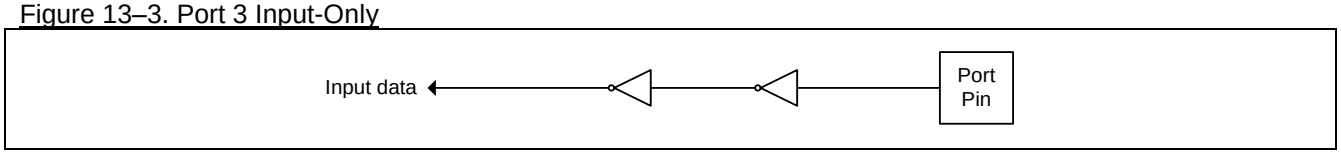

13.1.4. Port 3 Open-Drain Output Structure

The open-drain output configuration on Port 3 turns off all pull-ups and only drives the pull-down transistor of the port pin when the port register contains a logic “0”. To use this configuration in application, a port pin must have an external pull-up, typically a resistor tied to VDD. The pull-down for this mode is the same as for the quasi-bidirectional mode. In addition, the input path of the port pin in this configuration is also the same as quasi-bidirectional mode.

The open-drain port configuration is shown in Figure 13–4.

Figure 13–4. Port 3 Open-Drain Output

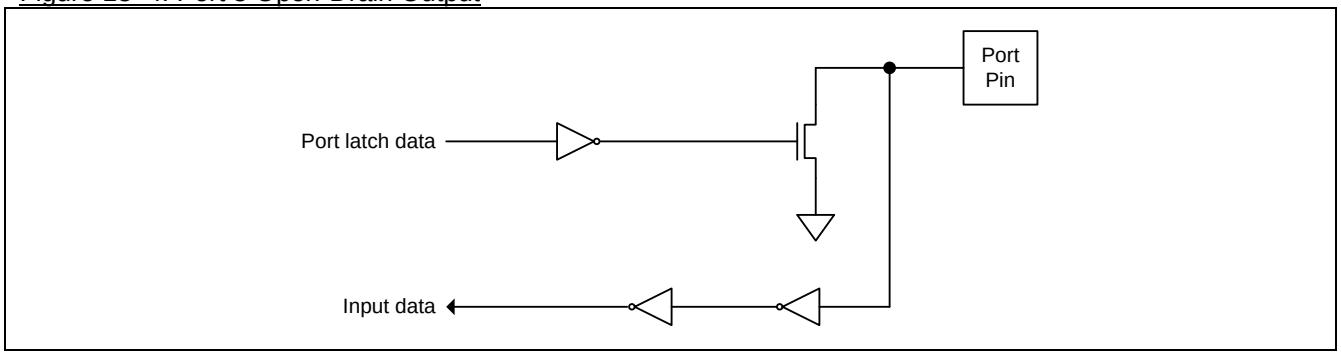

13.1.5. General Open-Drain Output Structure

The open-drain output configuration on general port pins only drives the pull-down transistor of the port pin when the Port Data register contains a logic “0”. To use this configuration in application, a port pin can select an external pull-up, or an on-chip pull-up by software enabled in PUCON0 and PUCON1.

The general open-drain port configuration is shown in Figure 13–5.

Figure 13–5. General Open-Drain Output

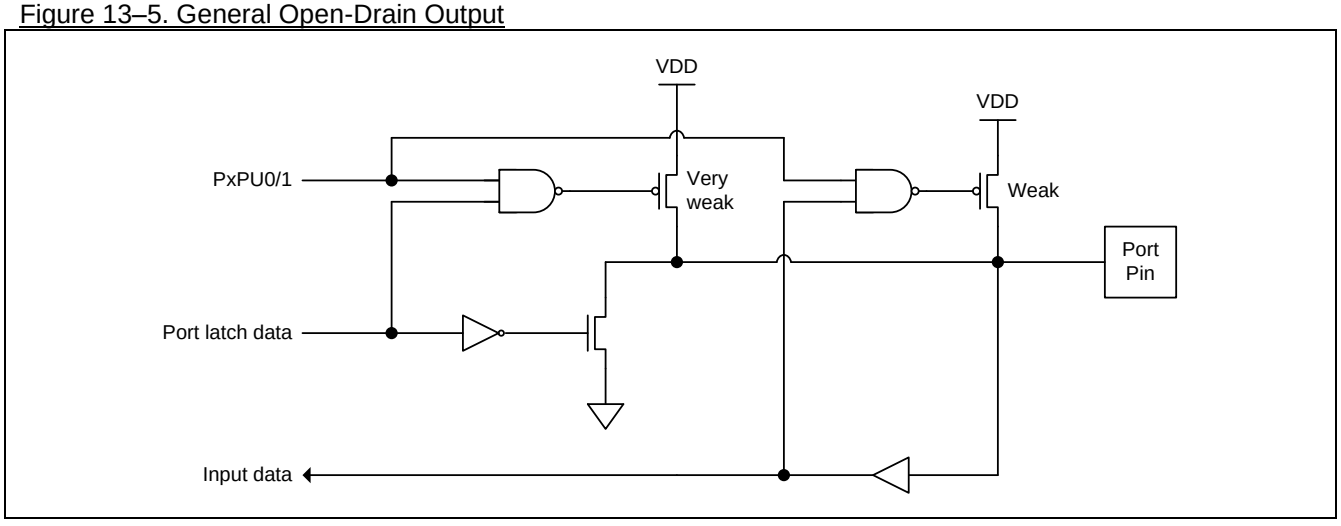

13.1.6. General Push-Pull Output Structure

The push-pull output configuration on general port pins has the same pull-down structure as the open-drain output modes, but provides a continuous strong pull-up when the port register contains a logic “1”. The push-pull mode may be used when more source current is needed from a port output. In addition, the input path of the port pin in this configuration is also the same as open-drain mode.

The push-pull port configuration is shown in Figure 13–6.

Figure 13–6. General Push-Pull Output

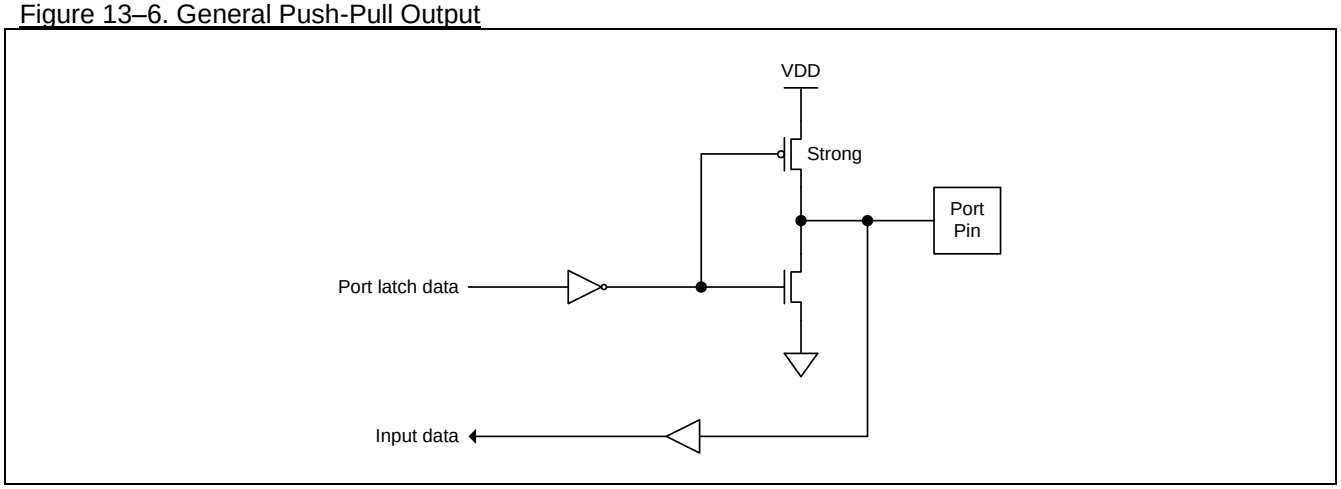

13.1.7. General Port Digital Input Configured

A Port pin is configured as a digital input by setting its output mode to “Open-Drain” and writing a logic “1” to the associated bit in the Port Data register. For example, P1.1 is configured as a digital input by setting P1M0.1 to a logic 0 and P1.1 to a logic 1.

13.2. I/O Port Register

All I/O port pins on the **MG82FG5C64** may be individually and independently configured by software to select its operating mode. Only Port 3 has four operating modes, as shown in Table 13–2. Two mode registers select the output type for each port 3 pin.

Table 13–2. Port 3 Configuration Settings

P3M0.y	P3M1.y	Port Mode
0	0	Quasi-Bidirectional
0	1	Push-Pull Output
1	0	Input Only (High Impedance Input)
1	1	Open-Drain Output

Where y=0~5 (port pin). The registers P3M0 and P3M1 are listed in each port description.

Other general port pins support two operating modes, as shown in Table 13–3. One mode register selects the output type for each port pin.

Table 13–3. General Port Configuration Settings

PxM0.y	Port Mode
0	Open-Drain Output
1	Push-Pull Output

Where x= **1, 2, 4, 6** (port number), and y=0~7 (port pin). The registers PxM0 are listed in each port description

13.2.1. Port 0 Register

P0: Port 0 Register

SFR Page = 0~F
SFR Address = 0x80 RESET = 1111-1111

7	6	5	4	3	2	1	0
P0.7	P0.6	P0.5	P0.4	P0.3	P0.2	P0.1	P0.0
R/W	**R/W**	**R/W**	**R/W**	**R/W**	**R/W**	**R/W**	**R/W**

Bit 7~0: P0.7~P0.0 could be only set/cleared by CPU.

P0M0: Port 0 Mode Register 0

SFR Page = 1 only
SFR Address = 0x93 RESET = 0000-0000

7	6	5	4	3	2	1	0
P0M0.7	P0M0.6	P0M0.5	P0M0.4	P0M0.3	P0M0.2	P0M0.1	P0M0.0
R/W	**R/W**	**R/W**	**R/W**	**R/W**	**R/W**	**R/W**	**R/W**

0: Port pin output mode is configured to open-drain.
1: Port pin output mode is configured to push-pull.

13.2.2. Port 1 Register

P1: Port 1 Register

SFR Page = 0~F
SFR Address = 0x90 RESET = 1111-1111

7	6	5	4	3	2	1	0
P1.7	P1.6	P1.5	P1.4	P1.3	P1.2	P1.1	P1.0
R/W	**R/W**	**R/W**	**R/W**	**R/W**	**R/W**	**R/W**	**R/W**

Bit 7~0: P1.7~P1.0 could be only set/cleared by CPU.

P1M0: Port 1 Mode Register 0

SFR Page = 0~F

SFR Address = 0x91 RESET = 0000-0000

7	6	5	4	3	2	1	0
P1M0.7	P1M0.6	P1M0.5	P1M0.4	P1M0.3	P1M0.2	P1M0.1	P1M0.0
R/W	**R/W**	**R/W**	**R/W**	**R/W**	**R/W**	**R/W**	**R/W**

0: Port pin output mode is configured to open-drain.
1: Port pin output mode is configured to push-pull.

13.2.3. Port 2 Register

P2: Port 2 Register

SFR Page = 0~F

SFR Address = 0xA0 RESET = 1111-1111

7	6	5	4	3	2	1	0
P2.7	P2.6	P2.5	P2.4	P2.3	P2.2	P2.1	P2.0
R/W	**R/W**	**R/W**	**R/W**	**R/W**	**R/W**	**R/W**	**R/W**

Bit 7~0: P2.7~P2.0 could be only set/cleared by CPU.

P2M0: Port 2 Mode Register 0

SFR Page = 1 only

SFR Address = 0x95 RESET = 0000-0000

7	6	5	4	3	2	1	0
P2M0.7	P2M0.6	P2M0.5	P2M0.4	P2M0.3	P2M0.2	P2M0.1	P2M0.0
R/W	**R/W**	**R/W**	**R/W**	**R/W**	**R/W**	**R/W**	**R/W**

0: Port pin output mode is configured to open-drain.
1: Port pin output mode is configured to push-pull.

13.2.4. Port 3 Register

P3: Port 3 Register

SFR Page = 0~F

SFR Address = 0xB0 RESET = 1111-1111

7	6	5	4	3	2	1	0
P3.7	P3.6	P3.5	P3.4	P3.3	P3.2	P3.1	P3.0
R/W	**R/W**	**R/W**	**R/W**	**R/W**	**R/W**	**R/W**	**R/W**

Bit 7~0: P3.7~P3.0 could be only set/cleared by CPU.

P3M0: Port 3 Mode Register 0

SFR Page = 0~F

SFR Address = 0xB1 RESET = 0000-0000

7	6	5	4	3	2	1	0
P3M0.7	P3M0.6	P3M0.5	P3M0.4	P3M0.3	P3M0.2	P3M0.1	P3M0.0
R/W	**R/W**	**R/W**	**R/W**	**R/W**	**R/W**	**R/W**	**R/W**

P3M1: Port 3 Mode Register 1

SFR Page = 0~F

SFR Address = 0xB2 RESET = 0000-0000

7	6	5	4	3	2	1	0
P3M1.7	P3M1.6	P3M1.5	P3M1.4	P3M1.3	P3M1.2	P3M1.1	P3M1.0
R/W	**R/W**	**R/W**	**R/W**	**R/W**	**R/W**	**R/W**	**R/W**

P3.7 and P3.6 have alternated function for /RD and /WR in off-chip memory access cycle.

13.2.5. Port 4 Register

P4: Port 4 Register

SFR Page = 0~F
SFR Address = 0xE8 RESET = 1111-1111

7	6	5	4	3	2	1	0
P4.7	P4.6	P4.5	P4.4	P4.3	P4.2	P4.1	P4.0
R/W	**R/W**	**R/W**	**R/W**	**R/W**	**R/W**	**R/W**	**R/W**

Bit 7~0: P4.7~P4.0 could be set/cleared by CPU.

P4M0: Port 4 Mode Register 0

SFR Page = 1 only
SFR Address = 0xB3 RESET = 0000-0000

7	6	5	4	3	2	1	0
P4M0.7	P4M0.6	P4M0.5	P4M0.4	P4M0.3	P4M0.2	P4M0.1	P4M0.0
W	**R/W**	**R/W**	**R/W**	**R/W**	**R/W**	**R/W**	**R/W**

0: Port pin output mode is configured to open-drain.
1: Port pin output mode is configured to push-pull.

13.2.6. Port 5 Register

P5: Port 5 Register

SFR Page = **0 only**
SFR Address = **0xF8** RESET = 1111-1111

7	6	5	4	3	2	1	0
P5.7	P5.6	P5.5	P5.4	P5.3	P5.2	P5.1	P5.0
R/W	**R/W**	**R/W**	**R/W**	**R/W**	**R/W**	**R/W**	**R/W**

Bit 7~0: P5.7~P5.0 could be only set/cleared by CPU.

P5M0: Port 5 Mode Register 0

SFR Page = **0 only**
SFR Address = **0xB5** RESET = 0000-0000

7	6	5	4	3	2	1	0
P5M0.7	P5M0.6	P5M0.5	P5M0.4	P5M0.3	P5M0.2	P5M0.1	P5M0.0
R/W	**R/W**	**R/W**	**R/W**	**R/W**	**R/W**	**R/W**	**R/W**

0: Port pin output mode is configured to open-drain.
1: Port pin output mode is configured to push-pull.

13.2.7. Port 6 Register

P6: Port 6 Register

SFR Page = **1 only**
SFR Address = **0xF8** RESET = 1111-1111

7	6	5	4	3	2	1	0
P6.7	P6.6	P6.5	P6.4	P6.3	P6.2	P6.1	P6.0
R/W	**R/W**	**R/W**	**R/W**	**R/W**	**R/W**	**R/W**	**R/W**

Bit 7~0: P6.7~P6.0 could be only set/cleared by CPU.
P6.1 and P6.0 have the alternated function for crystal oscillating circuit, XTAL1 and XTAL2.

P6M0: Port 6 Mode Register 0

SFR Page = **1 only**

SFR Address = **0xB5** RESET = 0000-0000

7	6	5	4	3	2	1	0
P6M0.7	P6M0.6	P6M0.5	P6M0.4	P6M0.3	P6M0.2	P6M0.1	P6M0.0
R/W	**R/W**	**R/W**	**R/W**	**R/W**	**R/W**	**R/W**	**R/W**

0: Port pin output mode is configured to open-drain.
1: Port pin output mode is configured to push-pull.

13.2.8. Port 7 Register

P7: Port 7 Register

SFR Page = **2 only**

SFR Address = **0xF8** RESET = xxxx-x111

7	6	5	4	3	2	1	0
--	--	--	--	--	P7.2	P7.1	P7.0
W	**W**	**W**	**W**	**W**	**R/W**	**R/W**	**R/W**

Bit 7~3: Reserved. Software must write “1” on these bits when P7 is written.

Bit 2~0: P7.2~P7.0 could be only set/cleared by CPU.

P7M0: Port 7 Mode Register 0

SFR Page = **2 only**

SFR Address = **0xB5** RESET = xxxx-x000

7	6	5	4	3	2	1	0
--	--	--	--	--	P7M0.2	P7M0.1	P7M0.0
W	**W**	**W**	**W**	**W**	**R/W**	**R/W**	**R/W**

Bit 7~3: Reserved. Software must write “1” on these bits when P7M0 is written.

Bit 2~0:
0: Port pin output mode is configured to open-drain.
1: Port pin output mode is configured to push-pull.

13.2.9. Pull-Up Control Register

PUCON0: Port Pull-up Control Register 0

SFR Page = **0 only**

SFR Address = **0xB4** RESET = 0000-0000

7	6	5	4	3	2	1	0
P4PU1	P4PU0	P2PU1	P2PU0	P1PU1	P1PU0	P0PU1	P0PU0
R/W	**R/W**	**R/W**	**R/W**	**R/W**	**R/W**	**RW**	**RW**

Bit 7: P4PU1, Port 4 pull-up enable control on high nibble.
0: Disable the P4.7 ~ P4.4 pull-up resistor in open-drain output mode.
1: Enable the P4.7 ~ P4.4 pull-up resistor in open-drain output mode.

Bit 6: P4PU0, Port 4 pull-up enable control on low nibble.
0: Disable the P4.3 ~ P4.0 pull-up resistor in open-drain output mode.
1: Enable the P4.3 ~ P4.0 pull-up resistor in open-drain output mode.

Bit 5: P2PU1, Port 2 pull-up enable control on high nibble.
0: Disable the P2.7 ~ P2.4 pull-up resistor in open-drain output mode.
1: Enable the P2.7 ~ P2.4 pull-up resistor in open-drain output mode.

Bit 4: P2PU0, Port 2 pull-up enable control on low nibble.

0: Disable the P2.3 ~ P2.0 pull-up resistor in open-drain output mode.
1: Enable the P2.3 ~ P2.0 pull-up resistor in open-drain output mode.

Bit 3: P1PU1, Port 1 pull-up enable control on high nibble.
0: Disable the P1.7 ~ P1.4 pull-up resistor in open-drain output mode.
1: Enable the P1.7 ~ P1.4 pull-up resistor in open-drain output mode.

Bit 2: P1PU0, Port 1 pull-up enable control on low nibble.
0: Disable the P1.3 ~ P1.0 pull-up resistor in open-drain output mode.
1: Enable the P1.3 ~ P1.0 pull-up resistor in open-drain output mode.

Bit 1: P0PU1, Port 0 pull-up enable control on high nibble.
0: Disable the P0.7 ~ P0.4 pull-up resistor in open-drain output mode.
1: Enable the P0.7 ~ P0.4 pull-up resistor in open-drain output mode.

Bit 0: P0PU0, Port 0 pull-up enable control on low nibble.
0: Disable the P0.3 ~ P0.0 pull-up resistor in open-drain output mode.
1: Enable the P0.3 ~ P0.0 pull-up resistor in open-drain output mode.

PUCON1: Port Pull-up Control Register 1

SFR Page = **1 only**
SFR Address = **0xB4** RESET = xxx0-0000

7	6	5	4	3	2	1	0
--	--	--	P7PU0	P6PU1	P6PU0	P5PU1	P5PU0
W	**W**	**W**	**R/W**	**R/W**	**R/W**	**RW**	**RW**

Bit 7 ~ 5: Reserved. Software must write “0” on these bits when PUCON1 is written.

Bit 4: P7PU0, Port 7 pull-up enable control on low nibble.
0: Disable the P7.2 ~ P7.0 pull-up resistor in open-drain output mode.
1: Enable the P7.2 ~ P7.0 pull-up resistor in open-drain output mode.

Bit 3: P6PU1, Port 6 pull-up enable control on high nibble.
0: Disable the P6.7 ~ P6.4 pull-up resistor in open-drain output mode.
1: Enable the P6.7 ~ P6.4 pull-up resistor in open-drain output mode.

Bit 2: P6PU0, Port 6 pull-up enable control on low nibble.
0: Disable the P6.3 ~ P6.0 pull-up resistor in open-drain output mode.
1: Enable the P6.3 ~ P6.0 pull-up resistor in open-drain output mode.

Bit 1: P5PU1, Port 5 pull-up enable control on high nibble.
0: Disable the P5.7 ~ P5.4 pull-up resistor in open-drain output mode.
1: Enable the P5.7 ~ P5.4 pull-up resistor in open-drain output mode.

Bit 0: P5PU0, Port 5 pull-up enable control on low nibble.
0: Disable the P5.3 ~ P5.0 pull-up resistor in open-drain output mode.
1: Enable the P5.3 ~ P5.0 pull-up resistor in open-drain output mode.

13.2.10. Analog Input Configuration Register

P1AIO: Port 1 Analog Input Only

SFR Page = **0 only**
SFR Address = **0x92** RESET = 0000-0000

7	6	5	4	3	2	1	0
P17AIO	P16AIO	P15AIO	P14AIO	P13AIO	P12AIO	P11AIO	P10AIO
R/W	**R/W**	**R/W**	**R/W**	**R/W**	**R/W**	**R/W**	**R/W**

Bit 7~0: P17AIO ~ P10AIO, P1.7~P1.0 Analog-Input-Only configuration registers.
0: Port pin has digital and analog input capability.

1: Port pin only has analog input only for ADC input application. The corresponding Port PIN Register bit will always read as “0” when this bit is set.

PxAIO1: Port Pin Analog Input Only 1 Register

SFR Page = **0 only**

SFR Address = **0x94** RESET = 0000-0000

7	6	5	4	3	2	1	0
P07AIO	P06AIO	P05AIO	P04AIO	P03AIO	P02AIO	P01AIO	AC2AIO
R/W	**R/W**	**R/W**	**R/W**	**R/W**	**R/W**	**R/W**	**R/W**

Bit 7~6: P07AIO ~ P06AIO, P0.7~P0.6 Analog-Input-Only configuration registers.
0: Port pin has digital and analog input capability.
1: Port pin only has analog input only for AC1 (Analog Comparator 0) input application. The corresponding Port PIN Register bit will always read as “0” when this bit is set.

Bit 5~1: P05AIO ~ P01AIO, P0.5~P0.1 Analog-Input-Only configuration registers.
0: Port pin has digital and analog input capability.
1: Port pin only has analog input only for AC0 (Analog Comparator 0) input application. The corresponding Port PIN Register bit will always read as “0” when this bit is set.

Bit 0: AC2AIO, AC2 (Analog Comparator 2) port pin analog-input configuration register.

AC2AIO	AC2NIS (AC2MOD.4)	P6.3 (AC2PI)	P6.2 (AC2NI)
0	x	P6M0.3	P6M0.2
1	0	Analog Input Only	Analog Input Only
1	1	Analog Input Only	P6M0.2

PxAIO2: Port Pin Analog Input Only 2 Register

SFR Page = **1 only**

SFR Address = **0x92** RESET = 0000-0000

7	6	5	4	3	2	1	0
P20AIO	P56AIO	P55AIO	P54AIO	P53AIO	P52AIO	P51AIO	P50AIO
R/W	**R/W**	**R/W**	**R/W**	**R/W**	**R/W**	**R/W**	**R/W**

Bit 7: P20AIO, P2.0 Analog-Input-Only configuration register.
0: Port pin has digital and analog input capability.
1: Port pin only has analog input only for ADC input application. The corresponding Port PIN Register bit will always read as “0” when this bit is set.

Bit 6~0: P56AIO ~ P50AIO, P5.6~P5.0 Analog-Input-Only configuration registers.
0: Port pin has digital and analog input capability.
1: Port pin only has analog input only for ADC input application. The corresponding Port PIN Register bit will always read as “0” when this bit is set.

13.2.11. Port Output Driving Strength Control Register

In **MG82FG5C64,** all port pins have two driving strength selection by software configured except P4.7, P6.1 and P6.0. Please refer to get the driving strength information on the port pins.

PDRVC0: Port Drive Control Register 0

SFR Page = **2 only**

SFR Address = **0xB4** RESET = 0000-0000

7	6	5	4	3	2	1	0
P3DC1	P3DC0	P2DC1	P2DC0	P1DC1	P1DC0	P0DC1	P0DC0
R/W	**R/W**	**R/W**	**R/W**	**R/W**	**R/W**	**RW**	**RW**

Bit 7: P3DC1, Port 3 output driving strength control on high nibble.
0: Select the P3.7 ~ P3.4 output with high driving strength.

1: Select the P3.7 ~ P3.4 output with low driving strength.

Bit 6: P3DC0, Port 3 output driving strength control on low nibble.
0: Select the P3.3 ~ P3.0 output with high driving strength.
1: Select the P3.3 ~ P3.0 output with low driving strength.

Bit 5: P2DC1, Port 2 output driving strength control on high nibble.
0: Select the P2.7 ~ P2.4 output with high driving strength.
1: Select the P2.7 ~ P2.4 output with low driving strength.

Bit 4: P2DC0, Port 2 output driving strength control on low nibble.
0: Select the P2.3 ~ P2.0 output with high driving strength.
1: Select the P2.3 ~ P2.0 output with low driving strength.

Bit 3: P1DC1, Port 1 output driving strength control on high nibble.
0: Select the P1.7 ~ P1.4 output with high driving strength.
1: Select the P1.7 ~ P1.4 output with low driving strength.

Bit 2: P1DC0, Port 1 output driving strength control on low nibble.
0: Select the P1.3 ~ P1.0 output with high driving strength.
1: Select the P1.3 ~ P1.0 output with low driving strength.

Bit 1: P0DC1, Port 0 output driving strength control on high nibble.
0: Select the P0.7 ~ P0.4 output with high driving strength.
1: Select the P0.7 ~ P0.4 output with low driving strength.

Bit 0: P0DC0, Port 0 output driving strength control on low nibble.
0: Select the P0.3 ~ P0.0 output with high driving strength.
1: Select the P0.3 ~ P0.0 output with low driving strength.

PDRVC1: Port Drive Control Register 1

SFR Page = **3 only**
SFR Address = **0xB4** RESET = x000-0000

7	6	5	4	3	2	1	0
--	P7DC0	P6DC1	P6DC0	P5DC1	P5DC0	P4DC1	P4DC0
W	**R/W**	**R/W**	**R/W**	**R/W**	**R/W**	**RW**	**RW**

Bit 7: Reserved. Software must write “0” on this bit when PDRVC1 is written.

Bit 6: P7DC0, Port 7 output driving strength control on low nibble.
0: Select the P7.2 ~ P7.0 output with high driving strength.
1: Select the P7.2 ~ P7.0 output with low driving strength.

Bit 5: P6DC1, Port 6 output driving strength control on high nibble.
0: Select the P6.7 ~ P6.4 output with high driving strength.
1: Select the P6.7 ~ P6.4 output with low driving strength.

Bit 4: P6DC0, Port 6 output driving strength control on low nibble.
0: Select the P6.3 ~ P6.2 output with high driving strength.
1: Select the P6.3 ~ P6.2 output with low driving strength.

Bit 3: P5DC1, Port 5 output driving strength control on high nibble.
0: Select the P5.7 ~ P5.4 output with high driving strength.
1: Select the P5.7 ~ P5.4 output with low driving strength.

Bit 2: P5DC0, Port 5 output driving strength control on low nibble.
0: Select the P5.3 ~ P5.0 output with high driving strength.
1: Select the P5.3 ~ P5.0 output with low driving strength.

Bit 1: P4DC1, Port 4 output driving strength control on high nibble.

0: Select the P4.6 ~ P4.4 output with high driving strength.
1: Select the P4.6 ~ P4.4 output with low driving strength.

Bit 0: P0DC0, Port 0 output driving strength control on low nibble.
0: Select the P4.3 ~ P4.0 output with high driving strength.
1: Select the P4.3 ~ P4.0 output with low driving strength.

14. Interrupt

The **MG82FG5C64** has **24** interrupt sources with a four-level interrupt structure. There are several SFRs associated with the four-level interrupt. They are the IE, IP0L, IP0H, EIE1, EIP1L, EIP1H, EIE2, EIP2L, EIP2H and XICON. The IP0H (Interrupt Priority 0 High), EIP1H (Extended Interrupt Priority 1 High) and EIP2H (Extended Interrupt Priority 2 High) registers make the four-level interrupt structure possible. The four priority level interrupt structure allows great flexibility in handling these interrupt sources.

14.1. Interrupt Structure

Table 14–1 lists all the interrupt sources. The 'Request Bits' are the interrupt flags that will generate an interrupt if it is enabled by setting the 'Enable Bit'. Of course, the global enable bit EA (in IE0 register) should have been set previously. The 'Request Bits' can be set or cleared by software, with the same result as though it had been set or cleared by hardware. That is, interrupts can be generated or pending interrupts can be cancelled in software. The 'Priority Bits' determine the priority level for each interrupt. The 'Priority within Level' is the polling sequence used to resolve simultaneous requests of the same priority level. The 'Vector Address' is the entry point of an interrupt service routine in the program memory.

Figure 14–1 shows the interrupt system. Each of these interrupts will be briefly described in the following sections.

Table 14–1. Interrupt Sources

No	Source Name	Enable Bit	Request Bits	Priority Bits	Polling Priority	Vector Address
#1	External Interrupt 0, nINT0	EX0	IE0	[PX0H, PX0L]	(Highest)	0003H
#2	Timer 0	ET0	TF0	[PT0H, PT0L]	...	000Bh
#3	External Interrupt 1, nINT1	EX1	IE1	[PX1H, PX1L]	...	0013H
#4	Timer 1	ET1	TF1	[PT1H, PT1L]	...	001BH
#5	Serial Port 0	ES0	RI0, TI0	[PS0H, PS0L]	...	0023H
#6	Timer 2	ET2	TF2, EXF2	[PT2H, PT2L]	...	002Bh
#7	External Interrupt 2, nINT2	EX2	IE2	[PX2H, PX2L]	...	0033H
#8	External Interrupt 3, nINT3	EX3	IE3	[PX3H, PX3L]	...	003BH
#9	SPI	ESPI	SPIF	[PSPIH, PSPIL]	...	0043H
#10	ADC	EADC	ADCI	[PADCH, PADCL]	...	004Bh
#11	PCA0	EPCA	CF, CCFn (n=0~5)	[PPCAH, PPCAL]	...	0053H
#12	System Flag	ESF	(Note 1)	[PSFH, PSFL]	...	005BH
#13	Serial Port 1	ES1	RI1, TI1	[PS1H, PS1L]	...	0063H
#14	Keypad Interrupt	EKB	KBIF	[PKBH, PKBL]	...	006BH
#15	TWSI	ETWSI	SI	[PTWIH, PTWIL]	...	0073H
#16	Analog Comparator 0	EAC0	AC0F	[PAC0H, PAC0L]	...	007BH
#17	Timer 3	ET3	TF3, EXF3	[PT2H, PT2L]	...	0083H
#18	Analog Comparator 1	EAC1	AC1F	[PAC1H, PAC1L]	...	008BH
#19	Serial Port 2	ES2	RI2, TI2	[PS2H, PS2L]	...	0093H
#20	Timer 4	ET4	TF4, EXF4	[PT3H, PT3L]	...	009BH
#21	Serial Port 3	ES3	RI3, TI3	[PS3H, PS3L]	...	00A3H
#22	PCA1	EPCA1	C1F, C1CFn (n=0~5)	[PPCA1H, PPCA1L]	...	00ABH
#23	TWI1	ETWI1	SI1	[PTWI1H, PTWI1L]	...	00B3H
#24	Analog Comparator 2	EAC2	AC2F	[PAC2H, PAC2L]	(Lowest)	00BBH

Note 1: The System Flag interrupt flags include: WDTF, BOF0, BOF1, RTCF and MCDF in PCON1, TI0 in S0CON, STAF and STOF in AUXR3.

Figure 14–1. Interrupt System

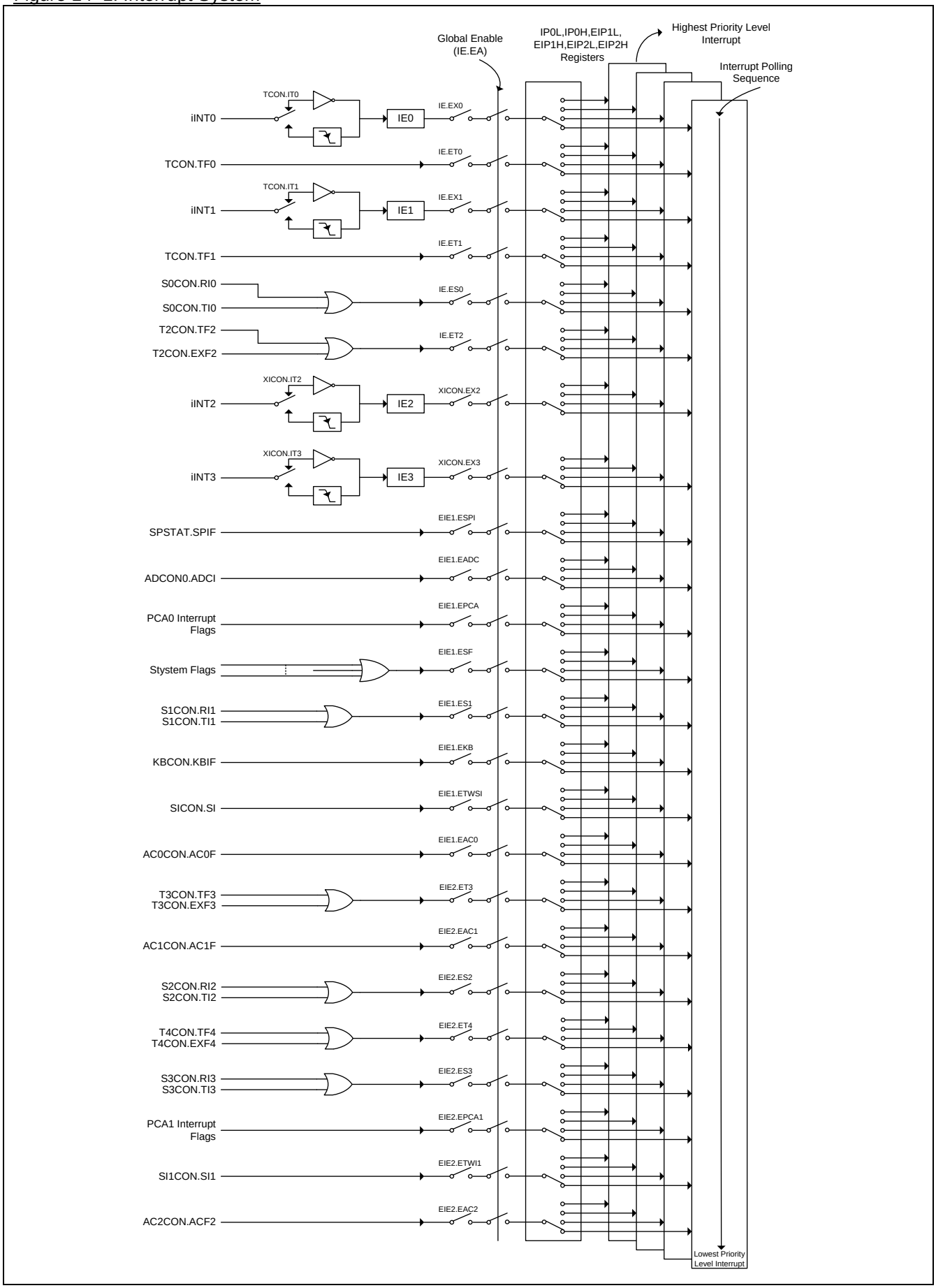

14.2. Interrupt Source

Table 14–2. Interrupt Source Flag

No	Source Name	Request Bits	Bit Location
#1	External Interrupt 0,nINT0	IE0	TCON.1
#2	Timer 0	TF0	TCON.5
#3	External Interrupt 1,nINT1	IE1	TCON.3
#4	Timer 1	TF1	TCON.7
#5	Serial Port 0	RI0, TI0	S0CON.0 S0CON.1
#6	Timer 2	TF2, EXF2	T2CON.7 T2CON.6
#7	External Interrupt 2,nINT2	IE2	XICON.1
#8	External Interrupt 3,nINT3	IE3	XICON.5
#9	SPI	SPIF	SPSTAT.7
#10	ADC	ADCI	ADCON0.4
#11	PCA0	CF, CCFn (n=0~5)	CCON.7 CCON.5~0
#12	System Flag	WDTF, BOF1, BOF0, RTCF, MCDF, STAF, STOF, (TI0)	PCON1.0 PCON1.1 PCON1.2 PCON1.4 PCON1.5 AUXR3.7 AUXR3.6 S0CON.1
#13	Serial Port 1	RI1, TI1	S1CON.0 S1CON.1
#14	Keypad Interrupt	KBIF	KBCON.0
#15	TWSI	SI	SICON.3
#16	Analog Comparator 0	AC0F	AC0CON.4
#17	Timer 3	TF3, EXF3, (TF3L)	T3CON.7 T3CON.6 T3CON.5
#18	Analog Comparator 1	AC1F	AC1CON.4
#19	Serial Port 2	RI2, TI2	S2CON.0 S2CON.1
#20	Timer 4	TF4, EXF4, (TF4L)	T4CON.7 T4CON.6 T4CON.5
#21	Serial Port 3	RI3, TI3	S3CON.0 S3CON.1
#22	PCA1	C1F, C1CFn (n=0~5)	C1CON.7 C1CON.5~0
#23	TWI1	SI1	SI1CON.3
#24	Analog Comparator 2	AC2F	AC2CON.4

The external interrupt nINT0, nINT1, nINT2 and nINT3 can each be either level-activated or transition-activated, depending on bits IT0 and IT1 in register TCON, IT2 and IT3 in register XICON. The flags that actually generate these interrupts are bits IE0 and IE1 in TCON, IE2 and IE3 in XICON. When an external interrupt is generated, the flag that generated it is cleared by the hardware when the service routine is vectored to *only if the interrupt was transition –activated*, then the external requesting source is what controls the request flag, rather than the on-chip hardware.

The Timer0 and Timer1 interrupts are generated by TF0 and TF1, which are set by a rollover in their respective Timer/Counter registers in most cases. When a timer interrupt is generated, the flag that generated it is cleared by the on-chip hardware when the service routine is vectored to.

The serial port 0 interrupt is generated by the logical OR of RI0 and TI0. Neither of these flags is cleared by hardware when the service routine is vectored to. The service routine should poll RI0 and TI0 to determine which one to request service and it will be cleared by software.

The timer2 interrupt is generated by the logical OR of TF2 and EXF2. Just the same as serial port, neither of these flags is cleared by hardware when the service routine is vectored to.

The timer3 interrupt is generated by the logical OR of TF3 and EXF3. If the timer 3 in split mode, the TL3 overflow will set another interrupt flag, TF3L. Just the same as serial port, neither of these flags is cleared by hardware when the service routine is vectored to.

The timer4 interrupt is generated by the logical OR of TF4 and EXF4. If the timer 4 in split mode, the TL4 overflow will set another interrupt flag, TF4L. Just the same as serial port, neither of these flags is cleared by hardware when the service routine is vectored to.

SPI interrupt is generated by SPIF in SPSTAT, which are set by SPI engine finishes a SPI transfer. It will not be cleared by hardware when the service routine is vectored to.

The ADC interrupt is generated by ADCI in ADCON0. It will not be cleared by hardware when the service routine is vectored to.

The PCA0 interrupt is generated by the logical OR of CF, CCF5, CCF4, CCF3, CCF2, CCF1 and CCF0 in CCON. Neither of these flags is cleared by hardware when the service routine is vectored to. The service routine should poll these flags to determine which one to request service and it will be cleared by software.

The PCA1 interrupt is generated by the logical OR of C1F, C1CF5, C1CF4, C1CF3, C1CF2, C1CF1 and C1CF0 in C1CON. Neither of these flags is cleared by hardware when the service routine is vectored to. The service routine should poll these flags to determine which one to request service and it will be cleared by software.

The System Flag interrupt is generated by MCDF, RTCF, BOF1, BOF0, WDTF, TI0, STAF and STOF. STAF and STOF are set by serial interface detection and stored in AUXR3. The Serial Port TI flag is optional to locate the interrupt vector shared with system flag interrupt which is enabled by UTIE set. The rest flags are stored in PCON1. MCDF is set by Missing-Clock-Detection activated. RTCF is set by RTC counter overflow. BOF1 and BOF0 are set by on chip Brownout-Detector (BOD1 and BOD0) met the low voltage event. WDTF is set by Watch-Dog-Timer overflow. These flags will not be cleared by hardware when the service routine is vectored to. Figure 14–2 shows the system flag interrupt configuration.

Figure 14–2. System flag interrupt configuration

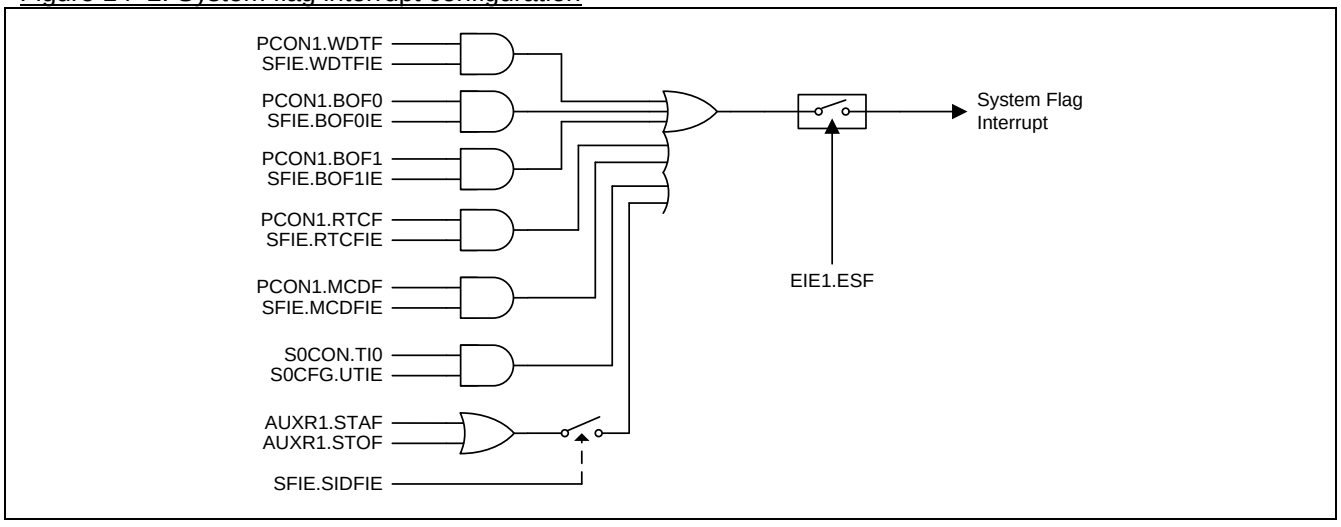

The serial port 1 interrupt is generated by the logical OR of RI1 and TI1. Neither of these flags is cleared by hardware when the service routine is vectored to. The service routine should poll RI1 and TI1 to determine which one to request service and it will be cleared by software.

The serial port 2 interrupt is generated by the logical OR of RI2 and TI2. Neither of these flags is cleared by hardware when the service routine is vectored to. The service routine should poll RI2 and TI2 to determine which one to request service and it will be cleared by software.

The serial port 3 interrupt is generated by the logical OR of RI3 and TI3. Neither of these flags is cleared by hardware when the service routine is vectored to. The service routine should poll RI3 and TI3 to determine which one to request service and it will be cleared by software.

The keypad interrupt is generated by KBCON.KBIF, which is set by Keypad module meets the input pattern. It will not be cleared by hardware when the service routine is vectored to.

The TWSI interrupt is generate by SI in SICON, which is set by TWSI engine detecting a new bus state updated. It will not be cleared by hardware when the service routine is vectored to.

The TWI1 interrupt is generated by SI1 in SI1CON, which is set by TWI1 engine detecting a new bus state updated. It will not be cleared by hardware when the service routine is vectored to.

The AC0 interrupt is generated by AC0F in AC0CON, which is set by AC0OUT changed detecting on rising, falling or dual edge. It will not be cleared by hardware when the service routine is vectored to.

The AC1 interrupt is generated by AC1F in AC1CON, which is set by AC1OUT changed detecting on rising, falling or dual edge. It will not be cleared by hardware when the service routine is vectored to.

The AC2 interrupt is generated by AC2F in AC2CON, which is set by AC2OUT changed detecting on rising, falling or dual edge. It will not be cleared by hardware when the service routine is vectored to.

All of the bits that generate interrupts can be set or cleared by software, with the same result as though it had been set or cleared by hardware. In other words, interrupts can be generated or pending interrupts can be canceled in software.

14.3. Interrupt Enable

Table 14–3. Interrupt Enable

No	Source Name	Enable Bit	Bit Location
#1	External Interrupt 0,nINT0	EX0	IE.0
#2	Timer 0	ET0	IE.1
#3	External Interrupt 1,nINT1	EX1	IE.2
#4	Timer 1	ET1	IE.3
#5	Serial Port 0	ES0	IE.4
#6	Timer 2	ET2	IE.5
#7	External Interrupt 2,nINT2	EX2	XICON.2
#8	External Interrupt 3,nINT3	EX3	XICON.3
#9	SPI	ESPI	EIE1.0
#10	ADC	EADC	EIE1.1
#11	PCA	EPCA	EIE1.2
#12	System Flag	ESF	EIE1.3
#13	Serial Port 1	ES1	EIE1.4
#14	Keypad Interrupt	EKB	EIE1.5
#15	TWSI	ETWSI	EIE1.6
#16	Analog Comparator 0	EAC0	EIE1.7
#17	Timer 3	ET3	EIE2.0
#18	Analog Comparator 1	EAC1	EIE2.1
#19	Serial Port 2	ES2	EIE2.2
#20	Timer 4	ET4	EIE2.3
#21	Serial Port 3	ES3	EIE2.4
#22	PCA1	EPCA1	EIE2.5
#23	TWI1	ETWI1	EIE2.6
#24	Analog Comparator 2	EAC2	EIE2.7

There are **24** interrupt sources available in **MG82FG5C64**. Each of these interrupt sources can be individually enabled or disabled by setting or clearing an interrupt enable bit in the registers IE, EIE1, EIE2 and XICON. IE also contains a global disable bit, EA, which can be cleared to disable all interrupts at once. If EA is set to ‘1’, the interrupts are individually enabled or disabled by their corresponding enable bits. If EA is cleared to ‘0’, all interrupts are disabled.

14.4. Interrupt Priority

The priority scheme for servicing the interrupts is the same as that for the 80C51, except there are four interrupt levels rather than two as on the 80C51. The Priority Bits (see Table 14–1) determine the priority level of each interrupt. IP0L, IP0H, EIP1L, EIP1H, EIP2L and EIP2H are combined to 4-level priority interrupt. Table 14–4 shows the bit values and priority levels associated with each combination.

Table 14–4. Interrupt Priority

{IPnH.x , IPnL.x}	Priority Level
11	1 (highest)
10	2
01	3
00	4

Each interrupt source has two corresponding bits to represent its priority. One is located in SFR named IPnH and the other in IPnL register. Higher-priority interrupt will be not interrupted by lower-priority interrupt request. If two interrupt requests of different priority levels are received simultaneously, the request of higher priority is serviced. If interrupt requests of the same priority level are received simultaneously, an internal polling sequence determine which request is serviced. Table 14–2 shows the internal polling sequence in the same priority level and the interrupt vector address.

14.5. Interrupt Process

Each interrupt flag is sampled at every system clock cycle. The samples are polled during the next system clock. If one of the flags was in a set condition at first cycle, the second cycle(polling cycle) will find it and the interrupt system will generate an hardware LCALL to the appropriate service routine as long as it is not blocked by any of the following conditions.

Block conditions:

- An interrupt of equal or higher priority level is already in progress.
- The current cycle (polling cycle) is not the final cycle in the execution of the instruction in progress.
- The instruction in progress is RETI or any write to the IE, IP0L, IPH, EIE1, EIP1L, EIP1H, EIE2, EIP2L, EIP2H and XICON registers.

Any of these three conditions will block the generation of the hardware LCALL to the interrupt service routine. Condition 2 ensures that the instruction in progress will be completed before vectoring into any service routine. Condition 3 ensures that if the instruction in progress is RETI or any access to IE or IP, then at least one or more instruction will be executed before any interrupt is vectored to.

14.6. nINTx Input Source Selection and Input Filter (x=0~3)

The **MG82FG5C64** provides flexible nINT0, nINT1, nINT2 and nINT3 source selection to share the port pin inputs…

Figure 14-2. Configuration of nINT0~3 port pin selection.

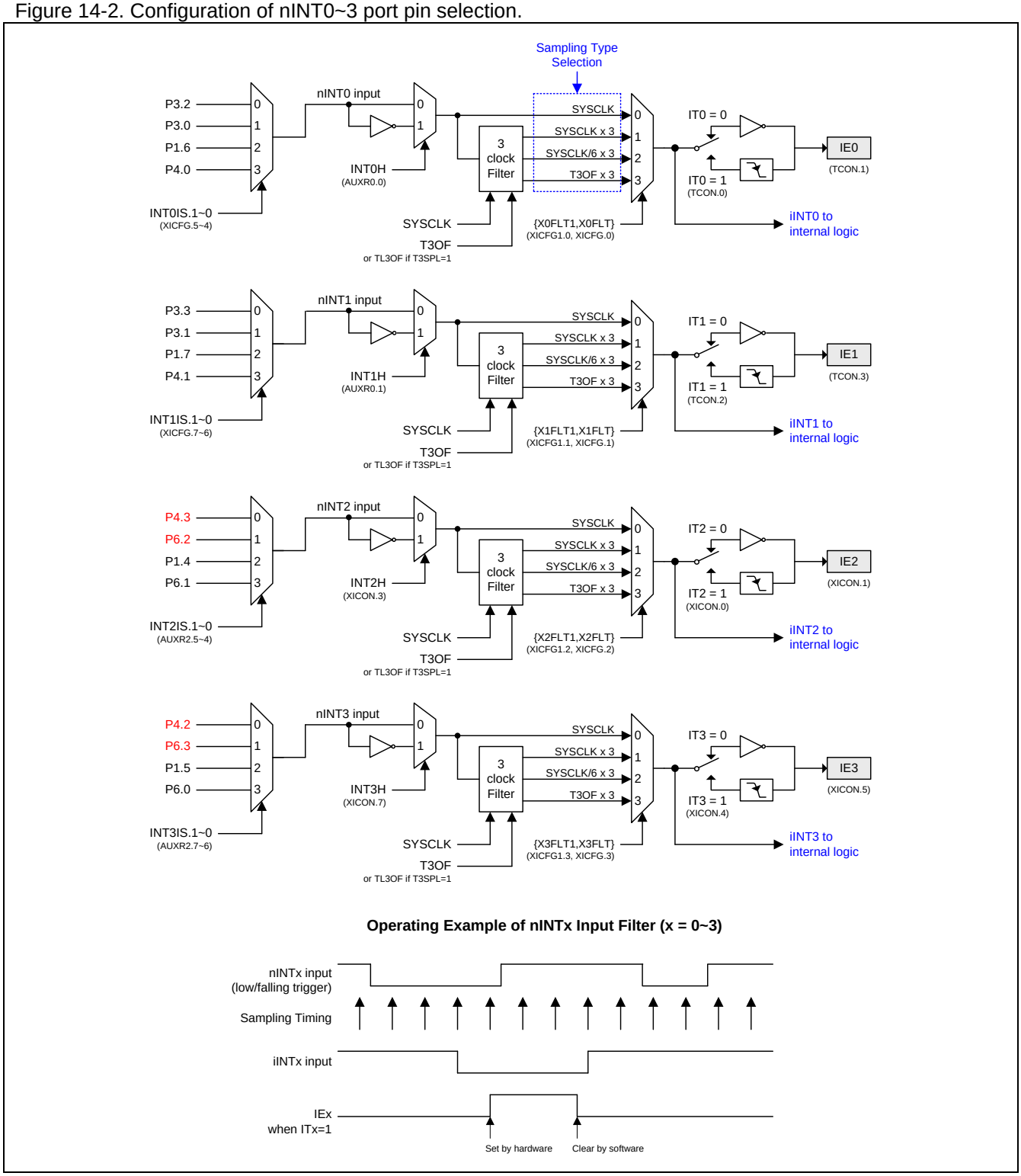

14.7. Interrupt Register

TCON: Timer/Counter Control Register

SFR Page = 0~F

SFR Address = 0x88 RESET = 0000-0000

7	6	5	4	3	2	1	0
TF1	TR1	TF0	TR0	IE1	IT1	IE0	IT0
R/W	**R/W**	**R/W**	**R/W**	**R/W**	**R/W**	**R/W**	**R/W**

Bit 3: IE1, Interrupt 1 (nINT1) Edge flag.
0: Cleared when interrupt processed on if transition-activated.
1: Set by hardware when external interrupt 1 (nINT1) edge is detected (transmitted or level-activated).

Bit 2: IT1: Interrupt 1 (nINT1) Type control bit.
0: Cleared by software to specify low level triggered external interrupt 1 (nINT1). If INT1H (AUXR0.1) is set, this bit specifies high level triggered on nINT1.
1: Set by software to specify falling edge triggered external interrupt 1 (nINT1). If INT1H (AUXR0.1) is set, this bit specifies rising edge triggered on nINT1.

Bit 1: IE0, Interrupt 0 (nINT0) Edge flag.
0: Cleared when interrupt processed on if transition-activated.
1: Set by hardware when external interrupt 0 (nINT0) edge is detected (transmitted or level-activated).

Bit 0: IT0: Interrupt 0 (nINT0) Type control bit.
0: Cleared by software to specify low level triggered external interrupt 0 (nINT0). If INT0H (AUXR0.0) is set, this bit specifies high level triggered on nINT0.
1: Set by software to specify falling edge triggered external interrupt 0 (nINT0). If INT0H (AUXR0.0) is set, this bit specifies rising edge triggered on nINT0.

IE: Interrupt Enable Register

SFR Page = 0~F

SFR Address = 0xA8 RESET = 0X00-0000

7	6	5	4	3	2	1	0
EA	--	ET2	ES0	ET1	EX1	ET0	EX0
R/W	**W**	**R/W**	**R/W**	**R/W**	**R/W**	**R/W**	**R/W**

Bit 7: EA, All interrupts enable register.
0: Global disables all interrupts.
1: Global enables all interrupts.

Bit 6: Reserved. Software must write “0” on this bit when IE is written.

Bit 5: ET2, Timer 2 interrupt enable register.
0: Disable Timer 2 interrupt.
1: Enable Timer 2 interrupt.

Bit 4: ES, Serial port 0 interrupt (UART0) enable register.
0: Disable serial port 0 interrupt.
1: Enable serial port 0 interrupt.

Bit 3: ET1, Timer 1 interrupt enable register.
0: Disable Timer 1 interrupt.
1: Enable Timer 1 interrupt.

Bit 2: EX1, External interrupt 1 (nINT1) enable register.
0: Disable external interrupt 1.
1: Enable external interrupt 1.

Bit 1: ET0, Timer 0 interrupt enable register.

0: Disable Timer 0 interrupt.
1: Enable Timer 1 interrupt.

Bit 0: EX0, External interrupt 0 (nINT0) enable register.
0: Disable external interrupt 0.
1: Enable external interrupt 1.

AUXR0: Auxiliary Register 0

SFR Page = 0~F
SFR Address = 0xA1 RESET = 0000-0000

7	6	5	4	3	2	1	0
P60OC1	P60OC0	P60FD	T0XL	P4FS1	P4FS0	INT1H	INT0H
R/W	**R/W**	**R/W**	**R/W**	**R/W**	**R/W**	**R/W**	**R/W**

Bit 1: INT1H, INT1 High/Rising trigger enable.
0: Remain INT1 triggered on low level or falling edge on selected port pin input.
1: Set INT1 triggered on high level or rising edge on selected port pin input.

Bit 0: INT0H, INT0 High/Rising trigger enable.
0: Remain INT0 triggered on low level or falling edge on selected port pin input.
1: Set INT0 triggered on high level or rising edge on selected port pin input.

XICON: External Interrupt Control Register

SFR Page = 0~F
SFR Address = 0xC0 RESET = 0000-0000

7	6	5	4	3	2	1	0
INT3H	EX3	IE3	IT3	INT2H	EX2	IE2	IT2
R/W	**R/W**	**R/W**	**R/W**	**R/W**	**R/W**	**R/W**	**R/W**

Bit 7: INT3H, nINT3 High/Rising trigger enable.
0: Maintain nINT3 triggered on low level or falling edge on selected port pin input.
1: Set nINT3 triggered on high level or rising edge on selected port pin input.

Bit 6: EX3, external interrupt 3 (nINT3) enable register.
0: Disable external interrupt 3.
1: Enable external interrupt 3.
When CPU in IDLE and PD mode, nINT3 event will trigger IE3 and have wake-up CPU capability if EX3 is enabled. If EX3 is disabled, IE3 on nINT3 will not wake-up CPU from IDLE or PD mode.

Bit 5: IE3, External interrupt 3 (nINT3) Edge flag.
0: Cleared by hardware when the interrupt is starting to be serviced. It also could be cleared by CPU.
1: Set by hardware when external interrupt edge detected. It also could be set by CPU.

Bit 4: IT3, Interrupt 3 type control bit.
0: Cleared by CPU to specify low level triggered on nINT3. If INT3H is set, this bit specifies high level triggered on nINT3.
1: Set by CPU to specify falling edge triggered on nINT3. If INT3H is set, this bit specifies rising edge triggered on nINT3.

Bit 3: INT2H, nINT2 High/Rising trigger enable.
0: Maintain nINT2 triggered on low level or falling edge on selected port pin input.
1: Set nINT2 triggered on high level or rising edge on selected port pin input.

Bit 2: EX2, external interrupt 2 (nINT2) enable register.
0: Disable external interrupt 2.
1: Enable external interrupt 2.
When CPU in IDLE and PD mode, nINT2 event will trigger IE2 and have wake-up CPU capability if EX2 is enabled. If EX2 is disabled, IE2 on nINT2 will not wake-up CPU from IDLE or PD mode.

Bit 1: IE2, External interrupt 2 (nINT2) Edge flag.

0: Cleared by hardware when the interrupt is starting to be serviced. It also could be cleared by CPU.
1: Set by hardware when external interrupt edge detected. It also could be set by CPU.

Bit 0: IT2, Interrupt 2 type control bit.
0: Cleared by CPU to specify low level triggered on nINT2. If INT2H is set, this bit specifies high level triggered on nINT2.
1: Set by CPU to specify falling edge triggered on nINT2. If INT2H is set, this bit specifies rising edge triggered on nINT2.

IP0L: Interrupt Priority 0 Low Register

SFR Page = 0~F
SFR Address = 0xB8 RESET = 0000-0000

7	6	5	4	3	2	1	0
PX3L	PX2L	PT2L	PSL	PT1L	PX1L	PT0L	PX0L
R/W	**R/W**	**R/W**	**R/W**	**R/W**	**R/W**	**R/W**	**R/W**

Bit 7: PX3L, external interrupt 3 priority-L register.
Bit 6: PX2L, external interrupt 2 priority-L register.
Bit 5: PT2L, Timer 2 interrupt priority-L register.
Bit 4: PSL, Serial port interrupt priority-L register.
Bit 3: PT1L, Timer 1 interrupt priority-L register.
Bit 2: PX1L, external interrupt 1 priority-L register.
Bit 1: PT0L, Timer 0 interrupt priority-L register.
Bit 0: PX0L, external interrupt 0 priority-L register.

IP0H: Interrupt Priority 0 High Register

SFR Page = 0~F
SFR Address = 0xB7 RESET = 0000-0000

7	6	5	4	3	2	1	0
PX3H	PX2H	PT2H	PSH	PT1H	PX1H	PT0H	PX0H
R/W	**R/W**	**R/W**	**R/W**	**R/W**	**R/W**	**R/W**	**R/W**

Bit 7: PX3H, external interrupt 3 priority-H register.
Bit 6: PX2H, external interrupt 2 priority-H register.
Bit 5: PT2H, Timer 2 interrupt priority-H register.
Bit 4: PSH, Serial port interrupt priority-H register.
Bit 3: PT1H, Timer 1 interrupt priority-H register.
Bit 2: PX1H, external interrupt 1 priority-H register.
Bit 1: PT0H, Timer 0 interrupt priority-H register.
Bit 0: PX0H, external interrupt 0 priority-H register.

EIE1: Extended Interrupt Enable 1 Register

SFR Page = 0~F
SFR Address = 0xAD RESET = 0000-0000

7	6	5	4	3	2	1	0
EAC0	ETWSI	EKB	ES1	ESF	EPCA	EADC	ESPI
R/W	**R/W**	**R/W**	**R/W**	**R/W**	**R/W**	**R/W**	**R/W**

Bit 7: EAC0, Enable Analog Comparator 0 (AC0) Interrupt.
0: Disable AC0 interrupt.
1: Enable AC0 interrupt.

Bit 6: ETWSI, Enable TWSI interrupt.
0: Disable TWSI interrupt.
1: Enable TWSI interrupt.

Bit 5: EKBI, Enable Keypad Interrupt.
0: Disable the interrupt when KBCON.KBIF is set in Keypad control module.

1: Enable the interrupt when KBCON.KBIF is set in Keypad control module.

Bit 4: ES1, Enable Serial Port 1 (UART1) interrupt.
0: Disable Serial Port 1 interrupt.
1: Enable Serial Port 1 interrupt.

Bit 3: ESF, Enable System Flag interrupt.
0: Disable the interrupt when the group of {MCDF, RTCF, BOF1, BOF0, WDTF} in PCON1, {STAF, STOF} in AUXR3, or TI0 with UTIE is set.
1: Enable the interrupt of the flags of {MCDF, RTCF, BOF1, BOF0, WDTF} in PCON1, {STAF, STOF} in AUXR3, or TI0 with UTIE when the associated system flag interrupt is enabled in SFIE.

Bit 2: EPCA, Enable PCA0 interrupt.
0: Disable PCA0 interrupt.
1: Enable PCA0 interrupt.

Bit 1: EADC, Enable ADC Interrupt.
0: Disable the interrupt when ADCON0.ADCI is set in ADC module.
1: Enable the interrupt when ACCON0.ADCI is set in ADC module.

Bit 0: ESPI, Enable SPI Interrupt.
0: Disable the interrupt when SPSTAT.SPIF is set in SPI module.
1: Enable the interrupt when SPSTAT.SPIF is set in SPI module.

EIP1L: Extended Interrupt Priority 1 Low Register

SFR Page = 0~F
SFR Address = 0xAE RESET = 0000-0000

7	6	5	4	3	2	1	0
PAC0L	PTWIL	PKBL	PS1L	PSFL	PPCAL	PADCL	PSPIL
R/W	**R/W**	**R/W**	**R/W**	**R/W**	**R/W**	**R/W**	**R/W**

Bit 7: PAC0L, AC0 interrupt priority-L register.
Bit 6: PTWIL, TWSI interrupt priority-L register.
Bit 5: PKBL, keypad interrupt priority-L register.
Bit 4: PS1L, UART1 interrupt priority-L register.
Bit 3: PSFL, system flag interrupt priority-L register.
Bit 2: PPCAL, PCA0 interrupt priority-L register.
Bit 1: PADCL, ADC interrupt priority-L register.
Bit 0: PSPIL, SPI interrupt priority-L register.

EIP1H: Extended Interrupt Priority 1 High Register

SFR Page = 0~F
SFR Address = 0xAF RESET = 0000-0000

7	6	5	4	3	2	1	0
PAC0H	PTWIH	PKBH	PS1H	PSFH	PPCAH	PADCH	PSPIH
R/W	**R/W**	**R/W**	**R/W**	**R/W**	**R/W**	**R/W**	**R/W**

Bit 7: PAC0H, AC0 priority-H register.
Bit 6: PTWIH, TWSI interrupt priority-H register.
Bit 5: PKBH, keypad interrupt priority-H register.
Bit 4: PS1H, UART1 interrupt priority-H register.
Bit 3: PSFH, system flag interrupt priority-H register.
Bit 2: PPCAH, PCA0 interrupt priority-H register.
Bit 1: PADCH, ADC interrupt priority-H register.
Bit 0: PSPIH, SPI interrupt priority-H register.

EIE2: Extended Interrupt Enable 2 Register

SFR Page = 0~F

SFR Address = 0xA5 RESET = 0000-0000

7	6	5	4	3	2	1	0
EAC2	ETWI1	EPCA1	ES3	ET4	ES2	EAC1	ET3
R/W	**R/W**	**R/W**	**R/W**	**R/W**	**R/W**	**R/W**	**R/W**

Bit 7: EAC2, Enable Analog Comparator 2 (AC2) Interrupt.
0: Disable AC2 interrupt.
1: Enable AC2 interrupt.

Bit 6: ETWI1, Enable TWI1 interrupt.
0: Disable TWI1 interrupt.
1: Enable TWI1 interrupt.

Bit 5: EPCA1, Enable PCA1 interrupt.
0: Disable PCA1 interrupt.
1: Enable PCA1 interrupt.

Bit 4: ES3, Enable Serial Port 3 (UART3) interrupt.
0: Disable Serial Port 3 interrupt.
1: Enable Serial Port 3 interrupt.

Bit 3: ET4, Timer 4 interrupt enable register.
0: Disable Timer 4 interrupt.
1: Enable Timer 4 interrupt.

Bit 2: ES2, Enable Serial Port 2 (UART2) interrupt.
0: Disable Serial Port 2 interrupt.
1: Enable Serial Port 2 interrupt.

Bit 1: EAC1, Enable Analog Comparator 1 (AC1) Interrupt.
0: Disable AC1 interrupt.
1: Enable AC1 interrupt.

Bit 0: ET3, Timer 3 interrupt enable register.
0: Disable Timer 3 interrupt.
1: Enable Timer 3 interrupt.

EIP2L: Extended Interrupt Priority 2 Low Register

SFR Page = 0~F

SFR Address = 0xA6 RESET = 0000-0000

7	6	5	4	3	2	1	0
PAC2L	PTWI1L	PPCA1L	PS3L	PT4L	PS2L	PAC1L	PT3L
R/W	**R/W**	**R/W**	**R/W**	**R/W**	**R/W**	**R/W**	**R/W**

Bit 7: PAC2L, AC2 interrupt priority-L register.
Bit 6: PTWI1L, TWI1 interrupt priority-L register.
Bit 5: PPCA1L, PCA1 interrupt priority-L register.
Bit 4: PS3L, UART3 interrupt priority-L register.
Bit 3: PT4L, Timer 4 interrupt priority-L register.
Bit 2: PS2L, UART2 interrupt priority-L register.
Bit 1: PAC1L, AC1 interrupt priority-L register.
Bit 0: PT3L, Timer 3 interrupt priority-L register.

EIP2H: Extended Interrupt Priority 2 High Register

SFR Page = 0~F

SFR Address = 0xA7 RESET = 0000-0000

7	6	5	4	3	2	1	0
PAC2H	PTWI1H	PPCA1H	PS3H	PT4H	PS2H	PAC1H	PT3H
R/W	**R/W**	**R/W**	**R/W**	**R/W**	**R/W**	**R/W**	**R/W**

Bit 7: PAC2H, AC2 interrupt priority-H register.
Bit 6: PTWI1H, TWI1 interrupt priority-H register.
Bit 5: PPCA1H, PCA1 interrupt priority-H register.
Bit 4: PS3H, UART3 interrupt priority-H register.
Bit 3: PT4H, Timer 4 interrupt priority-H register.
Bit 2: PS2H, UART2 interrupt priority-H register.
Bit 1: PAC1H, AC1 interrupt priority-H register.
Bit 0: PT3H, Timer 3 interrupt priority-H register.

XICFG: External Interrupt Configured Register

SFR Page = **0 only**

SFR Address = 0xC1 RESET = 0000-0000

7	6	5	4	3	2	1	0
INT1IS.1	INT1IS.0	INT0IS.1	INT0IS.0	X3FLT	X2FLT	X1FLT	X0FLT
R/W	**R/W**	**R/W**	**R/W**	**R/W**	**R/W**	**R/W**	**R/W**

Bit 7~6: INT1IS.1~0, nINT3 input selection bits which function is defined as following table.

INT1IS.1~0	Selected Port Pin of nINT1
00	P3.3
01	P3.1
10	P1.7
11	P4.1

Bit 5~4: INT0IS.1~0, nINT0 input selection bits which function is defined as following table.

INT0IS.1~0	Selected Port Pin of nINT0
00	P3.2
01	P3.0
10	P1.6
11	P4.0

Bit 3: X3FLT, nINT3 Filter mode control. It selects nINT3 input filter mode with X3FLT1 (XICFG1.3)

X3FLT1, X3FLT	nINT3 input filter mode
00	Disabled
01	SYSCLK x 3
10	SYSCLK/6 x 3
11	T3OF x 3

Bit 2: X2FLT, nINT2 Filter mode control. It selects nINT2 input filter mode with X3FLT1 (XICFG1.2)

X2FLT1, X2FLT	nINT2 input filter mode
00	Disabled
01	SYSCLK x 3
10	SYSCLK/6 x 3
11	T3OF x 3

Bit 1: X1FLT, nINT1 Filter mode control. It selects nINT1 input filter mode with X1FLT1 (XICFG1.1)

X1FLT1, X1FLT	nINT1 input filter mode
00	Disabled
01	SYSCLK x 3
10	SYSCLK/6 x 3
11	T3OF x 3

Bit 0: X0FLT, nINT0 Filter mode control. It selects nINT0 input filter mode with X0FLT1 (XICFG1.0)

X0FLT1, X0FLT	nINT0 input filter mode
00	Disabled
01	SYSCLK x 3
10	SYSCLK/6 x 3
11	T3OF x 3

XICFG1: External Interrupt Configured 1 Register

SFR Page = **1 only**

SFR Address = 0xC1 RESET = 0000-0000

7	6	5	4	3	2	1	0
INT3IS.1	INT3IS.0	INT2IS.1	INT2IS.0	X3FLT1	X2FLT1	X1FLT1	X0FLT1
R/W	**R/W**	**R/W**	**R/W**	**R/W**	**R/W**	**R/W**	**R/W**

Bit 7~6: INT3IS1~0, nINT3 input selection bits which function is defined as following table.

INT3IS.1~0	Selected Port Pin of nINT3
00	P4.2
01	P6.3
10	P1.5
11	P6.0

Bit 5~4: INT2IS1~0, nINT2 input selection bits which function is defined as following table.

INT2IS.1~0	Selected Port Pin of nINT2
00	P4.3
01	P6.2
10	P1.4
11	P6.1

Bit 3: X3FLT1, nINT3 Filter mode control. It selects nINT3 input filter mode with X3FLT (XICFG.3). Refer XICFG description for nINT3 input filter mode definition.

Bit 2: X2FLT1, nINT2 Filter mode control. It selects nINT2 input filter mode with X2FLT (XICFG.2). Refer XICFG description for nINT2 input filter mode definition.

Bit 1: X1FLT1, nINT1 Filter mode control. It selects nINT1 input filter mode with X1FLT (XICFG.1). Refer XICFG description for nINT1 input filter mode definition.

Bit 0: X0FLT1, nINT0 Filter mode control. It selects nINT0 input filter mode with X0FLT (XICFG.0). Refer XICFG description for nINT0 input filter mode definition.

SFIE: System Flag Interrupt Enable Register

SFR Page = 0~F

SFR Address = 0x8E RESET = 0110-X000

7	6	5	4	3	2	1	0
SIDFIE	MCDRE	MCDFIE	RTCFIE	--	BOF1IE	BOF0IE	WDTFIE
R/W	**R/W**	**R/W**	**R/W**	**W**	**R/W**	**R/W**	**R/W**

Bit 7: SIDFIE, Serial Interface Detection Flag Interrupt Enabled.
0: Disable SIDF(STAF or STOF) interrupt.
1: Enable SIDF(STAF or STOF) interrupt to share the system flag interrupt.

Bit 6: MCDRE, Enable Missing-Clock-Detection event causes a system reset.
0: Disable MCD event to trigger a system Reset.
1: Enable MCD event to trigger a system Reset.

Bit 5: MCDFIE, Enable MCDF (PCON1.5) Interrupt.

0: Disable MCDF interrupt.
1: Enable MCD module and enable MCDF interrupt.

Bit 4: RTCFIE, Enable RTCF (PCON1.4) Interrupt.
0: Disable RTCF interrupt.
1: Enable RTCF interrupt.

Bit 3: Reserved. Software must write “0” on this bit when SFIE is written.

Bit 2: BOF1IE, Enable BOF1 (PCON1.2) Interrupt.
0: Disable BOF1 interrupt.
1: Enable BOF1 interrupt.

Bit 1: BOF0IE, Enable BOF0 (PCON1.1) Interrupt.
0: Disable BOF0 interrupt.
1: Enable BOF0 interrupt.

Bit 0: WDTFIE, Enable WDTF (PCON1.0) Interrupt.
0: Disable WDTF interrupt.
1: Enable WDTF interrupt.

PCON1: Power Control Register 1

SFR Page = 0~F & P
SFR Address = 0x97 POR = 0010-X000

7	6	5	4	3	2	1	0
SWRF	EXRF	MCDF	RTCF	--	BOF1	BOF0	WDTF
R/W	**R/W**	**R/W**	**R/W**	**W**	**R/W**	**R/W**	**R/W**

Bit 7: SWRF, Software Reset Flag.
0: This bit must be cleared by software writing **“1”** to it.
1: This bit is set by hardware if a Software Reset occurs.

Bit 6: EXRF, External Reset Flag.
0: This bit must be cleared by software writing **“1”** to it.
1: This bit is set by hardware if an External Reset occurs.

Bit 5: MCDF. (under verify)

Bit 4: RTCF, RTC overflow flag.
0: This bit must be cleared by software writing **“1”** on it. Software writing “:0” is no operation.
1: This bit is only set by hardware when RTCCT overflows. Writing **“1”** on this bit will clear RTCF.

Bit 3: Reserved. Software must write “0” on this bit when PCON1 is written.

Bit 2: BOF1, Brown-Out Detection flag 1.
0: This bit must be cleared by software writing **“1”** to it.
1: This bit is set by hardware if the operating voltage matches the detection level of Brown-Out Detector 1 (4.2V/3.7/2.4/2.0).

Bit 1: BOF0, Brown-Out Detection flag 0.
0: This bit must be cleared by software writing **“1”** to it.
1: This bit is set by hardware if the operating voltage matches the detection level of Brown-Out Detector 0 (2.2V).

Bit 0: WDTF, WDT overflow flag.
0: This bit must be cleared by software writing **“1”** to it.
1: This bit is set by hardware if a WDT overflow occurs.

AUXR3: Auxiliary Register 3

SFR Page = 0 only

SFR Address = 0xA4 RESET = 0000-0000

7	6	5	4	3	2	1	0
STAF	STOF	BPOC1	BPOC0	ALEPS0	TWIPS1	TWIPS0	T2PS0
R/W	**R/W**	**R/W**	**R/W**	**R/W**	**R/W**	**R/W**	**R/W**

Bit 7: STAF, Start Flag detection of SID(STWI).
0: Clear by firmware by writing “0” on it.
1: Set by hardware to indicate the START condition occurred on STWI bus.

Bit 6: STOF, Stop Flag detection of STWI (SID).
0: Clear by firmware by writing “0” on it.
1: Set by hardware to indicate the STOP condition occurred on STWI bus.

15. Timers/Counters

MG82FG5C64 has five 16-bit Timers/Counters: Timer 0, Timer 1, Timer 2, Timer 3 and Timer 4. All of them can be configured as timers or event counters.

In the “timer” function, the timer rate is prescaled by 12 clock cycle to increase register value. In other words, it is to count the standard C51 machine cycle. AUXR2.T0X12, AUXR2.T1X12 and T2MOD.T2X12 are the function for Timer 0/1/2 to set the timer rate on every clock cycle. It performs at a speed 12 times than standard C51 timer function. Additional prescaler value, SYSCLK/48 and SYSCLK/192, can be selected by combining AUXR0.T0XL and T0X12 for Timer 0 clock input.

In the “counter” function, the register is increased in response to a 1-to-0 transition at its corresponding external input pin, T0, T1, T2, T3 or T4. In this function, the external input is sampled by every timer rate cycle. When the samples show a high in one cycle and a low in the next cycle, the count is incremented. The new count value appears in the register at the end of the cycle following the one in which the transition was detected.

15.1. Timer 0 and Timer 1

15.1.1. Timer 0/1 Mode 0

The timer register is configured as a PWM generator. As the count rolls over from all 1s to all 0s, it sets the timer interrupt flag TFx. The counted input is enabled to the timer when TRx = 1 and either GATE=0 or INTx = 1. Mode 0 operation is the same for Timer0 and Timer1. The PWM function of Timer 0/1 is shown in Figure 15–1 and Figure 15–2.

Figure 15–1. Timer 0 Mode 0 Structure

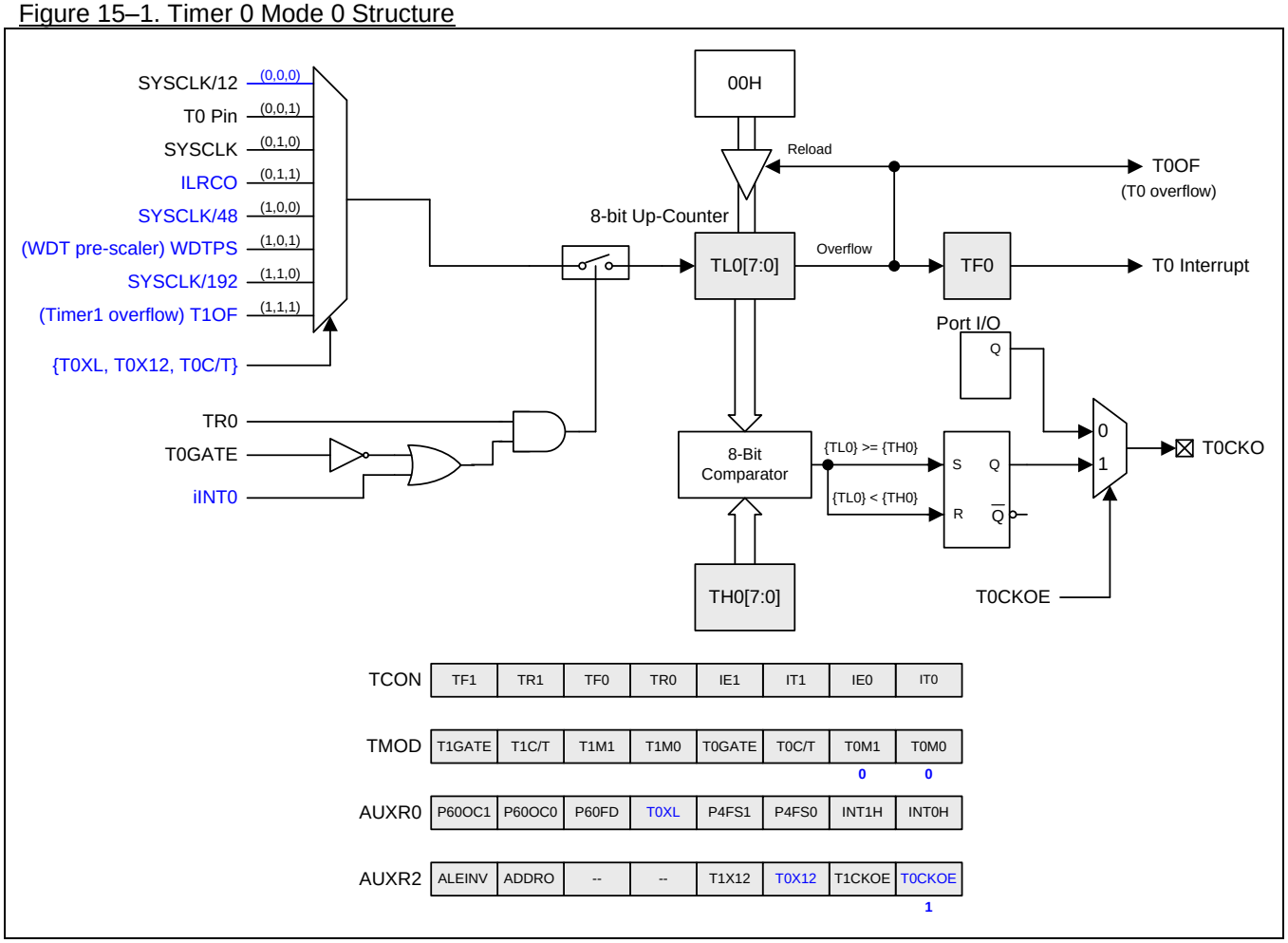

Figure 15–2. Timer 1 Mode 0 Structure

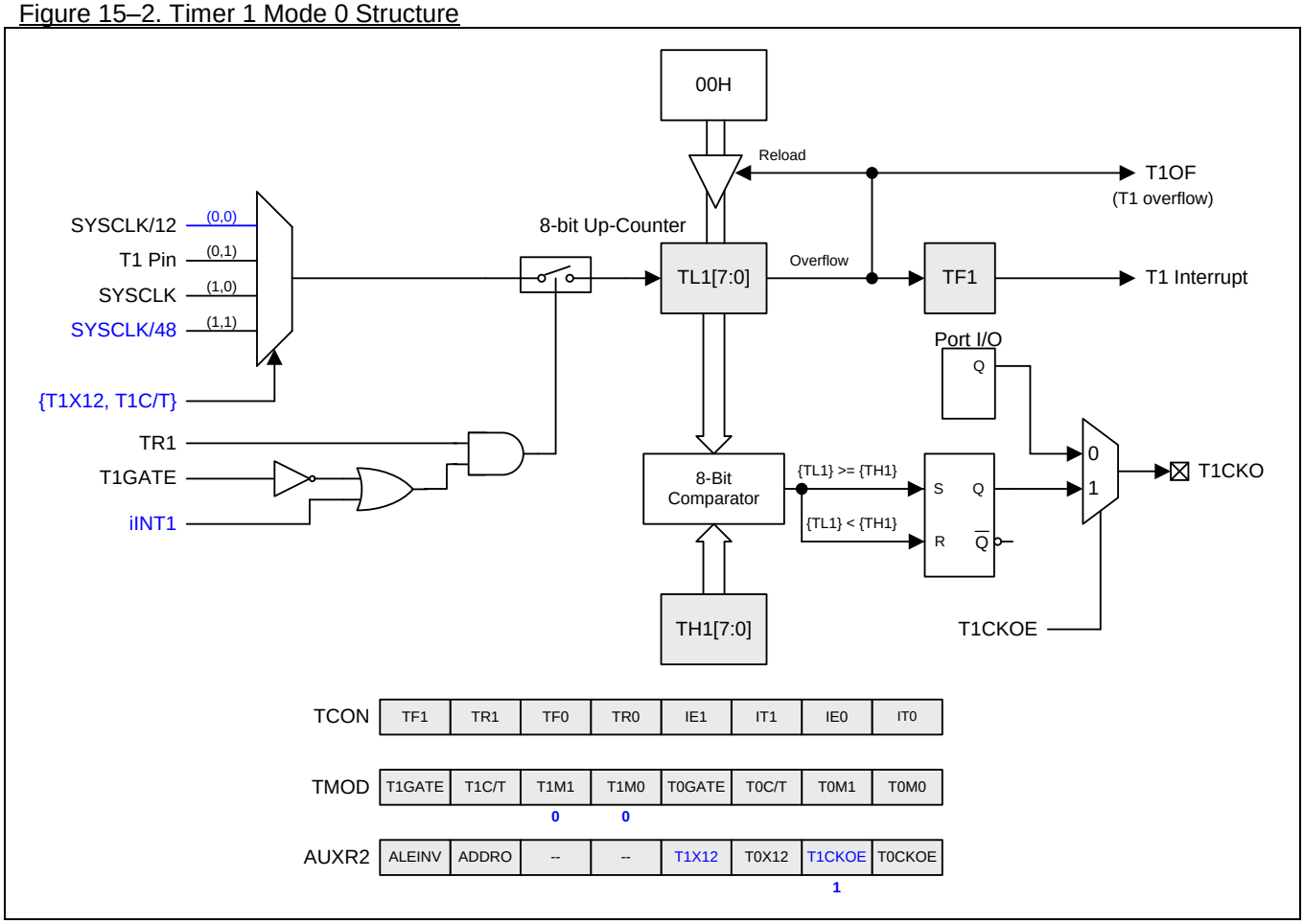

15.1.2. Timer 0/1 Mode 1

Timer 0/1 in Mode1 is configured as a 16 bit timer or counter. The function of GATE, INTx and TRx is same as mode 0. Figure 15–3 and Figure 15–4 show the mode 1 structure of Timer 0 and Timer 1.

Figure 15–3. Timer 0 Mode 1 Structure

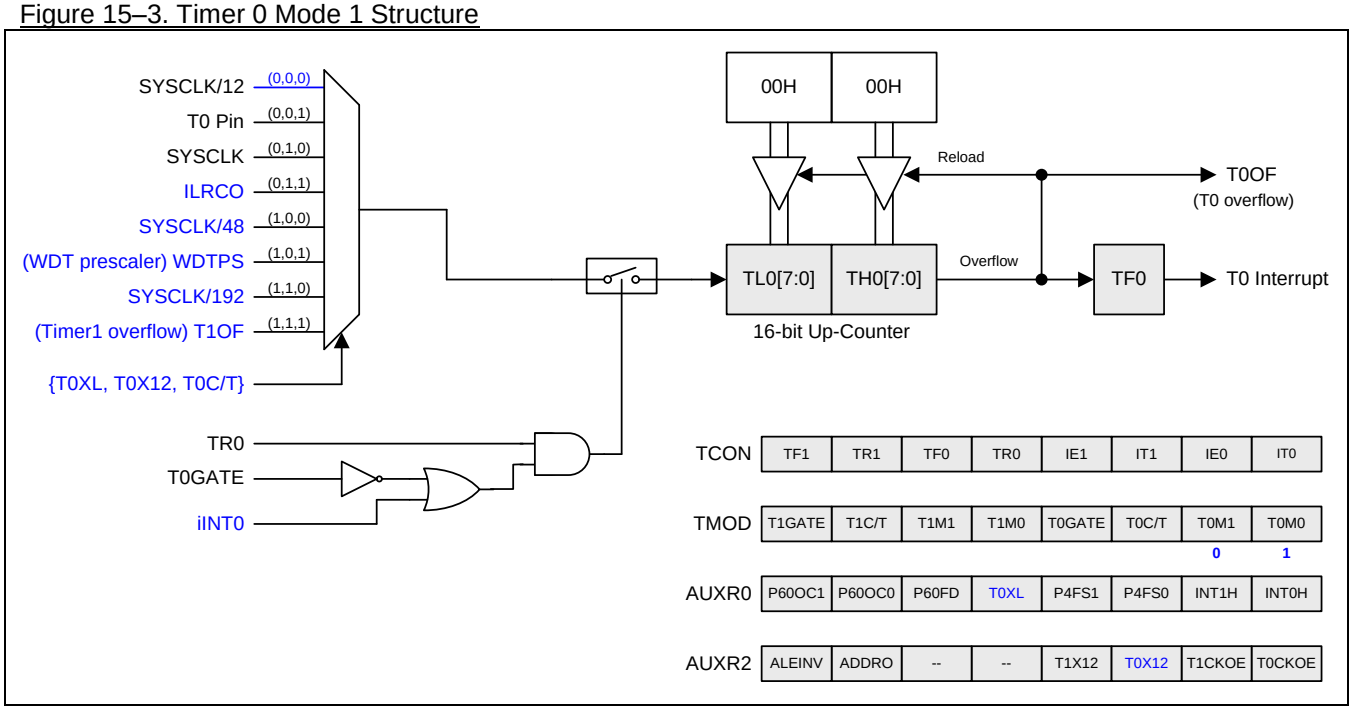

Figure 15–4. Timer 1 Mode 1 Structure

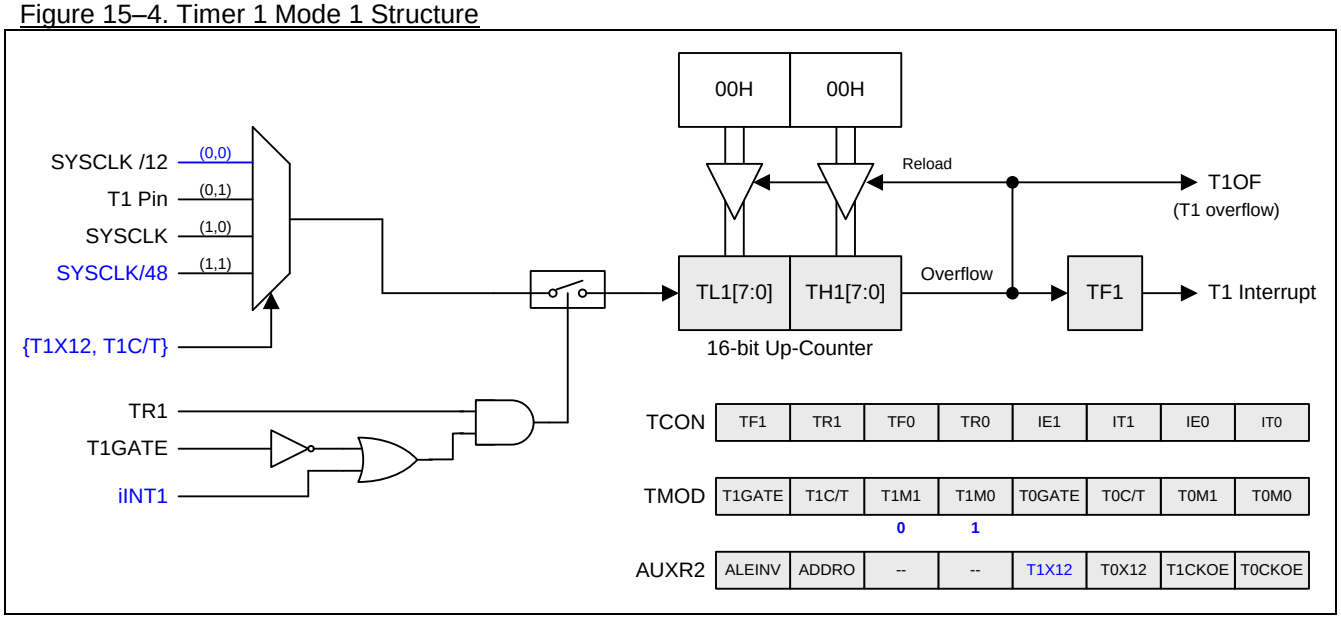

15.1.3. Timer 0/1 Mode 2

Mode 2 configures the timer register as an 8-bit counter(TLx) with automatic reload. Overflow from TLx not only set TFx, but also reload TLx with the content of THx, which is determined by software. The reload leaves THx unchanged. Mode 2 operation is the same for Timer0 and Timer1. Figure 15–5 and Figure 15–6 show the mode 2 structure of Timer 0 and Timer 1.

Figure 15–5. Timer 0 Mode 2 Structure

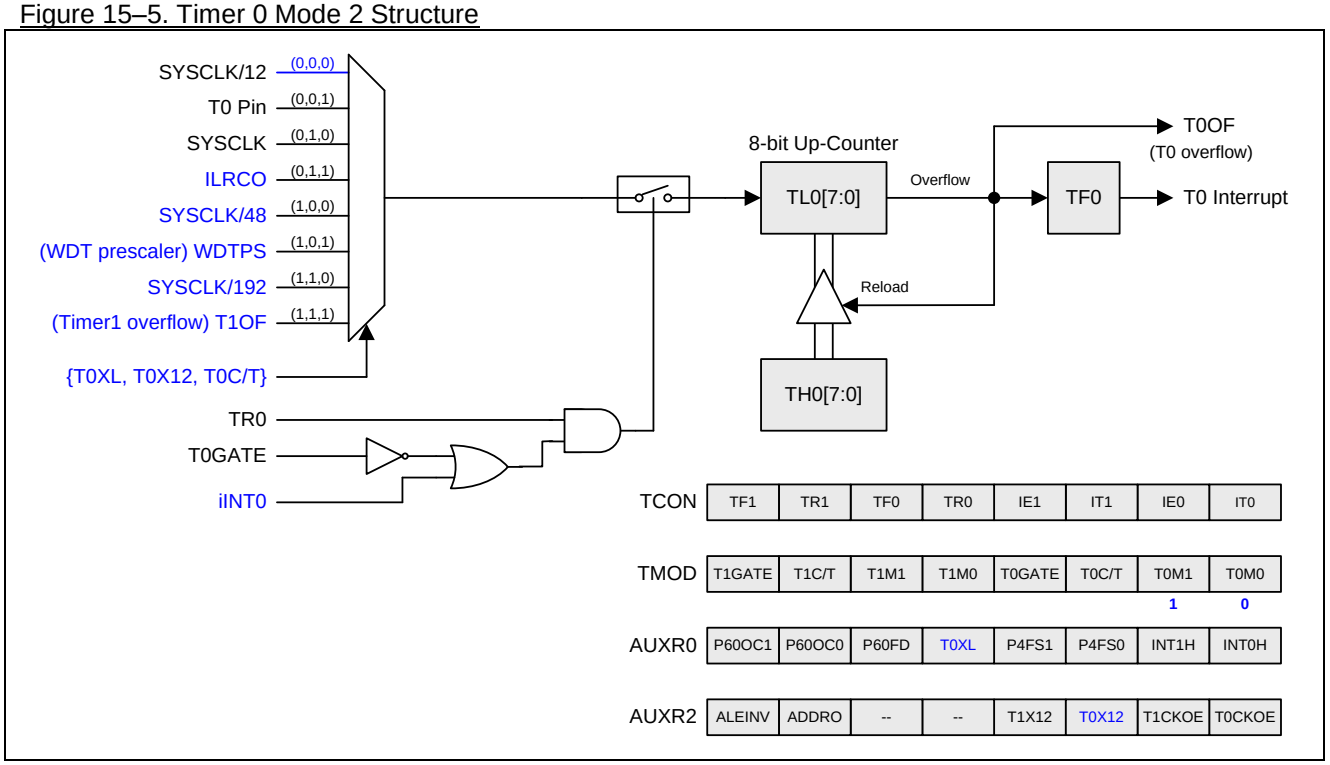

Figure 15–6. Timer 1 Mode 2 Structure

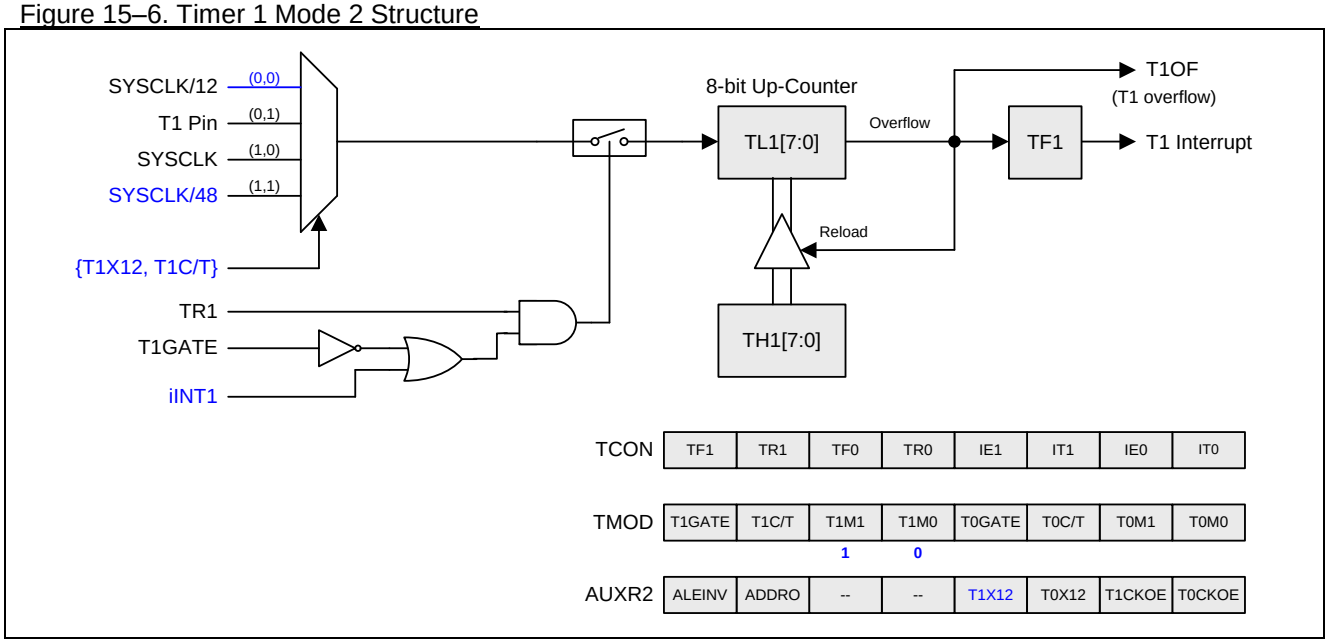

15.1.4. Timer 0/1 Mode 3

Timer1 in Mode3 simply holds its count, the effect is the same as setting TR1 = 1. Timer0 in Mode 3 enables TL0 and TH0 as two separate 8-bit counters. TL0 uses the Timer0 control bits such like C/T, GATE, TR0, INT0 and TF0. TH0 is locked into a timer function (can not be external event counter) and take over the use of TR1, TF1 from Timer1. TH0 now controls the Timer1 interrupt. Figure 15–7 shows the mode 3 structure of Timer 0.

Figure 15–7. Timer 0 Mode 3 Structure

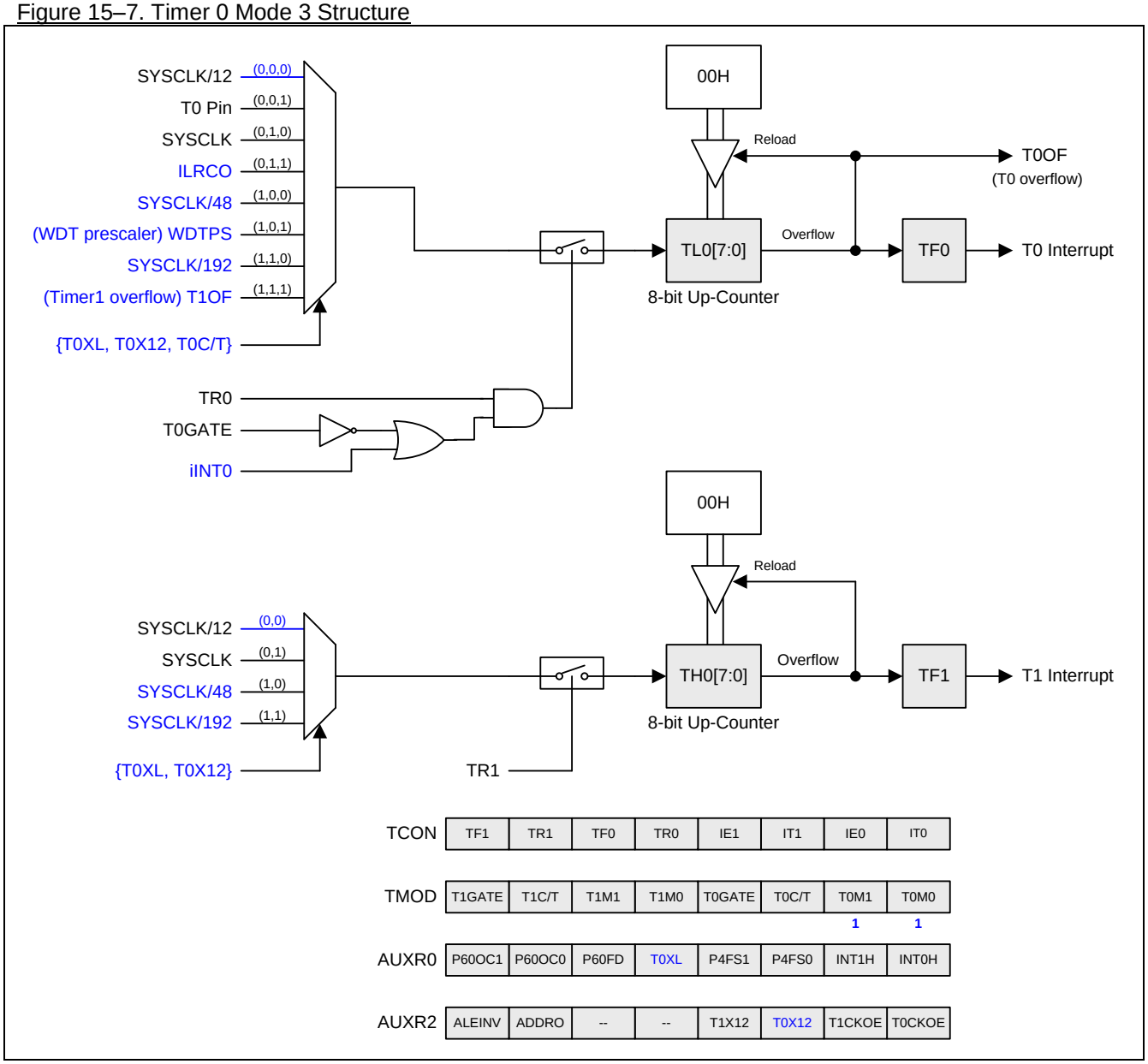

15.1.5. Timer 0/1 Programmable Clock-Out

Timer 0 and Timer 1 have a Clock-Out Mode (while TxCKOE=1). In this mode, Timer 0 or Timer 1 operates as 8-bit auto-reload timer for a programmable clock generator with 50% duty-cycle. The generated clocks come out on T0CKO (P3.4) and T1CKO (P3.5) individually. The input clock (SYSCLK/12, SYSCLK, SYSCLK/48 or SYSCLK/192) increases the 8-bit timer, TL0, in Timer 0 module. The input clock (SYSCLK/12 or SYSCLK) increases the 8-bit timer, TL1, in Timer 1 module. The timer repeatedly counts to overflow from a loaded value. Once overflows occur, the contents of (TH0 and TH1) are loaded into (TL0, TL1) for the consecutive counting. Figure 15–8 and Figure 15–9 formula gives the formula of Timer 0 and Timer 1 clock-out frequency. Figure 15–10 and Figure 15–11 show the clock-out structure of Timer 0 and Timer 1.

Figure 15–8. Timer 0 clock out equation

$$\text{T0 Clock-out Frequency} = \frac{\text{SYSCLK Frequency}}{n \times (256 - \text{THx})}$$

; n=24, if {T0XL,T0X12}=00
; n=2, if {T0XL,T0X12}=01
; n=96, if {T0XL,T0X12}=10
; n=384, if {T0XL,T0X12}=11
; C/T = 0

Figure 15–9. Timer 0 clock out equation

$$\text{T1 Clock-out Frequency} = \frac{\text{SYSCLK Frequency}}{n \times (256 - \text{TH1})}$$

; n=24, if T1X12=0
; n=2, if T1X12=1
; C/T = 0

Note:
(1) Timer 0/1 overflow flag, TF0/1, will be set when Timer 0/1 overflows but not generate interrupt.
(2) For SYSCLK=12MHz & TxX12=0, Timer 0/1 has a programmable output frequency range from 1.95KHz to 500KHz.
(3) For SYSCLK=12MHz & TxX12=1, Timer 0/1 has a programmable output frequency range from 23.43KHz to 6MHz.
(4) For SYSCLK=12MHz, T0X12=0 & T0XL=1, Timer 0 has a programmable output frequency range from 488Hz to 125KHz.
(5) For SYSCLK=12MHz, TxX12=1 & T0XL=1, Timer 0 has a programmable output frequency range from 122Hz to 31.25KHz.

Figure 15–10. Timer 0 in Clock Output Mode

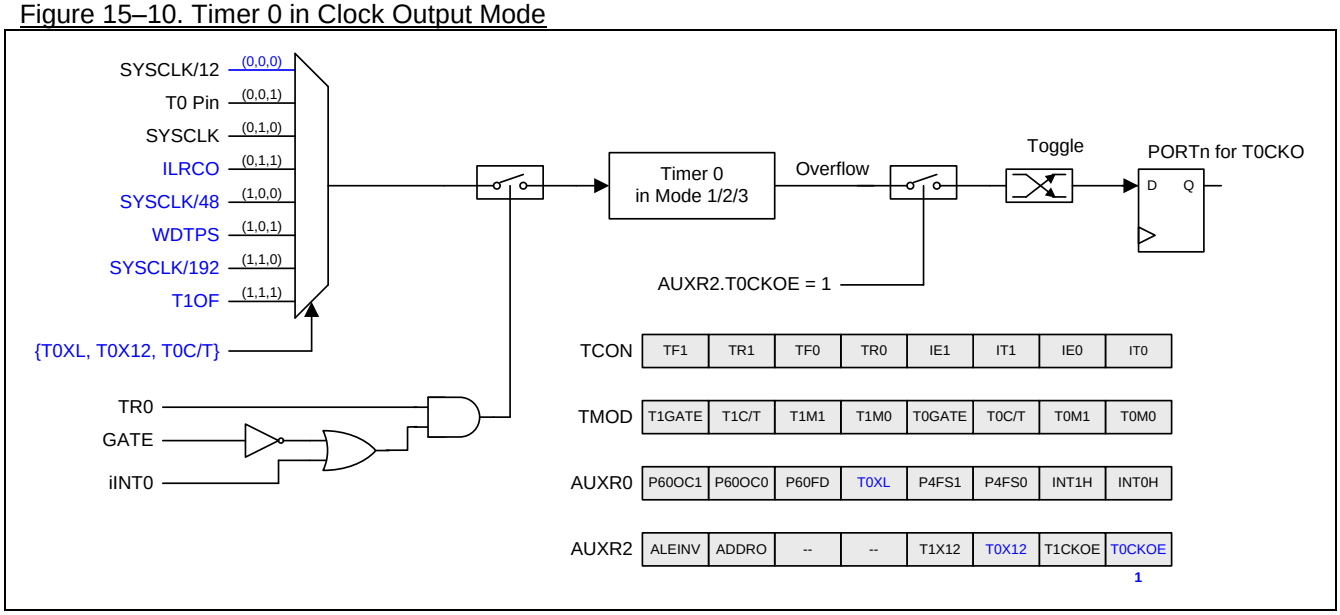

Figure 15–11. Timer 1 in Clock Output Mode

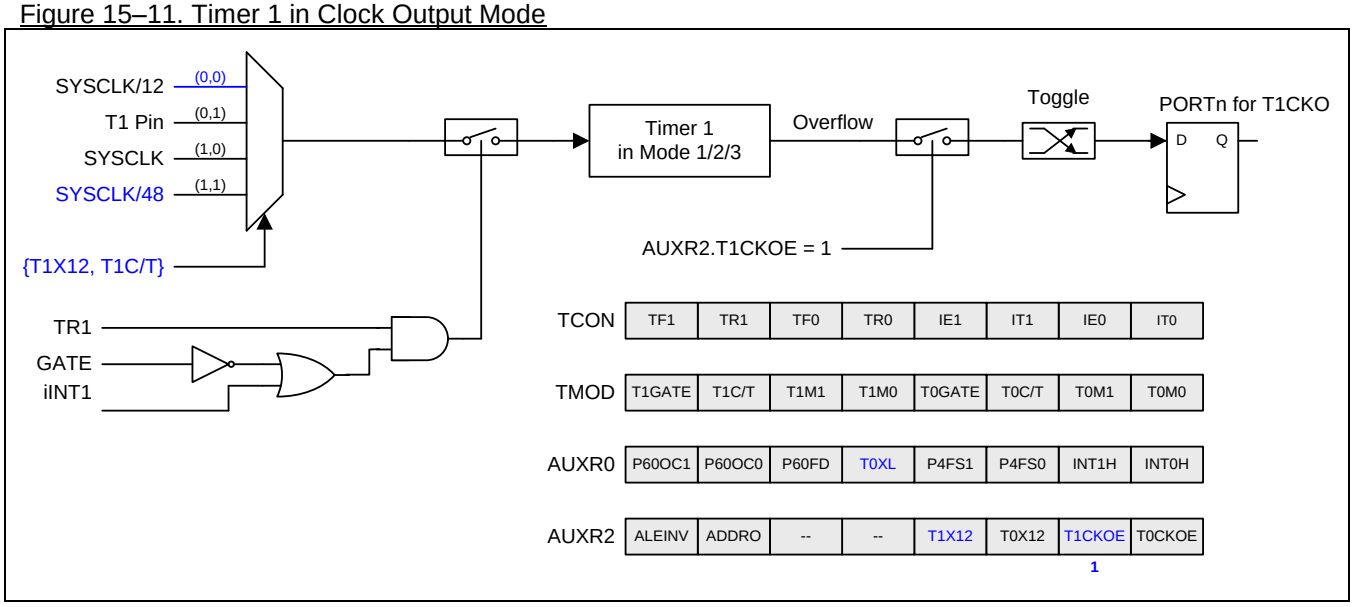

How to Program Timer 0/1 in Clock-out Mode

- Select AUXR2.T0X12 and AUXR0.T0XL bits decide the Timer 0 clock source. Or select T1X12 in AUXR2 register to decide the Timer 1 clock source.
- Set T0CKOE/T1CKOE bit in AUXR2 register.
- Clear C/T bit in TMOD register.
- Determine the 8-bit reload value from the formula and enter it in the TH0/TH1 register.
- Enter the same reload value as the initial value in the TL0/TL1 register.
- Set TR0/TR1 bit in TCON register to start the Timer 0/1.

In the Clock-Out mode, Timer 0/1 rollovers will not generate an interrupt. This is similar to when Timer 1 is used as a baud-rate generator. It is possible to use Timer 1 as a baud rate generator and a clock generator simultaneously. Note, however, that the baud-rate and the clock-out frequency depend on the same overflow rate of Timer 1.

15.1.6. Timer 0/1 Register

TCON: Timer/Counter Control Register

SFR Page = 0~F
SFR Address = 0x88 RESET = 0000-0000

7	6	5	4	3	2	1	0
TF1	TR1	TF0	TR0	IE1	IT1	IE0	IT0
R/W	**R/W**	**R/W**	**R/W**	**R/W**	**R/W**	**R/W**	**R/W**

Bit 7: TF1, Timer 1 overflow flag.
0: Cleared by hardware when the processor vectors to the interrupt routine, or cleared by software.
1: Set by hardware on Timer/Counter 1 overflow, or set by software.

Bit 6: TR1, Timer 1 Run control bit.
0: Disabled to stop Timer/Counter 1.
1: Enabled to start Timer/Counter 1.

Bit 5: TF0, Timer 0 overflow flag.
0: Cleared by hardware when the processor vectors to the interrupt routine, or cleared by software.
1: Set by hardware on Timer/Counter 0 overflow, or set by software.

Bit 4: TR0, Timer 0 Run control bit.
0: Disabled to stop Timer/Counter 0.
1: Enabled to start Timer/Counter 0.

TMOD: Timer/Counter Mode Control Register

SFR Page = 0~F
SFR Address = 0x89 RESET = 0000-0000

7	6	5	4	3	2	1	0
T1GATE	T1C/T	T1M1	T1M0	T0GATE	T0C/T	T0M1	T0M0
R/W	**R/W**	**R/W**	**R/W**	**R/W**	**R/W**	**R/W**	**R/W**
|←---------- Timer1 ----------→|				|←---------- Timer0 ----------→|		

Bit 7: T1Gate, Gating control for Timer1.
0: Disable gating control for Timer1.
1: Enable gating control for Timer1. When set, Timer1 or Counter1 is enabled only when iINT1 input is high and TR1 control bit is set.

Bit 6: T1C/T, Timer 1 clock source selector. It controls the Timer 1 as timer or counter with 4 clock sources. Refer to T1X12 description in the AUXR2.

Bit 5~4: Operating mode selection.

M1	**M0**	**Operating Mode**
0	0	8-bit PWM generator for Timer1
0	1	16-bit timer/counter for Timer1
1	0	8-bit timer/counter with automatic reload for Timer1
1	1 (Timer1)	Timer/Counter1 Stopped

Bit 3: T0Gate, Gating control for Timer0.
0: Disable gating control for Timer0.
1: Enable gating control for Timer0. When set, Timer0 or Counter0 is enabled only when iINT0 input is high and TR0 control bit is set.

Bit 6: T0C/T, Timer 0 clock source selector. It controls the Timer 0 as timer or counter with 8 clock sources. Refer to T0X12 description in the AUXR2.

Bit 1~0: Operating mode selection.

M1	**M0**	**Operating Mode**
0	0	8-bit PWM generator for Timer0
0	1	16-bit timer/counter for Timer0

1 0 8-bit timer/counter with automatic reload for Timer0
1 1 (Timer0) TL0 is 8-bit timer/counter, TH0 is locked into 8-bit timer

TL0: Timer 0 Low byte Register

SFR Page = 0~F
SFR Address = 0x8A RESET = 0000-0000

7	6	5	4	3	2	1	0
TL0.7	TL0.6	TL0.5	TL0.4	TL0.3	TL0.2	TL0.1	TL0.0
R/W	R/W	R/W	R/W	R/W	R/W	R/W	R/W

TH0: Timer 0 High byte Register

SFR Page = 0~F
SFR Address = 0x8C RESET = 0000-0000

7	6	5	4	3	2	1	0
TH0.7	TH0.6	TH0.5	TH0.4	TH0.3	TH0.2	TH0.1	TH0.0
R/W	R/W	R/W	R/W	R/W	R/W	R/W	R/W

TL1: Timer 1 Low byte Register

SFR Page = 0~F
SFR Address = 0x8B RESET = 0000-0000

7	6	5	4	3	2	1	0
TL1.7	TL1.6	TL1.5	TL1.4	TL1.3	TL1.2	TL1.1	TL1.0
R/W	R/W	R/W	R/W	R/W	R/W	R/W	R/W

TH1: Timer 1 High byte Register

SFR Page = 0~F
SFR Address = 0x8D RESET = 0000-0000

7	6	5	4	3	2	1	0
TH1.7	TH1.6	TH1.5	TH1.4	TH1.3	TH1.2	TH1.1	TH1.0
R/W	R/W	R/W	R/W	R/W	R/W	R/W	R/W

AUXR2: Auxiliary Register 2

SFR Page = 0~F
SFR Address = 0xA3 RESET = 0000-0000

7	6	5	4	3	2	1	0
ALEINV	ADDRO	--	--	T1X12	T0X12	T1CKOE	T0CKOE
R/W	R/W	R/W	R/W	R/W	R/W	R/W	R/W

Bit 3: T1X12, Timer 1 clock source control with T1C/T.

T1X12, T1C/T	Timer 1 Clock Selection
0 0	SYSCLK/12
0 1	T1 Pin
1 0	SYSCLK
1 1	SYSCLK/48

Bit 2: T0X12, Timer 0 clock source control with T0C/T and T0XL. **The input source duration…..**

T0XL, T0X12, T0C/T	Timer 0 Clock Selection
0 0 0	SYSCLK/12
0 0 1	T0 Pin
0 1 0	SYSCLK
0 1 1	ILRCO
1 0 0	SYSCLK/48
1 0 1	WDTPS
1 1 0	SYSCLK/192
1 1 1	T1OF

Bit 1: T1CKOE, Timer 1 Clock Output Enable.
0: Disable Timer 1 clock output.
1: Enable Timer 1 clock output on P3.5.

Bit 0: T0CKOE, Timer 0 Clock Output Enable.
0: Disable Timer 0 clock output.
1: Enable Timer 0 clock output on P3.4.

TREN0: Timer Run Enalbe Register 0

SFR Page = **1 Only**
SFR Address = 0x95 RESET= 0000-0000

7	6	5	4	3	2	1	0
TR4LE	TR3LE	TR2LE	TR4E	TR3E	TR2E	TR1E	TR0E
R/W	**R/W**	**R/W**	**R/W**	**R/W**	**R/W**	**R/W**	**R/W**

Bit 1, TR1E, write “1” on this bit to set TR1 enabled (TR1=1). This bit is auto-cleared by hardware after writing “1” operation. Write “0” on this bit is no action.

Bit 0, TR0E, write “1” on this bit to set TR0 enabled (TR0=1). This bit is auto-cleared by hardware after writing “1” operation. Write “0” on this bit is no action.

TRLC0: Timer Reload Control Register 0

SFR Page = **2 Only**
SFR Address = 0x95 RESET= 0000-0000

7	6	5	4	3	2	1	0
TL4RLC	TL3RLC	TL2RLC	T4RLC	T3RLC	T2RLC	T1RLC	T0RLC
R/W	**R/W**	**R/W**	**R/W**	**R/W**	**R/W**	**R/W**	**R/W**

Bit 1, T1RLC, write “1” on this bit to force TH1/TL1 reload condition happened. This bit is auto-cleared by hardware after writing “1” operation. Write “0” on this bit is no action.

Bit 0, T0RLC, write “1” on this bit to force TH0/TL0 reload condition happened. This bit is auto-cleared by hardware after writing “1” operation. Write “0” on this bit is no action.

TSPC0: Timer Stop Control Register 0

SFR Page = **3 Only**
SFR Address = 0x95 RESET= 0000-0000

7	6	5	4	3	2	1	0
TL4SC	TL3SC	TL2SC	T4SC	T3SC	T2SC	T1SC	T0SC
R/W	**R/W**	**R/W**	**R/W**	**R/W**	**R/W**	**R/W**	**R/W**

Bit 1, T1SC, write “1” on this bit to set TR1 disabled (TR1=0). This bit is auto-cleared by hardware after writing “1” operation. Write “0” on this bit is no action.

Bit 0, T0SC, write “1” on this bit to set TR0 disabled (TR0=0). This bit is auto-cleared by hardware after writing “1” operation. Write “0” on this bit is no action.

AUXR1: Auxiliary Control Register 1

SFR Page = 0~F

SFR Address = 0xA2 POR+RESET = 0000-0000

7	6	5	4	3	2	1	0
KBIPS1	KBIPS0	SPIPS0	S1PS1	S1PS0	T01PS0	EXTRAM	DPS
R/W	R/W	R/W	R/W	R/W	R/W	R/W	R/W

Bit 2: T01PS0, Timer0/1 Port Selection 0.

T01PS0	T0/T0CKO	T1/T1CKO
0	P3.4	P3.5
1	P5.5	P5.6

AUXR0: Auxiliary Register 0

SFR Page = 0~F

SFR Address = 0xA1 RESET = 000X-0000

7	6	5	4	3	2	1	0
P60OC1	P60OC0	P60FD	T0XL	P4FS1	P4FS0	INT1H	INT0H
R/W	R/W	R/W	R/W	R/W	R/W	R/W	R/W

Bit 3~2: P4.4 and P4.5 alternated function selection.

P4FS[1:0]	P4.4	P4.5
00	P4.4	P4.5
01	RXD0	TXD0
10	T0/T0CKO	T1/T1CKO
11	T2EX	T2/T2CKO

15.2. Timer 2

Timer 2 is a 16-bit Timer/Counter which can operate either as a timer or an event counter, as selected by C/T2 in T2CON register. Timer 2 has four operating modes: Capture, Auto-Reload (up or down counting), Baud Rate Generator and Programmable Clock-Out, which are selected by bits in the T2CON and T2MOD registers.

15.2.1. Timer 2 Mode 0 (Auto-Reload and External Interrupt)

The auto-reload and external interrupt mode is illustrated in Figure 15–12.

Figure 15–12. Timer 2 Mode 0 Structure (Auto-Reload and Exteranl Interrupt Mode)

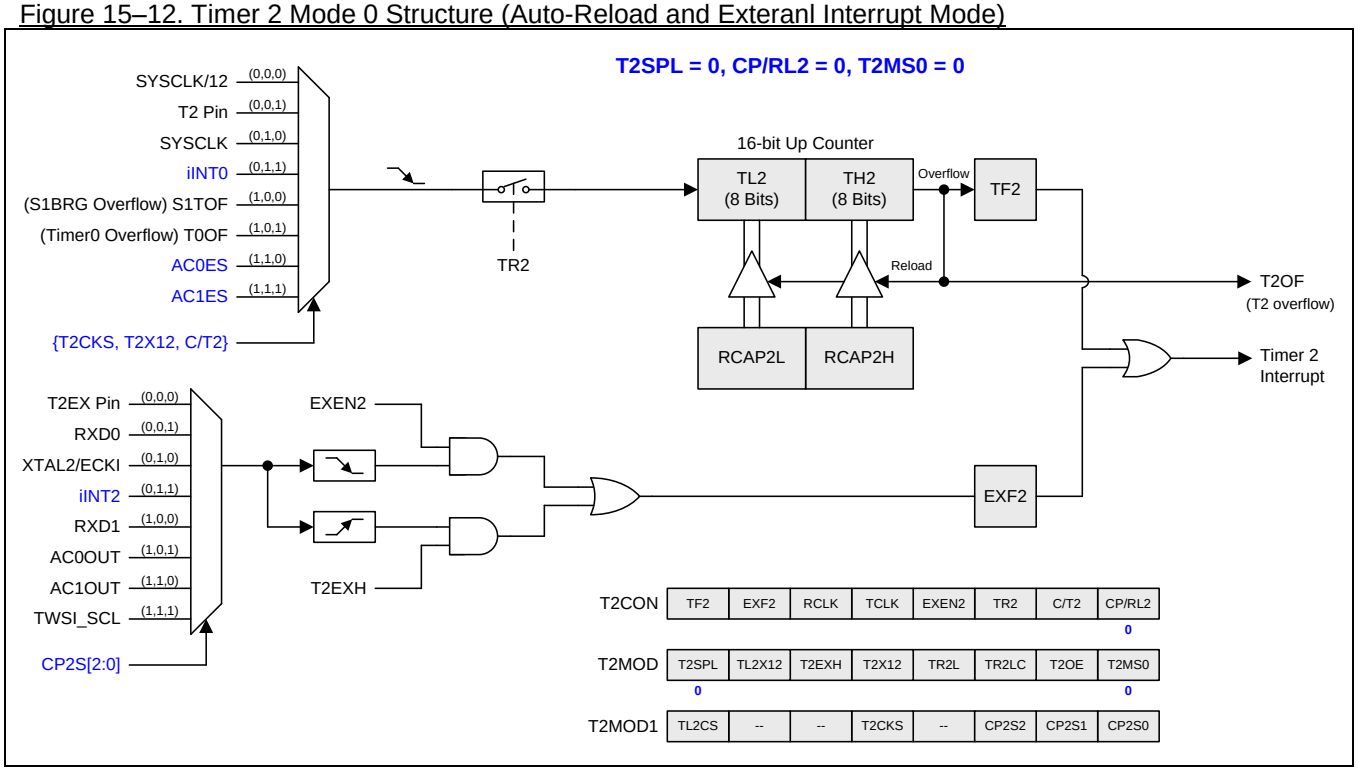

15.2.2. Timer 2 Mode 1 (Auto-Reload with External Interrupt)

Figure 15–13 shows auto-reload with external interrupt mode.

Figure 15–13. Timer 2 Mode 1 Structure (Auto-Reload with External Interrupt Mode)

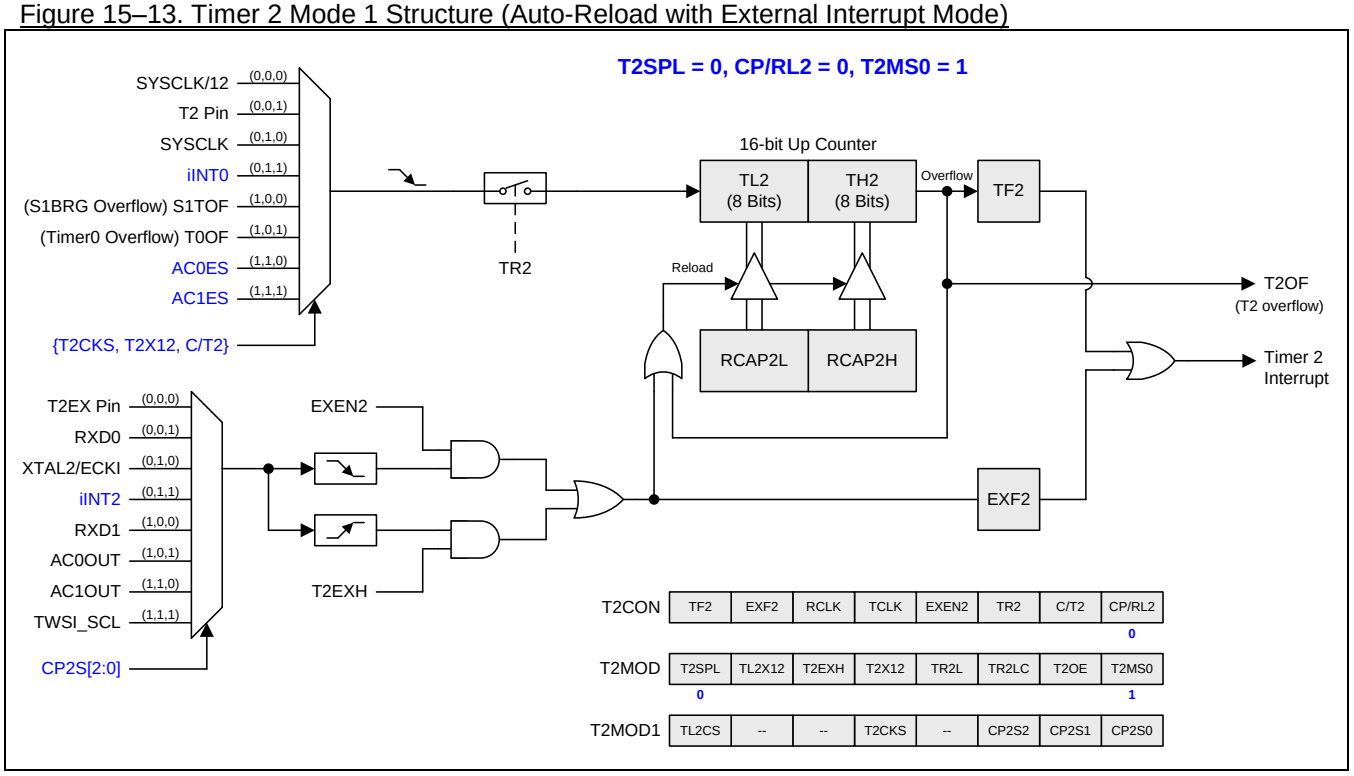

15.2.3. Timer 2 Mode 2 (Capture)

Figure 15–14 shows capture mode in Timer 2.

Figure 15–14. Timer 2 Mode 2 Structure (Capture Mode)

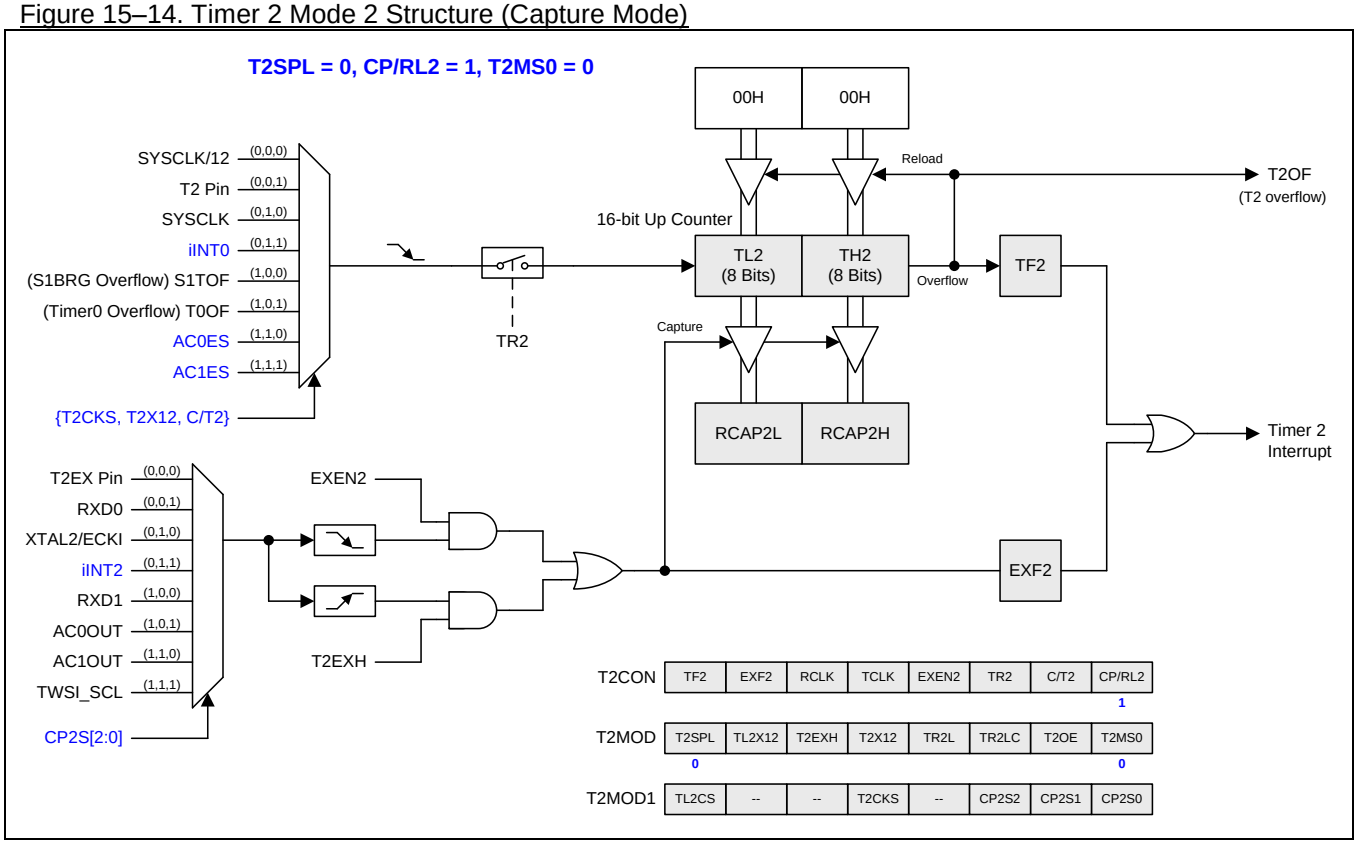

15.2.4. Timer 2 Mode 3 (Capture with Auto-Zero)

Figure 15–15 shows capture mode in Timer 2.

Figure 15–15. Timer 2 Mode 3 Structure (Capture with Auto-Zero on TL2 & TH2)

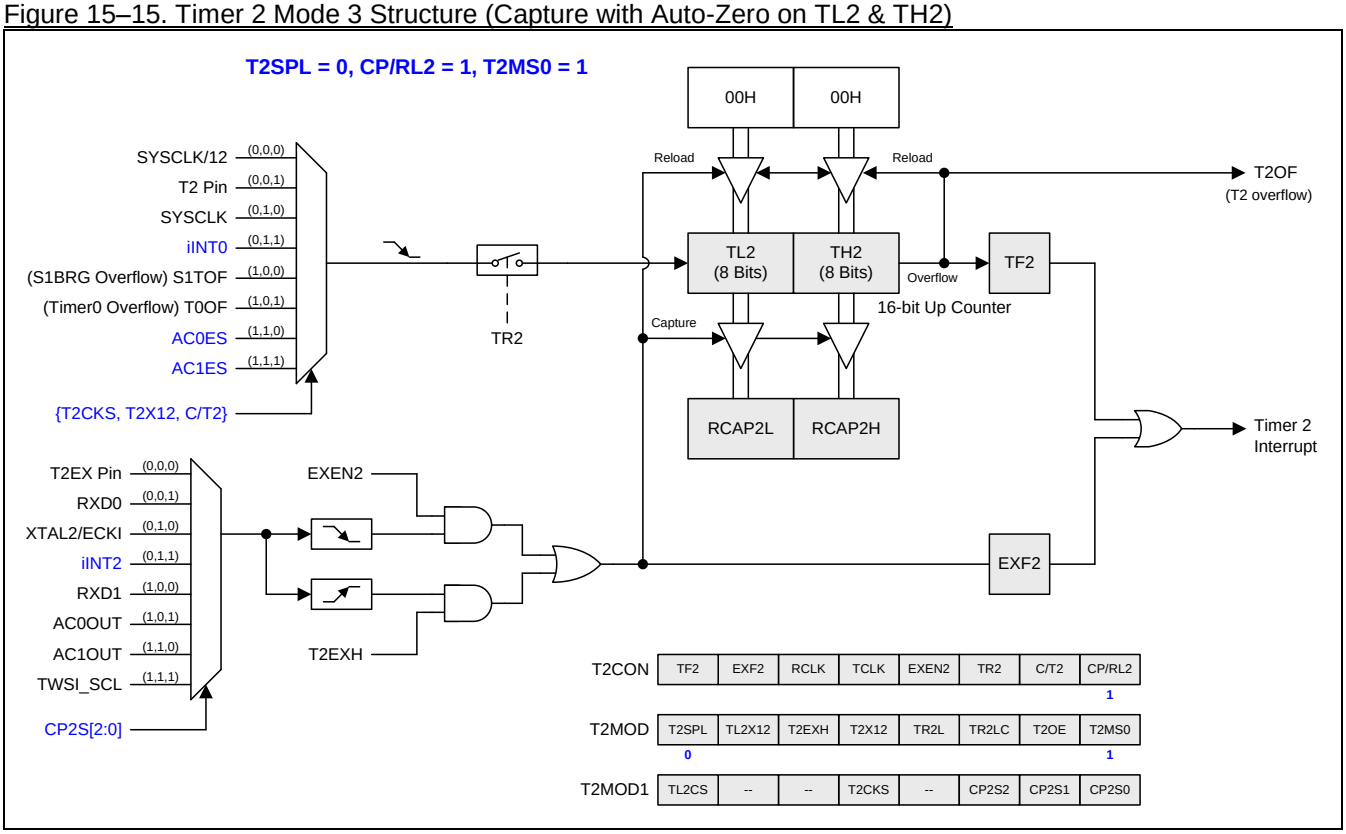

15.2.5. Split Timer 2 Mode 0 (AR and Ex. INT)

Figure 15–16. Split Timer 2 Mode 0 Structure (AR and Ex. INT)

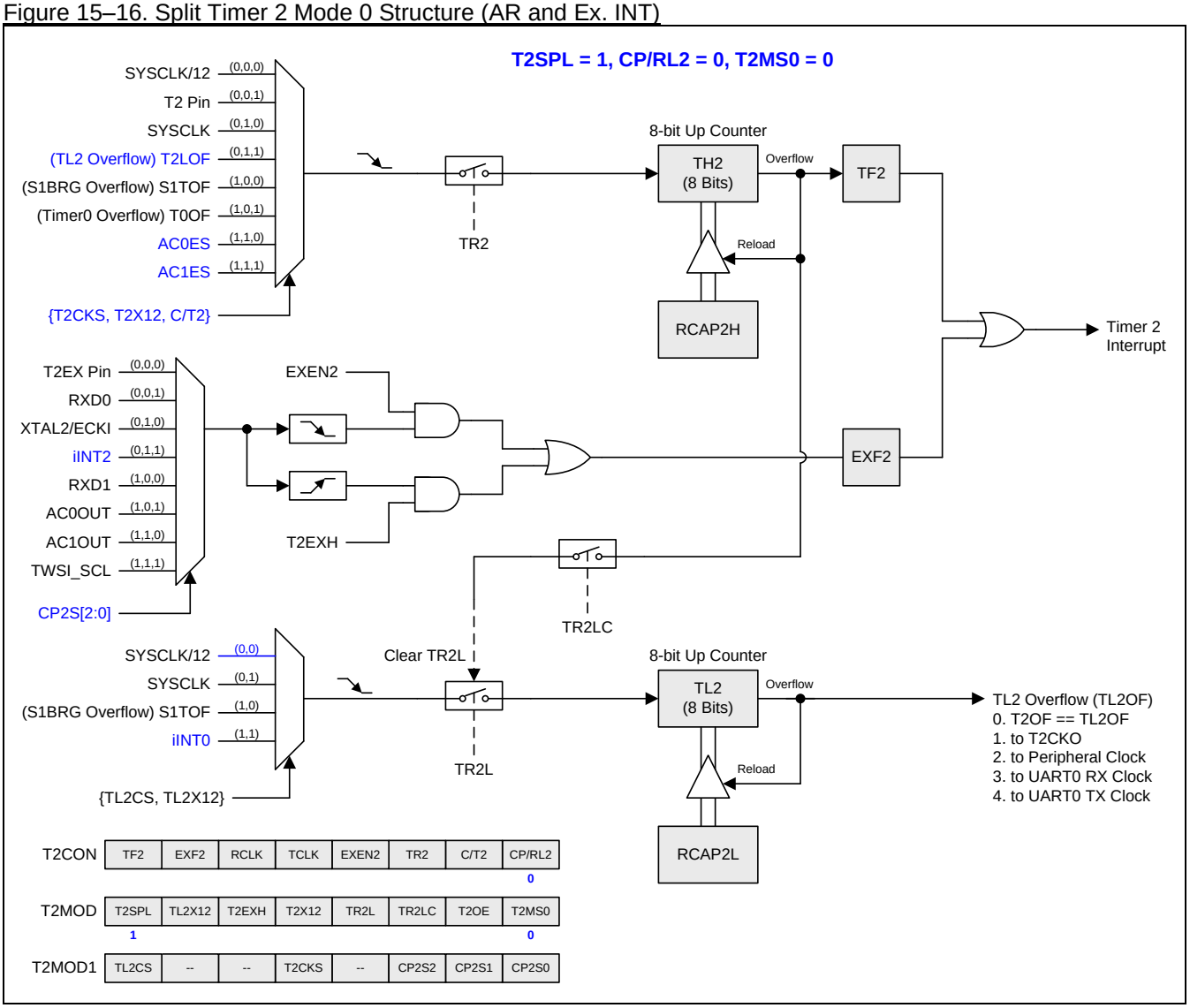

15.2.6. Split Timer 2 Mode 1 (AR with Ex. INT)

Figure 15–17. Split Timer 2 Mode 1 Structure (AR with Ex. INT)

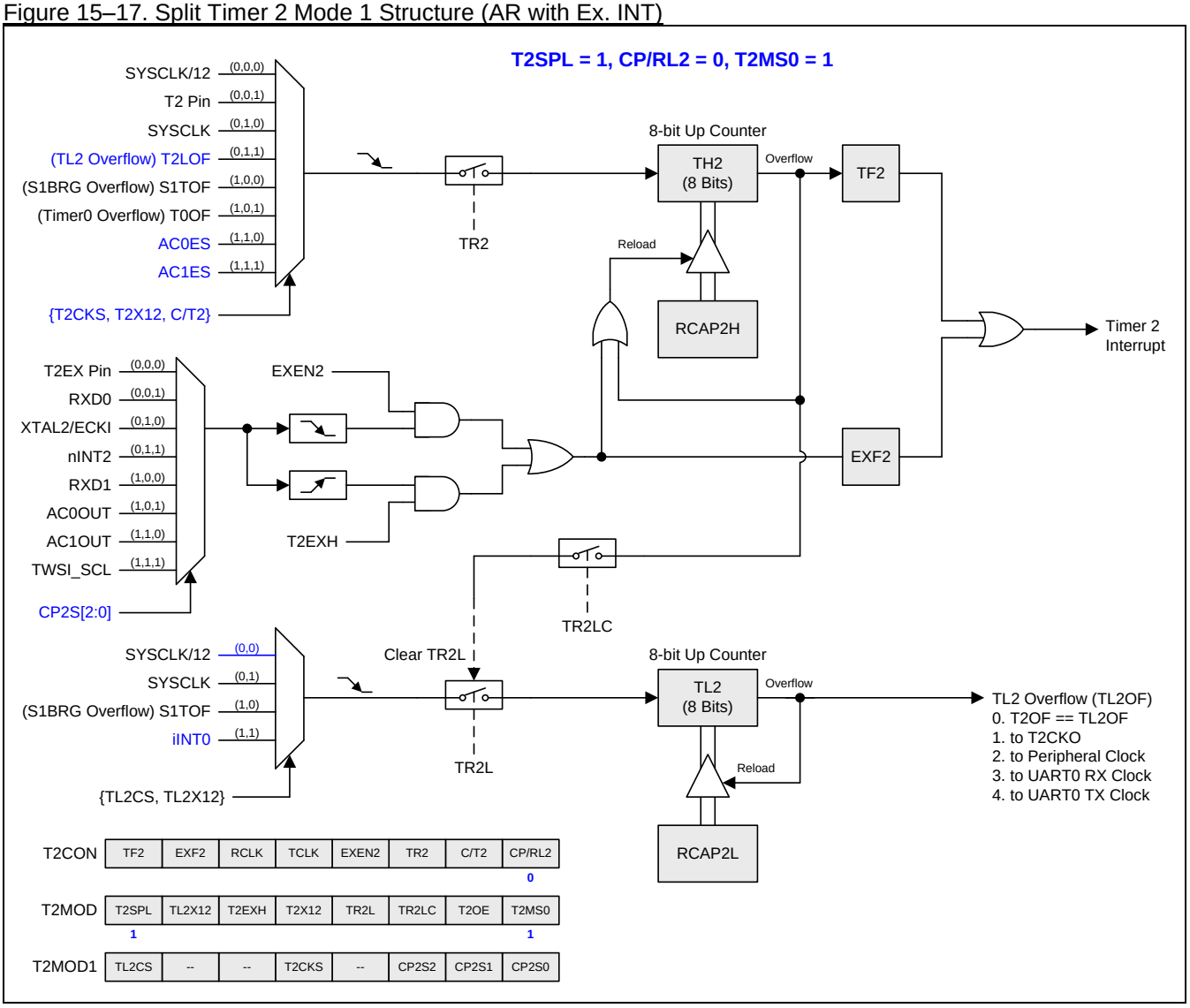

15.2.7. Split Timer 2 Mode 2 (Capture)

Figure 15–18. Split Timer 2 Mode 2 Structure (Capture)

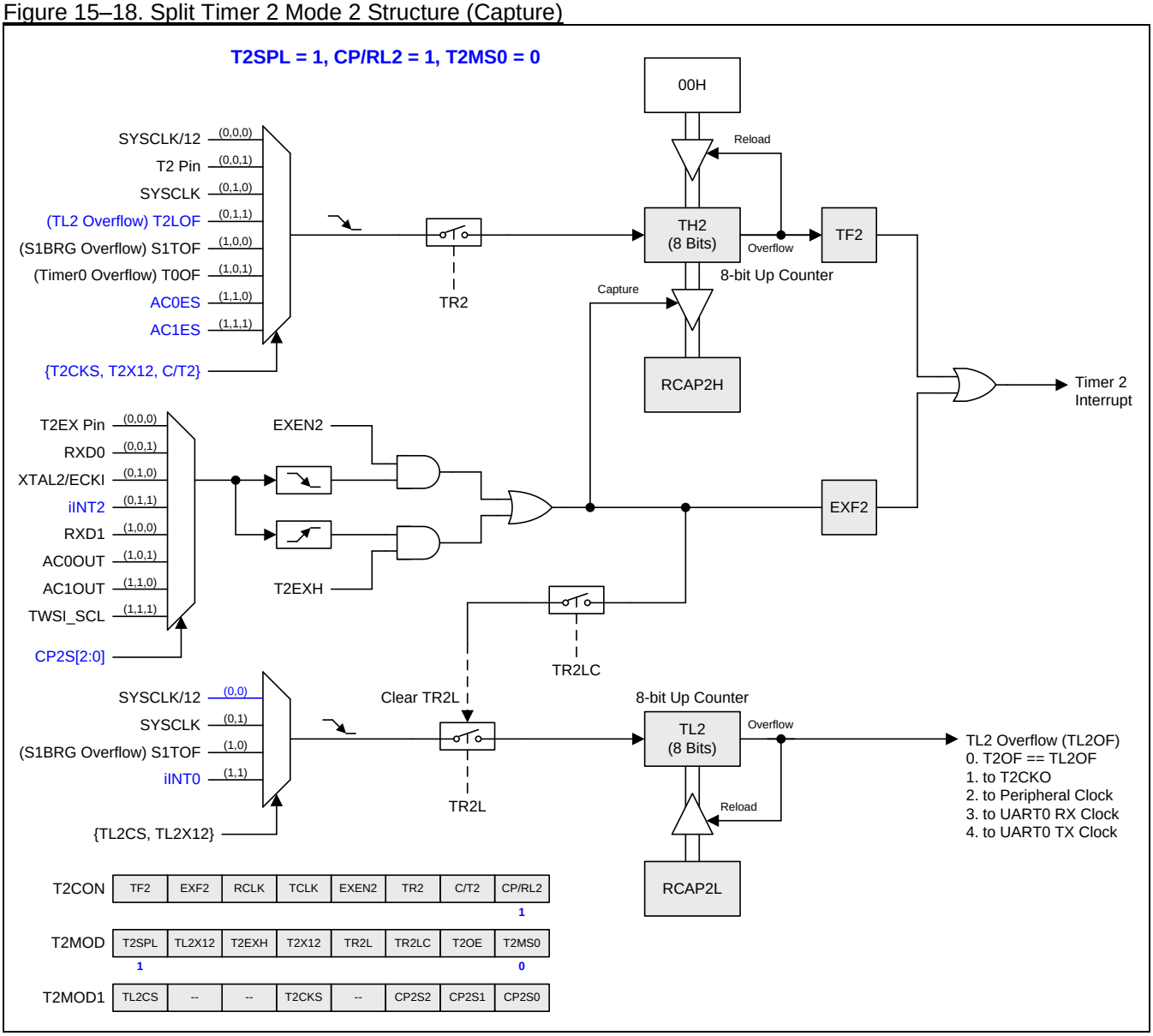

15.2.8. Split Timer 2 Mode 3 (Capture with Auto-Zero)

Figure 15–19. Split Timer 2 Mode 3 Structure (Capture with Auto-Zero on TH2)

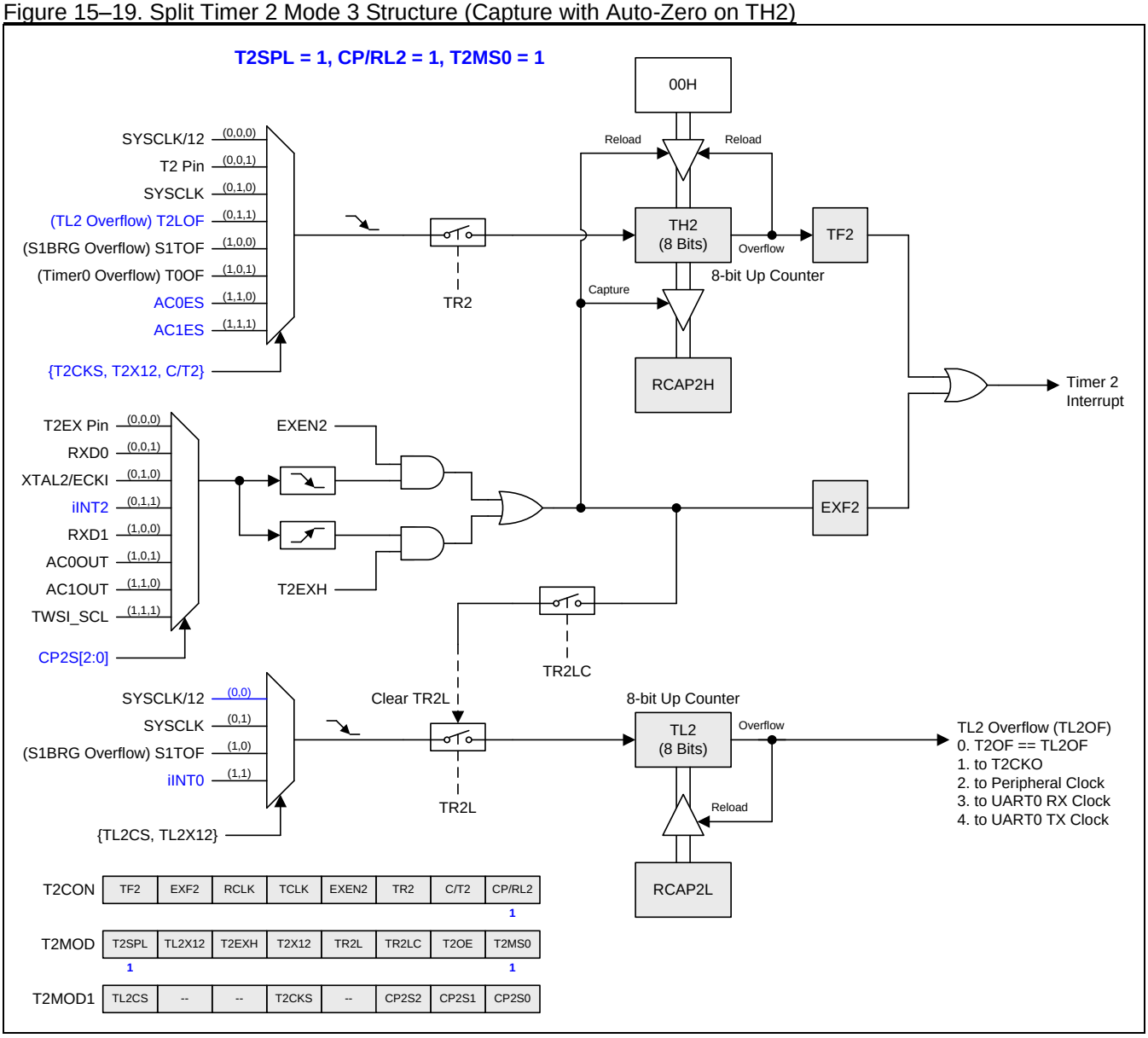

15.2.9. Baud-Rate Generator Mode (BRG)

Bits TCLK and/or RCLK in T2CON register allow the serial port transmit and receive baud rates to be derived from either Timer 1 or Timer 2. When TCLK=0, Timer 1 is used as the serial port transmit baud rate generator. When TCLK= 1, Timer 2 is used as the serial port transmit baud rate generator. RCLK has the same effect for the serial port receive baud rate. With these two bits, the serial port can have different receive and transmit baud rates – one generated by Timer 1, the other by Timer 2.

Figure 15–20 shows the Timer 2 in baud rate generation mode to generate RX Clock and TX Clock into UART engine (See Figure 18–6.). The baud rate generation mode is like the auto-reload mode, in that a rollover in TH2 causes the Timer 2 registers to be reloaded with the 16-bit value in registers RCAP2H and RCAP2L, which are preset by firmware.

The Timer 2 as a baud rate generator mode is valid only if RCLK and/or TCLK=1 in T2CON register. Note that a rollover in TH2 does not set TF2, and will not generate an interrupt. Thus, the Timer 2 interrupt does not have to be disabled when Timer 2 is in the baud rate generator mode. Also if the EXEN2 (T2 external enable bit) is set, a 1-to-0 transition in T2EX (Timer/counter 2 trigger input) will set EXF2 (T2 external flag) but will not cause a reload from (RCAP2H, RCAP2L) to (TH2,TL2). Therefore when Timer 2 is in use as a baud rate generator, T2EX can be used as an additional external interrupt, if needed.

When Timer 2 is in the baud rate generator mode, one should not try to read or write TH2 and TL2. As a baud rate generator, Timer 2 is incremented at 1/2 the system clock or asynchronously from pin T2; under these conditions, a read or write of TH2 or TL2 may not be accurate. The RCAP2 registers may be read, but should not be written to, because a write might overlap a reload and cause write and/or reload errors. The timer should be turned off (clear TR2) before accessing the Timer 2 or RCAP2 registers.

Note:

Refer to Section "18.7.3 Baud Rate in Mode 1 & 3" to get baud rate setting value when using Timer 2 as the baud rate generator.

Figure 15–20. Timer 2 in Baud-Rate Generator Mode

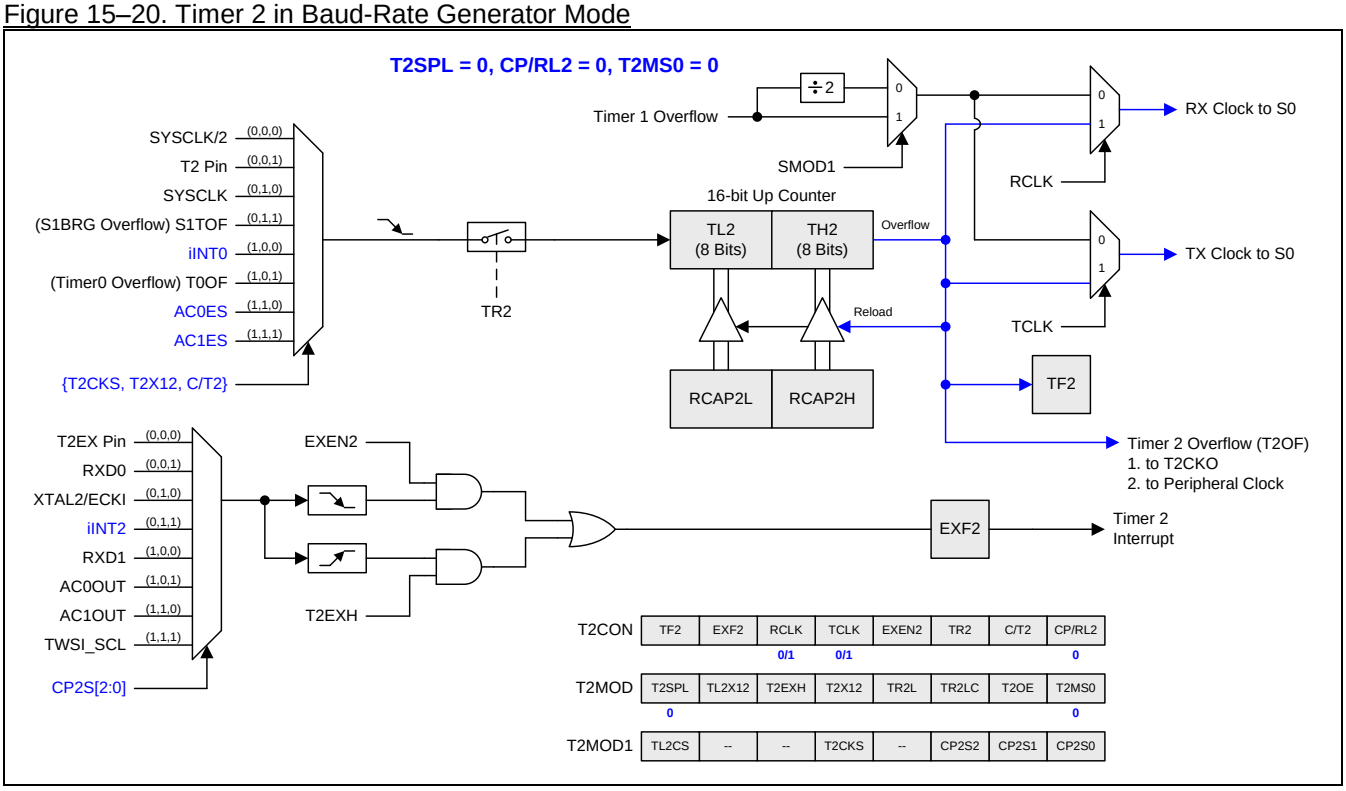

Figure 15–21. Split Timer 2 in Baud-Rate Generator Mode

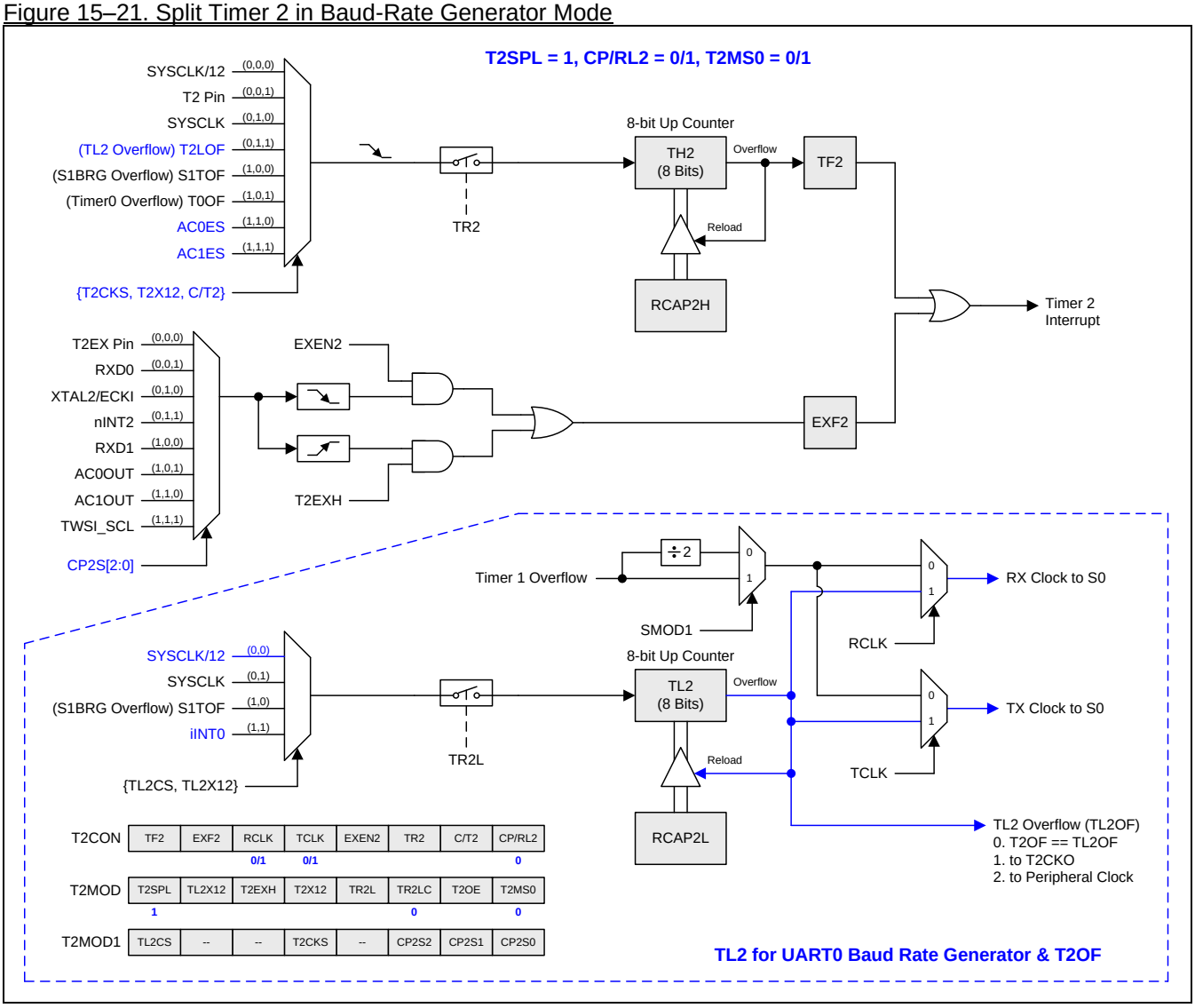

15.2.10. Timer 2 Programmable Clock Output

Timer 2 has a Clock-Out Mode (while CP/RL2=0 & T2OE=1). In this mode, Timer 2 operates as a programmable clock generator with 50% duty-cycle. The generated clocks come out on P1.0. The input clock (SYSCLK/2 or SYSCLK) increments the 16-bit timer (TH2, TL2). The timer repeatedly counts to overflow from a loaded value. Once overflows occur, the contents of (RCAP2H, RCAP2L) are loaded into (TH2, TL2) for the consecutive counting. Figure 15–22 gives the formula of Timer 2 clock-out frequency: Figure 15–23 shows the clock structure of Timer 2.

Figure 15–22. Timer 2 clock out equation

$$\text{T2 Clock-out Frequency} = \frac{\text{SYSCLK Frequency}}{n \times (65536 - (\text{RCAP2H, RCAP2L}))}$$; n=4, if T2X12=0 ; n=2, if T2X12=1

Note:
(1) Timer 2 overflow flag, TF2, will be set when Timer 2 overflows but not generate interrupt.
(2) For SYSCLK=12MHz & T2X12=0, Timer 2 has a programmable output frequency range from 45.7Hz to 3MHz.
(3) For SYSCLK=12MHz & T2X12=1, Timer 2 has a programmable output frequency range from 91.5Hz to 6MHz.

Figure 15–23. Timer 2 in Clock-Out Mode

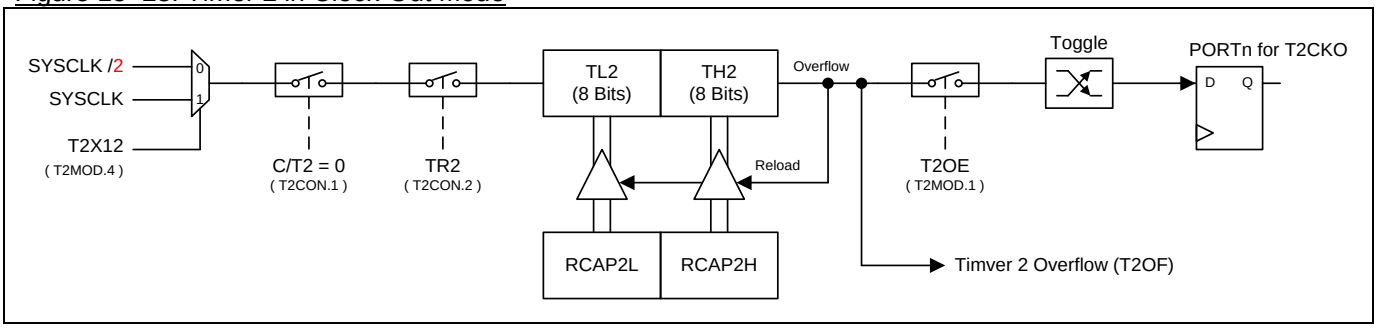

How to Program Timer 2 in Clock-out Mode

- Select T2X12 bit in T2MOD register to decide the Timer 2 clock source.
- Set T2OE bit in T2MOD register.
- Clear C/T2 bit in T2CON register.
- Determine the 16-bit reload value from the formula and enter it in the RCAP2H and RCAP2L registers.
- Enter the same reload value as the initial value in the TH2 and TL2 registers.
- Set TR2 bit in T2CON register to start the Timer 2.

In the Clock-Out mode, Timer 2 rollovers will not generate an interrupt. This is similar to when Timer 2 is used as a baud-rate generator. It is possible to use Timer 2 as a baud rate generator and a clock generator simultaneously. Note, however, that the baud-rate and the clock-out frequency depend on the same overflow rate of Timer 2.

15.2.11. Timer 2 Register

T2CON: Timer 2 Control Register

SFR Page = **0 Only**

SFR Address = 0xC8 RESET = 0000-0000

7	6	5	4	3	2	1	0
TF2	EXF2	RCLK	TCLK	EXEN2	TR2	C/T2	CP/RL2
R/W	**R/W**	**R/W**	**R/W**	**R/W**	**R/W**	**R/W**	**R/W**

Bit 7: TF2, Timer 2 overflow flag.
0: TF2 must be cleared by software.
1: TF2 is set by a Timer 2 overflow happens. TF2 will not be set when either RCLK=1 or TCLK=1.

Bit 6: EXF2, Timer 2 external flag.
0: EXF2 must be cleared by software.
1: Timer 2 external flag set when either a capture or reload is caused by a negative transition on T2EX pin and EXEN2=1 or a positive transition on T2EX and T2EXH=1. When Timer 2 interrupt is enabled, EXF2=1 will cause the CPU to vector to the Timer 2 interrupt routine.

Bit 5: RCLK, Receive clock flag.
0: Causes Timer 1 overflow to be used for the receive clock.
1: Causes the serial port to use Timer 2 overflow pulses for its receive clock in modes 1 and 3.

Bit 4: TCLK, Transmit clock flag.
0: Causes Timer 1 overflows to be used for the transmit clock.
1: Causes the serial port to use Timer 2 overflow pulses for its transmit clock in modes 1 and 3.

Bit 3: EXEN2, Timer 2 external enable flag on a negative transition of T2EX pin.
0: Cause Timer 2 to ignore negative transition events at T2EX pin.
1: Allows a capture or reload to occur as a result of a 1-to-0 transition on T2EX pin if Timer 2 is not being used to clock the serial port 0. If Timer 2 is configured to clock the serial port 0, the T2EX remains the external transition detection and reports on EXF2 flag with Timer 2 interrupt.

Bit 2: TR2, Timer 2 Run control bit. If in Timer 2 split mode, it only controls the TH2.
0: Disabled to stop the Timer/Counter 2.
1: Enabled to start the Timer/Counter 2.

Bit 1: C/T2, Timer 2 clock or counter source selector. The function is active with T2X12 and T2CKS as following definition:

T2CKS, T2X12, C/T2	Timer 2 Clock Selection	TH2 Clock Selection in split mode
0 0 0	SYSCLK/12	SYSCLK/12
0 0 1	T2 Pin	T2 Pin
0 1 0	SYSCLK	SYSCLK
0 1 1	iINT0	TL2OF
1 0 0	S1TOF	S1TOF
1 0 1	T0OF	T0OF
1 1 0	AC0ES	AC0ES
1 1 1	AC1ES	AC1ES

Bit 0: CP/RL2, Timer 2 mode control bit. Refer T2MOD.T2MS0 description for the function definition.

T2MOD: Timer 2 Mode Register

SFR Page = **0 Only**

SFR Address = 0xC9 RESET= 0000-0000

7	6	5	4	3	2	1	0
T2SPL	TL2X12	T2EXH	T2X12	TR2L	TR2LC	T2OE	T2MS0
R/W	**R/W**	**R/W**	**R/W**	**R/W**	**R/W**	**R/W**	**R/W**

Bit 7: T2SPL, Timer 2 split mode control.
0: Disable Timer 2 to split mode.
1: Enable Timer 2 to split mode.

Bit 6: TL2X12, the clock control bit of TL2 in Timer 2 split mode.

TL2CS, TL2X12	TL2 Clock Selection
0 0	SYSCLK/12
0 1	SYSCLK
1 0	S1TOF
1 1	iINT0

Bit 5: T2EXH, Timer 2 external enable flag on a positive transition of T2EX pin.
0: Cause Timer 2 to ignore positive transition events at T2EX pin.
1: Allows a capture or reload to occur as a result of a 0-to1 transition on T2EX pin if Timer 2 is not being used to clock the serial port 0. If Timer 2 is configured to clock the serial port 0, the T2EX remains the external transition detection and reports on EXF2 flag with Timer 2 interrupt.

Bit 4: T2X12, Timer 2 clock source selector. Refer to C/T2 description for the function defined.

Bit 3: TR2L, TL2 Run control bit in Timer 2 split mode.
0: Disabled to stop the TL2.
1: Enabled to start the TL2.

Bit 2: TR2LC, TR2L Cleared control.
0: Disabled the TR2L cleared by hardware event.
1: Enabled the TR2L cleared by the TH2 overflow (Timer 2 in mode 0/1) or capture input (Timer 2 in mode 2/3).

Bit 1: T2OE, Timer 2 clock-out enable bit.
0: Disable Timer 2 clock output.
1: Enable Timer 2 clock output.

Bit 0: T2MS0, Timer 2 mode select bit 0.

CP/RL2, T2MS0	Timer 2 Mode Selection
0 0	Mode 0: Auto-Reload and External Interrupt
0 1	Mode 1: Auto-Reload with External Interrupt
1 0	Mode 2: Capture mode
1 1	Mode 3: Capture with Auto-Zero on Timer 2

T2MOD1: Timer 2 Mode Register 1

SFR Page = **1 Only**

SFR Address = 0x93 RESET= 0XX0-X000

7	6	5	4	3	2	1	0
TL2CS	--	--	T2CK2	--	CP2S2	CP2S1	CP2S0
R/W	**W**	**W**	**R/W**	**W**	**R/W**	**R/W**	**R/W**

Bit 7: TL2CS. TL2 clock selection in Timer 2 split mode. Refer to T2MOD.TL2X12 description for the function defined.

Bit 6~5: Reserved. Software must write “0” on these bits when T2MOD1 is written.

Bit 4: T2CKS, Timer 2 clock selection. Refer to C/T2 description for the function defined.

Bit 3: Reserved. Software must write “0” on this bit when T2MOD1 is written.

Bit 2~0: CP2S.2~0. These bits define the capture source selector of Timer 2.

CP2S.2~0	Timer 2 Capture Source Selection
0 0 0	T2EX Pin
0 0 1	RXD0
0 1 0	XTAL2/ECKI
0 1 1	iINT2
1 0 0	RXD1
1 0 1	AC0OUT
1 1 0	AC1OUT
1 1 1	TWSI_SCL

TREN0: Timer Run Enalbe Register 0

SFR Page = **1 Only**

SFR Address = 0x95 RESET= 0000-0000

7	6	5	4	3	2	1	0
TR4LE	TR3LE	TR2LE	TR4E	TR3E	TR2E	TR1E	TR0E
R/W	**R/W**	**R/W**	**R/W**	**R/W**	**R/W**	**R/W**	**R/W**

Bit 5, TR2LE, write “1” on this bit to set TR2L enabled (TR2L=1) when Timer 2 in split mode. This bit is auto-cleared by hardware after writing “1” operation. Write “0” on this bit is no action.

Bit 2, TR2E, write “1” on this bit to set TR2 enabled (TR2=1). This bit is auto-cleared by hardware after writing “1” operation. Write “0” on this bit is no action.

TRLC0: Timer Reload Control Register 0

SFR Page = **2 Only**

SFR Address = 0x95 RESET= 0000-0000

7	6	5	4	3	2	1	0
TL4RLC	TL3RLC	TL2RLC	T4RLC	T3RLC	T2RLC	T1RLC	T0RLC
R/W	**R/W**	**R/W**	**R/W**	**R/W**	**R/W**	**R/W**	**R/W**

Bit 5, TL2RLC, write “1” on this bit to force TL2 reload condition happened when Timer 2 in split mode. This bit is auto-cleared by hardware after writing “1” operation. Write “0” on this bit is no action.

Bit 2, T2RLC, write “1” on this bit to force TH2 and TL2 reload condition happened when Timer 2 not in split mode. Or force TH2 reload condition happened when Timer 2 in split mode. This bit is auto-cleared by hardware after writing “1” operation. Write “0” on this bit is no action.

TSPC0: Timer Stop Control Register 0

SFR Page = **3 Only**

SFR Address = 0x95 RESET= 0000-0000

7	6	5	4	3	2	1	0
TL4SC	TL3SC	TL2SC	T4SC	T3SC	T2SC	T1SC	T0SC
R/W	**R/W**	**R/W**	**R/W**	**R/W**	**R/W**	**R/W**	**R/W**

Bit 5, TL2SC, write “1” on this bit to set TR2L disabled (TR2L=0) when Timer 2 in split mode. This bit is auto-cleared by hardware after writing “1” operation. Write “0” on this bit is no action.

Bit 2, T2SC, write “1” on this bit to set TR2 disabled (TR2=0). This bit is auto-cleared by hardware after writing “1” operation. Write “0” on this bit is no action.

TL2: Timer 2 Low byte Register

SFR Page = **0 Only**

SFR Address = 0xCC RESET = 0000-0000

7	6	5	4	3	2	1	0
TL2.7	TL2.6	TL2.5	TL2.4	TL2.3	TL2.2	TL2.1	TL2.0
R/W	**R/W**	**R/W**	**R/W**	**R/W**	**R/W**	**R/W**	**R/W**

TH2: Timer 2 High byte Register

SFR Page = **0 Only**

SFR Address = 0xCD RESET = 0000-0000

7	6	5	4	3	2	1	0
TH2.7	TH2.6	TH2.5	TH2.4	TH2.3	TH2.2	TH2.1	TH2.0
R/W	**R/W**	**R/W**	**R/W**	**R/W**	**R/W**	**R/W**	**R/W**

RCAP2L: Timer 2 Capture Low byte Register

SFR Page = **0 Only**

SFR Address = 0xCA RESET = 0000-0000

7	6	5	4	3	2	1	0
RCAP2L.7	RCAP2L.6	RCAP2L.5	RCAP2L.4	RCAP2L.3	RCAP2L.2	RCAP2L.1	RCAP2L.1
R/W	**R/W**	**R/W**	**R/W**	**R/W**	**R/W**	**R/W**	**R/W**

RCAP2H: Timer 2 Capture High byte Register

SFR Page = **0 Only**

SFR Address = 0xCB RESET = 0000-0000

7	6	5	4	3	2	1	0
RCAP2H.7	RCAP2H.6	RCAP2H.5	RCAP2H.4	RCAP2H.3	RCAP2H.2	RCAP2H.1	RCAP2H.0
R/W	**R/W**	**R/W**	**R/W**	**R/W**	**R/W**	**R/W**	**R/W**

AUXR3: Auxiliary Register 3

SFR Page = 0 only

SFR Address = 0xA4 RESET = 0000-0000

7	6	5	4	3	2	1	0
STAF	STOF	BPOC1	BPOC0	ALEPS0	TWIPS1	TWIPS0	T2PS0
R/W	**R/W**	**R/W**	**R/W**	**R/W**	**R/W**	**R/W**	**R/W**

Bit 0: T2PS0, Timer 2 Port Selection 0.

T2PS0	T2/T2CKO	T2EX
0	P1.0	P1.1
1	P3.6	P3.7

15.3. Timer 3

15.3.1. Timer 3 Mode 0 (Auto-Reload and External Interrupt)

Figure 15–24. Timer 3 Mode 0 Structure (Auto-Reload and Exteranl Interrupt Mode)

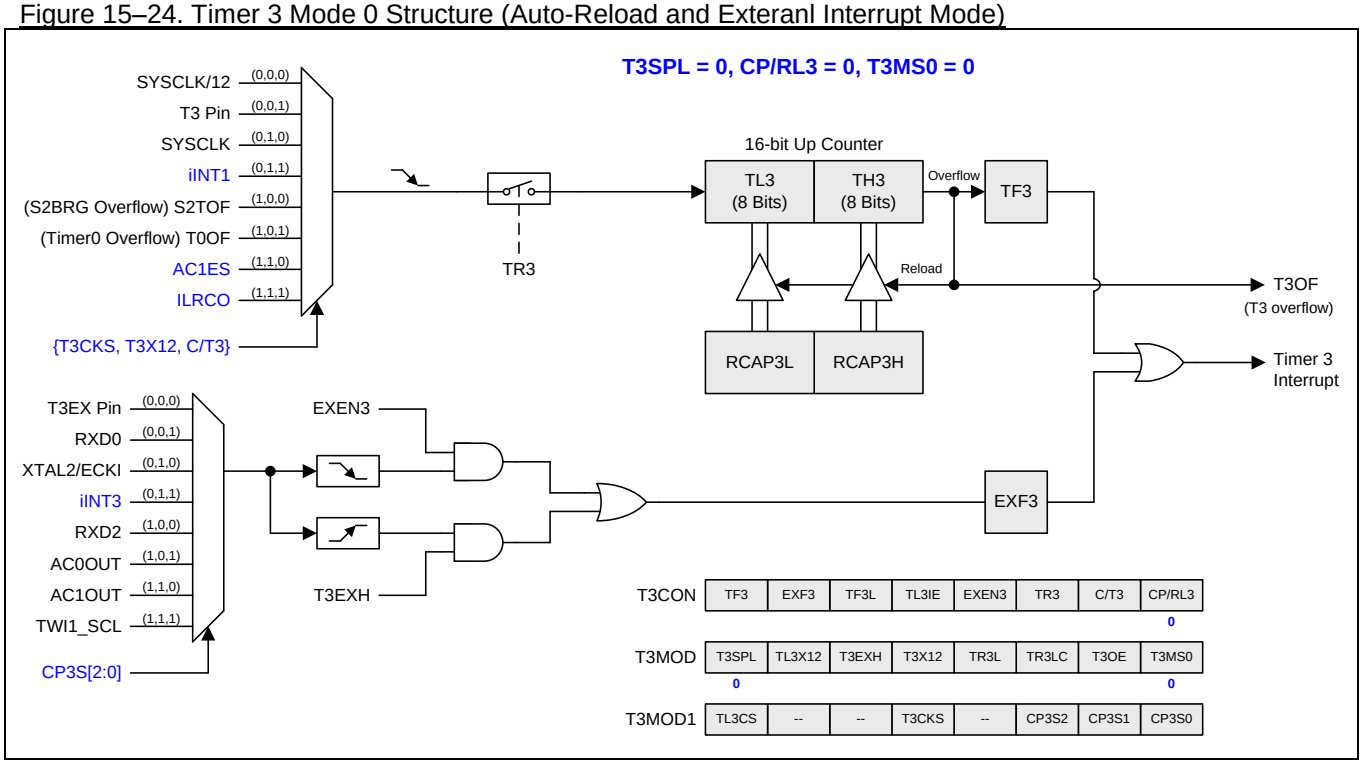

15.3.2. Timer 3 Mode 1 (Auto-Reload with External Interrupt)

Figure 15–25. Timer 3 Mode 1 Structure (Auto-Reload with External Interrupt Mode)

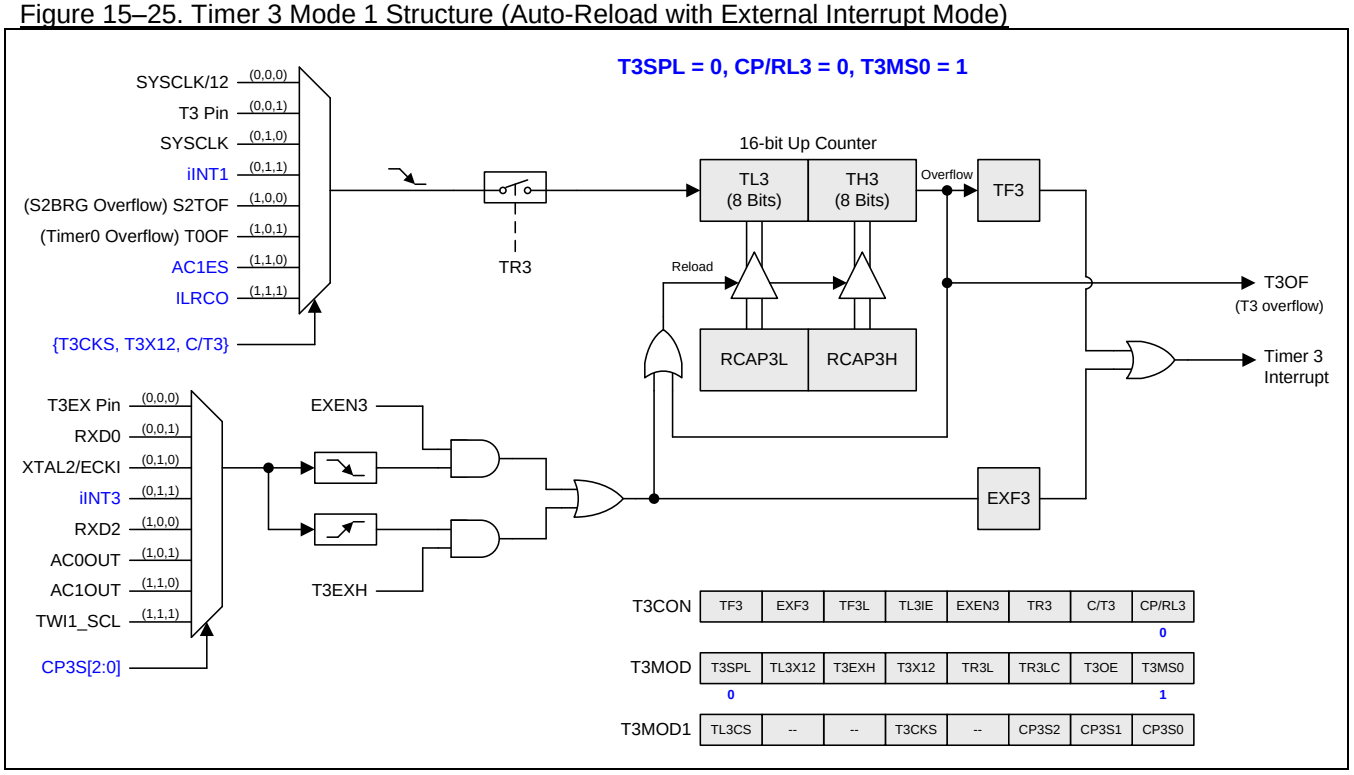

15.3.3. Timer 3 Mode 2 (Capture)

Figure 15–26. Timer 3 Mode 2 Structure (Capture Mode)

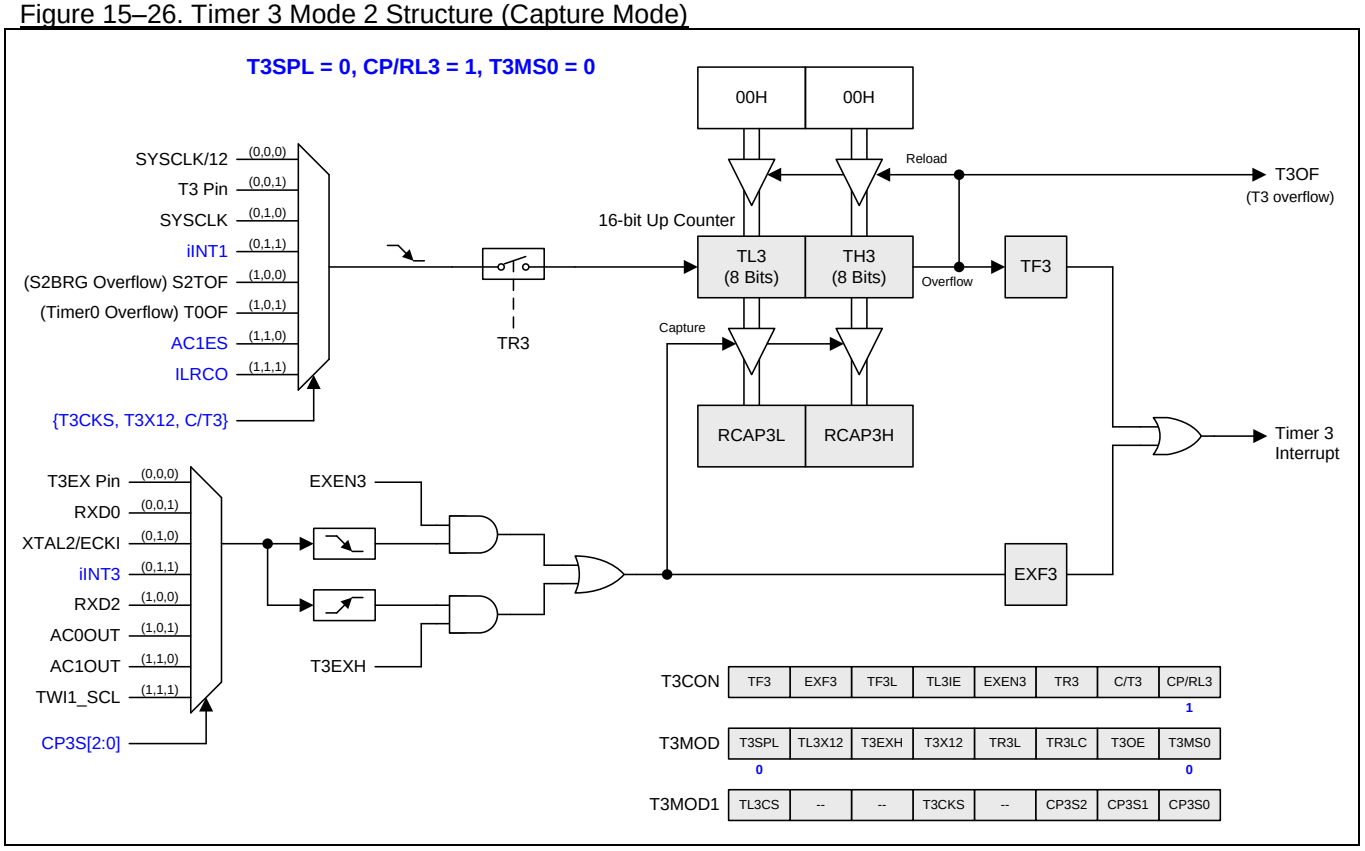

15.3.4. Timer 3 Mode 3 (Capture and Auto-Zero)

Figure 15–27. Timer 3 Mode 3 Structure (Capture with Auto-Zero on TL3 & TH3)

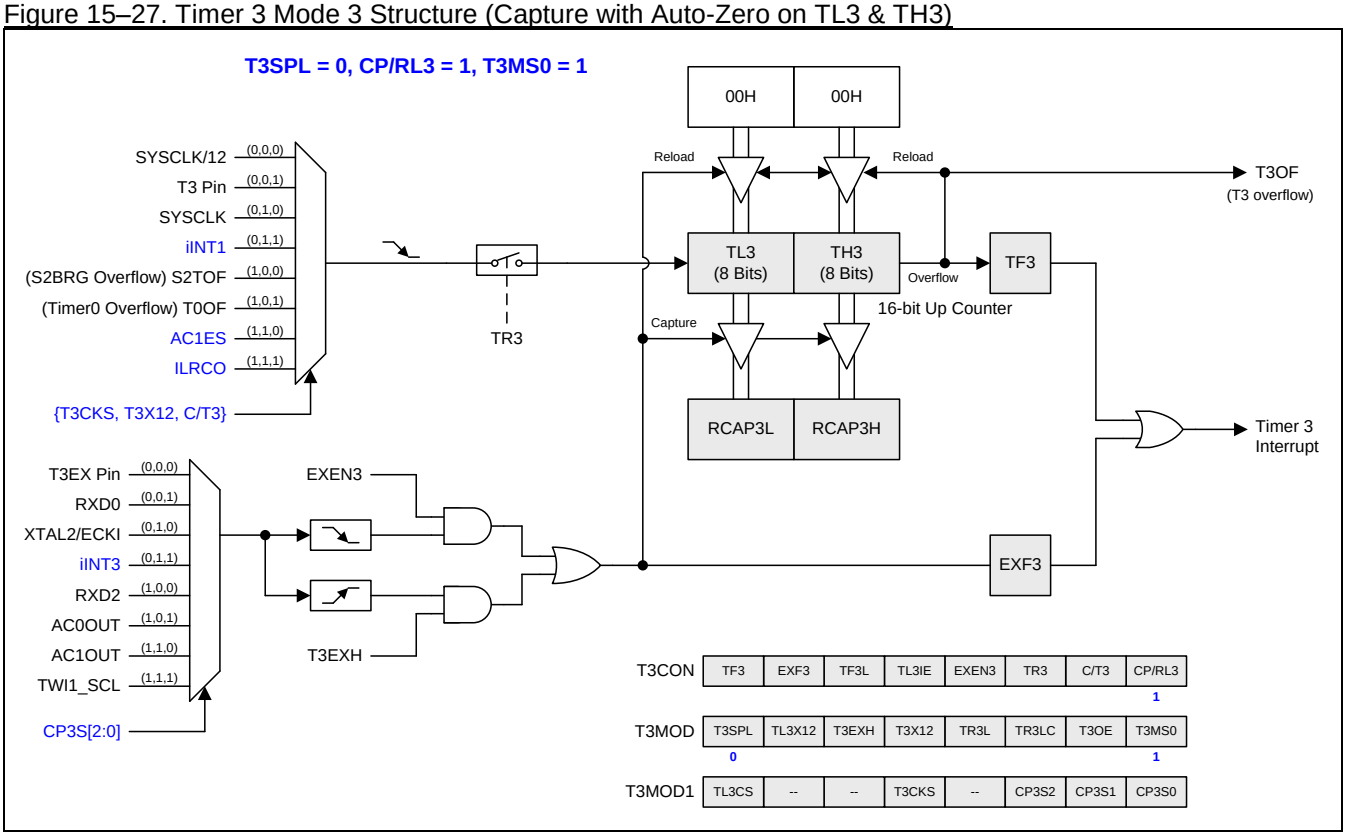

15.3.5. Split Timer 3 Mode 0 (Auto-Reload and External Interrupt)

Figure 15–28. Split Timer 3 Mode 0 Structure (AR and Ex. INT)

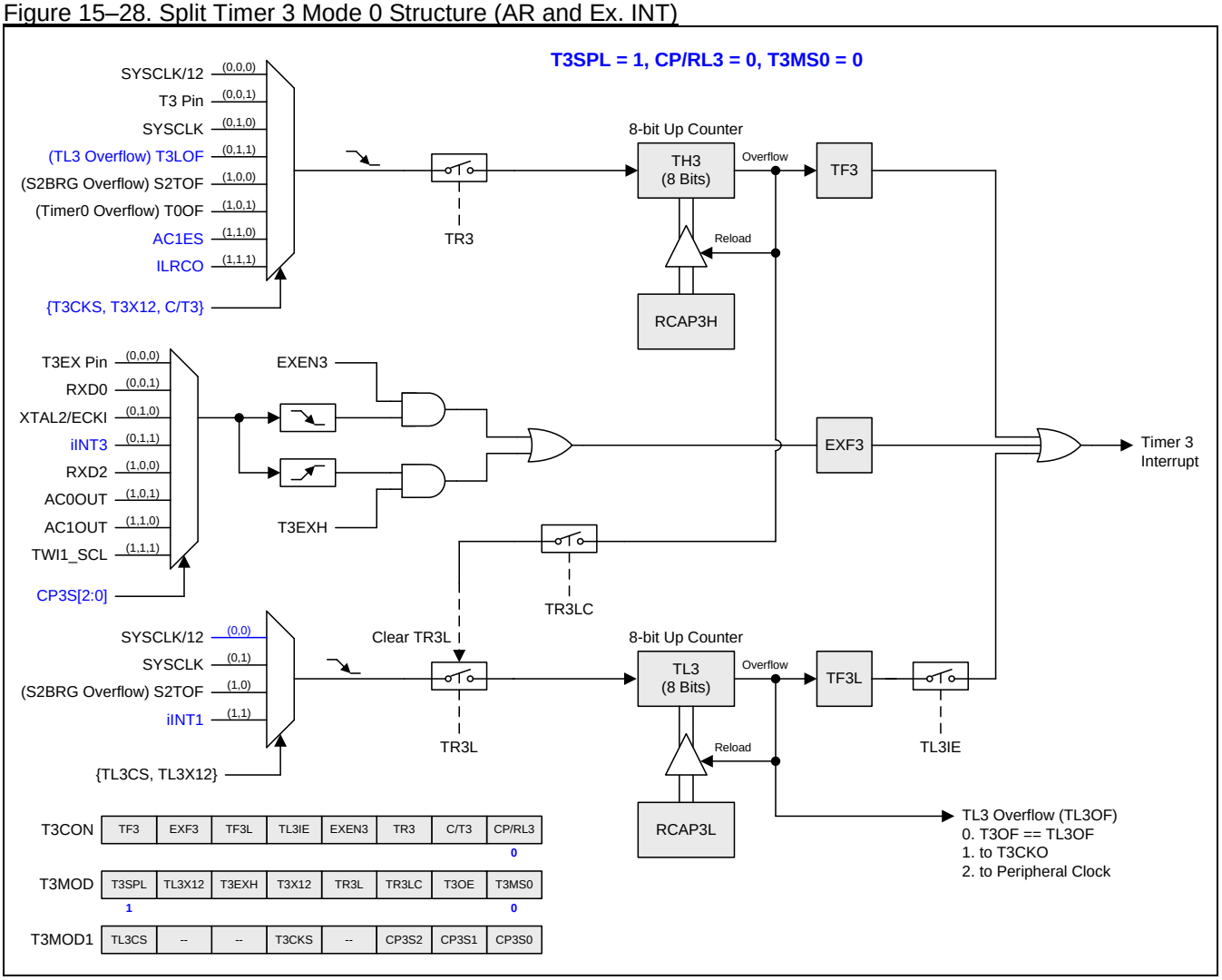

15.3.6. Split Timer 3 Mode 1 (Auto-Reload with External Interrupt)

Figure 15–29. Split Timer 3 Mode 1 Structure (AR with Ex. INT)

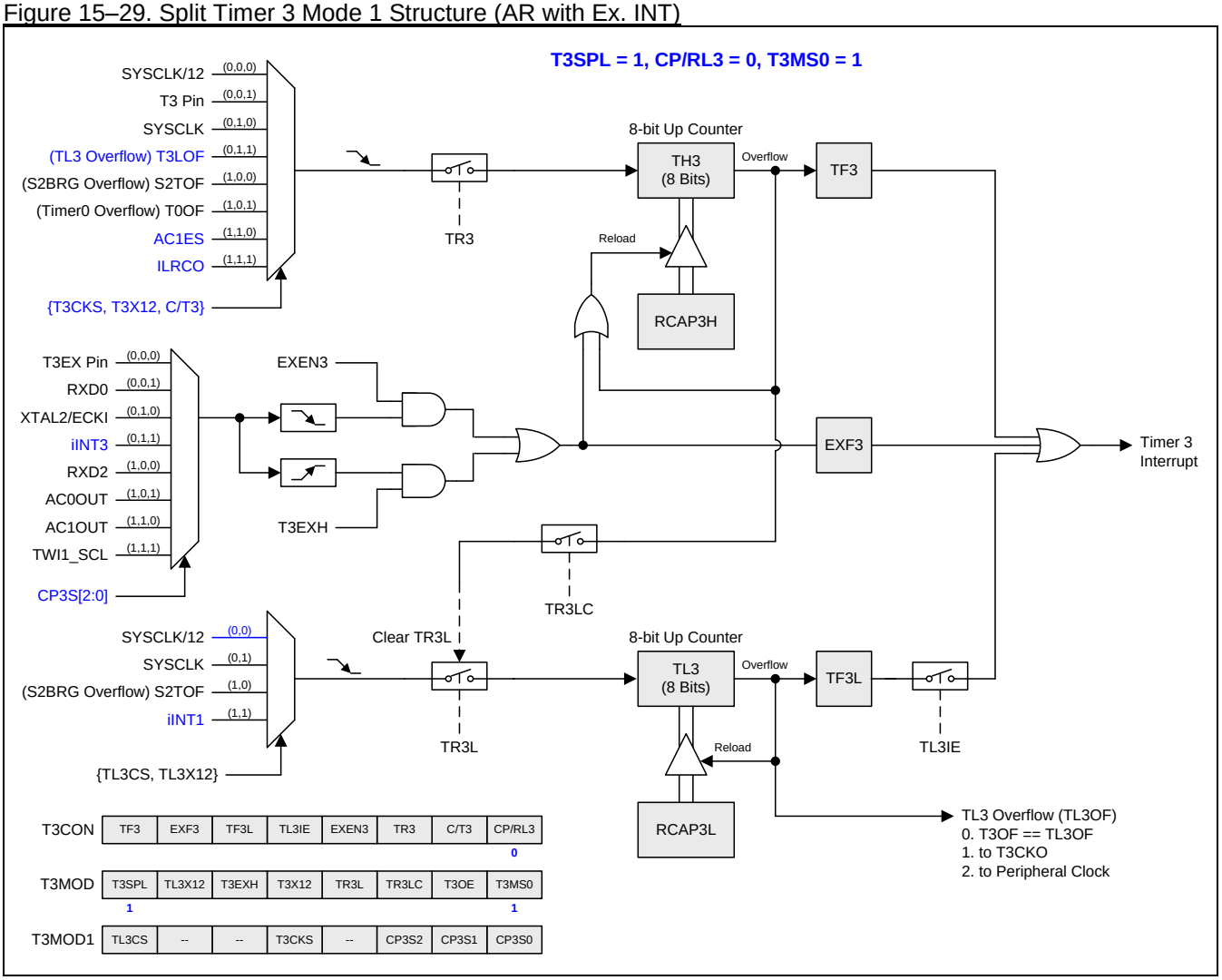

15.3.7. Split Timer 3 Mode 2 (Capture)

Figure 15–30. Split Timer 3 Mode 2 Structure (Capture)

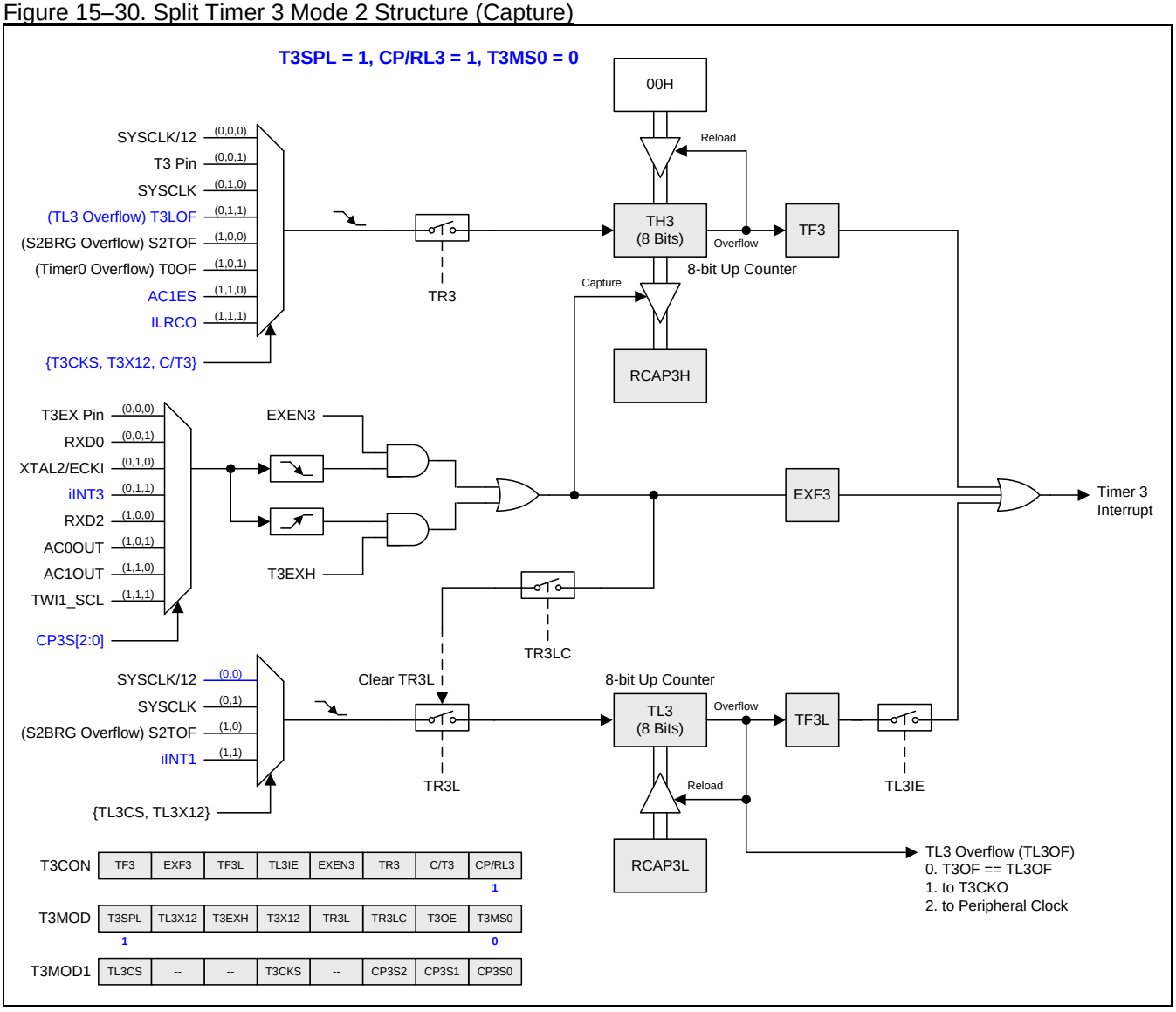

15.3.8. Split Timer 3 Mode 3 (Capture with Auto-Zero)

Figure 15–31. Split Timer 3 Mode 3 Structure (Capture with Auto-Zero on TH3)

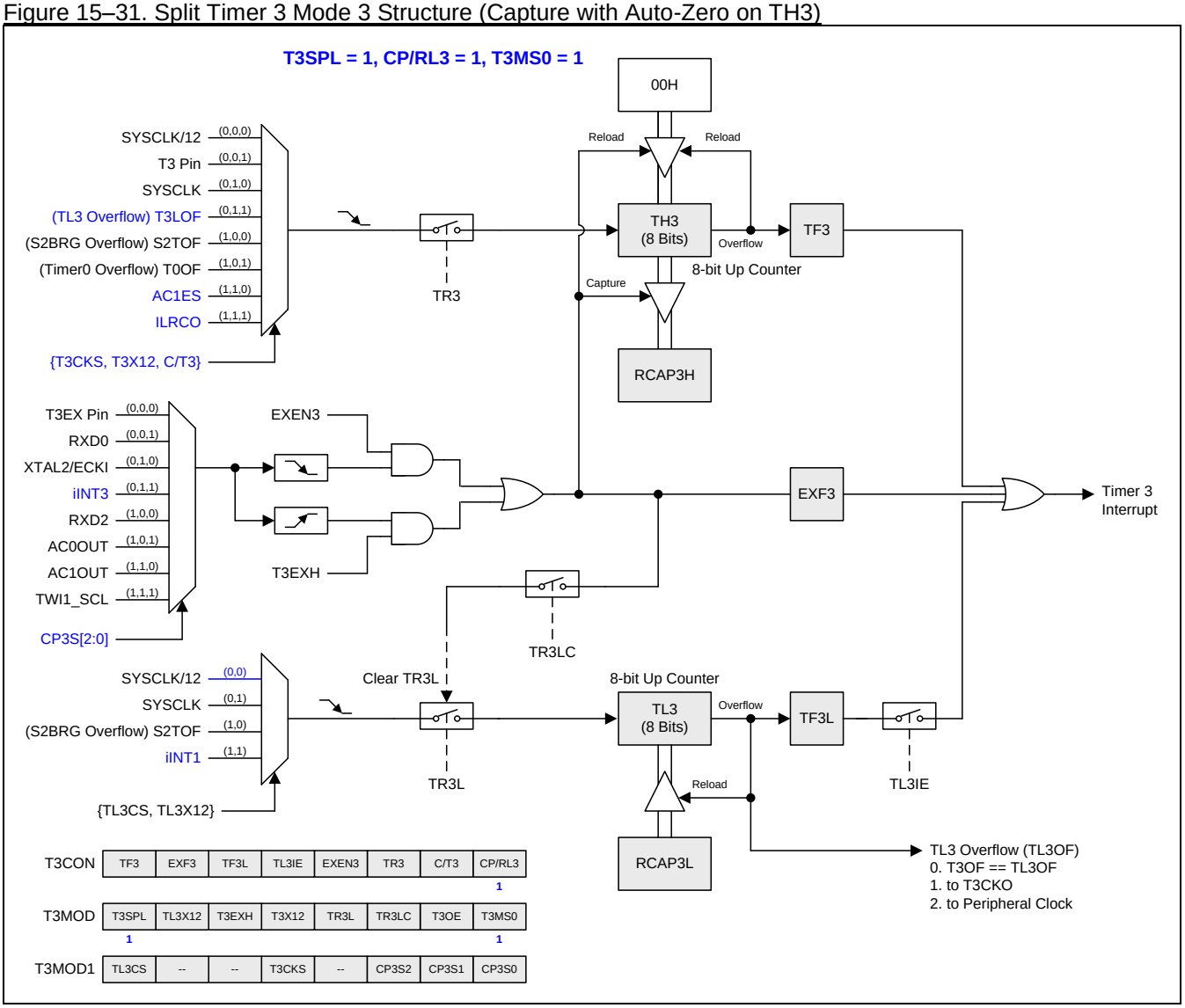

15.3.9. Timer 3 Register

T3CON: Timer 3 Control Register

SFR Page = **1 Only**

SFR Address = 0xC8 RESET = 0000-0000

7	6	5	4	3	2	1	0
TF3	EXF3	TF3L	TL3IE	EXEN3	TR3	C/T3	CP/RL3
R/W	**R/W**	**R/W**	**R/W**	**R/W**	**R/W**	**R/W**	**R/W**

Bit 7: TF3, Timer 3 overflow flag.
0: TF3 must be cleared by software.
1: TF3 is set by a Timer 3 overflow happens.

Bit 6: EXF3, Timer 3 external flag.
0: EXF3 must be cleared by software.
1: Timer 3 external flag set when either a capture or reload is caused by a negative transition on T3EX pin and EXEN3=1 or a positive transition on T3EX and T3EXH=1. When Timer 3 interrupt is enabled, EXF3=1 will cause the CPU to vector to the Timer 3 interrupt routine. When the MCU is in power-down mode and Timer 3 interrupt is enabled, the EXF3 is forced to level-sensitive triggered with wake-up MCU capability.

Bit 5: TF3L, TL3 overflow flag in Timer 3 split mode.
0: TF3L must be cleared by software.
1: TF3L is set by TL3 overflow happened in Timer 3 split mode.

Bit 4: TL3IE, TF3L interrupt enable.
0: Disable TF3L interrupt.
1: Enable TF3L interrupt to share the Timer 3 interrupt vector.

Bit 3: EXEN3, Timer 3 external enable flag on a negative transition of the Timer 3 external input.
0: Cause Timer 3 to ignore negative transition events at Timer 3 external input.
1: Allows a capture or reload to occur as a result of a 1-to-0 transition on Timer 3 external input. If Timer 3 is configured to mode 0 which does no behave capture or reload function, the Timer 3 external input remains the external transition detection and reports on EXF3 flag with Timer 3 interrupt.

Bit 2: TR3, Timer 3 Run control bit. If in Timer 3 split mode, it only controls the TH3.
0: Disabled to stop the Timer/Counter 3.
1: Enabled to start the Timer/Counter 3.

Bit 1: C/T3, Timer 3 clock or counter source selector. The function is active with T3X12 and T3CKS as following definition:

T3CKS, T3X12, C/T3	Timer 3 Clock Selection	TH3 Clock Selection in split mode
0 0 0	SYSCLK/12	SYSCLK/12
0 0 1	T3 Pin	T3 Pin
0 1 0	SYSCLK	SYSCLK
0 1 1	iINT1	TL3OF
1 0 0	S2TOF	S2TOF
1 0 1	T0OF	T0OF
1 1 0	AC1ES	AC1ES
1 1 1	ILRCO	ILRCO

Bit 0: CP/RL3, Timer 3 mode control bit. Refer T3MOD.T3MS0 description for the function definition.

T3MOD: Timer 3 Mode Register

SFR Page = **1 Only**

SFR Address = 0xC9 RESET= 0000-0000

7	6	5	4	3	2	1	0
T3SPL	TL3X12	T3EXH	T3X12	TR3L	TR3LC	T3OE	T3MS0
R/W	**R/W**	**R/W**	**R/W**	**R/W**	**R/W**	**R/W**	**R/W**

Bit 7: T3SPL, Timer 3 split mode control.
0: Disable Timer 3 to split mode.
1: Enable Timer 3 to split mode.

Bit 6: TL3X12, the clock control bit of TL3 in Timer 3 split mode.

TL3CS, TL3X12	TL3 Clock Selection
0 0	SYSCLK/12
0 1	SYSCLK
1 0	S2TOF
1 1	iINT1

Bit 5: T3EXH, Timer 3 external enable flag on a positive transition of T3EX pin.
0: Cause Timer 3 to ignore positive transition events at T3EX pin.
1: Allows a capture or reload to occur as a result of a 0-to1 transition on T3EX pin and set EXF3.

Bit 4: T3X12, Timer 3 clock source selector. Refer to C/T3 description for the function defined.

Bit 3: TR3L, TL3 Run control bit in Timer 3 split mode.
0: Disabled to stop the TL3.
1: Enabled to start the TL3.

Bit 2: TR3LC, TR3L Cleared control.
0: Disabled the TR3L cleared by hardware event.
1: Enabled the TR3L cleared by the TH3 overflow (Timer 3 in mode 0/1) or capture input (Timer 3 in mode 2/3).

Bit 1: T3OE, Timer 3 clock-out enable bit.
0: Disable Timer 3 clock output.
1: Enable Timer 3 clock output.

Bit 0: T3MS0, Timer 3 mode select bit 0.

CP/RL3, T3MS0	Timer 3 Mode Selection
0 0	Mode 0: Auto-Reload and External Interrupt
0 1	Mode 1: Auto-Reload with External Interrupt
1 0	Mode 2: Capture mode
1 1	Mode 3: Capture with Auto-Zero on Timer 3

T3MOD1: Timer 3 Mode Register 1

SFR Page = **2 Only**

SFR Address = 0x93 RESET= 0XX0-X000

7	6	5	4	3	2	1	0
TL3CS	--	--	T3CK2	--	CP3S2	CP3S1	CP3S0
R/W	**W**	**W**	**R/W**	**W**	**R/W**	**R/W**	**R/W**

Bit 7: TL3CS. TL3 clock selection in Timer 3 split mode. Refer to T3MOD.TL3X12 description for the function defined.

Bit 6~5: Reserved. Software must write “0” on these bits when T3MOD1 is written.

Bit 4: T3CKS, Timer 3 clock selection. Refer to C/T3 description for the function defined.

Bit 3: Reserved. Software must write “0” on this bit when T3MOD1 is written.

Bit 2~0: CP3S.2~0. These bits define the capture source selector of Timer 3.

CP3S.2~0	Timer 3 Capture Source Selection
0 0 0	T3EX Pin
0 0 1	RXD0
0 1 0	XTAL2/ECKI
0 1 1	iINT3
1 0 0	RXD2
1 0 1	AC0OUT
1 1 0	AC1OUT
1 1 1	TWI1_SCL

TREN0: Timer Run Enalbe Register 0

SFR Page = **1 Only**

SFR Address = 0x95 RESET= 0000-0000

7	6	5	4	3	2	1	0
TR4LE	TR3LE	TR2LE	TR4E	TR3E	TR2E	TR1E	TR0E
R/W	**R/W**	**R/W**	**R/W**	**R/W**	**R/W**	**R/W**	**R/W**

Bit 6, TR3LE, write “1” on this bit to set TR3L enabled (TR3L=1) when Timer 3 in split mode. This bit is auto-cleared by hardware after writing “1” operation. Write “0” on this bit is no action.

Bit 3, TR3E, write “1” on this bit to set TR3 enabled (TR3=1). This bit is auto-cleared by hardware after writing “1” operation. Write “0” on this bit is no action.

TRLC0: Timer Reload Control Register 0

SFR Page = **2 Only**

SFR Address = 0x95 RESET= 0000-0000

7	6	5	4	3	2	1	0
TL4RLC	TL3RLC	TL2RLC	T4RLC	T3RLC	T2RLC	T1RLC	T0RLC
R/W	**R/W**	**R/W**	**R/W**	**R/W**	**R/W**	**R/W**	**R/W**

Bit 6, TL3RLC, write “1” on this bit to force TL3 reload condition happened when Timer 3 in split mode. This bit is auto-cleared by hardware after writing “1” operation. Write “0” on this bit is no action.

Bit 3, T3RLC, write “1” on this bit to force TH3 and TL3 reload condition happened when Timer 3 not in split mode. Or force TH3 reload condition happened when Timer 3 in split mode. This bit is auto-cleared by hardware after writing “1” operation. Write “0” on this bit is no action.

TSPC0: Timer Stop Control Register 0

SFR Page = **3 Only**

SFR Address = 0x95 RESET= 0000-0000

7	6	5	4	3	2	1	0
TL4SC	TL3SC	TL2SC	T4SC	T3SC	T2SC	T1SC	T0SC
R/W	**R/W**	**R/W**	**R/W**	**R/W**	**R/W**	**R/W**	**R/W**

Bit 6, TL3SC, write “1” on this bit to set TR3L disabled (TR3L=0) when Timer 3 in split mode. This bit is auto-cleared by hardware after writing “1” operation. Write “0” on this bit is no action.

Bit 3, T3SC, write “1” on this bit to set TR3 disabled (TR3=0). This bit is auto-cleared by hardware after writing “1” operation. Write “0” on this bit is no action.

TL3: Timer 3 Low byte Register

SFR Page = **1 Only**

SFR Address = 0xCC RESET = 0000-0000

7	6	5	4	3	2	1	0
TL3.7	TL3.6	TL3.5	TL3.4	TL3.3	TL3.2	TL3.1	TL3.0
R/W	**R/W**	**R/W**	**R/W**	**R/W**	**R/W**	**R/W**	**R/W**

TH3: Timer 3 High byte Register

SFR Page = **1 Only**

SFR Address = 0xCD RESET = 0000-0000

7	6	5	4	3	2	1	0
TH3.7	TH3.6	TH3.5	TH3.4	TH3.3	TH3.2	TH3.1	TH3.0
R/W	**R/W**	**R/W**	**R/W**	**R/W**	**R/W**	**R/W**	**R/W**

RCAP3L: Timer 3 Capture Low byte Register

SFR Page = **1 Only**

SFR Address = 0xCA RESET = 0000-0000

7	6	5	4	3	2	1	0
RCAP3L.7	RCAP3L.6	RCAP3L.5	RCAP3L.4	RCAP3L.3	RCAP3L.2	RCAP3L.1	RCAP3L.1
R/W	**R/W**	**R/W**	**R/W**	**R/W**	**R/W**	**R/W**	**R/W**

RCAP3H: Timer 3 Capture High byte Register

SFR Page = **1 Only**

SFR Address = 0xCB RESET = 0000-0000

7	6	5	4	3	2	1	0
RCAP3H.7	RCAP3H.6	RCAP3H.5	RCAP3H.4	RCAP3H.3	RCAP3H.2	RCAP3H.1	RCAP3H.0
R/W	**R/W**	**R/W**	**R/W**	**R/W**	**R/W**	**R/W**	**R/W**

AUXR5: Auxiliary Control Register 5

SFR Page = 2 Only

SFR Address = 0xA4 RESET = 0000-0000

7	6	5	4	3	2	1	0
SnMIPS	S3PS0	S2PS0	C1PPS0	T0OPS0	T4PS0	T3PS1	T3PS0
R/W	**R/W**	**R/W**	**R/W**	**R/W**	**R/W**	**R/W**	**R/W**

Bit 1~0: T3PS1~0, Timer 3 Port Selection [1:0].

T3PS1~0	T3/T3CKO	T3EX
00	P4.6	P7.2
01	P4.0	P4.1
10	P2.1	P2.0
11	P6.7	P5.7

15.4. Timer 4

15.4.1. Timer 4 Mode 0 (Auto-Reload and External Interrupt)

Figure 15–32. Timer 4 Mode 0 Structure (Auto-Reload and Exteranl Interrupt Mode)

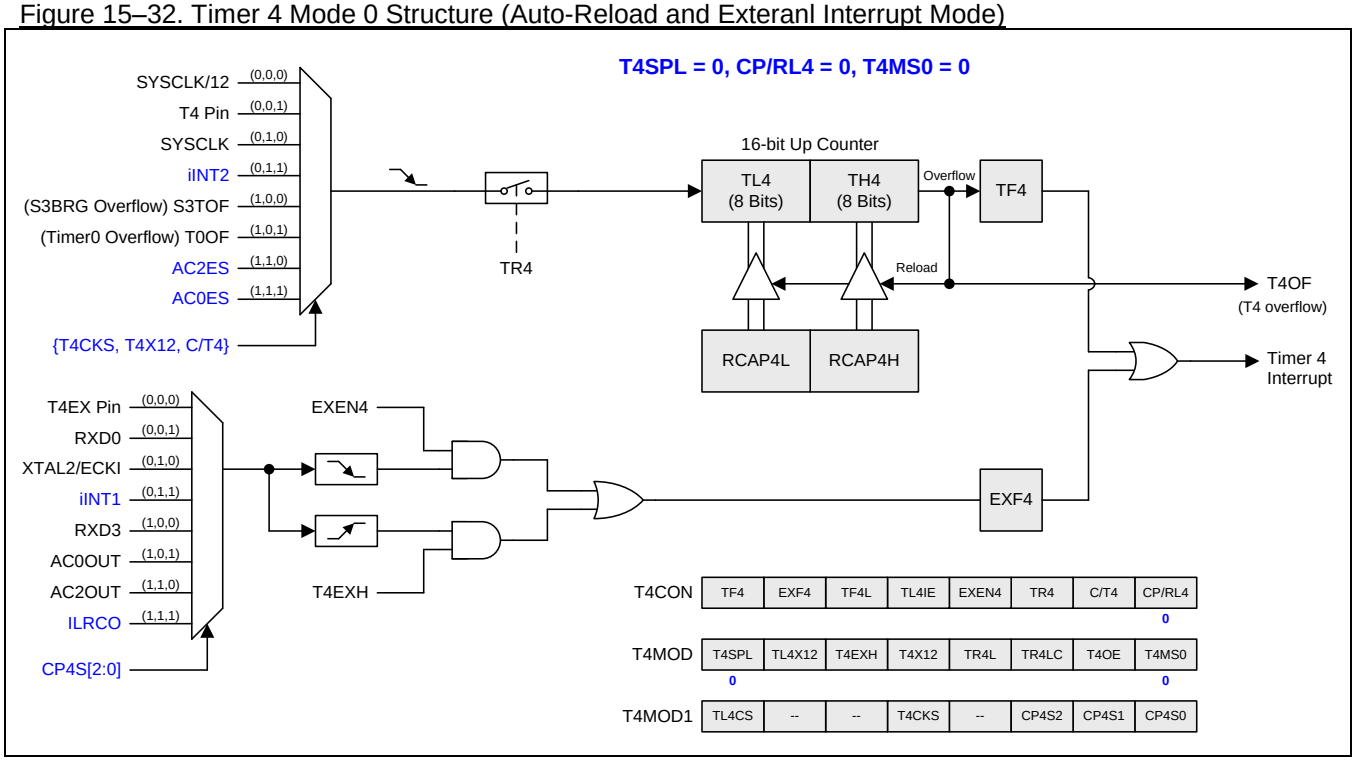

15.4.2. Timer 4 Mode 1 (Auto-Reload with External Interrupt)

Figure 15–33. Timer 4 Mode 1 Structure (Auto-Reload with External Interrupt Mode)

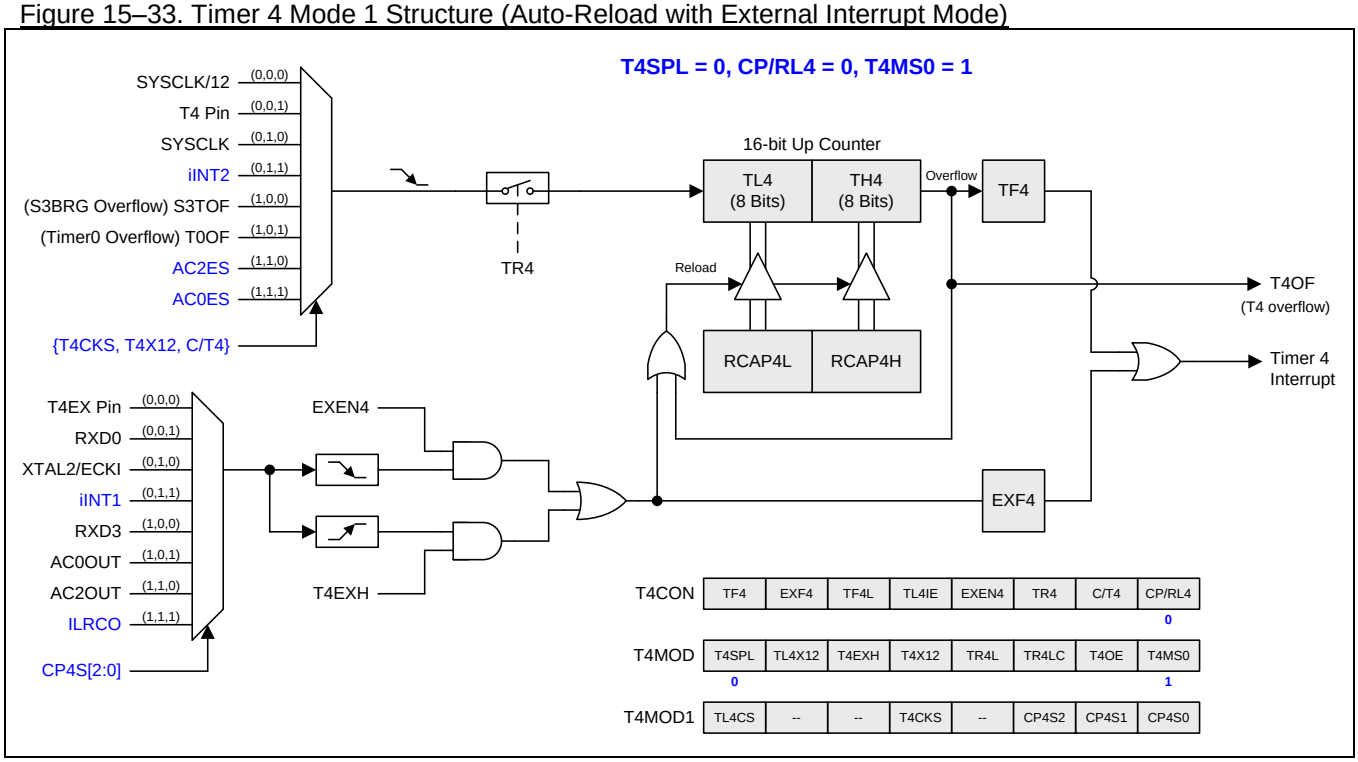

15.4.3. Timer 4 Mode 2 (Capture)

Figure 15–34. Timer 4 Mode 2 Structure (Capture Mode)

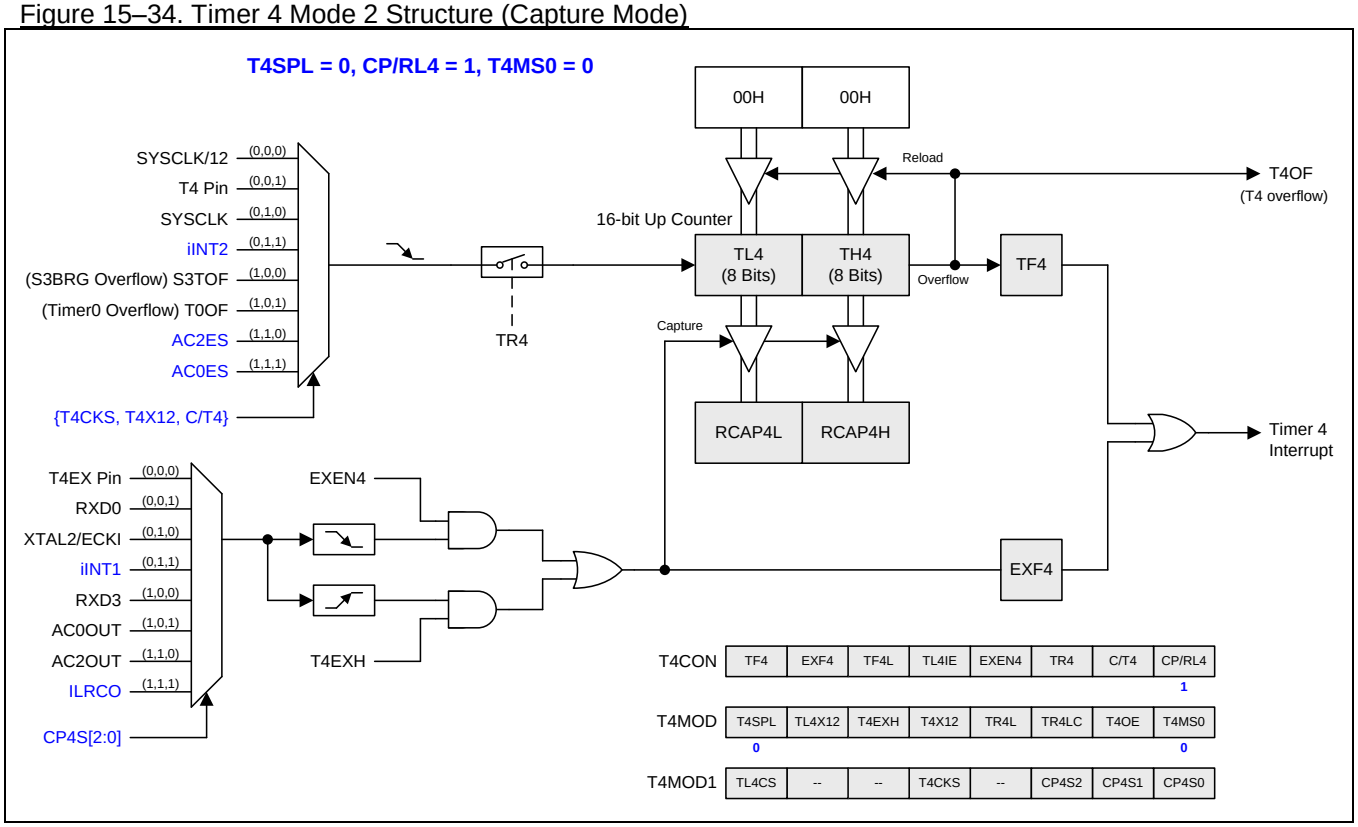

15.4.4. Timer 4 Mode 3 (Capture and Auto-Zero)

Figure 15–35. Timer 4 Mode 3 Structure (Capture with Auto-Zero on TL4 & TH4)

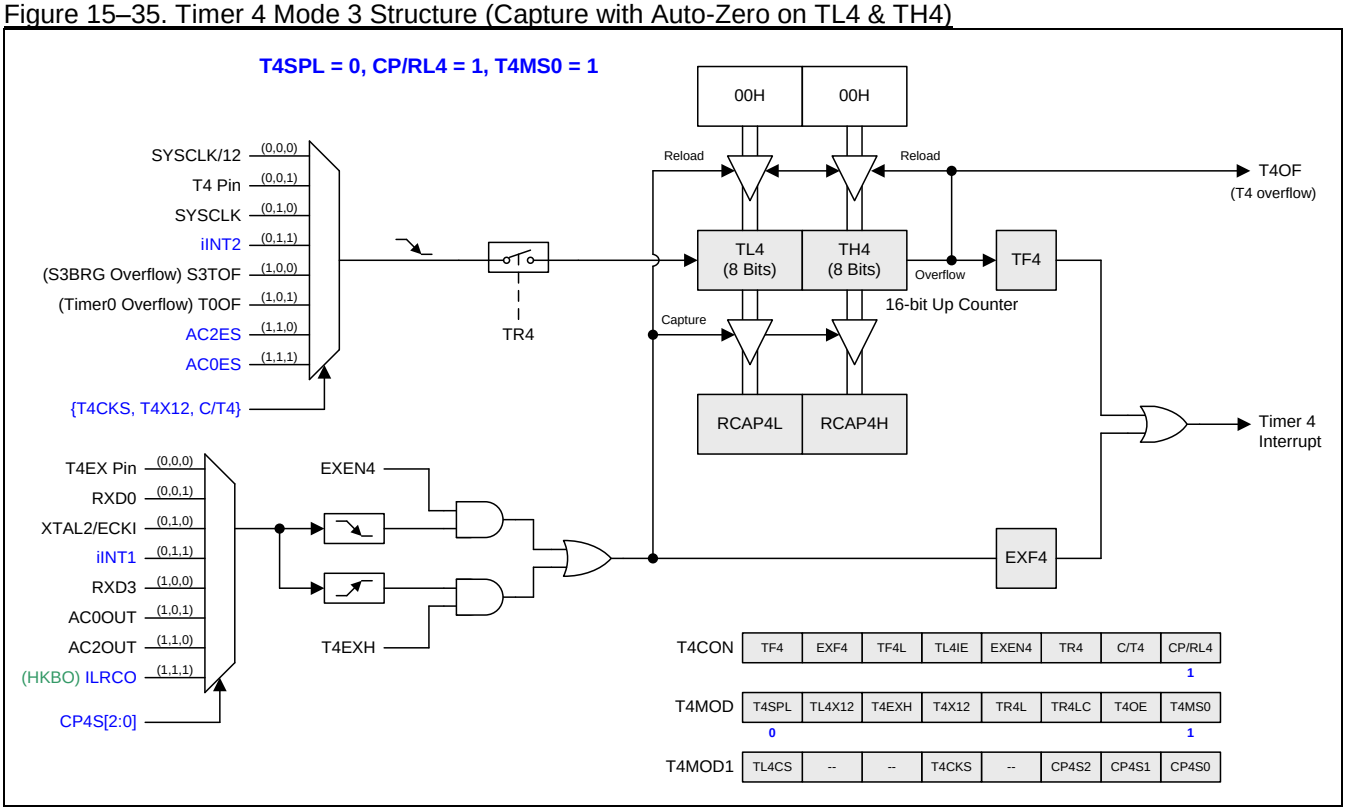

15.4.5. Split Timer 4 Mode 0 (Auto-Reload and External Interrupt)

Figure 15–36. Split Timer 3 Mode 0 Structure (AR and Ex. INT)

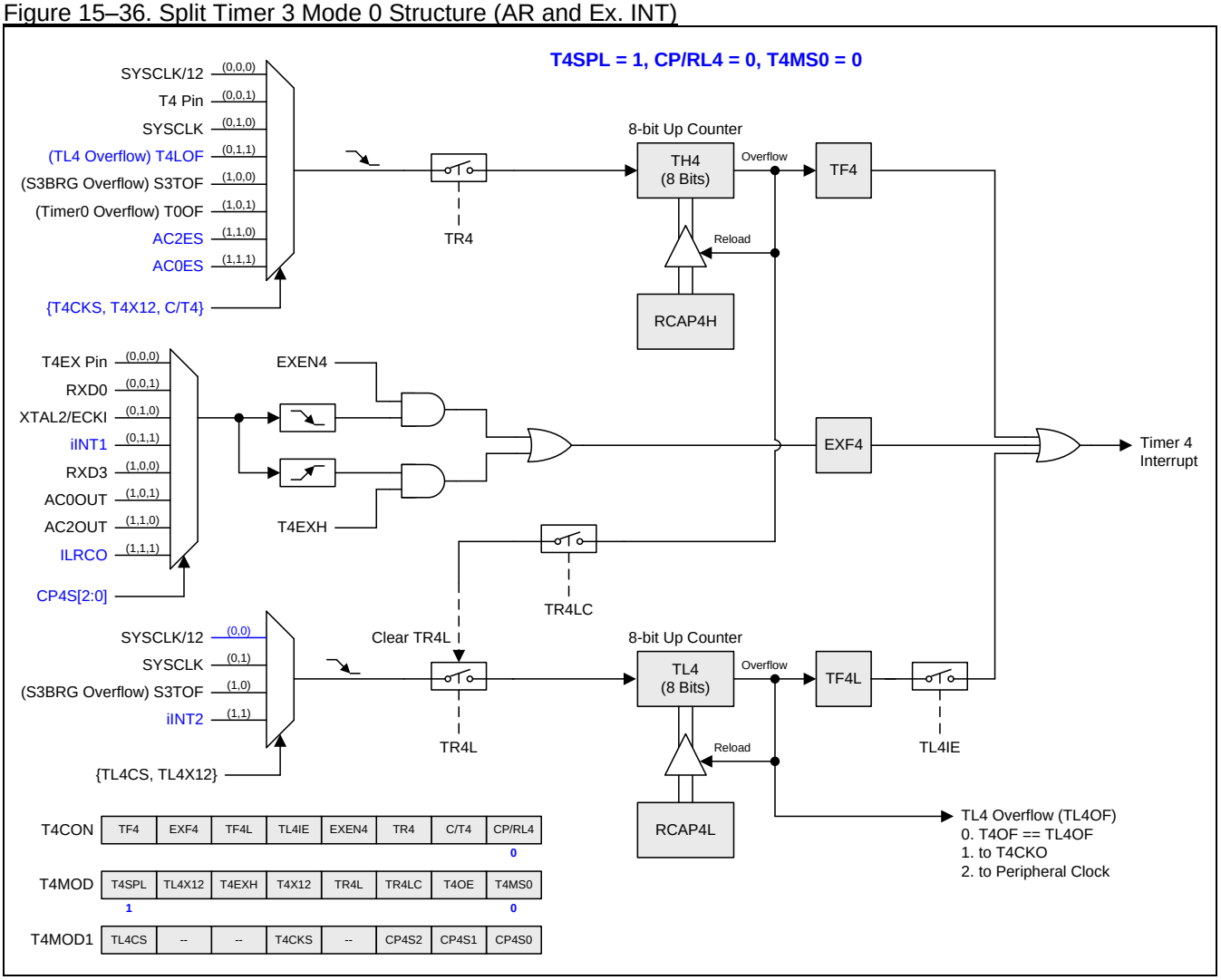

15.4.6. Split Timer 4 Mode 1 (Auto-Reload with External Interrupt)

Figure 15–37. Split Timer 4 Mode 1 Structure (AR with Ex. INT)

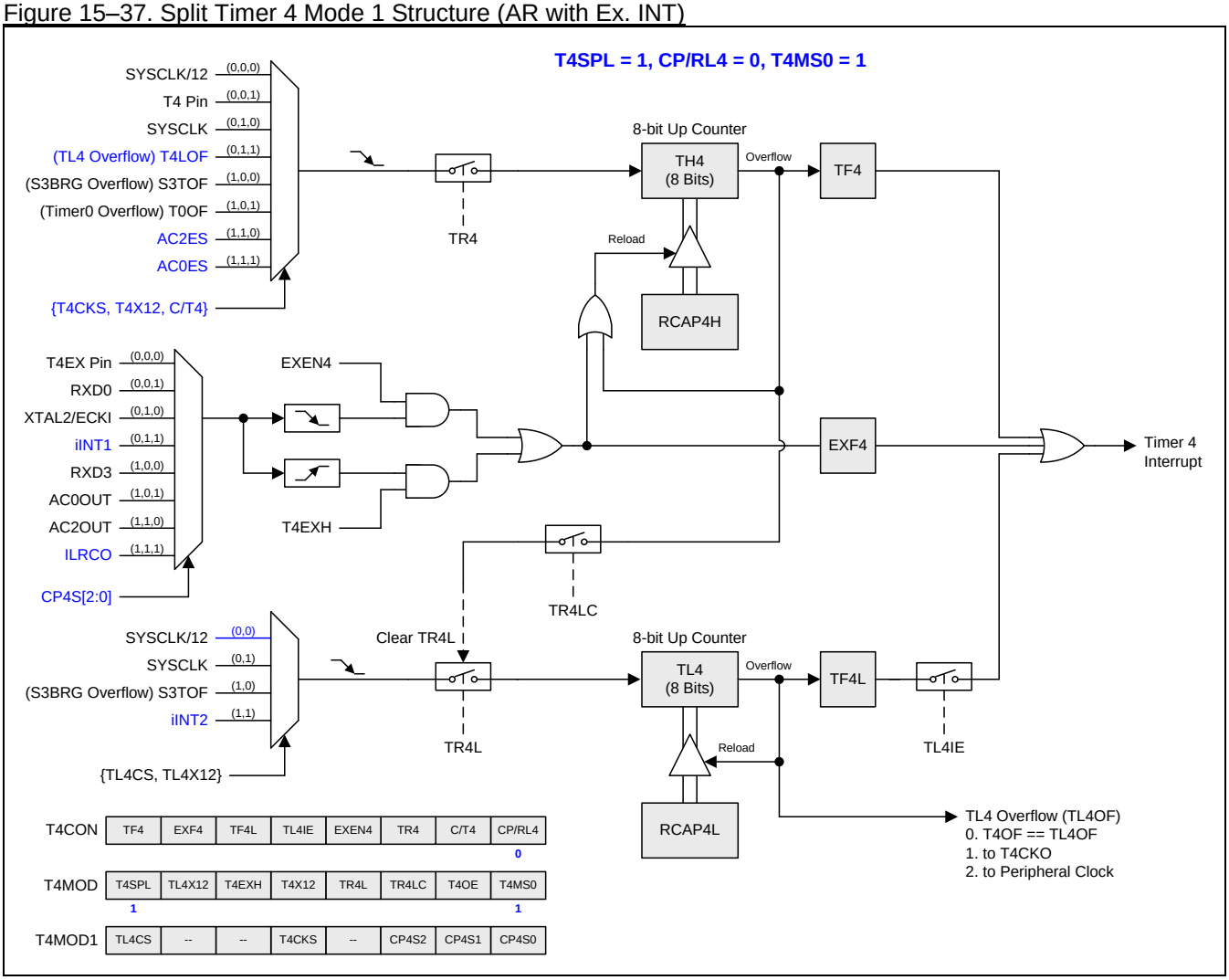

15.4.7. Split Timer 4 Mode 2 (Capture)

Figure 15–38. Split Timer 4Mode 2 Structure (Capture)

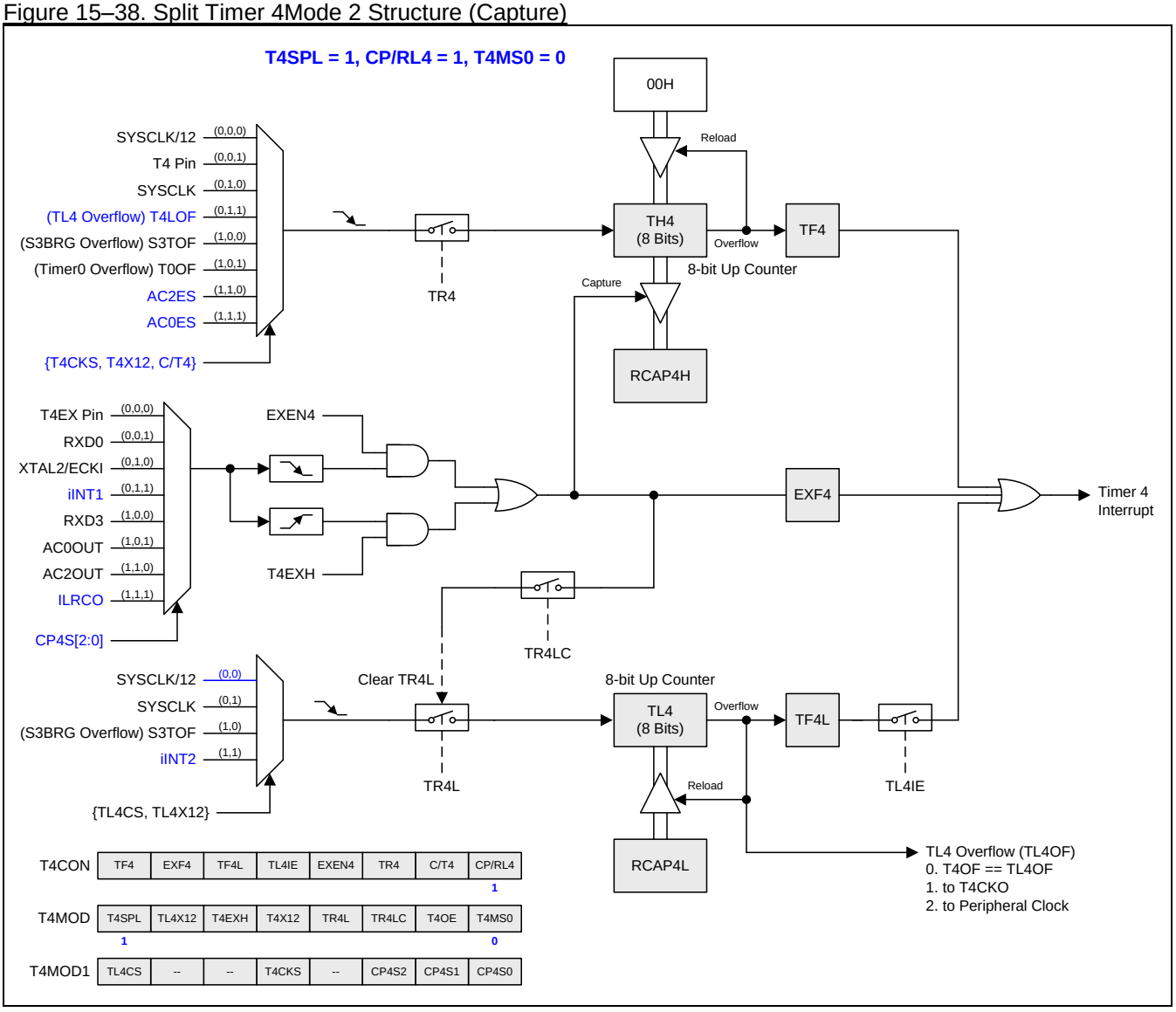

15.4.8. Split Timer 4 Mode 3 (Capture with Auto-Zero)

Figure 15–39. Split Timer 4 Mode 3 Structure (Capture with Auto-Zero on TH4)

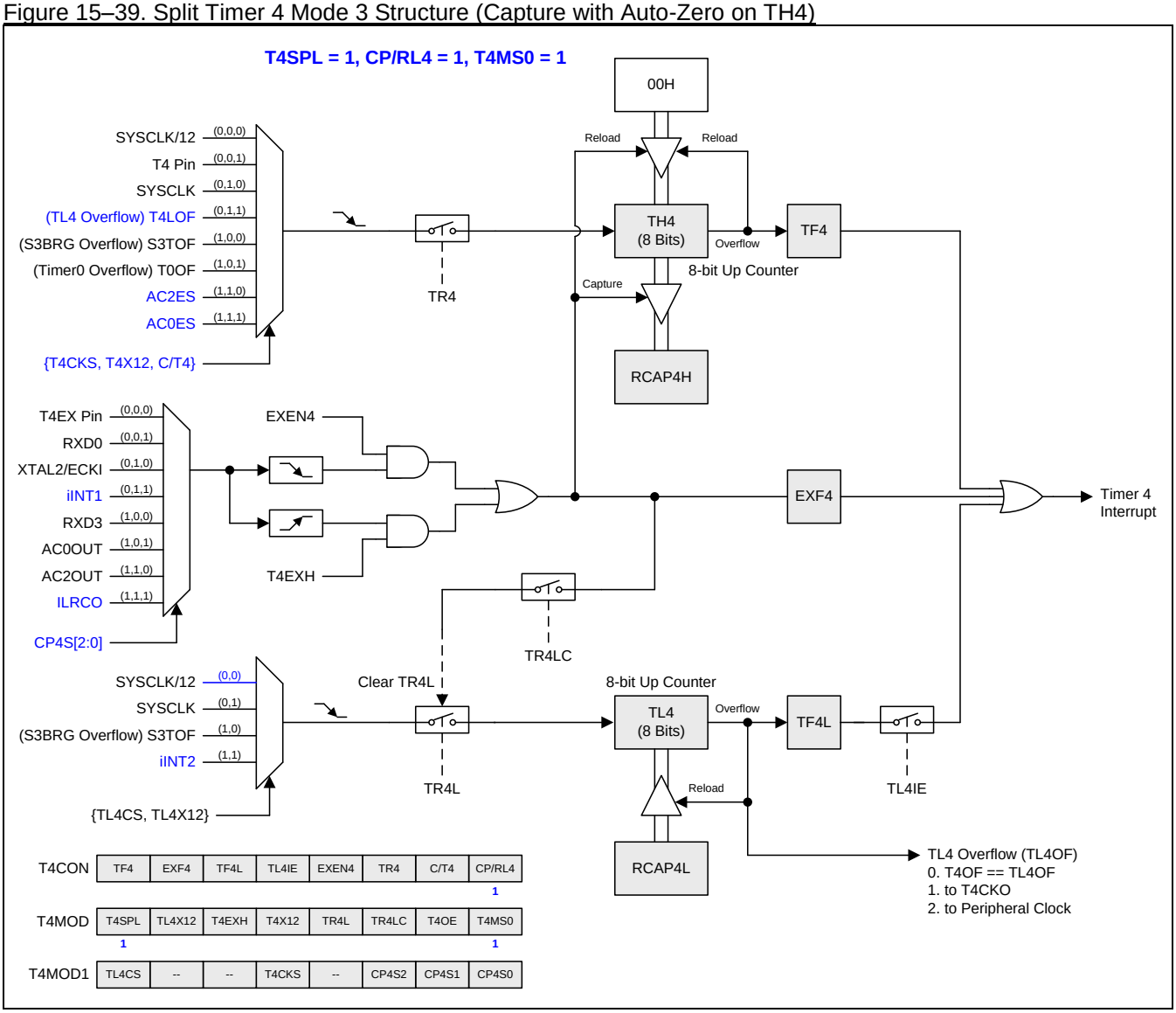

15.4.9. Timer 4 Register

T4CON: Timer 4 Control Register

SFR Page = **2 Only**

SFR Address = 0xC8 RESET = 0000-0000

7	6	5	4	3	2	1	0
TF4	EXF4	TF4L	TL4IE	EXEN4	TR4	C/T4	CP/RL4
R/W	**R/W**	**R/W**	**R/W**	**R/W**	**R/W**	**R/W**	**R/W**

Bit 7: TF4 Timer 4overflow flag.
0: TF4 must be cleared by software.
1: TF4 is set by a Timer 4 overflow happens.

Bit 6: EXF4, Timer 4 external flag.
0: EXF4 must be cleared by software.
1: Timer 4 external flag set when either a capture or reload is caused by a negative transition on T4EX pin and EXEN4=1 or a positive transition on T4EX and T4EXH=1. When Timer 4 interrupt is enabled, EXF4=1 will cause the CPU to vector to the Timer 4 interrupt routine. When the MCU is in power-down mode and Timer 4 interrupt is enabled, the EXF4 is forced to level-sensitive triggered with wake-up MCU capability.

Bit 5: TF4L, TL4 overflow flag in Timer 4 split mode.
0: TF4L must be cleared by software.
1: TF4L is set by TL4 overflow happened in Timer 4 split mode.

Bit 4: TL4IE, TF4L interrupt enable.
0: Disable TF4L interrupt.
1: Enable TF4L interrupt to share the Timer 4 interrupt vector.

Bit 3: EXEN4, Timer 4 external enable flag on a negative transition of the Timer 4 external input.
0: Cause Timer 4 to ignore negative transition events at Timer 4 external input.
1: Allows a capture or reload to occur as a result of a 1-to-0 transition on Timer 4 external input. If Timer 4 is configured to mode 0 which does no behave capture or reload function, the Timer 4 external input remains the external transition detection and reports on EXF4 flag with Timer 4 interrupt.

Bit 2: TR4, Timer 4 Run control bit. If in Timer 4 split mode, it only controls the TH4.
0: Disabled to stop the Timer/Counter 4.
1: Enabled to start the Timer/Counter 4.

Bit 1: C/T4, Timer 4 clock or counter source selector. The function is active with T4X12 and T4CKS as following definition:

T4CKS, T4X12, C/T4	Timer 4 Clock Selection	TH4 Clock Selection in split mode
0 0 0	SYSCLK/12	SYSCLK/12
0 0 1	T4 Pin	T4 Pin
0 1 0	SYSCLK	SYSCLK
0 1 1	iINT2	TL4OF
1 0 0	S3TOF	S3TOF
1 0 1	T0OF	T0OF
1 1 0	AC2ES	AC2ES
1 1 1	AC0ES	AC0ES

Bit 0: CP/RL4, Timer 4 mode control bit. Refer T4MOD.T4MS0 description for the function definition.

T4MOD: Timer 4 Mode Register

SFR Page = **2 Only**

SFR Address = 0xC9 RESET= 0000-0000

7	6	5	4	3	2	1	0

T4SPL	TL4X12	T4EXH	T4X12	TR4L	TR4LC	T4OE	T4MS0
R/W	**R/W**	**R/W**	**R/W**	**R/W**	**R/W**	**R/W**	**R/W**

Bit 7: T4SPL, Timer 4 split mode control.
0: Disable Timer 4 to split mode.
1: Enable Timer 4 to split mode.

Bit 6: TL4X12, the clock control bit of TL4 in Timer 4 split mode.

TL4CS, TL4X12	TL4 Clock Selection
0 0	SYSCLK/12
0 1	SYSCLK
1 0	S3TOF
1 1	iINT2

Bit 5: T4EXH, Timer 4 external enable flag on a positive transition of T4EX pin.
0: Cause Timer 4 to ignore positive transition events at T4EX pin.
1: Allows a capture or reload to occur as a result of a 0-to1 transition on T4EX pin and set EXF4.

Bit 4: T4X12, Timer 4 clock source selector. Refer to C/T4 description for the function defined.

Bit 3: TR4L, TL4 Run control bit in Timer 4 split mode.
0: Disabled to stop the TL4.
1: Enabled to start the TL4.

Bit 2: TR4LC, TR4L Cleared control.
0: Disabled the TR4L cleared by hardware event.
1: Enabled the TR4L cleared by the TH4 overflow (Timer 4 in mode 0/1) or capture input (Timer 4 in mode 2/3).

Bit 1: T4OE, Timer 4 clock-out enable bit.
0: Disable Timer 4 clock output.
1: Enable Timer 4 clock output.

Bit 0: T4MS0, Timer 4 mode select bit 0.

CP/RL4, T4MS0	Timer 4 Mode Selection
0 0	Mode 0: Auto-Reload and External Interrupt
0 1	Mode 1: Auto-Reload with External Interrupt
1 0	Mode 2: Capture mode
1 1	Mode 3: Capture with Auto-Zero on Timer 4

T4MOD1: Timer 4 Mode Register 1

SFR Page = **3 Only**
SFR Address = 0x93 RESET= 0XX0-X000

7	6	5	4	3	2	1	0
TL4CS	--	--	T4CK2	--	CP4S2	CP4S1	CP4S0
R/W	**W**	**W**	**R/W**	**W**	**R/W**	**R/W**	**R/W**

Bit 7: TL4CS. TL4 clock selection in Timer 4 split mode. Refer to T4MOD.TL4X12 description for the function defined.

Bit 6~5: Reserved. Software must write “0” on these bits when T4MOD1 is written.

Bit 4: T4CKS, Timer 4 clock selection. Refer to C/T4 description for the function defined.

Bit 3: Reserved. Software must write “0” on this bit when T4MOD1 is written.

Bit 2~0: CP4S.2~0. These bits define the capture source selector of Timer 4.

CP4S.2~0	Timer 4 Capture Source Selection
0 0 0	T4EX Pin
0 0 1	RXD0
0 1 0	XTAL2/ECKI

0 1 1	iINT1
1 0 0	RXD3
1 0 1	AC0OUT
1 1 0	AC2OUT
1 1 1	ILRCO

TREN0: Timer Run Enalbe Register 0

SFR Page = **1 Only**

SFR Address = 0x95 RESET= 0000-0000

7	6	5	4	3	2	1	0
TR4LE	TR3LE	TR2LE	TR4E	TR3E	TR2E	TR1E	TR0E
R/W	**R/W**	**R/W**	**R/W**	**R/W**	**R/W**	**R/W**	**R/W**

Bit 7, TR4LE, write “1” on this bit to set TR4L enabled (TR4L=1) when Timer 3 in split mode. This bit is auto-cleared by hardware after writing “1” operation. Write “0” on this bit is no action.

Bit 4, TR4E, write “1” on this bit to set TR4 enabled (TR4=1). This bit is auto-cleared by hardware after writing “1” operation. Write “0” on this bit is no action.

TRLC0: Timer Reload Control Register 0

SFR Page = **2 Only**

SFR Address = 0x95 RESET= 0000-0000

7	6	5	4	3	2	1	0
TL4RLC	TL3RLC	TL2RLC	T4RLC	T3RLC	T2RLC	T1RLC	T0RLC
R/W	**R/W**	**R/W**	**R/W**	**R/W**	**R/W**	**R/W**	**R/W**

Bit 7, TL4RLC, write “1” on this bit to force TL4 reload condition happened when Timer 4 in split mode. This bit is auto-cleared by hardware after writing “1” operation. Write “0” on this bit is no action.

Bit 4, T4RLC, write “1” on this bit to force TH4 and TL4 reload condition happened when Timer 4 not in split mode. Or force TH4 reload condition happened when Timer 4 in split mode. This bit is auto-cleared by hardware after writing “1” operation. Write “0” on this bit is no action.

TSPC0: Timer Stop Control Register 0

SFR Page = **3 Only**

SFR Address = 0x95 RESET= 0000-0000

7	6	5	4	3	2	1	0
TL4SC	TL3SC	TL2SC	T4SC	T3SC	T2SC	T1SC	T0SC
R/W	**R/W**	**R/W**	**R/W**	**R/W**	**R/W**	**R/W**	**R/W**

Bit 7, TL4SC, write “1” on this bit to set TR4L disabled (TR4L=0) when Timer 4 in split mode. This bit is auto-cleared by hardware after writing “1” operation. Write “0” on this bit is no action.

Bit 4, T4SC, write “1” on this bit to set TR4 disabled (TR4=0). This bit is auto-cleared by hardware after writing “1” operation. Write “0” on this bit is no action.

TL4: Timer 4 Low byte Register

SFR Page = **2 Only**

SFR Address = 0xCC RESET = 0000-0000

7	6	5	4	3	2	1	0
TL4.7	TL4.6	TL4.5	TL4.4	TL4.3	TL4.2	TL4.1	TL4.0
R/W	**R/W**	**R/W**	**R/W**	**R/W**	**R/W**	**R/W**	**R/W**

TH4: Timer 4 High byte Register

SFR Page = **2 Only**

SFR Address = 0xCD RESET = 0000-0000

7	6	5	4	3	2	1	0
TH4.7	TH4.6	TH4.5	TH4.4	TH4.3	TH4.2	TH4.1	TH4.0
R/W	**R/W**	**R/W**	**R/W**	**R/W**	**R/W**	**R/W**	**R/W**

RCAP4L: Timer 4 Capture Low byte Register

SFR Page = **2 Only**

SFR Address = 0xCA RESET = 0000-0000

7	6	5	4	3	2	1	0
RCAP4L.7	RCAP4L.6	RCAP4L.5	RCAP4L.4	RCAP4L.3	RCAP4L.2	RCAP4L.1	RCAP4L.1
R/W	**R/W**	**R/W**	**R/W**	**R/W**	**R/W**	**R/W**	**R/W**

RCAP4H: Timer 4 Capture High byte Register

SFR Page = **2 Only**

SFR Address = 0xCB RESET = 0000-0000

7	6	5	4	3	2	1	0
RCAP4H.7	RCAP4H.6	RCAP4H.5	RCAP4H.4	RCAP4H.3	RCAP4H.2	RCAP4H.1	RCAP4H.0
R/W	**R/W**	**R/W**	**R/W**	**R/W**	**R/W**	**R/W**	**R/W**

AUXR5: Auxiliary Control Register 5

SFR Page = 2 Only

SFR Address = 0xA4 RESET = 0000-0000

7	6	5	4	3	2	1	0
SnMIPS	S3PS0	S2PS0	C1PPS0	T0OPS0	T4PS0	T3PS1	T3PS0
R/W	**R/W**	**R/W**	**R/W**	**R/W**	**R/W**	**R/W**	**R/W**

Bit 2: T4PS0, Timer 4 port selection0.

T4PS0	T4/T4CKO	T4EX
0	P7.0	P7.1
1	P4.2	P4.3

16. Programmable Counter Array (PCA0)

The **MG82FG5C64** is equipped with a Programmable Counter Array (PCA0), which provides more timing capabilities with less CPU intervention than the standard timer/counters. Its advantages include reduced software overhead and improved accuracy.

16.1. PCA Overview

The PCA consists of a dedicated timer/counter which serves as the time base for an array of **Six** compare/capture modules. Figure 16–1 shows a block diagram of the PCA. Notice that the PCA timer and modules are all 16-bits. If an external event is associated with a module, that function is shared with the corresponding Port 2 pin. If the module is not using the port pin, the pin can still be used for standard I/O.

Module 0~5 can be programmed in any one of the following modes:

- Rising and/or Falling Edge Capture
- Software Timer
- High Speed Output
- Pulse Width Modulator (PWM) Output

All of these modes will be discussed later in detail. However, let's first look at how to set up the PCA timer and modules.

Figure 16–1. PCA Block Diagram

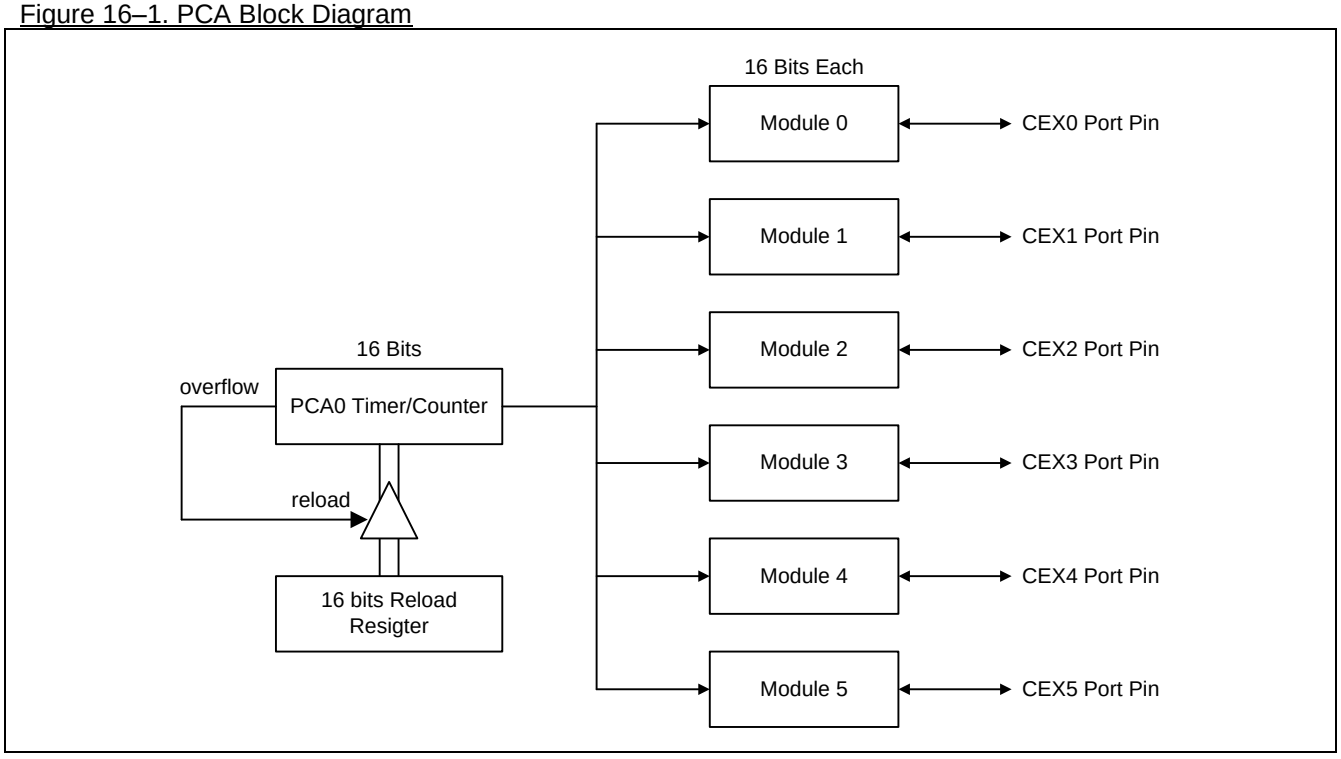

16.2. PCA Timer/Counter

The timer/counter for the PCA is a auto-reload 16-bit timer consisting of registers CH and CL (the high and low bytes of the count values), CHRL, CLRL (the high and low bytes reload registers), as shown in Figure 16–2. CHRL and CLRL are reloaded to CH and CL at each time overflow on {CH+CL} counter which can change the PCA cycle time for variable PWM resolution, such as 7-bit or 9-bit PWM.

{CH + CL} is the common time base for all modules and its clock input can be selected from the following source:
- 1/12 the system clock frequency,
- 1/2 the system clock frequency,
- the Timer 0 overflow, which allows for a range of slower clock inputs to the timer,
- external clock input, 1-to-0 transitions, on ECI pin (P2.1/P3.2),
- directly from the system clock frequency,
- the SIBRG overflow, S1TOF.

Special Function Register CMOD contains the Count Pulse Select bits (**CPS2**, CPS1 and CPS0) to specify the PCA timer input. This register also contains the ECF bit which enables an interrupt when the counter overflows. In addition, the user has the option of turning off the PCA timer during Idle Mode by setting the Counter Idle bit (CIDL). This can further reduce power consumption during Idle mode.

Figure 16–2. PCA Timer/Counter

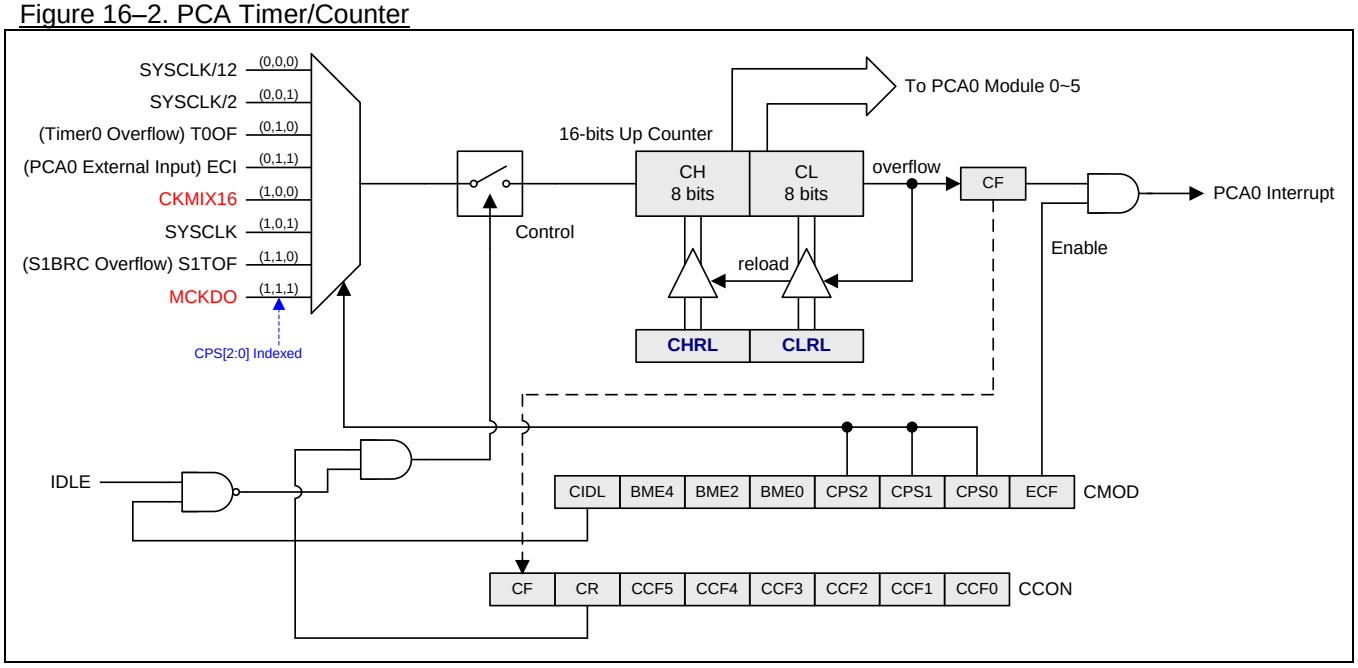

CMOD: PCA Counter Mode Register

SFR Page = 0 Only

SFR Address = 0xD9 RESET = 0000-0000

7	6	5	4	3	2	1	0
CIDL	BME4	BME2	BME0	CPS2	CPS1	CPS0	ECF
R/W	**R/W**	**R/W**	**R/W**	**R/W**	**R/W**	**R/W**	**R/W**

Bit 7: CIDL, PCA counter Idle control.
0: Lets the PCA counter continue functioning during Idle mode.
1: Lets the PCA counter be gated off during Idle mode.

Bit 6: BME4, Buffer Mode Enable on PCA module 4/5.
0: PCA Module 4/5 buffer mode disabled.
1: PCA Module 4/5 buffer mode enabled.

Bit 5: BME2, Buffer Mode Enable on PCA module 2/3.
0: PCA Module 2/3 buffer mode disabled.

1: PCA Module 2/3 buffer mode enabled.

Bit 4: BME0, Buffer Mode Enable on PCA module 0/1.
0: PCA Module 0/1 buffer mode disabled.
1: PCA Module 0/1 buffer mode enabled.

Bit 3~1: CPS2-CPS0, PCA counter clock source select bits.

CPS1	CPS1	CPS0	PCA Clock Source
0	0	0	Internal clock, (system clock)/12
0	0	1	Internal clock, (system clock)/2
0	1	0	Timer 0 overflow
0	1	1	External clock at the ECI pin
1	0	0	CKMI x16 output
1	0	1	Internal clock, (system clock)/1
1	1	0	S1BRT overflow
1	1	1	MCK Divider Output

Bit 0: ECF, Enable PCA counter overflow interrupt.
0: Disables an interrupt when CF bit (in CCON register) is set.
1: Enables an interrupt when CF bit (in CCON register) is set.

The CCON register shown below contains the run control bit for the PCA and the flags for the PCA timer and each module. To run the PCA the CR bit (CCON.6) must be set by software. The PCA is shut off by clearing this bit. The CF bit (CCON.7) is set when the PCA counter overflows and an interrupt will be generated if the ECF bit in the CMOD register is set. The CF bit can only be cleared by software. CCF0 to CCF5 are the interrupt flags for module 0 to module 5, respectively, and they are set by hardware when either a match or a capture occurs. These flags also can only be cleared by software. The PCA interrupt system is shown Figure 16–3.

CCON: PCA Counter Control Register

SFR Page = 0 only
SFR Address = 0xD8 RESET = 0000-0000

7	6	5	4	3	2	1	0
CF	CR	CCF5	CCF4	CCF3	CCF2	CCF1	CCF0
R/W	**R/W**	**R/W**	**R/W**	**R/W**	**R/W**	**R/W**	**R/W**

Bit 7: CF, PCA Counter Overflow flag.
0: Only be cleared by software.
1: Set by hardware when the counter rolls over. CF flag can generate an interrupt if bit ECF in CMOD is set. CF may be set by either hardware or software.

Bit 6: CR, PCA Counter Run control bit.
0: Must be cleared by software to turn the PCA counter off.
1: Set by software to turn the PCA counter on.

Bit 5: CCF5, PCA Module 5 interrupt flag.
0: Must be cleared by software.
1: Set by hardware when a match or capture occurs.

Bit 4: CCF4, PCA Module 4 interrupt flag.
0: Must be cleared by software.
1: Set by hardware when a match or capture occurs.

Bit 3: CCF3, PCA Module 3 interrupt flag.
0: Must be cleared by software.
1: Set by hardware when a match or capture occurs.

Bit 2: CCF2, PCA Module 2 interrupt flag.
0: Must be cleared by software.
1: Set by hardware when a match or capture occurs.

Bit 1: CCF1, PCA Module 1 interrupt flag.
0: Must be cleared by software.
1: Set by hardware when a match or capture occurs.

Bit 0: CCF0, PCA Module 0 interrupt flag.
0: Must be cleared by software.
1: Set by hardware when a match or capture occurs.

Figure 16–3. PCA Interrupt System

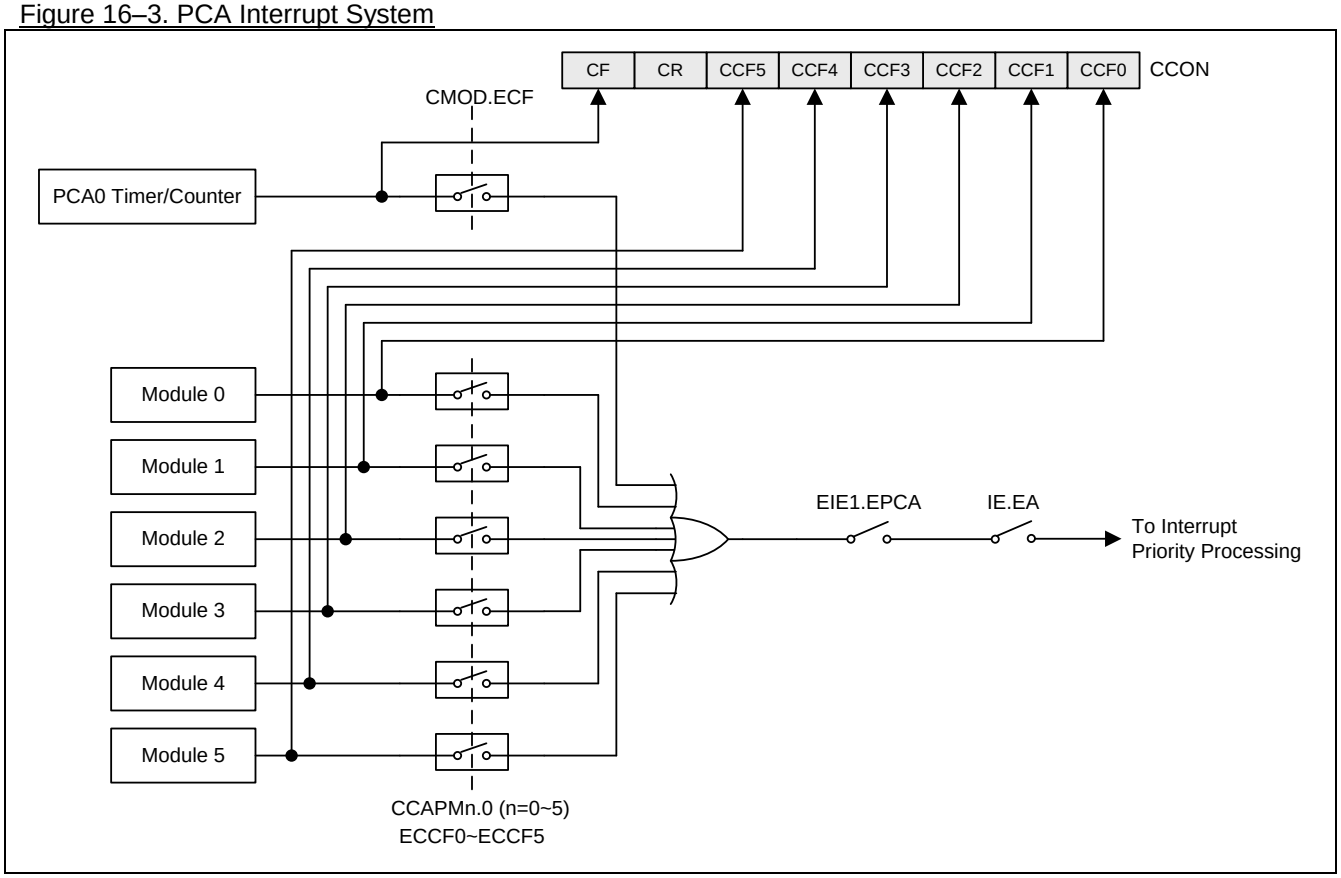

CH: PCA base timer High

SFR Page = 0 only
SFR Address = 0xF9 RESET = 0000-0000

7	6	5	4	3	2	1	0
CH.7	CH.6	CH.5	CH.4	CH.3	CH.2	CH.1	CH.0
R/W	**R/W**	**R/W**	**R/W**	**R/W**	**R/W**	**R/W**	**R/W**

CL: PCA base timer Low

SFR Page = 0 only
SFR Address = 0xE9 RESET = 0000-0000

7	6	5	4	3	2	1	0
CL.7	CL.6	CL.5	CL.4	CL.3	CL.2	CL.1	CL.0
R/W	**R/W**	**R/W**	**R/W**	**R/W**	**R/W**	**R/W**	**R/W**

CHRL: PCA CH Reload Register

SFR Page = 0 only

SFR Address = 0xCF RESET = 0000-0000

7	6	5	4	3	2	1	0
CHRL.7	CHRL.6	CHRL.5	CHRL.4	CHRL.3	CHRL.2	CHRL.1	CHRL.0
R/W	**R/W**	**R/W**	**R/W**	**R/W**	**R/W**	**R/W**	**R/W**

CLRL: PCA CL Reload Register

SFR Page = 0 only

SFR Address = 0xCE RESET = 0000-0000

7	6	5	4	3	2	1	0
CLRL.7	CLRL.6	CLRL.5	CLRL.4	CLRL.3	CLRL.2	CLRL.1	CLRL.0
R/W	**R/W**	**R/W**	**R/W**	**R/W**	**R/W**	**R/W**	**R/W**

16.3. Compare/Capture Modules

Each of the compare/capture module 0~5 has a mode register called CCAPMn (n = 0,1,2,3,4 or 5) to select which function it will perform. Note the ECCFn bit which enables an interrupt to occur when a module's interrupt flag is set.

CCAPMn: PCA Module Compare/Capture Register, n=0~5

SFR Page = 0 only

SFR Address = 0xDA~0xDF RESET = 0000-0000

7	6	5	4	3	2	1	0
DTEn	ECOMn	CAPPn	CAPNn	MATn	TOGn	PWMn	ECCFn
R/W	**R/W**	**R/W**	**R/W**	**R/W**	**R/W**	**R/W**	**R/W**

Bit 7: DTEn. Enable Dead-Time control on PWMHn/PWMLn output pair. This bit is only valid on n= 0, 2 and 4 and the dead-time function is active when PWM channel is operating in buffer mode. The channel buffer mode is enabled by BME0, BME2 or BME4 in CMOD.
0: Disable the Dead-Time control on PWMn output.
1: Enable the Dead-Time control on PWMn output.

Bit 6: ECOMn, Enable Comparator
0: Disable the digital comparator function.
1: Enables the digital comparator function.

Bit 5: CAPPn, Capture Positive enabled.
0: Disable the PCA capture function on CEXn positive edge detected.
1: Enable the PCA capture function on CEXn positive edge detected.

Bit 4: CAPNn, Capture Negative enabled.
0: Disable the PCA capture function on CEXn positive edge detected.
1: Enable the PCA capture function on CEXn negative edge detected.

Bit 3: MATn, Match control.
0: Disable the digital comparator match event to set CCFn.
1: A match of the PCA counter with this module’s compare/capture register causes the CCFn bit in CCON to be set.

Bit 2: TOGn, Toggle control.
0: Disable the digital comparator match event to toggle CEXn.
1: A match of the PCA counter with this module’s compare/capture register causes the CEXn pin to toggle.

Bit 1: PWMn, PWM control.
0: Disable the PWM mode in PCA module.
1: Enable the PWM function and cause CEXn pin to be used as a pulse width modulated output.

Bit 0: ECCFn, Enable CCFn interrupt.
0: Disable compare/capture flag CCFn in the CCON register to generate an interrupt.
1: Enable compare/capture flag CCFn in the CCON register to generate an interrupt.

Note: The bits CAPNn (CCAPMn.4) and CAPPn (CCAPMn.5) determine the edge on which a capture input will be active. If both bits are set, both edges will be enabled and a capture will occur for either transition.

Module 6~7 only has the PWM function which is enabled by setting CCAPMn.PWMn (n = 6 or 7). There is no interrupt flag in these two modules.

Each module also has a pair of 8-bit compare/capture registers (CCAPnH, CCAPnL) associated with it. These registers are used to store the time when a capture event occurred or when a compare event should occur. When a module is used in the PWM mode, in addition to the above two registers, an extended register PCAPWMn is used to improve the range of the duty cycle of the output. The improved range of the duty cycle starts from 0%, up to 100%, with a step of 1/256. **About 10/12/16 bit PWM….**

CCAPnH: PCA Module n Capture High Register, n=0~5

SFR Page = **0 only**

SFR Address = 0xFA~0xFF RESET = 0000-0000

7	6	5	4	3	2	1	0
CCAPnH.7	CCAPnH.6	CCAPnH.5	CCAPnH.4	CCAPnH.3	CCAPnH.2	CCAPnH.1	CCAPnH.0
R/W	**R/W**	**R/W**	**R/W**	**R/W**	**R/W**	**R/W**	**R/W**

CCAPnL: PCA Module n Capture Low Register, n=0~5

SFR Page = **0 only**

SFR Address = 0xEA~0xEF RESET = 0000-0000

7	6	5	4	3	2	1	0
CCAPnL.7	CCAPnL.6	CCAPnL.5	CCAPnL.4	CCAPnL.3	CCAPnL.2	CCAPnL.1	CCAPnL.0
R/W	**R/W**	**R/W**	**R/W**	**R/W**	**R/W**	**R/W**	**R/W**

PCAPWMn: PWM Mode Auxiliary Register, n=0~5

SFR Page = **0 only**

SFR Address = 0xF2~0xF7 RESET = 0000-0000

7	6	5	4	3	2	1	0
PnRS1	PnRS0	PnPS2	PnPS1	PnPS0	PnINV	ECAPnH	ECAPnL
R/W	**R/W**	**R/W**	**R/W**	**R/W**	**R/W**	**R/W**	**R/W**

Bit 1: ECAPnH, Extended 9th bit (MSB bit), associated with CCAPnH to become a 9-bit register used in PWM mode.

Bit 0: ECAPnL, Extended 9th bit (MSB bit), associated with CCAPnL to become a 9-bit register used in PWM mode.

16.4. Operation Modes of the PCA

Table 16–1 shows the CCAPMn register settings for the various PCA functions.

Table 16–1. PCA Module Modes

ECOMn	CAPPn	CAPNn	MATn	TOGn	PWMn	ECCFn	Module Function
0	0	0	0	0	0	0	No operation
X	1	0	0	0	0	X	16-bit capture by a positive-edge trigger on CEXn
X	0	1	0	0	0	X	16-bit capture by a negative-edge trigger on CEXn
X	1	1	0	0	0	X	16-bit capture by a transition on CEXn
1	0	0	1	0	0	X	16-bit Software Timer
1	0	0	1	1	0	X	16-bit High Speed Output
1	0	0	0	0	1	0	Pulse Width Modulator (PWM)

16.4.1. Capture Mode

To use one of the PCA modules in the capture mode, either one or both of the bits CAPN and CAPP for that module must be set. The external CEX input for the module is sampled for a transition. When a valid transition occurs the PCA hardware loads the value of the PCA counter registers (CH and CL) into the module's capture registers (CCAPnL and CCAPnH). If the CCFn and the ECCFn bits for the module are both set, an interrupt will be generated.

Figure 16–4. PCA Capture Mode

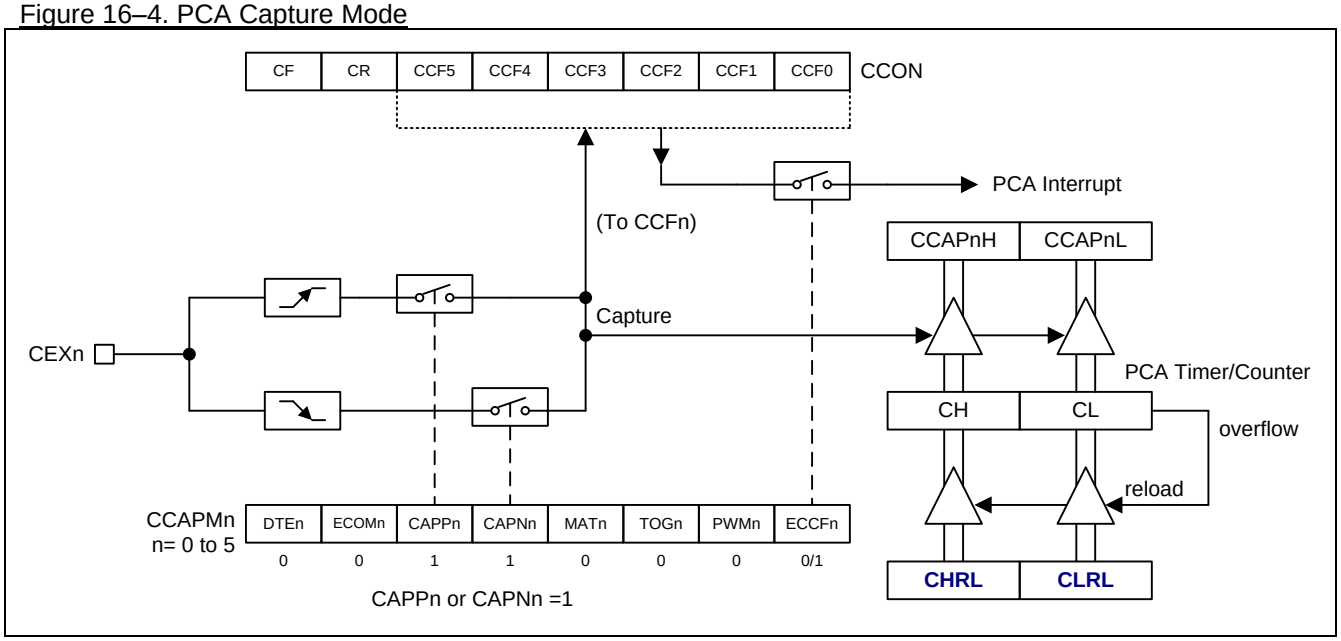

Figure 16–5. PCA Capture for Buffer Mode (BMEn=1, n= 0, 2, 4)

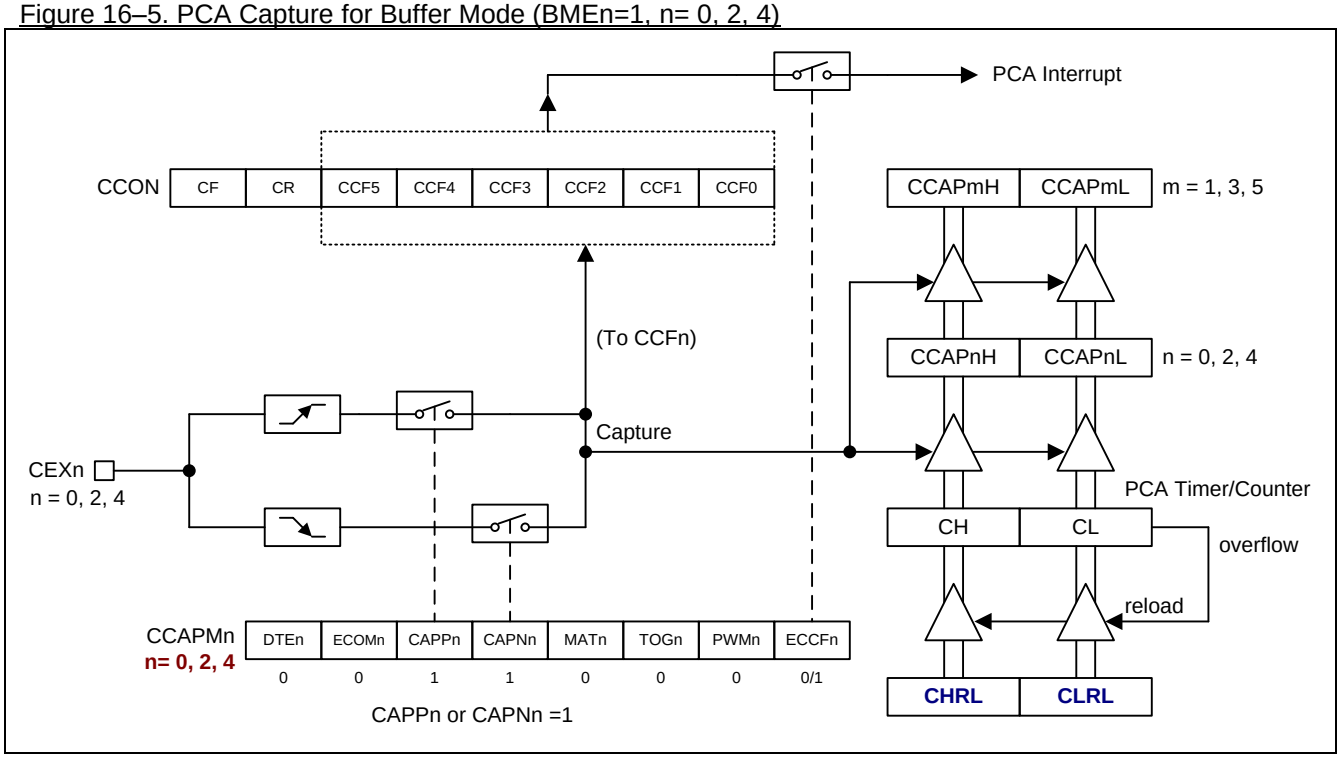

Figure 16–6. PCA Capture waveform for Buffer Mode

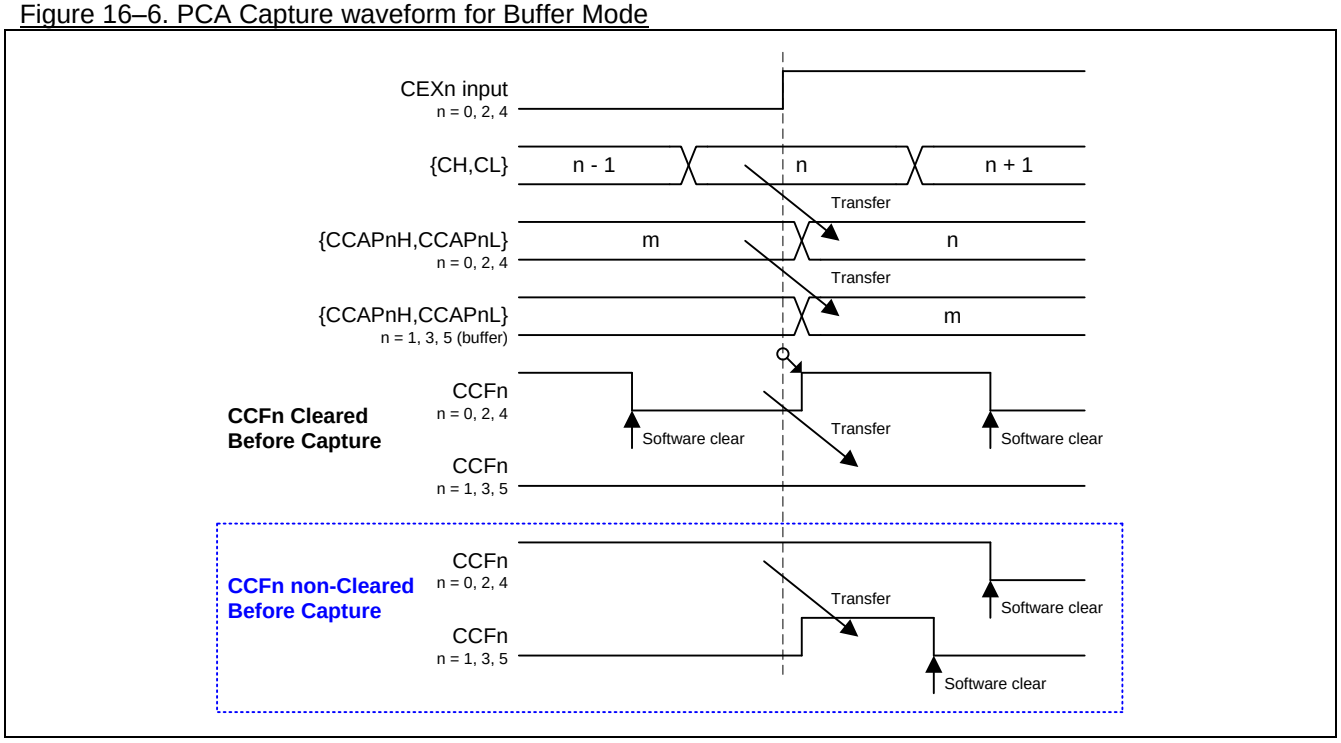

16.4.2. 16-bit Software Timer Mode

The PCA modules can be used as software timers by setting both the ECOM and MAT bits in the module's CCAPMn register. The PCA timer will be compared to the module's capture registers, and when a match occurs an interrupt will occur if the CCFn and the ECCFn bits for the module are both set.

Figure 16–7. PCA Software Timer Mode

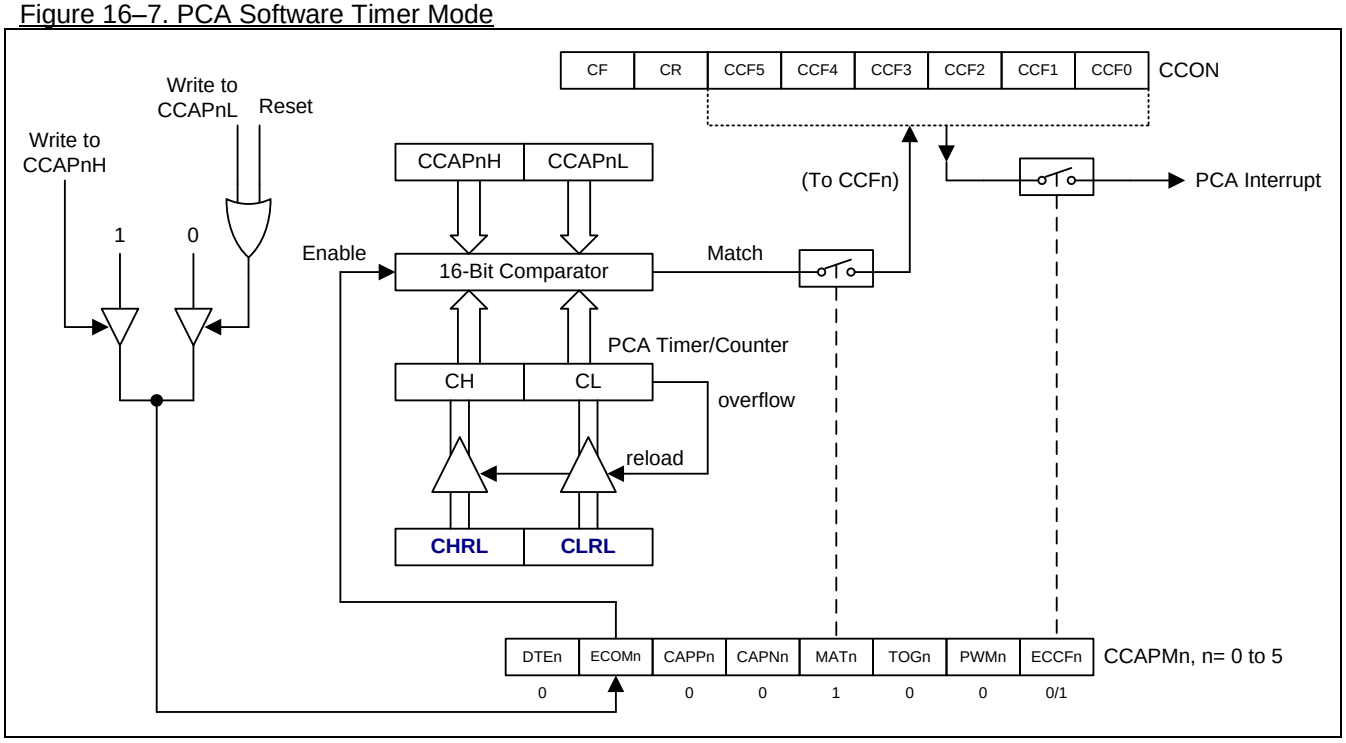

16.4.3. High Speed Output Mode

In this mode the CEX output associated with the PCA module will toggle each time a match occurs between the PCA counter and the module's capture registers. To activate this mode, the TOG, MAT and ECOM bits in the module's CCAPMn register must be set.

Figure 16–8. PCA High Speed Output Mode

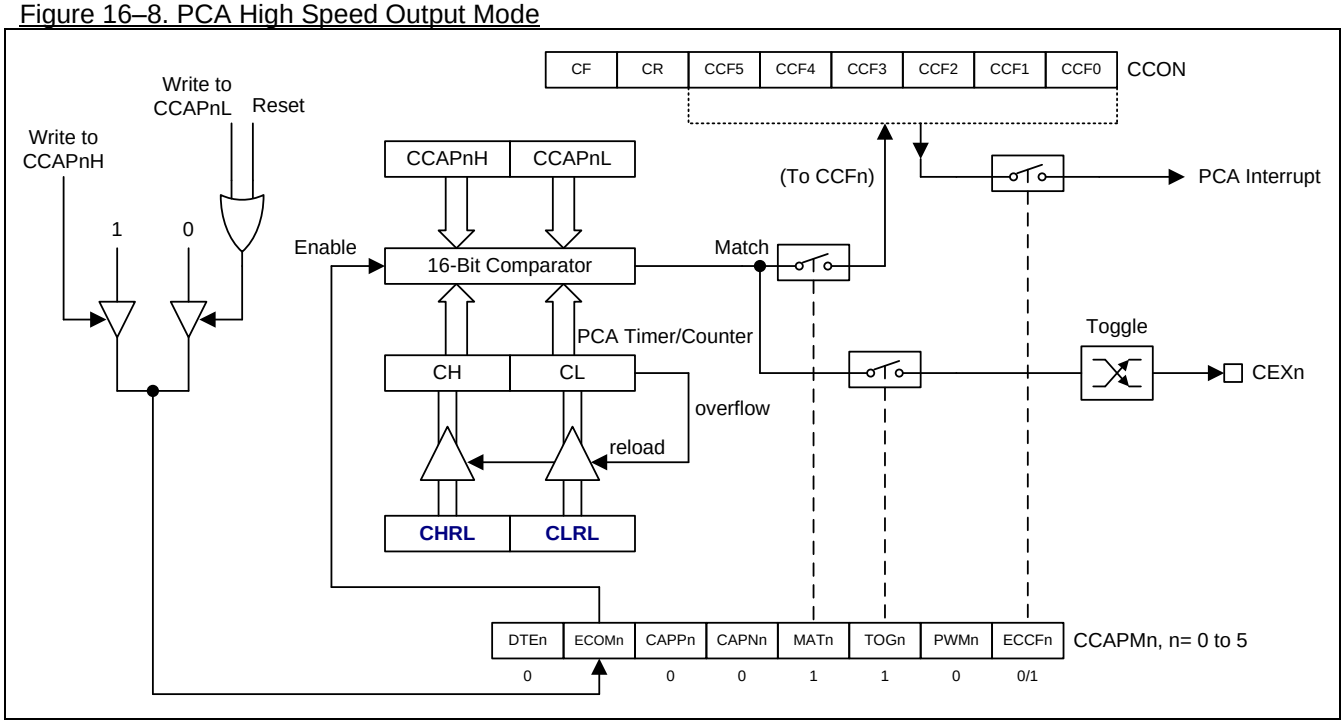

16.4.4. PWM Mode

All of the PCA modules can be used as PWM outputs. The frequency of the output depends on the clock source for the PCA timer. All of the modules will have the same frequency of output because they all share the PCA timer.

The duty cycle of each module is determined by the module's capture register CCAPnL and the extended 9th bit, ECAPnL. When the 9-bit value of { 0, [CL] } is *less than* the 9-bit value of { ECAPnL, [CCAPnL] } the output will be low, and if *equal to or greater than* the output will be high.

When CL overflows from 0xFF to 0x00, { ECAPnL, [CCAPnL] } is reloaded with the value of { ECAPnH, [CCAPnH] }. This allows updating the PWM without glitches. The PWMn and ECOMn bits in the module's CCAPMn register must be set to enable the PWM mode.

Using the 9-bit comparison, the duty cycle of the output can be improved to really start from 0%, and up to 100%. The formula for the duty cycle is:

Duty Cycle = 1 – { ECAPnH, [CCAPnH] } / 256.

Where, *[CCAPnH]* is the 8-bit value of the CCAPnH register, and *ECAPnH* (bit-1 in the PCAPWMn register) is 1-bit value. So, *{ ECAPnH, [CCAPnH] }* forms a 9-bit value for the 9-bit comparator.

For examples,
a. If ECAPnH=0 & CCAPnH=0x00 (i.e., 0x000), the duty cycle is 100%.
b. If ECAPnH=0 & CCAPnH=0x40 (i.e., 0x040) the duty cycle is 75%.
c. If ECAPnH=0 & CCAPnH=0xC0 (i.e., 0x0C0), the duty cycle is 25%.
d. If ECAPnH=1 & CCAPnH=0x00 (i.e., 0x100), the duty cycle is 0%.

Figure 16–9. PCA PWM Mode

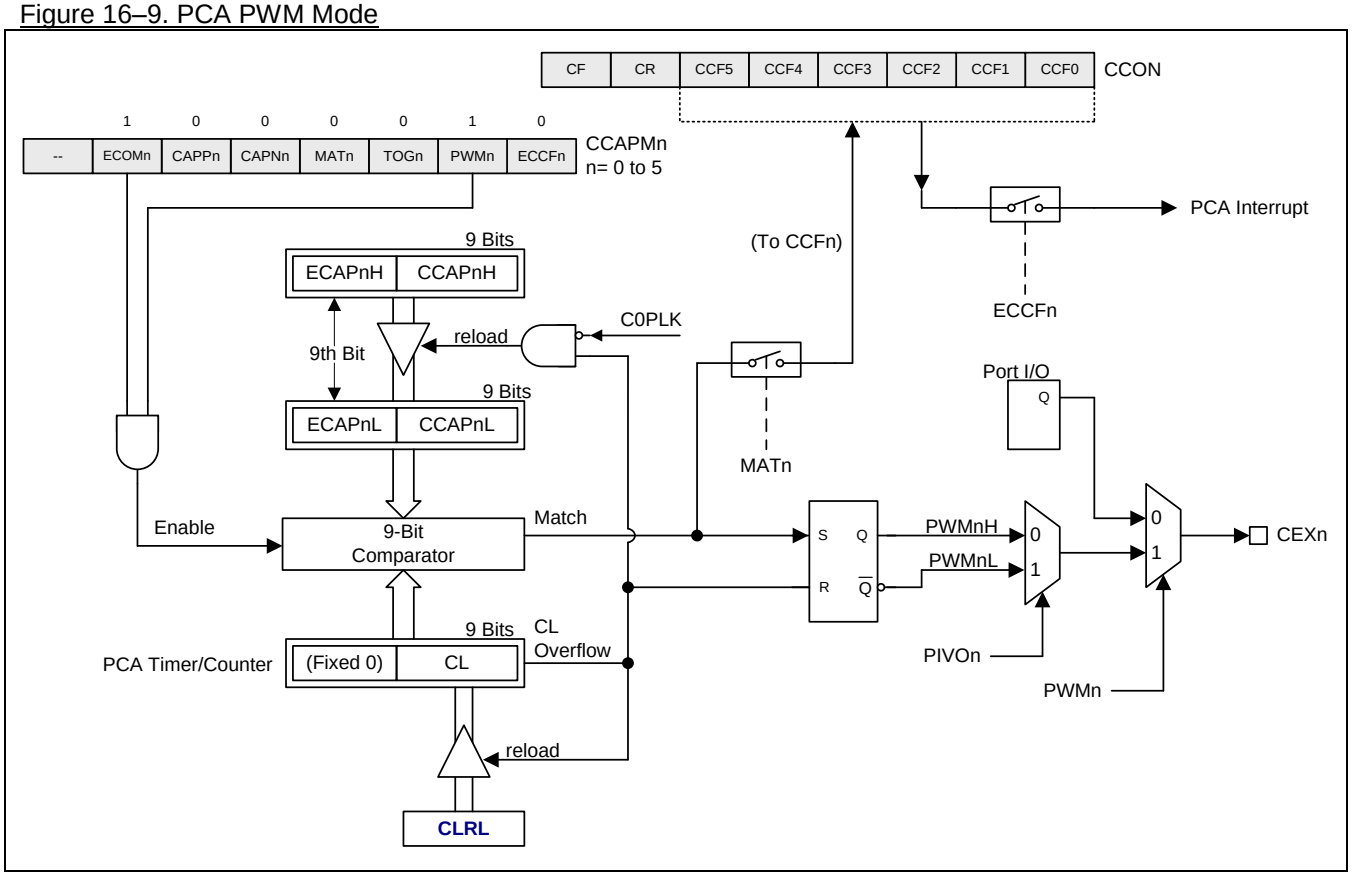

16.4.5. Enhance PWM Mode

The PCA provides the variable PWM mode to enhance the control capability on PWM application. There are additional 10/12/16 bits PWM can be assigned in each channel and each PWM channel with different resolution and different phase delay can operate concurrently.

Figure 16–10. PCA Enhance PWM for 10/12/16-bit PWM Mode

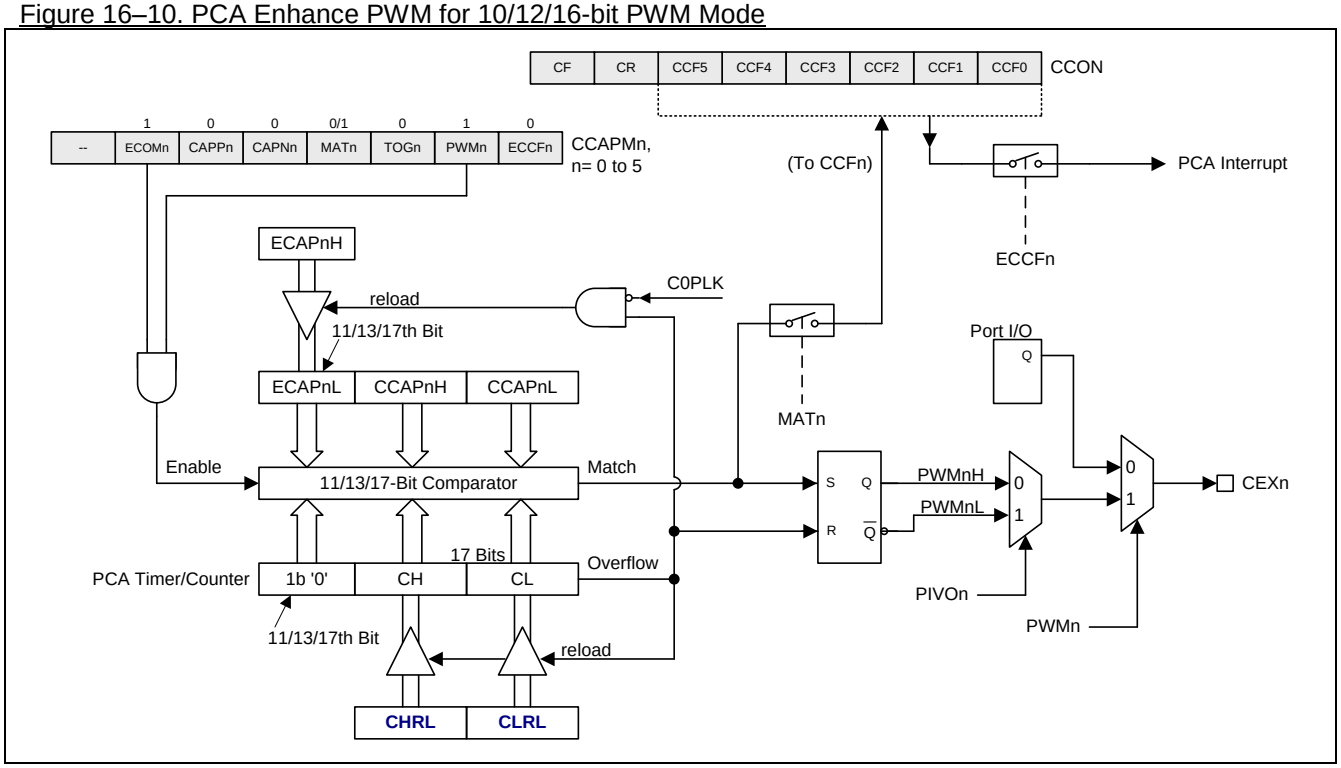

Figure 16–11. PCA Enhance PWM for Buffer Mode

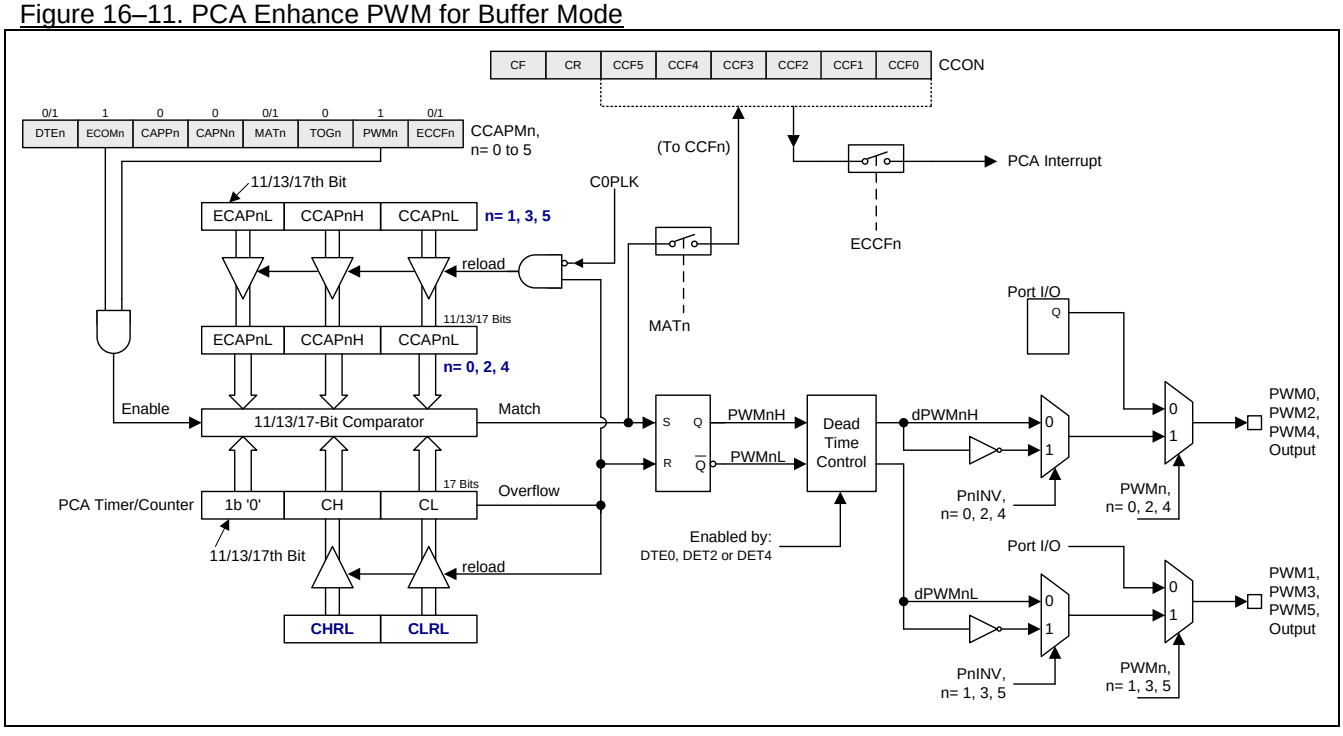

PCAPWMn: PWM Mode Auxiliary Register, n=0~5

SFR Page = 0 only

SFR Address = 0xF2~0xF7 RESET = 0000-0000

7	6	5	4	3	2	1	0
PnRS1	PnRS0	PnPS2	PnPS1	PnPS0	PnINV	ECAPnH	ECAPnL
R/W	**R/W**	**R/W**	**R/W**	**R/W**	**R/W**	**R/W**	**R/W**

Bit 7~6: PWMn Resolution Setting 1~0.
00: 8 bit PWMn, the overflow is active when [CH, CL] counts XXXX-XXXX-1111-1111 → XXXX-XXXX-0000-0000.
01: 10 bit PWMn, the overflow is active when [CH, CL] counts XXXX-XX11-1111-1111 → XXXX-XX00-0000-0000.
10: 12 bit PWMn, the overflow is active when [CH, CL] counts XXXX-1111-1111-111 → XXXX-0000-0000-0000.
11: 16 bit PWMn, the overflow is active when [CH, CL] counts 1111-1111-1111-1111→ 0000-0000-0000-0000.

Bit 5~3: PWMn Phase Setting 2~0.
000: The enabled PWM channel starts at 0 degree.
001: The enabled PWM channel starts at 90 degree.
010: The enabled PWM channel starts at 180 degree.
011: The enabled PWM channel starts at 270 degree.
100: The enabled PWM channel starts at 120 degree.
101: The enabled PWM channel starts at 240 degree.
110: The enabled PWM channel starts at 60 degree.
111: The enabled PWM channel starts at 300 degree.

In default PCA PWM mode, all PWM outputs are cleared on CL overflow (See Figure 16–9). All PWM outputs go to low simultaneously and are set to high by the match event from individual CCAPnL setting and CL counter. This mode PWM behaves a same phase PWM because the PWM outputs always start at the same time. The PCA enhanced PWM mode provides the phase delay function on each PWM channel with different PWM resolution. The following table indicates the counter value to clear PWM output if comparator result is matched. The set condition of PWM outputs keeps the original matched event by {CCFnH, CCFnL} and {CH, CL}. So after setting the phase delay parameter, software only take care the value of the PWM END count (PWM output SET) to implement the variable phase delay PWM.

Phase	0°/360°	90°	180°	270°	120°	240°	60°	300°
PWM8	00	40	80	C0	55	AA	2A	D5
PWM10	{00}00	{01}00	{10}00	{11}00	{01}55	{10}AA	{00}AA	{11}55
PWM12	000	400	800	C00	555	AAA	2AA	D55
PWM16	0000	4000	8000	C000	5555	AAAA	2AAA	D555

Bit 2: Invert PWM output on CEXn.
0: Non-inverted PWM output.
1: Inverted PWM output.

Bit 1: ECAPnH: Extended MSB bit, associated with CCAPnH to become a 9th-bit register used in 8-bit PWM mode. As well as for 10/12/16 bit PWM, it will become a 11th/13th/17th bit register.

Bit 0: ECAPnL: Extended MSB bit, associated with CCAPnL to become a 9th-bit register used in 8-bit PWM mode. As well as for 10/12/16 bit PWM, it will become a 11th/13th/17th bit register.

CMOD: PCA Counter Mode Register

SFR Page = 0 only

SFR Address = 0xD9 POR+RESET = 0000-x000

7	6	5	4	3	2	1	0
CIDL	BME4	BME2	BME0	CPS2	CPS1	CPS0	ECF
R/W	**R/W**	**R/W**	**R/W**	**R/W**	**R/W**	**R/W**	**R/W**

Bit 6: BME4, Buffer Mode Enable on PCA module 4/5. It is only valid on both of PCA module 4 and module 5 in capture mode or PWM mode.
0: PCA Module 4/5 buffer mode disabled.
1: PCA Module 4/5 buffer mode enabled.

Bit 5: BME2, Buffer Mode Enable on PCA module 2/3. It is only valid on both of PCA module 2 and module 3 in capture mode or PWM mode.
0: PCA Module 2/3 buffer mode disabled.
1: PCA Module 2/3 buffer mode enabled.

Bit 4: BME0, Buffer Mode Enable on PCA module 0/1. It is only valid on both of PCA module 0 and module 1 in capture mode or PWM mode.
0: PCA Module 0/1 buffer mode disabled.
1: PCA Module 0/1 buffer mode enabled.

17. Programmable Counter Array 1 (PCA1)

The **MG82FG5C64** is equipped with a secondary PCA (called PCA1), which is the same as the first PCA (PCA0) except the following differences:

(1) PCA1 has no dead-time control PWM.
(2) There is no central-aligned PWM in PCA1.
(3) PCA1 does not implement Break function.

The PCA1 and PCA0 in **MG82FG5C64** can operate simultaneously in identical or different modes and communication speeds.

Figure 17–1. PCA1 Block Diagram

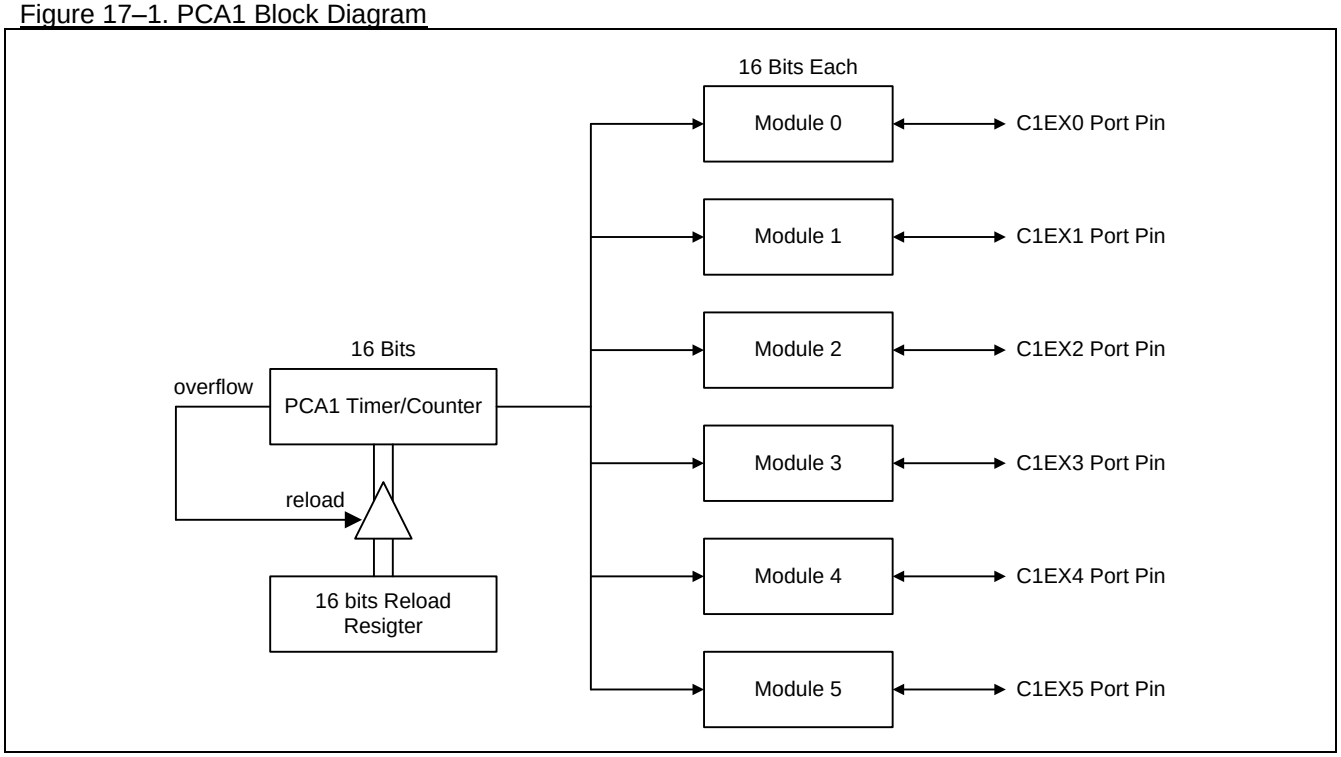

Figure 17–2. PCA1 Timer/Counter

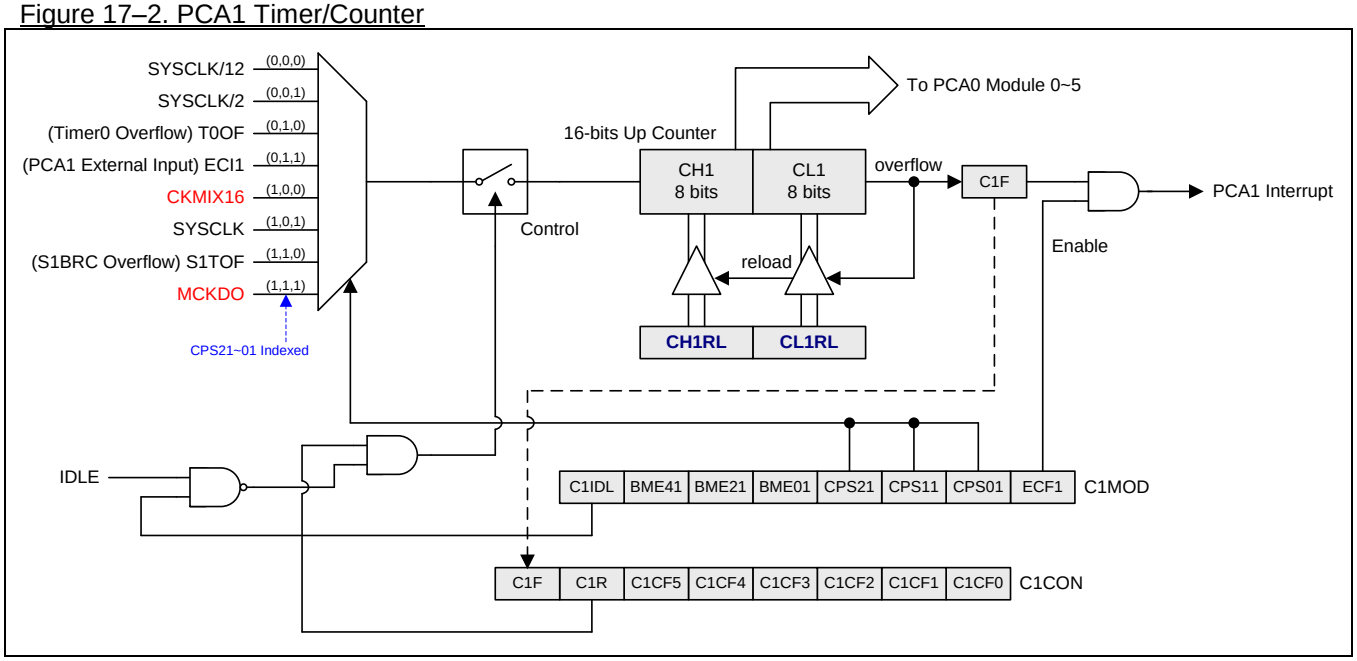

Figure 17–3. PCA Interrupt System

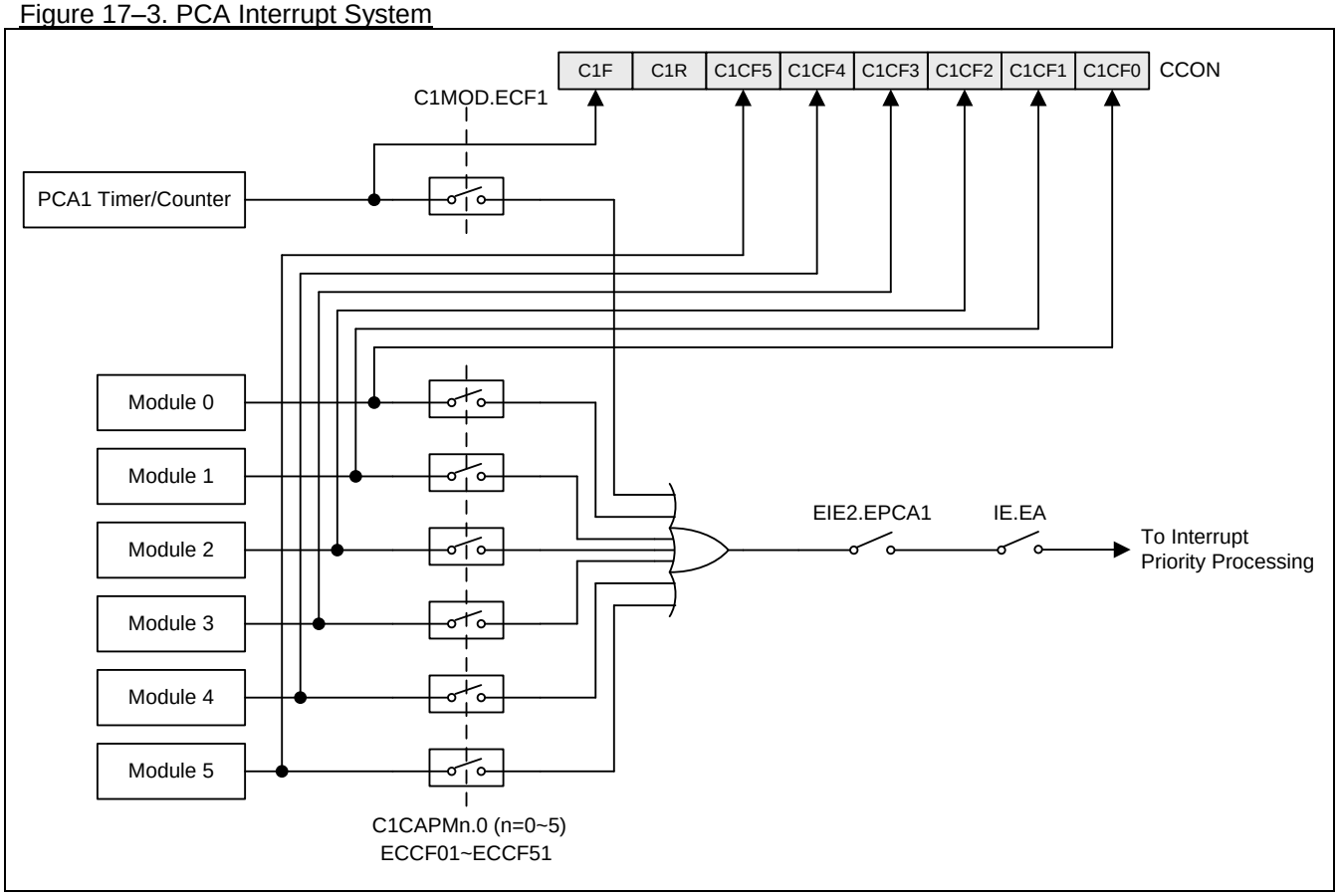

17.1. PCA1 Register

The SFR function of each control bit is fully compatible to PCA0. Please refer PCA0 Register to get the SFR function definition.

C1CON: PCA1 Counter Control Register

SFR Page = 1 only
SFR Address = 0xD8 RESET = 0000-0000

7	6	5	4	3	2	1	0
C1F	C1R	C1CF5	C1CF4	C1CF3	C1CF2	C1CF1	C1CF0
R/W	R/W	R/W	R/W	R/W	R/W	R/W	R/W

C1MOD: PCA1 Counter Mode Register

SFR Page = 1 Only
SFR Address = 0xD9 RESET = 0000-0000

7	6	5	4	3	2	1	0
C1IDL	BME41	BME21	BME01	CPS21	CPS11	CPS01	ECF1
R/W	R/W	R/W	R/W	R/W	R/W	R/W	R/W

CH1: PCA1 base timer High

SFR Page = 1 only
SFR Address = 0xF9 RESET = 0000-0000

7	6	5	4	3	2	1	0
CH1.7	CH1.6	CH1.5	CH1.4	CH1.3	CH1.2	CH1.1	CH1.0
R/W	R/W	R/W	R/W	R/W	R/W	R/W	R/W

CL1: PCA1 base timer Low

SFR Page = 1 only
SFR Address = 0xE9 RESET = 0000-0000

7	6	5	4	3	2	1	0
CL1.7	CL1.6	CL1.5	CL1.4	CL1.3	CL1.2	CL1.1	CL1.0
R/W	R/W	R/W	R/W	R/W	R/W	R/W	R/W

CHRL: PCA CH1 Reload Register

SFR Page = 1 only
SFR Address = 0xCF RESET = 0000-0000

7	6	5	4	3	2	1	0
CH1RL.7	CH1RL.6	CH1RL.5	CH1RL.4	CH1RL.3	CH1RL.2	CH1RL.1	CH1RL.0
R/W	R/W	R/W	R/W	R/W	R/W	R/W	R/W

CL1RL: PCA CL1 Reload Register

SFR Page = 1 only
SFR Address = 0xCE RESET = 0000-0000

7	6	5	4	3	2	1	0
CL1RL.7	CL1RL.6	CL1RL.5	CL1RL.4	CL1RL.3	CL1RL.2	CL1RL.1	CL1RL.0
R/W	R/W	R/W	R/W	R/W	R/W	R/W	R/W

C1CAPMn: PCA1 Module Compare/Capture Register, n=0~5

SFR Page = 1 only
SFR Address = 0xDA~0xDF RESET = x000-0000

7	6	5	4	3	2	1	0
--	ECOMn1	CAPPn1	CAPNn1	MATn1	TOGn1	PWMn1	ECCFn1
W	R/W	R/W	R/W	R/W	R/W	R/W	R/W

C1CAPnH: PCA1 Module n Capture High Register, n=0~5

SFR Page = **1 only**

SFR Address = 0xFA~0xFF RESET = 0000-0000

7	6	5	4	3	2	1	0
.7	.6	.5	.4	.3	.2	.1	.0
R/W	**R/W**	**R/W**	**R/W**	**R/W**	**R/W**	**R/W**	**R/W**

C1CAPnL: PCA1 Module n Capture Low Register, n=0~5

SFR Page = **1 only**

SFR Address = 0xEA~0xEF RESET = 0000-0000

7	6	5	4	3	2	1	0
.7	.6	.5	.4	.3	.2	.1	.0
R/W	**R/W**	**R/W**	**R/W**	**R/W**	**R/W**	**R/W**	**R/W**

C1PWMn: PCA1 PWM Mode Auxiliary Register, n=0~5

SFR Page = **1 Only**

SFR Address = 0xF2~0xF7 RESET = 0000-0000

7	6	5	4	3	2	1	0
PnRS11	PnRS01	PnPS21	PnPS11	PnPS01	PnINV1	ECAPnH1	ECAPnL1
R/W	**R/W**	**R/W**	**R/W**	**R/W**	**R/W**	**R/W**	**R/W**

AUXR4: Auxiliary Register 4

SFR Page = 1 only

SFR Address = 0xA4 RESET = 0000-0000

7	6	5	4	3	2	1	0
C1IC2S1	**C1IC2S0**	**C1IC0S1**	**C1IC0S0**	AC1OE	AC1FLT1	AC0OE	AC0FLT1
R/W	**R/W**	**R/W**	**R/W**	**R/W**	**R/W**	**R/W**	**R/W**

Bit 7~6: C1IC2S1~0, PCA1 Input Channel 2 input Selection.

C1IC2S1~0	C1EX2 input
00	C1EX2 Port Pin
01	AC1OUT
10	--
11	AC0OUT

Bit 5~4: C1IC0S1~0, PCA1 Input Channel 0 input Selection.

C1IC0S1~0	C1EX0 input
00	C1EX0 Port Pin
01	AC0OUT
10	--
11	ILRCO

18. Serial Port 0 (UART0)

The serial port 0 of **MG82FG5C64** support full-duplex transmission, meaning it can transmit and receive simultaneously. It is also receive-buffered, meaning it can commence reception of a second byte before a previously received byte has been read from the register. However, if the first byte still hasn't been read by the time reception of the second byte is complete, one of the bytes will be lost. The serial port receive and transmit registers are both accessed at special function register S0BUF. Writing to S0BUF loads the transmit register, and reading from S0BUF accesses a physically separate receive register.

The serial port can operate in **5** modes: Mode 0 provides *synchronous* communication while Modes 1, 2, and 3 provide *asynchronous* communication. The asynchronous communication operates as a full-duplex Universal Asynchronous Receiver and Transmitter (UART), which can transmit and receive simultaneously and at different baud rates. Mode 4 in UART0 supports SPI master operation which data rate setting is same as Mode 0.

Mode 0: 8 data bits (LSB first) are transmitted or received through RXD0. TXD0 always outputs the shift clock. The baud rate can be selected to 1/12 or **1/4** the system clock frequency by **URM0X3** setting in S0CFG register. In **MG82FG5C64**, the clock polarity of serial port Mode 0 can be selected by software. It is decided by P3.1 state before serial data shift in or shift out. Figure 18–4 and Figure 18–5 show the clock polarity waveform in Mode 0.

Mode 1: 10 bits are transmitted through TXD0 or received through RXD0. The frame data includes a start bit (0), 8 data bits (LSB first), and a stop bit (1), as shown in Figure 18–1. On receive, the stop bit would be loaded into RB80 in S0CON register. The baud rate is variable.

Figure 18–1. Mode 1 Data Frame

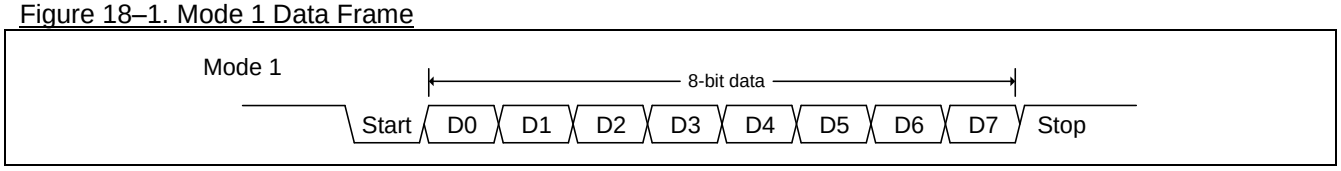

Mode 2: 11 bits are transmitted through TXD0 or received through RXD0. The frame data includes a start bit (0), 8 data bits (LSB first), a programmable 9th data bit, and a stop bit (1), as shown in Figure 18–2. On Transmit, the 9th data bit comes from TB80 in S0CON register can be assigned the value of 0 or 1. On receive, the 9th data bit would be loaded into RB80 in S0CON register, while the stop bit is ignored. The baud rate can be configured to 1/32 or 1/64 the system clock frequency.

Figure 18–2. Mode 2, 3 Data Frame

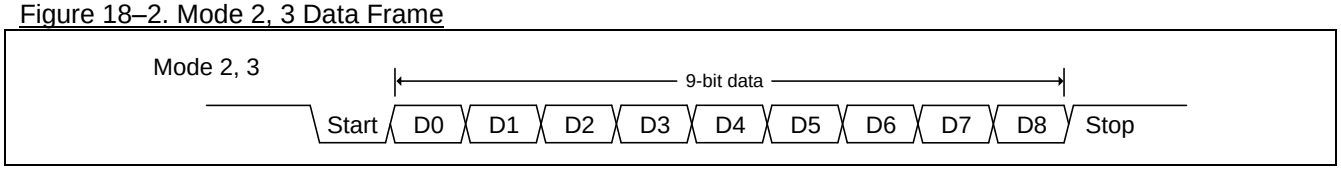

Mode 3: Mode 3 is the same as Mode 2 except the baud rate is variable.

In all four modes, transmission is initiated by any instruction that uses S0BUF as a destination register. In Mode 0, reception is initiated by the condition RI0=0 and REN0=1. In the other modes, reception is initiated by the incoming start bit with 1-to-0 transition if REN0=1.

In addition to the standard operation, the UART0 can perform framing error detection by looking for missing stop bits, and automatic address recognition.

18.1. Serial Port 0 Mode 0

Serial data enters and exits through RXD0. TXD0 outputs the shift clock. 8 bits are transmitted/received: 8 data bits (LSB first). The shift clock source can be selected to 1/12 or **1/4** the system clock frequency by **URM0X3** setting in S0CFG register. Figure 18–3 shows a simplified functional diagram of the serial port 0 in Mode 0.

Transmission is initiated by any instruction that uses S0BUF as a destination register. The “write to S0BUF” signal triggers the UART0 engine to start the transmission. The data in the S0BUF would be shifted into the RXD0(P3.0) pin by each raising edge shift clock on the TXD0(P3.1) pin. After eight raising edge of shift clocks passing, TI0 would be asserted by hardware to indicate the end of transmission and its interrupt vector can be switched to System Flag interrupt by BTI and UTIE gated. Figure 18–4 shows the transmission waveform in Mode 0.

Reception is initiated by the condition REN0=1 and RI0=0. At the next instruction cycle, the Serial Port 0 Controller writes the bits 11111110 to the receive shift register, and in the next clock phase activates Receive.

Receive enables Shift Clock which directly comes from RX Clock to the alternate output function of TXD0 pin. When Receive is active, the contents on the RXD0 pin would be sampled and shifted into shift register by falling edge of shift clock. After eight falling edge of shift clock, RI0 would be asserted by hardware to indicate the end of reception. Figure 18–5 shows the reception waveform in Mode 0.

When TXD0 is assigned on P3.1, the clock polarity can be selected by software setting on P3.1 data latch before serial transfer shifted. If P3.1 is set to logic high, the clock polarity is same as standard 8051. If P3.1 data latch is cleared to logic low, the clock polarity is inverted to standard 8051 UART Mode 0.

Figure 18–3. Serial Port 0 Mode 0

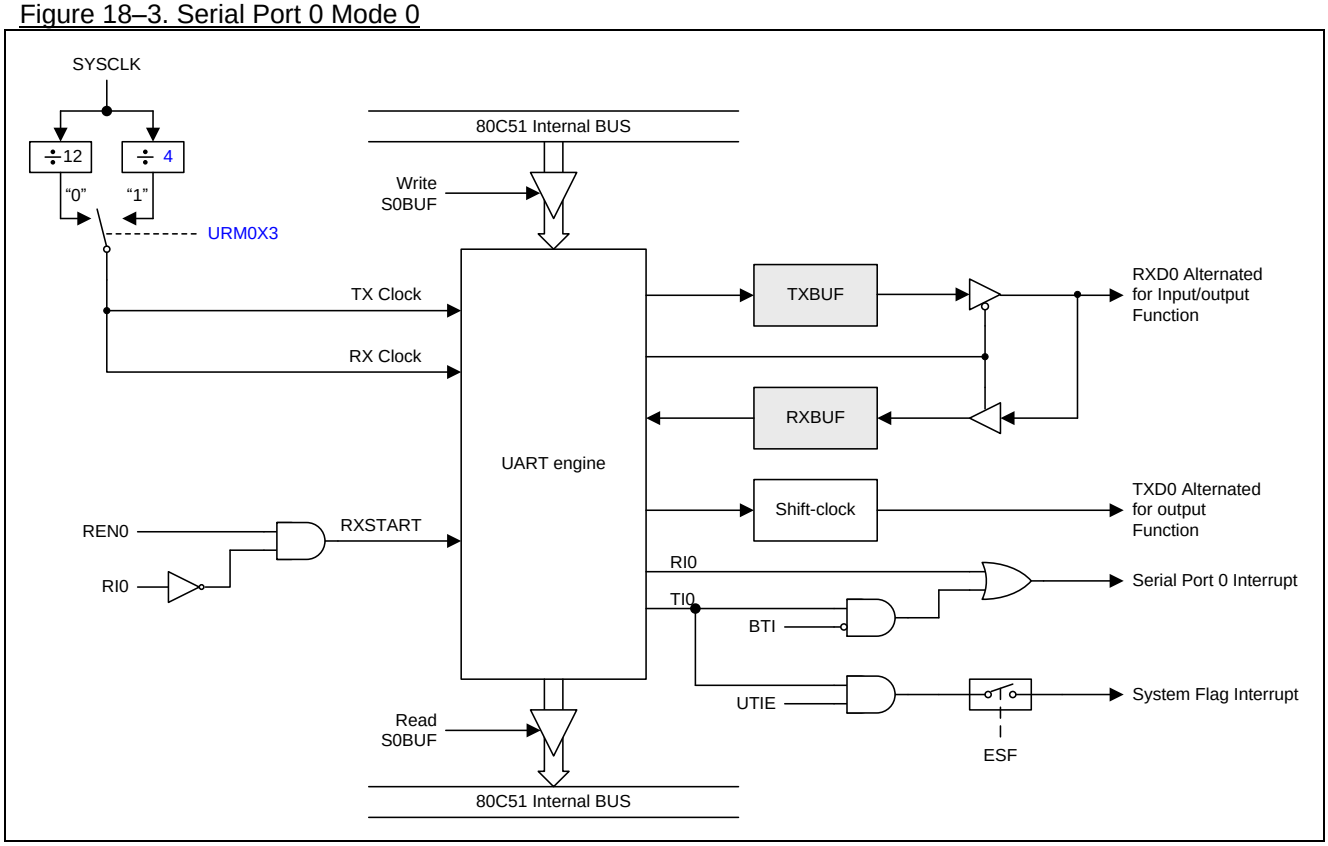

Figure 18–4. Mode 0 Transmission Waveform

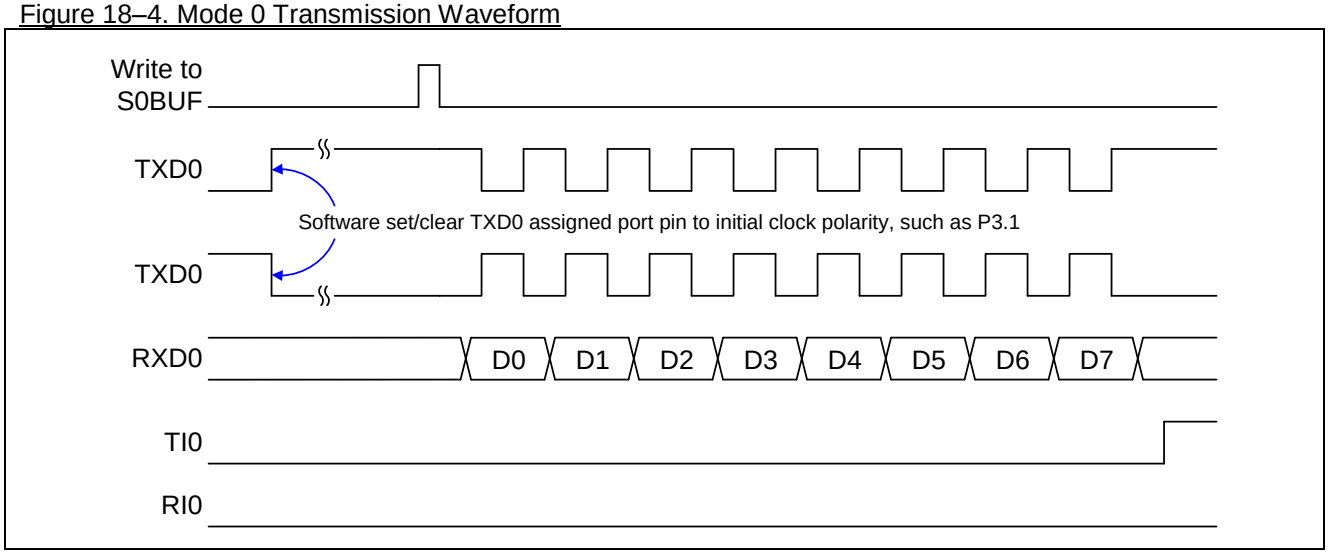

Figure 18–5. Mode 0 Reception Waveform

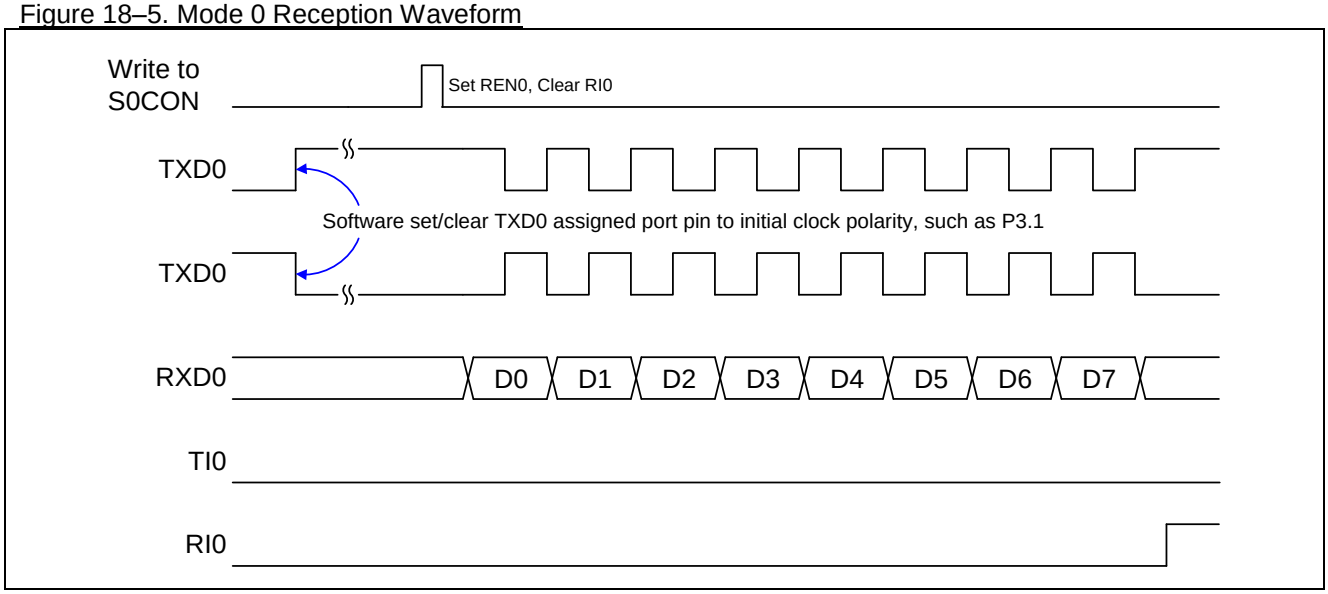

18.2. Serial Port 0 Mode 1

10 bits are transmitted through TXD0, or received through RXD0: a start bit (0), 8 data bits (LSB first), and a stop bit (1). On receive, the stop bit goes into RB80 in S0CON. The baud rate is determined by the Timer 1 or Timer 2 overflow rate. Figure 18–1 shows the data frame in Mode 1 and Figure 18–6 shows a simplified functional diagram of the serial port in Mode 1.

Transmission is initiated by any instruction that uses S0BUF as a destination register. The “write to S0BUF” signal requests the UART0 engine to start the transmission. After receiving a transmission request, the UART0 engine would start the transmission at the raising edge of TX Clock. The data in the S0BUF would be serial output on the TXD0 pin with the data frame as shown in Figure 18–1 and data width depend on TX Clock. After the end of 8th data transmission, TI0 would be asserted by hardware to indicate the end of data transmission and its interrupt vector can be switched to System Flag interrupt by BTI and UTIE gated.

Reception is initiated when Serial Port 0 Controller detected 1-to-0 transition at RXD0 sampled by RCK. The data on the RXD0 pin would be sampled by Bit Detector in Serial Port 0 Controller. After the end of STOP-bit reception, RI0 would be asserted by hardware to indicate the end of data reception and load STOP-bit into RB80 in S0CON register.

Figure 18–6. Serial Port Mode 1, 2, 3

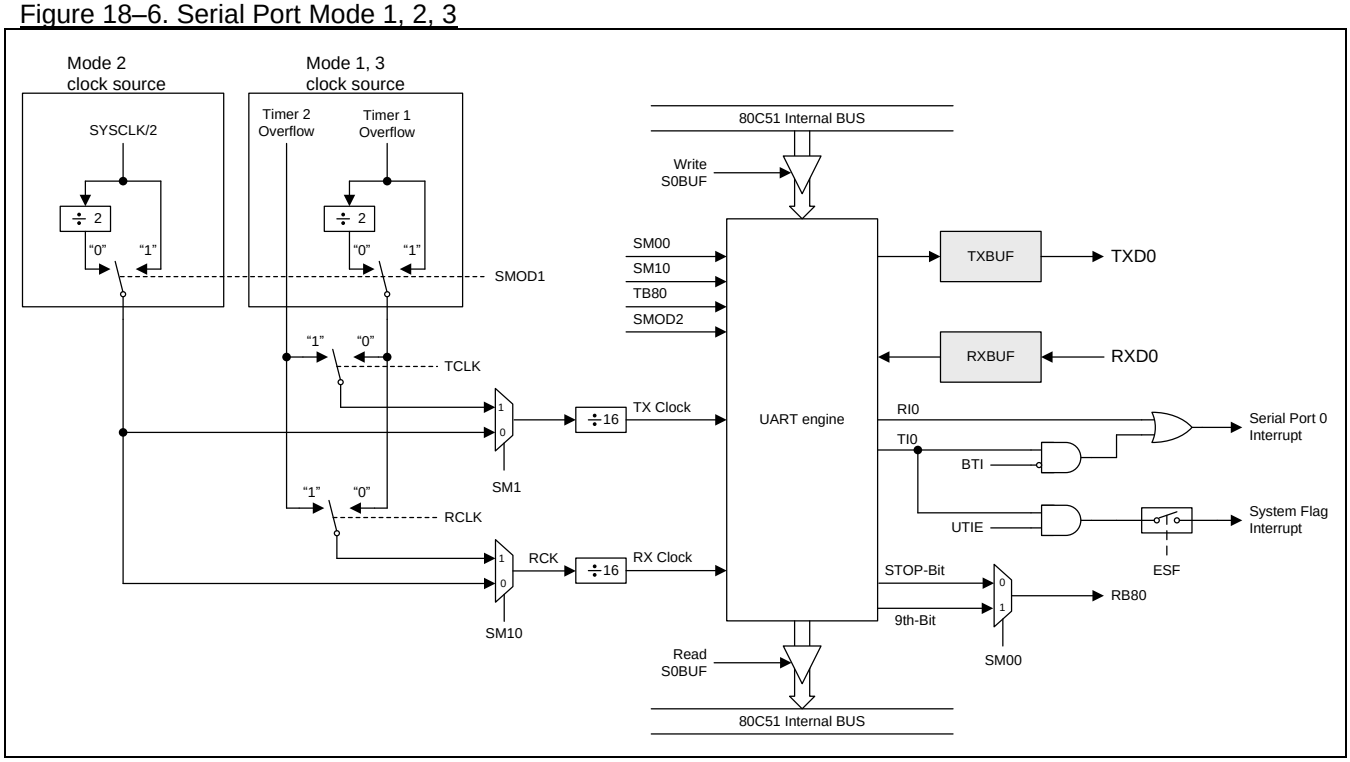

18.3. Serial Port 0 Mode 2 and Mode 3

11 bits are transmitted through TXD0, or received through RXD0: a start bit (0), 8 data bits (LSB first), a programmable 9th data bit, and a stop bit (1). On transmit, the 9th data bit (TB80) can be assigned the value of 0 or 1. On receive, the 9th data bit goes into RB80 in S0CON. The baud rate is programmable to select one of 1/16, 1/32 or 1/64 the system clock frequency in Mode 2. Mode 3 may have a variable baud rate generated from Timer 1 or Timer 2.

Figure 18–2 shows the data frame in Mode 2 and Mode 3. Figure 18–5 shows a functional diagram of the serial port in Mode 2 and Mode 3. The receive portion is exactly the same as in Mode 1. The transmit portion differs from Mode 1 only in the 9th bit of the transmit shift register.

The “write to S0BUF” signal requests the Serial Port 0 Controller to load TB80 into the 9th bit position of the transmit shit register and starts the transmission. After receiving a transmission request, the UART0 engine would start the transmission at the raising edge of TX Clock. The data in the S0BUF would be serial output on the TXD0 pin with the data frame as shown in Figure 18–2 and data width depend on TX Clock. After the end of 9th data transmission, TI0 would be asserted by hardware to indicate the end of data transmission and its interrupt vector can be switched to System Flag interrupt by BTI and UTIE gated.

Reception is initiated when the UART0 engine detected 1-to-0 transition at RXD0 sampled by RCK. The data on the RXD0 pin would be sampled by Bit Detector in UART0 engine. After the end of 9th data bit reception, RI0 would be asserted by hardware to indicate the end of data reception and load the 9th data bit into RB80 in S0CON register.

In all four modes, transmission is initiated by any instruction that use S0BUF as a destination register. Reception is initiated in mode 0 by the condition RI0 = 0 and REN0 = 1. Reception is initiated in the other modes by the incoming start bit with 1-to-0 transition if REN0=1.

18.4. Frame Error Detection

When used for framing error detection, the UART0 looks for missing stop bits in the communication. A missing stop bit will set the FE bit in the S0CON register. The FE bit shares the S0CON.7 bit with SM00 and the function of S0CON.7 is determined by SMOD0 bit (PCON.6). If SMOD0 is set then S0CON.7 functions as FE. S0CON.7 functions as SM00 when SMOD0 is cleared. When S0CON.7 functions as FE, it can only be cleared by firmware. Refer to Figure 18–7.

Figure 18–7. UART0 Frame Error Detection

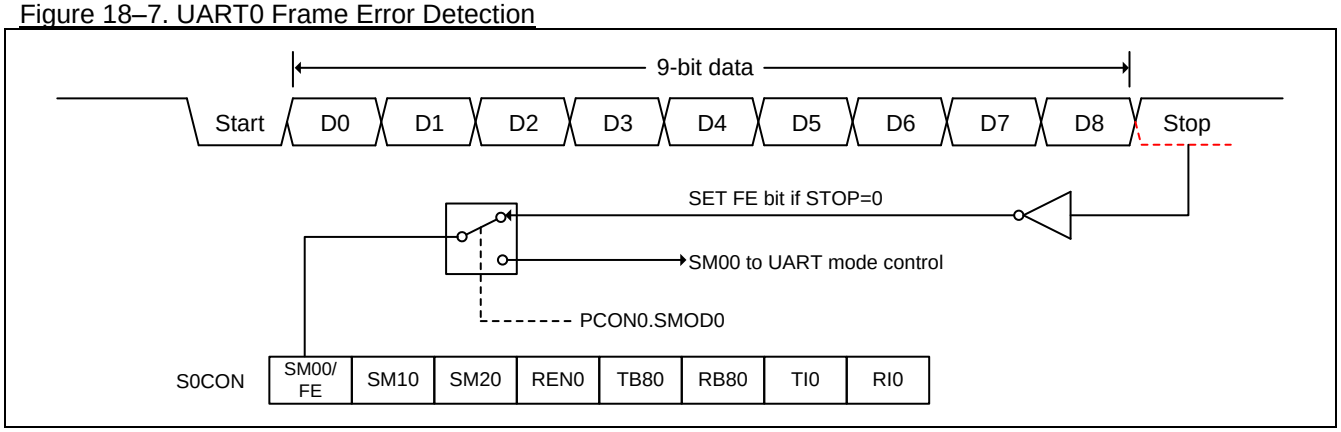

18.5. Multiprocessor Communications

Modes 2 and 3 have a special provision for multiprocessor communications as shown in Figure 18–8. In these two modes, 9 data bits are received. The 9th bit goes into RB80. Then comes a stop bit. The port can be programmed such that when the stop bit is received, the serial port interrupt will be activated only if RB80=1. This feature is enabled by setting bit SM20 (in S0CON register). A way to use this feature in multiprocessor systems is as follows:

When the master processor wants to transmit a block of data to one of several slaves, it first sends out an address byte which identifies the target slave. An address byte differs from a data byte in that the 9th bit is 1 in an address byte and 0 in a data byte. With SM20=1, no slave will be interrupted by a data byte. An address byte, however, will interrupt all slaves, so that each slave can examine the received byte and check if it is being addressed. The addressed slave will clear its SM20 bit and prepare to receive the data bytes that will be coming. The slaves that weren't being addressed leave their SM20 set and go on about their business, ignoring the coming data bytes.

SM20 has no effect in Mode 0, and in Mode 1 can be used to check the validity of the stop bit. In a Mode 1 reception, if SM20=1, the receive interrupt will not be activated unless a valid stop bit is received.

Figure 18–8. UART0 Multiprocessor Communications

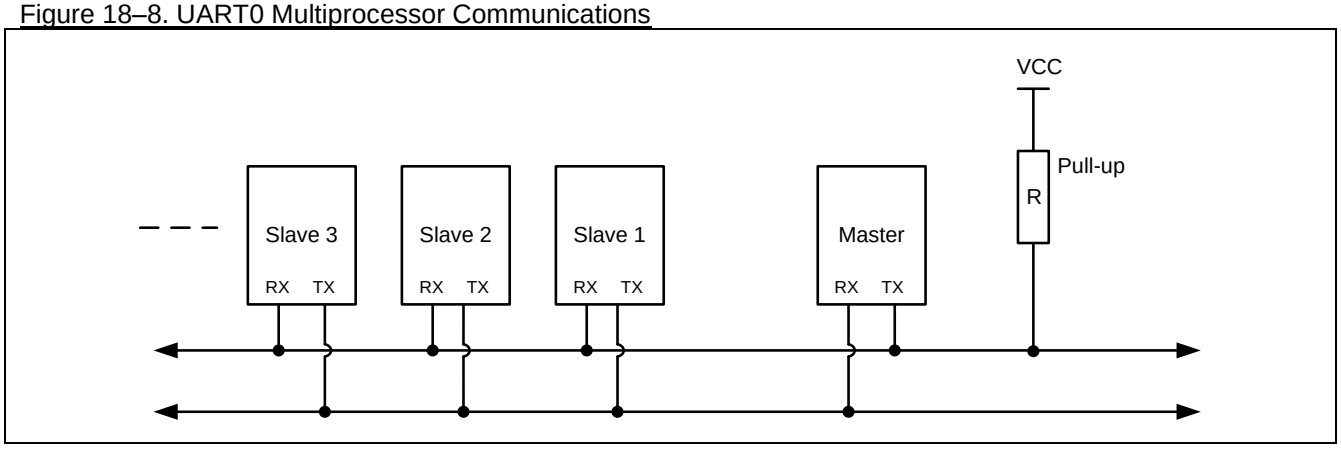

18.6. Automatic Address Recognition

Automatic Address Recognition is a feature which allows the UART0 to recognize certain addresses in the serial bit stream by using hardware to make the comparisons. This feature saves a great deal of firmware overhead by eliminating the need for the firmware to examine every serial address which passes by the serial port. This feature is enabled by setting the SM20 bit in S0CON.

In the 9 bit UART modes, mode 2 and mode 3, the Receive Interrupt flag (RI0) will be automatically set when the received byte contains either the "Given" address or the "Broadcast" address. The 9-bit mode requires that the 9th information bit is a 1 to indicate that the received information is an address and not data. Automatic address recognition is shown in Figure 18–9. The 8 bit mode is called Mode 1. In this mode the RI flag will be set if SM20 is enabled and the information received has a valid stop bit following the 8 address bits and the information is either a Given or Broadcast address. Mode 0 is the Shift Register mode and SM20 is ignored.

Using the Automatic Address Recognition feature allows a master to selectively communicate with one or more slaves by invoking the Given slave address or addresses. All of the slaves may be contacted by using the Broadcast address. Two special Function Registers are used to define the slave's address, SADDR, and the address mask, SADEN.

SADEN is used to define which bits in the SADDR are to be used and which bits are "don't care". The SADEN mask can be logically ANDed with the SADDR to create the "Given" address which the master will use for addressing each of the slaves. Use of the Given address allows multiple slaves to be recognized while excluding others.

The following examples will help to show the versatility of this scheme:

Slave 0	Slave 1
SADDR = 1100 0000	SADDR = 1100 0000
SADEN = 1111 1101	SADEN = 1111 1110
Given = 1100 00X0	Given = 1100 000X

In the above example SADDR is the same and the SADEN data is used to differentiate between the two slaves. Slave 0 requires a 0 in bit 0 and it ignores bit 1. Slave 1 requires a 0 in bit 1 and bit 0 is ignored. A unique address for Slave 0 would be 1100 0010 since slave 1 requires a 0 in bit 1. A unique address for slave 1 would be 1100 0001 since a 1 in bit 0 will exclude slave 0. Both slaves can be selected at the same time by an address which has bit 0 = 0 (for slave 0) and bit 1 = 0 (for slave 1). Thus, both could be addressed with 1100 0000.

In a more complex system the following could be used to select slaves 1 and 2 while excluding slave 0:

Slave 0	Slave 1	Slave 2
SADDR = 1100 0000	SADDR = 1110 0000	SADDR = 1110 0000
SADEN = 1111 1001	SADEN = 1111 1010	SADEN = 1111 1100
Given = 1100 0XX0	Given = 1110 0X0X	Given = 1110 00XX

In the above example the differentiation among the 3 slaves is in the lower 3 address bits. Slave 0 requires that bit 0 = 0 and it can be uniquely addressed by 1110 0110. Slave 1 requires that bit 1 = 0 and it can be uniquely addressed by 1110 0101. Slave 2 requires that bit 2 = 0 and its unique address is 1110 0011. To select Slaves 0 and 1 and exclude Slave 2 use address 1110 0100, since it is necessary to make bit 2 = 1 to exclude slave 2.

The Broadcast Address for each slave is created by taking the logical OR of SADDR and SADEN. Zeros in this result are treated as don't-cares. In most cases, interpreting the don't-cares as ones, the broadcast address will be FF hexadecimal.

Upon reset SADDR (SFR address 0xA9) and SADEN (SFR address 0xB9) are loaded with 0s. This produces a given address of all "don't cares" as well as a Broadcast address of all "don't cares". This effectively disables the Automatic Addressing mode and allows the micro-controller to use standard 80C51 type UART drivers which do not make use of this feature.

Figure 18–9. Auto-Address Recognition

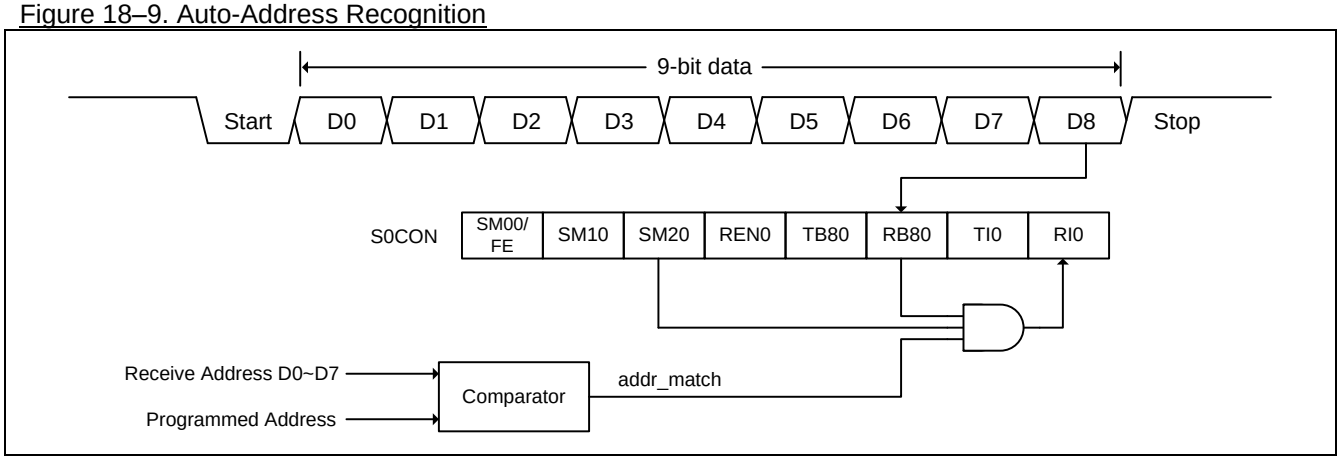

Note:

(1) After address matching(addr_match=1), Clear SM20 to receive data bytes

(2) After all data bytes have been received, Set SM20 to wait for next address.

18.7. Baud Rate Setting

Bits T2X12 (T2MOD.4), T1X12 (AUXR2.3), URM0X3 (S0CFG.5) and SMOD2 (S0CFG.6) provide a new option for the baud rate setting, as listed below.

18.7.1. Baud Rate in Mode 0

$$\text{Mode 0 Baud Rate} = \frac{F_{SYSCLK}}{n} \quad \begin{array}{l} ; \text{n=12, if URM0X3=0} \\ ; \text{n=4, if URM0X3=1} \end{array}$$

Note:

If URM0X6=0, the baud rate formula is as same as standard 8051.

18.7.2. Baud Rate in Mode 2

$$\text{Mode 2 Baud Rate} = \frac{2^{SMOD1} \times 2^{(SMOD2 \times 2)}}{64} \times F_{SYSCLK}$$

Note:

If SMOD2=0, the baud rate formula is as same as standard 8051. If SMOD2=1, there is an enhanced function for baud rate setting. Table 18–1 defines the Baud Rate setting with SMOD2 factor in Mode 2 baud rate generator.

Table 18–1. SMOD2 application criteria in Mode 2

SMOD2	SMOD1	Baud Rate	Note	Recommended Max. Receive Error (%)
0	0	Default Baud Rate	Standard function	± 3%
0	1	Double Baud Rate	Standard function	± 3%
1	0	Double Baud Rate **X2**	Enhanced function	± 2%
1	1	Double Baud Rate **X4**	Enhanced function	± 1%

18.7.3. Baud Rate in Mode 1 & 3

16.7.3.1 Using Timer 1 as the Baud Rate Generator

$$\text{Mode 1, 3 Baud Rate} = \frac{2^{SMOD1} \times 2^{(SMOD2 \times 2)}}{32} \times \frac{F_{SYSCLK}}{12 \times (256 - TH1)} \quad ; \text{T1X12=0}$$

$$\text{or} = \frac{2^{SMOD1} \times 2^{(SMOD2 \times 2)}}{32} \times \frac{F_{SYSCLK}}{1 \times (256 - TH1)} \quad ; \text{T1X12=1}$$

Note:

If SMOD2=0, T1X12=0, the baud rate formula is as same as standard 8051. If SMOD2=1, there is an enhanced function for baud rate setting. Table 18–2 defines the Baud Rate setting with SMOD2 factor in Timer 1 baud rate generator.

Table 18–2. SMOD2 application criteria in Mode 1 & 3 using Timer 1

SMOD2	SMOD1	Baud Rate	Note	Recommended Max. Receive Error (%)
0	0	Default Baud Rate	Standard function	± 3%
0	1	Double Baud Rate	Standard function	± 3%
1	0	Double Baud Rate **X2**	Enhanced function	± 2%
1	1	Double Baud Rate **X4**	Enhanced function	± 1%

Table 18–3 ~ Table 18–14 list various commonly used baud rates and how they can be obtained from Timer 1 in its 8-Bit Auto-Reload Mode.

Table 18–3. Timer 1 Generated Commonly Used Baud Rates @ F_{SYSCLK}=11.0592MHz

Baud Rate	**TH1**, the Reload Value					
	T1X12=0 & SMOD2=0			**T1X12=1 & SMOD2=0**		
	SMOD1=0	SMOD1=1	Error	SMOD1=0	SMOD1=1	Error
1200	232	208	0.0%	--	--	--
2400	244	232	0.0%	112	--	0.0%
4800	250	244	0.0%	184	112	0.0%
9600	253	250	0.0%	220	184	0.0%
14400	254	252	0.0%	232	208	0.0%
19200	--	253	0.0%	238	220	0.0%
28800	255	254	0.0%	244	232	0.0%
38400	--	--	--	247	238	0.0%
57600	--	255	0.0%	250	244	0.0%
115200	--	--	--	253	250	0.0%
230400	--	--	--	--	253	0.0%

Table 18–4. Timer 1 Generated High Baud Rates @ F_{SYSCLK} =11.0592MHz

Baud Rate	**TH1**, the Reload Value					
	T1X12=0 & SMOD2=1			**T1X12=1 & SMOD2=1**		
	SMOD1=0	SMOD1=1	Error	SMOD=0	SMOD=1	Error
230.4K	--	255	0.0%	250	244	0.0%
460.8K	--	--	--	253	250	0.0%
691.2K	--	--	--	254	252	0.0%
921.6K	--	--	--	--	253	0.0%
1.3824M	--	--	--	255	254	0.0%
2.7648M	--	--	--	--	255	0.0%

Table 18–5. Timer 1 Generated Commonly Used Baud Rates @ F_{SYSCLK}=22.1184MHz

Baud Rate	**TH1**, the Reload Value					
	T1X12=0 & SMOD2=0			**T1X12=1 & SMOD2=0**		
	SMOD1=0	SMOD1=1	Error	SMOD1=0	SMOD1=1	Error
1200	208	160	0.0%	--	--	--
2400	232	208	0.0%	--	--	0.0%
4800	244	232	0.0%	112	--	0.0%
9600	250	244	0.0%	184	112	0.0%
14400	252	248	0.0%	208	160	0.0%
19200	253	250	0.0%	220	184	0.0%
28800	254	252	0.0%	232	208	0.0%
38400	--	253	0.0%	238	220	0.0%
57600	255	254	0.0%	244	232	0.0%
115200	--	255	0.0%	250	244	0.0%
230400	--	--	--	253	250	0.0%
460800	--	--	--	--	253	0.0%

Table 18–6. Timer 1 Generated High Baud Rates @ F_{SYSCLK}=22.1184MHz

Baud Rate	**TH1**, the Reload Value					
	T1X12=0 & SMOD2=1			**T1X12=1 & SMOD2=1**		
	SMOD1=0	SMOD1=1	Error	SMOD=0	SMOD=1	Error
460.8K	--	255	0.0%	250	244	0.0%
691.2K	--	--	--	252	248	0.0%
921.6K	--	--	--	253	250	0.0%
1.3824M	--	--	--	254	252	0.0%
1.8432M				--	253	0.0%
2.7648M	--	--	--	255	254	0.0%
5.5296M	--	--	--	--	255	0.0%

Table 18–7. Timer 1 Generated Commonly Used Baud Rates @ F_{SYSCLK}=12.0MHz

Baud Rate	**TH1**, the Reload Value					
	T1X12=0 & SMOD2=0			**T1X12=1 & SMOD2=0**		
	SMOD=0	SMOD=1	Error	SMOD=0	SMOD=1	Error
1200	230	204	0.16%	--	--	--
2400	243	230	0.16%	100	--	0.16%
4800	--	243	0.16%	178	100	0.16%
9600	--	--	--	217	178	0.16%
14400	--	--	--	230	204	0.16%
19200	--	--	--	--	217	0.16%
28800	--	--	--	243	230	0.16%
38400	--	--	--	246	236	2.34%
57600	--	--	--	--	243	0.16%
115200	--	--	--	--	--	--

Table 18–8. Timer 1 Generated High Baud Rates @ F_{SYSCLK}=12.0MHz

Baud Rate	**TH1**, the Reload Value					
	T1X12=0 & SMOD2=1			**T1X12=1 & SMOD2=1**		
	SMOD1=0	SMOD1=1	Error	SMOD=0	SMOD=1	Error
115.2K	--	--	--	243	230	0.16%
230.4K	--	--	--	--	243	0.16%
460.8K	--	--	--	--	--	--

Table 18–9. Timer 1 Generated Commonly Used Baud Rates @ F_{SYSCLK}=24.0MHz

Baud Rate	**TH1**, the Reload Value					
	T1X12=0 & SMOD2=0			**T1X12=1 & SMOD2=0**		
	SMOD=0	SMOD=1	Error	SMOD=0	SMOD=1	Error
1200	204	152	0.16%	--	--	--
2400	230	204	0.16%	--	--	--
4800	243	230	0.16%	100	--	0.16%
9600	--	243	0.16%	178	100	0.16%
14400	--	--	--	204	152	0.16%

19200	--	--	--	217	178	0.16%
28800	--	--	--	230	204	0.16%
38400	--	--	--	--	217	0.16%
57600	--	--	--	243	230	0.16%
115200	--	--	--	--	243	0.16%

Table 18–10. Timer 1 Generated High Baud Rates @ F_{SYSCLK}=24.0MHz

Baud Rate	**TH1**, the Reload Value					
	T1X12=0 & SMOD2=1			**T1X12=1 & SMOD2=1**		
	SMOD1=0	SMOD1=1	Error	SMOD=0	SMOD=1	Error
230.4K	--	--	--	243	230	0.16%
460.8K	--	--	--	--	243	0.16%
691.2K	--	--	--	--	--	--
921.6K	--	--	--	--	--	--

Table 18–11. Timer 1 Generated Commonly Used Baud Rates @ F_{SYSCLK}=29.4912MHz

Table 18–12. Timer 1 Generated Commonly Used Baud Rates @ F_{SYSCLK}=44.2368MHz

Table 18–13. Timer 1 Generated Commonly Used Baud Rates @ F_{SYSCLK}=32MHz

Table 18–14. Timer 1 Generated Commonly Used Baud Rates @ F_{SYSCLK}=48.0MHz

16.7.3.2 Using Timer 2 as the Baud Rate Generator

When Timer 2 is used as the baud rate generator (either TCLK or RCLK in T2CON is '1'), the baud rate is as follows.

$$\text{Mode 1, 3 Baud Rate} = \frac{2^{\text{SMOD2 X (SMOD1 + 1)}} \times F_{SYSCLK}}{32 \times (65536 - (RCAP2H, RCAP2L))} \quad ; \text{T2X12=0}$$

$$\text{or} = \frac{2^{\text{SMOD2 X (SMOD1 + 1)}} \times F_{SYSCLK}}{16 \times (65536 - (RCAP2H, RCAP2L))} \quad ; \text{T2X12=1}$$

Note:

If SMOD2=0, the baud rate formula is as same as standard 8051. If SMOD2=1, there is an enhanced function for baud rate setting. Table 18–15 defines the Baud Rate setting with SMOD2 factor in Timer 2 baud rate generator.

Table 18–15. SMOD2 application criteria in Mode 1 & 3 using Timer 2

SMOD2	SMOD1	Baud Rate	Note	Recommended Max. Receive Error (%)
0	X	Default Baud Rate	Standard function	± 3%
1	0	Double Baud Rate	Enhanced function	± 3%
1	1	Double Baud Rate **X2**	Enhanced function	± 2%

Table 18–16 ~ Table 18–27 list various commonly used baud rates and how they can be obtained from Timer 2 in its Baud-Rate Generator Mode.

Table 18–16. Timer 2 Generated Commonly Used Baud Rates @ F_{SYSCLK}=11.0592MHz

Baud Rate	**[RCAP2H, RCAP2L]**, the Reload Value					
	T2X12=0 & SMOD2=0			**T2X12=1 & SMOD2=0**		
	SMOD1=0	SMOD1=1	Error	SMOD1=0	SMOD1=1	Error
1200	65248	65248	0.0%	64960	64960	0.0%
2400	65392	65392	0.0%	65248	65248	0.0%
4800	65464	65464	0.0%	65392	65392	0.0%
9600	65500	65500	0.0%	65464	65464	0.0%
14400	65512	65512	0.0%	65488	65488	0.0%
19200	65518	65518	0.0%	65500	65500	0.0%
28800	65524	65524	0.0%	65512	65512	0.0%
38400	65527	65527	0.0%	65518	65518	0.0%
57600	65530	65530	0.0%	65524	65524	0.0%
115200	65533	65533	0.0%	65530	65530	0.0%
230400	--	--	--	65533	65533	0.0%

Table 18–17. Timer 2 Generated High Baud Rates @ F_{SYSCLK}=11.0592MHz

Baud Rate	**[RCAP2H, RCAP2L]**, the Reload Value					
	T2X12=0 & SMOD2=1			**T2X12=1 & SMOD2=1**		
	SMOD1=0	SMOD1=1	Error	SMOD=0	SMOD=1	Error
230.4K	65533	65530	0.0%	65530	65524	0.0%
460.8K	--	65533	0.0%	65533	65530	0.0%
691.2K	65535	65534	0.0%	65534	65532	0.0%
921.6K	--	--	--	--	65533	0.0%

1.3824M	--	65535	0.0%	65535	65534	0.0%
2.7648M	--	--	--	--	65535	0.0%

Table 18–18. Timer 2 Generated Commonly Used Baud Rates @ F_{SYSCLK}=22.1184MHz

Baud Rate	**[RCAP2H, RCAP2L]**, the Reload Value					
	T2X12=0 & SMOD2=0			**T2X12=1 & SMOD2=0**		
	SMOD1=0	SMOD1=1	Error	SMOD1=0	SMOD1=1	Error
1200	64960	64960	0.0%	64384	64384	0.0%
2400	65248	65248	0.0%	64960	64960	0.0%
4800	65392	65392	0.0%	65248	65248	0.0%
9600	65464	65464	0.0%	65392	65392	0.0%
14400	65488	65488	0.0%	65440	65440	0.0%
19200	65500	65500	0.0%	65464	65464	0.0%
28800	65512	65512	0.0%	65488	65488	0.0%
38400	65518	65518	0.0%	65500	65500	0.0%
57600	65524	65524	0.0%	65512	65512	0.0%
115200	65530	65530	0.0%	65524	65524	0.0%
230400	65533	65533	0.0%	65530	65530	0.0%
460800	--	--	--	65533	65533	0.0%

Table 18–19. Timer 2 Generated High Baud Rates @ F_{SYSCLK}=22.1184MHz

Baud Rate	**[RCAP2H, RCAP2L]**, the Reload Value					
	T2X12=0 & SMOD2=1			**T2X12=1 & SMOD2=1**		
	SMOD1=0	SMOD1=1	Error	SMOD=0	SMOD=1	Error
460.8K	65533	65530	0.0%	65530	65524	0.0%
691.2K	65534	65532	0.0%	65532	65528	0.0%
921.6K	--	65533	0.0%	65533	65530	0.0%
1.3824M	65535	65534	0.0%	65534	65532	0.0%
1.8432M	--	--	--	--	65533	0.0%
2.7648M	--	65535	0.0%	65535	65534	0.0%
5.5296M	--	--	--	--	65535	0.0%

Table 18–20. Timer 2 Generated Commonly Used Baud Rates @ F_{SYSCLK}=12.0MHz

Baud Rate	**[RCAP2H, RCAP2L]**, the Reload Value					
	T2X12=0 & SMOD2=0			**T2X12=1 & SMOD2=0**		
	SMOD=0	SMOD=1	Error	SMOD=0	SMOD=1	Error
1200	65224	65224	0.16%	64912	64912	0.16%
2400	65380	65380	0.16%	65224	65224	0.16%
4800	65458	65458	0.16%	65380	65380	0.16%
9600	65497	65497	0.16%	65458	65458	0.16%
14400	65510	65510	0.16%	65484	65484	0.16%
19200	65516	65516	2.34%	65497	65497	0.16%
28800	65523	65523	0.16%	65510	65510	0.16%
38400	--	--	--	65516	65516	2.34%
57600	--	--	--	65523	65523	0.16%
115200	--	--	--	--	--	--

Table 18–21. Timer 2 Generated High Baud Rates @ F_{SYSCLK}=12.0MHz

Baud Rate	**[RCAP2H, RCAP2L]**, the Reload Value					
	T2X12=0 & SMOD2=1			**T2X12=1 & SMOD2=1**		
	SMOD1=0	SMOD1=1	Error	SMOD=0	SMOD=1	Error
115.2K	--	65523	0.16%	65523	65510	0.16%
230.4K	--	--	--	--	65523	0.16%
460.8K	--	--	--	--	--	--

Table 18–22. Timer 2 Generated Commonly Used Baud Rates @ F_{SYSCLK}=24.0MHz

Baud Rate	**[RCAP2H, RCAP2L]**, the Reload Value					
	T2X12=0 & SMOD2=0			**T2X12=1 & SMOD2=0**		
	SMOD=0	SMOD=1	Error	SMOD=0	SMOD=1	Error
1200	64912	64912	0.16%	64288	64288	0.16%
2400	65224	65224	0.16%	64912	64912	0.16%
4800	65380	65380	0.16%	65224	65224	0.16%
9600	65458	65458	0.16%	65380	65380	0.16%
14400	65484	65484	0.16%	65432	65432	0.16%
19200	65497	65497	0.16%	65458	65458	0.16%
28800	65510	65510	0.16%	65484	65484	0.16%
38400	65516	65516	2.34%	65497	65497	0.16%
57600	65523	65523	0.16%	65510	65510	0.16%
115200	--	--	--	65523	65523	0.16%

Table 18–23. Timer 2 Generated High Baud Rates @ F_{SYSCLK}=24.0MHz

Baud Rate	**[RCAP2H, RCAP2L]**, the Reload Value					
	T2X12=0 & SMOD2=1			**T2X12=1 & SMOD2=1**		
	SMOD1=0	SMOD1=1	Error	SMOD=0	SMOD=1	Error
230.4K	--	65523	0.16%	65523	65510	0.16%
460.8K	--	--	--	--	65523	0.16%
691.2K	--	--	--	--	--	--
921.6K	--	--	--	--	--	--

Table 18–24. Timer 2 Generated Commonly Used Baud Rates @ F_{SYSCLK}=29.4912MHz

Table 18–25. Timer 2 Generated Commonly Used Baud Rates @ F_{SYSCLK}=44.2368MHz

Table 18–26. Timer 2 Generated Commonly Used Baud Rates @ F_{SYSCLK}=32MHz

Table 18–27. Timer 2 Generated Commonly Used Baud Rates @ F_{SYSCLK}=48.0MHz

16.7.3.3 Using S1 Baud Rate Timer as the Baud Rate Generator

The secondary UART (S1) in **MG82FG5C64** has an independent baud-rate generator. S0 can set URTS (S0CFG.7) to select the S1BRT as the timer source for UART Mode 1 and Mode 3. See Section "19.6 S1 Baud Rate Generator for S0" for the details on S0 baud rate select.

18.8. Serial Port 0 Mode 4 (SPI Master)

The Serial Port of **MG82FG5C64** is embedded an additional Mode 4 to support SPI master engine. The Mode 4 is selected by SM30, SM00 and SM10. Table 18–28 shows the serial port mode definition in **MG82FG5C64**.

Table 18–28. Serial Port 0 Mode Selection

SM30	SM00	SM10	Mode	Description	Baud Rate
0	0	0	0	shift register	SYSCLK/12 or SYSCLK/4
0	0	1	1	8-bit UART	variable
0	1	0	2	9-bit UART	SYSCLK/64, /32
0	1	1	3	9-bit UART	variable
1	0	0	4	**SPI Master**	SYSCLK/12 or SYSCLK/4
1	0	1	5	Reserved	Reserved
1	1	0	6	Reserved	Reserved
1	1	1	7	Reserved	Reserved

URM0X3 also controls the SPI transfer speed. If URM0X3 = 0, the SPI clock frequency is SYSCLK/12. If URM0X3 = 1, the SPI clock frequency is SYSCLK/4.

The SPI master in **MG82FG5C64** uses the TXD0 as SPICLK, RXD0 as MOSI, and S0MI as MISO. nSS is selected by MCU software on other port pin. Figure 18–10 shows the SPI connection. It also can support the configuration for multiple slaves communication in Figure 18–11.

Figure 18–10. Serial Port 0 Mode 4, Single Master and Single Slave configuration (n = 0)

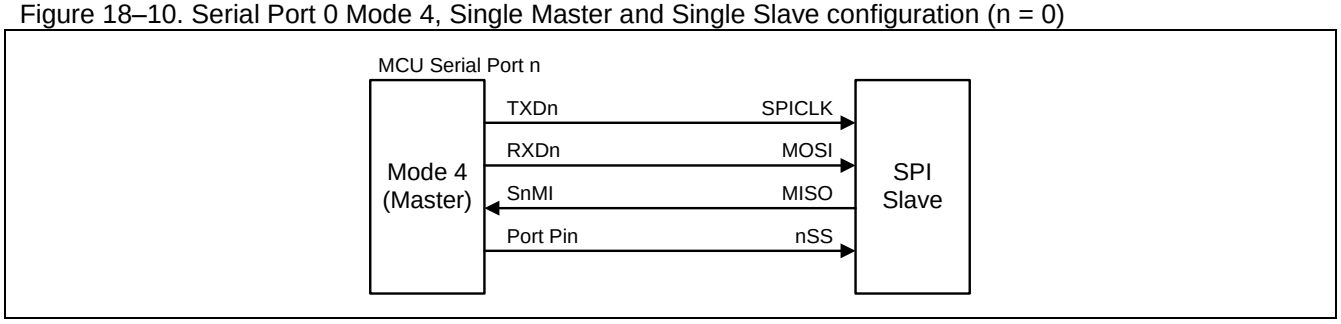

Figure 18–11. Serial Port 0 Mode 4, Single Master and Multiple Slaves configuration (n = 0)

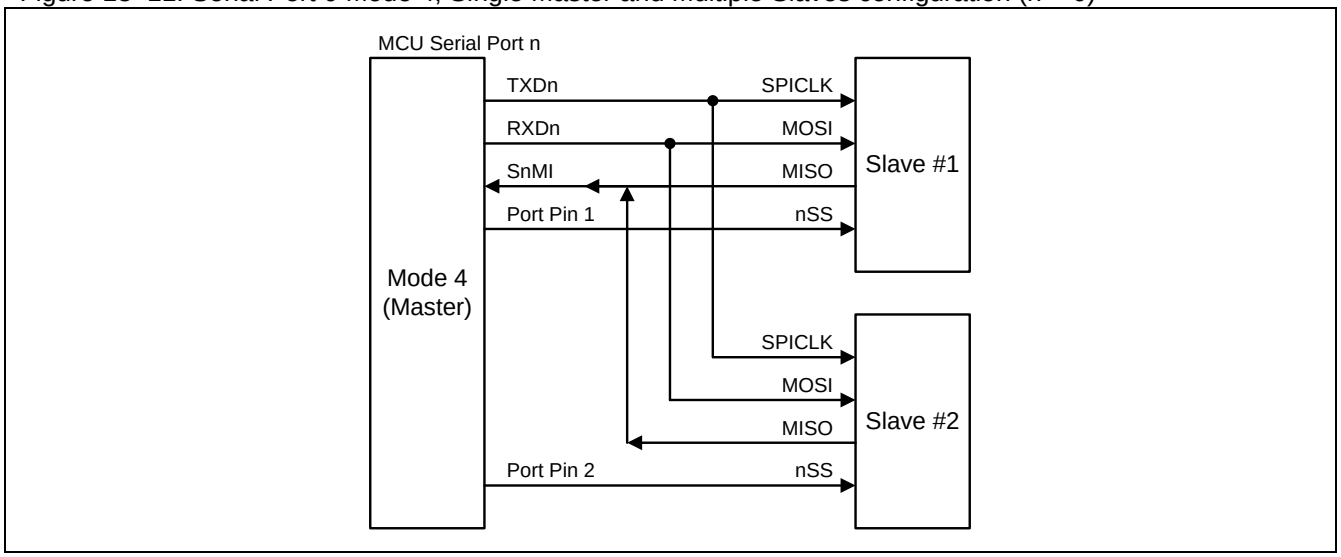

The SPI master satisfies the transfer with the full function SPI module of Megawin MG82/84 series MCU with CPOL, CPHA and DORD selection. For CPOL and CPHA condition, **MG82FG5C64** uses an easy way by initialize SPI clock assigned port pin (TXD0, P3.1/P4.5) polarity to fit them. Table 18–29 shows the serial port Mode 4 mapping with the four SPI operating mode.

Table 18–29. SPI mode mapping with Serial Port Mode 4 configuration

SPI Mode	CPOL	CPHA	Configuration in **MG82FG5C64** when TXD0 on P3.1
0	0	0	Clear P3.1 to “0”
1	0	1	Clear P3.1 to “0”
2	1	0	Set P3.1 to “1”
3	1	1	Set P3.1 to “1”

For bit order control (DORD) on SPI serial transfer, **MG82FG5C64** provides a SFR, BOREV, to reverse the bit order by software program. After MCU writing a MSB first data format to BOREV, MCU will get the LSB first data by reading BOREV back. The SPI master engine in serial port 0 Mode 4 is the LSB first transferred which is same as serial port 0 Mode 0. To support SPI MSB first shift, MCU must use the BOREV write/read operation to reverse the data bit order for SPI IN/OUT transmission. Figure 18–12 shows the BOREV configuration.

Figure 18–12. SFR BOREV read/write configuration

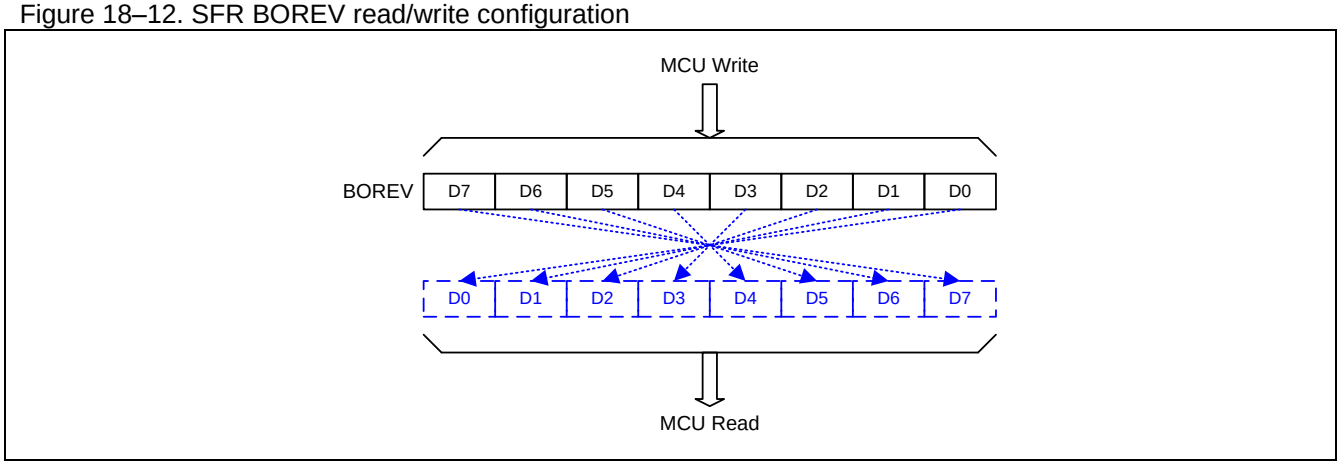

Transmission is initiated by any instruction that uses S0BUF as a destination register. The “write to S0BUF” signal triggers the UART engine to start the transmission. The data in the S0BUF would be shifted into the RXD0 pin as MOSI serial data. The SPI shift clock is built on the TXD0 pin for SPICLK output. After eight raising edge of shift clocks passing, TI0 would be asserted by hardware to indicate the end of transmission. And the contents on the S0MI pin would be sampled and shifted into shift register. Then, “read S0BUF” can get the SPI shift-in data. Figure 18–13 shows the transmission waveform in Mode 0. RI0 will not be asserted in Mode 4.

Figure 18–13. Serial Port 0 Mode 4 transmission waveform (n = 0)

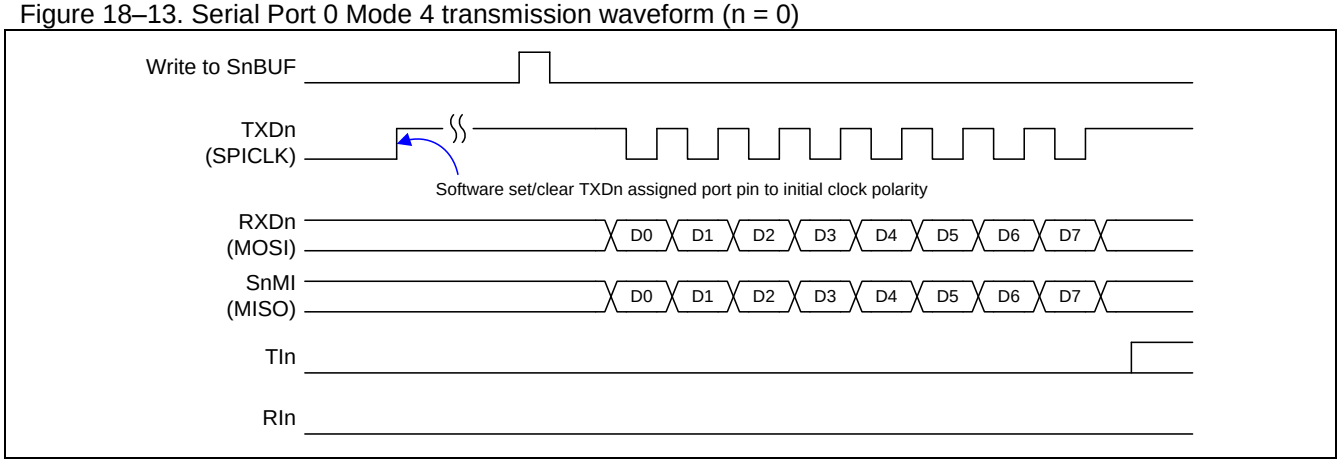

18.9. Serial Port 0 Register

All the four operation modes of the serial port are the same as those of the standard 8051 except the baud rate setting. Three registers, PCON, AUXR2 and S0CFG, are related to the baud rate setting:

S0CON: Serial port 0 Control Register
SFR Page = **0 only**
SFR Address = 0x98 RESET = 0000-0000

7	6	5	4	3	2	1	0
SM00/FE	SM10	SM20	REN0	TB80	RB80	TI0	RI0
R/W	**R/W**	**R/W**	**R/W**	**R/W**	**R/W**	**R/W**	**R/W**

Bit 7: FE, Framing Error bit. The SMOD0 bit must be set to enable access to the FE bit.
0: The FE bit is not cleared by valid frames but should be cleared by software.
1: This bit is set by the receiver when an invalid stop bit is detected.

Bit 7: Serial port 0 mode bit 0, (SMOD0 must = 0 to access bit SM00)
Bit 6: Serial port 0 mode bit 1.

SM30	SM00	SM10	Mode	Description	Baud Rate
0	0	0	0	shift register	SYSCLK/12 or SYSCLK/4
0	0	1	1	8-bit UART	variable
0	1	0	2	9-bit UART	SYSCLK/64, /32, /16 or /8
0	1	1	3	9-bit UART	variable
1	0	0	4	SPI Master	SYSCLK/12 or SYSCLK/4
1	0	1	5	Reserved	Reserved
1	1	0	6	Reserved	Reserved
1	1	1	7	Reserved	Reserved

Bit 5: Serial port 0 mode bit 2.
0: Disable SM20 function.
1: Enable the automatic address recognition feature in Modes 2 and 3. If SM20=1, RI0 will not be set unless the received 9th data bit is 1, indicating an address, and the received byte is a Given or Broadcast address. In mode1, if SM20=1 then RI0 will not be set unless a valid stop Bit was received, and the received byte is a Given or Broadcast address. In Mode 0, SM20 should be 0.

Bit 4: REN0, Enable serial reception.
0: Clear by software to disable reception.
1: Set by software to enable reception.

Bit 3: TB80, The 9th data bit that will be transmitted in Modes 2 and 3. Set or clear by software as desired.

Bit 2: RB80, In Modes 2 and 3, the 9th data bit that was received. In Mode 1, if SM20 = 0, RB80 is the stop bit that was received. In Mode 0, RB80 is not used.

Bit 1: TI0. Transmit interrupt flag.
0: Must be cleared by software.
1: Set by hardware at the end of the 8th bit time in Mode 0, or at the beginning of the stop bit in the other modes, in any serial transmission.

Bit 0: RI0. Receive interrupt flag.
0: Must be cleared by software.
1: Set by hardware at the end of the 8th bit time in Mode 0, or halfway through the stop bit time in the other modes, in any serial reception (except see SM20).

S0BUF: Serial port 0 Buffer Register

SFR Page = **0 only**

SFR Address = 0x99 RESET = XXXX-XXXX

7	6	5	4	3	2	1	0
S0BUF.7	S0BUF.6	S0BUF.5	S0BUF.4	S0BUF.3	S0BUF.2	S0BUF.1	S0BUF.0
R/W	**R/W**	**R/W**	**R/W**	**R/W**	**R/W**	**R/W**	**R/W**

Bit 7~0: It is used as the buffer register in transmission and reception.

SADDR: Slave Address Register

SFR Page = 0~F

SFR Address = 0xA9 RESET = 0000-0000

7	6	5	4	3	2	1	0
SADDR.7	SADDR.6	SADDR.5	SADDR.4	SADDR.3	SADDR.2	SADDR.1	SADDR.0
R/W	**R/W**	**R/W**	**R/W**	**R/W**	**R/W**	**R/W**	**R/W**

SADEN: Slave Address Mask Register

SFR Page = 0~F

SFR Address = 0xB9 RESET = 0000-0000

7	6	5	4	3	2	1	0
SADEN.7	SADEN.6	SADEN.5	SADEN.4	SADEN.3	SADEN.2	SADEN.1	SADEN.0
R/W	**R/W**	**R/W**	**R/W**	**R/W**	**R/W**	**R/W**	**R/W**

SADDR register is combined with SADEN register to form Given/Broadcast Address for automatic address recognition. In fact, SADEN functions as the “mask” register for SADDR register. The following is the example for it.

SADDR = 1100 0000
SADEN = 1111 1101
Given = 1100 00x0 The Given slave address will be checked except bit 1 is treated as “don’t care”

The Broadcast Address for each slave is created by taking the logical OR of SADDR and SADEN. Zero in this result is considered as “don’t care”. Upon reset, SADDR and SADEN are loaded with all 0s. This produces a Given Address of all “don’t care” and a Broadcast Address of all “don’t care”. This disables the automatic address detection feature.

PCON0: Power Control Register 0

SFR Page = 0~F

SFR Address = 0x87 POR = 0001-0000, RESET = 0000-0000

7	6	5	4	3	2	1	0
SMOD1	SMOD0	GF	POF	GF1	GF0	PD	IDL
R/W	**R/W**	**R/W**	**R/W**	**R/W**	**R/W**	**R/W**	**R/W**

Bit 7: SMOD1, double Baud rate control bit.
0: Disable double Baud rate of the UART.
1: Enable double Baud rate of the UART in mode 1, 2, or 3.

Bit 6: SMOD0, Frame Error select.
0: S0CON.7 is SM0 function.
1: S0CON.7 is FE function. Note that FE will be set after a frame error regardless of the state of SMOD0.

S0CFG: Serial Port 0 Configuration Register

SFR Page = **0 only**

SFR Address = 0x9C RESET = 0000-100x

7	6	5	4	3	2	1	0
URTS	SMOD2	URM0X3	SM30	S0DOR	BTI	UTIE	--
R/W	**R/W**	**R/W**	**R/W**	**R/W**	**R/W**	**R/W**	**W**

Bit 7: URTS, UART0 Timer Selection.
0: Timer 1 or Timer 2 can be used as the Baud Rate Generator in Mode 1 and Mode 3.
1: Timer 1 overflow signal is replaced by the UART1 Baud Rate Timer overflow signal when Timer 1 is selected as the Baud Rate Generator in Mode1 or Mode 3 of the UART0. (Refer Section "18.7.3 Baud Rate in Mode 1 & 3".)

Bit 6: SMOD2, UART0 extra double baud rate selector.
0: Disable extra double baud rate for UART0.
1: Enable extra double baud rate for UART0.

Bit 5: URM0X3, Serial Port mode 0 and mode 4 baud rate selector.
0: Clear to select SYSCLK/12 as the baud rate for UART Mode 0 and Mode 4.
1: Set to select SYSCLK/4 as the baud rate for UART Mode 0 and Mode 4.

Bit 4: SM30, Serial Port Mode control bit 3.
0: Disable Serial Port Mode 4.
1: Enable SM30 to control Serial Port Mode 4, SPI Master. Refer S0CON description for more S0 mode selecting information.

Bit 3: S0DOR, Serial Port 0 data order control in all operating modes.
0: The MSB of the data byte is transmitted first.
1: The LSB of the data byte is transmitted first. S0DOR is set to "1" in default.

Bit 2: BTI, Block TI0 in Serial Port 0 Interrupt.
0: Retain the TI0 to be a source of Serial Port 0 Interrupt.
1: Block TI0 to be a source of Serial Port 0 Interrupt.

Bit 1: UTIE, S0 TI0 Enabled in system flag interrupt.
0: Disable the interrupt vector sharing for TI0 in system flag interrupt.
1: Set TI0 flag will share the interrupt vector with system flag interrupt.

Bit 0: Reserved. Software must write "0" on this bit when S0CFG is written.

AUXR2: Auxiliary Register 2

SFR Page = 0~F

SFR Address = 0xA3 RESET = 0000-0000

7	6	5	4	3	2	1	0
ALEINV	ADDRO	--	--	**T1X12**	T0X12	T1CKOE	T0CKOE
R/W	**R/W**	**W**	**W**	**R/W**	**R/W**	**R/W**	**R/W**

Bit 3: T1X12, Timer 1 clock source selector while C/T=0.
0: Clear to select SYSCLK/12.
1: Set to select SYSCLK as the clock source. If set, the UART0 baud rate by Timer 1 in Mode 1 and Mode 3 is 12 times than standard 8051 function.

19. Serial Port 1 (UART1)

The **MG82FG5C64** is equipped with a secondary UART (hereafter, called UART1), which has **5** operation modes, Mode 0 ~ Mode 4, the same as the first UART (UART0) except the following differences:

(1) The UART1 has no enhanced functions: Framing Error Detection and Auto Address Recognition.
(2) The UART1 use the dedicated Baud Rate Timer as its Baud Rate Generator (S1BRG).
(3) The UART1 uses TXD1 and RXD1 for transmit and receive, respectively.
(4) The Baud Rate Generator provides the toggle source for S1CKO and peripheral clock.
(5) S1 + S1BRG can be configured to an 8-bit auto-reload timer with port change detection.
(6) In mode 0 and mode 4, S1TX12 of UART1 is the same function as URM0X3 in UART0.
(7) Extra mode 5 to support LIN bus and mode 7 to support SMC interface.

The UART1 and UART0 in **MG82FG5C64** can operate simultaneously in identical or different modes and communication speeds.

19.1. Serial Port 1 Baud Rate Generator (S1BRG)

The **MG82FG5C64** has an embedded Baud Rate Generator to generate the UART clock for serial port 1 operation in mode 1 and mode 3. It is constructed by an 8-bit up-counter, S1BRC, and an 8-bit reload register, S1BRT. The overflow (S1TOF) of S1BRC is the time base of UART1 serial engine in mode 1 and mode 3 and triggers the S1BRT content reloaded into S1BRC for the consecutive counting.

If S1TR = 0, software writing S1BRT will modify S1BRC simultaneously. After S1TR enabled to start the S1BRC counting, it is no influence on S1BRC when S1BRT is writing. Modifying S1BRC is always independent with S1BRT content.

This baud rate generator can also provide the time base for serial port 0 by software configured. There is an addition clock output, S1CKO, from the S1BRC overflow rate by 2 (S1TOF/2). S1TOF also supplies the toggle source for UART0, PCA, SPI, TWSI, TWI1 and ADC clock input. Regardless S1 engine is running or pending, S1BRG always serves the time base function for these peripherals.

The configuration of the Serial Port 1 Baud Rate Generator is shown in Figure 19–1.

Figure 19–1. S1BRG configuration (S1TME=0)

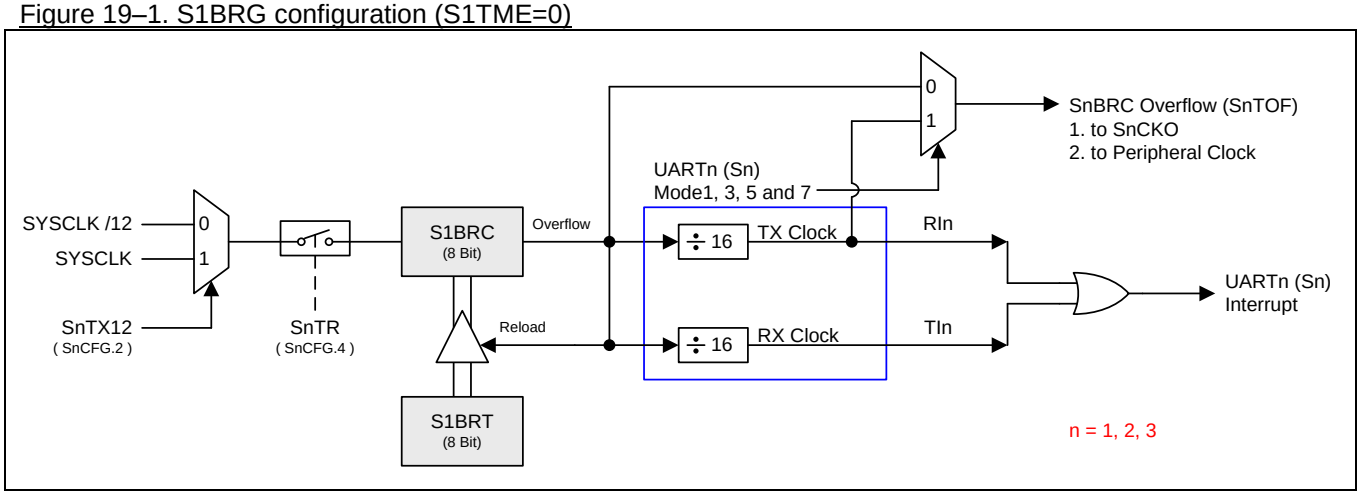

19.2. Serial Port 1 Baud Rate Setting

19.2.1. Baud Rate in Mode 0

$$\text{S1 Mode 0 Baud Rate} = \frac{F_{SYSCLK}}{n}$$; n=12, if S1TX12=0 ; n=4, if S1TX12=1

19.2.2. Baud Rate in Mode 2

$$\text{S1 Mode 2 Baud Rate} = \frac{2^{S1MOD1}}{64} \times F_{SYSCLK}$$

19.2.3. Baud Rate in Mode 1 & 3

$$\text{S1 Mode 1, 3 Baud Rate} = \frac{2^{S1MOD1}}{32} \times \frac{F_{SYSCLK}}{12 \times (256 - S1BRT)}$$; S1TX12=0

$$\text{or} = \frac{2^{S1MOD1}}{32} \times \frac{F_{SYSCLK}}{1 \times (256 - S1BRT)}$$; S1TX12=1

Table 19–1 ~ Table 19–4 list various commonly used baud rates and how they can be obtained from S1BRG, serial port 1 baud rate generator.

Table 19–1. S1BRG Generated Commonly Used Baud Rates @ F_{SYSCLK}=11.0592MHz

Baud Rate	**S1BRT**, Reload Value of S1BRG					
	S1TX12=0			**S1TX12=1**		
	S1MOD1=0	S1MOD1=1	Error	S1MOD1=0	S1MOD1=1	Error
1200	232	208	0.0%	--	--	--
2400	244	232	0.0%	112	--	0.0%
4800	250	244	0.0%	184	112	0.0%
9600	253	250	0.0%	220	184	0.0%
14400	254	252	0.0%	232	208	0.0%
19200	--	253	0.0%	238	220	0.0%
28800	255	254	0.0%	244	232	0.0%
38400	--	--	--	247	238	0.0%
57600	--	255	0.0%	250	244	0.0%
115200	--	--	--	253	250	0.0%
230400	--	--	--	--	253	0.0%

Table 19–2. S1BRG Generated Commonly Used Baud Rates @ F_{SYSCLK}=22.1184MHz

Baud Rate	**S1BRT**, Reload Value of S1BRG					
	S1TX12=0			**S1TX12=1**		
	S1MOD1=0	S1MOD1=1	Error	S1MOD1=0	S1MOD1=1	Error
1200	208	160	0.0%	--	--	--
2400	232	208	0.0%	--	--	0.0%
4800	244	232	0.0%	112	--	0.0%
9600	250	244	0.0%	184	112	0.0%

14400	252	248	0.0%	208	160	0.0%
19200	253	250	0.0%	220	184	0.0%
28800	254	252	0.0%	232	208	0.0%
38400	--	253	0.0%	238	220	0.0%
57600	255	254	0.0%	244	232	0.0%
115200	--	255	0.0%	250	244	0.0%
230400	--	--	--	253	250	0.0%
460800	--	--	--	--	253	0.0%

Table 19–3. S1BRG Generated Commonly Used Baud Rates @ F_{SYSCLK}=12.0MHz

Baud Rate	**S1BRT**, Reload Value of S1BRG					
	S1TX12=0			**S1TX12=1**		
	S1MOD=0	S1MOD=1	Error	S1MOD=0	S1MOD=1	Error
1200	230	204	0.16%	--	--	--
2400	243	230	0.16%	100	--	0.16%
4800	--	243	0.16%	178	100	0.16%
9600	--	--	--	217	178	0.16%
14400	--	--	--	230	204	0.16%
19200	--	--	--	--	217	0.16%
28800	--	--	--	243	230	0.16%
38400	--	--	--	246	236	2.34%
57600	--	--	--	--	243	0.16%
115200	--	--	--	--	--	--

Table 19–4. S1BRG Generated Commonly Used Baud Rates @ F_{SYSCLK}=24.0MHz

Baud Rate	**S1BRT**, Reload Value of S1BRG					
	S1TX12=0			**S1TX12=1**		
	S1MOD=0	S1MOD=1	Error	S1MOD=0	S1MOD=1	Error
1200	204	152	0.16%	--	--	--
2400	230	204	0.16%	--	--	--
4800	243	230	0.16%	100	--	0.16%
9600	--	243	0.16%	178	100	0.16%
14400	--	--	--	204	152	0.16%
19200	--	--	--	217	178	0.16%
28800	--	--	--	230	204	0.16%
38400	--	--	--	--	217	0.16%
57600	--	--	--	243	230	0.16%
115200	--	--	--	--	243	0.16%

Table 19–5. S1BRG Generated Commonly Used Baud Rates @ F_{SYSCLK}=29.4912MHz

Table 19–6. S1BRG Generated Commonly Used Baud Rates @ F_{SYSCLK}=44.2368MHz

Table 19–7. S1BRG Generated Commonly Used Baud Rates @ F_{SYSCLK}=32.0MHz

Table 19–8. S1BRG Generated Commonly Used Baud Rates @ F_{SYSCLK}=48.0MHz

19.3. Serial Port 1 Mode 4 (SPI Master)

The Serial Port of **MG82FG5C64** is embedded Mode 4 to support SPI master engine. The Mode 4 is selected by SM31, SM01 and SM11. Table 19–9 shows the serial port mode definition in **MG82FG5C64**.

Table 19–9. Serial Port 1 Mode Selection

SM31	SM01	SM11	Mode	Description	Baud Rate
0	0	0	0	shift register	SYSCLK/12 or SYSCLK/4
0	0	1	1	8-bit UART	variable
0	1	0	2	9-bit UART	SYSCLK/64, /32
0	1	1	3	9-bit UART	variable
1	0	0	4	**SPI Master**	SYSCLK/12 or SYSCLK/4
1	0	1	5	LIN Bus	variable
1	1	0	6	Reserved	Reserved
1	1	1	7	SMC Interface	variable

S1TX12 also controls the SPI transfer speed. If **S1TX12** = 1, the SPI clock frequency is SYSCLK/4. Otherwise, the SPI clock frequency is SYSCLK/12.

The SPI master in **MG82FG5C64** uses the TXD1 as SPICLK, RXD1 as MOSI, and S1MI as MISO. nSS is selected by MCU software on other port pin. Figure 19–2 shows the SPI connection. It also can support the configuration for multiple slaves communication in Figure 19–3.

Figure 19–2. Serial Port 1 Mode 4, Single Master and Single Slave configuration (n = 1)

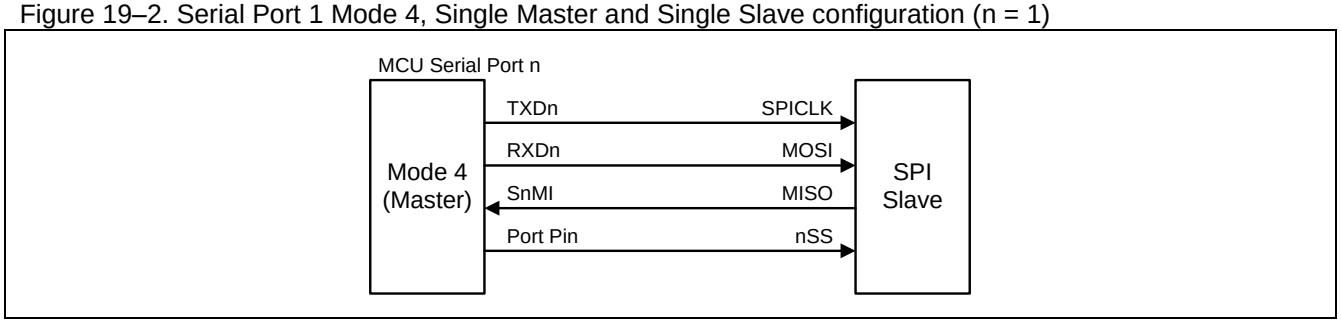

Figure 19–3. Serial Port 1 Mode 4, Single Master and Multiple Slaves configuration (n = 1)

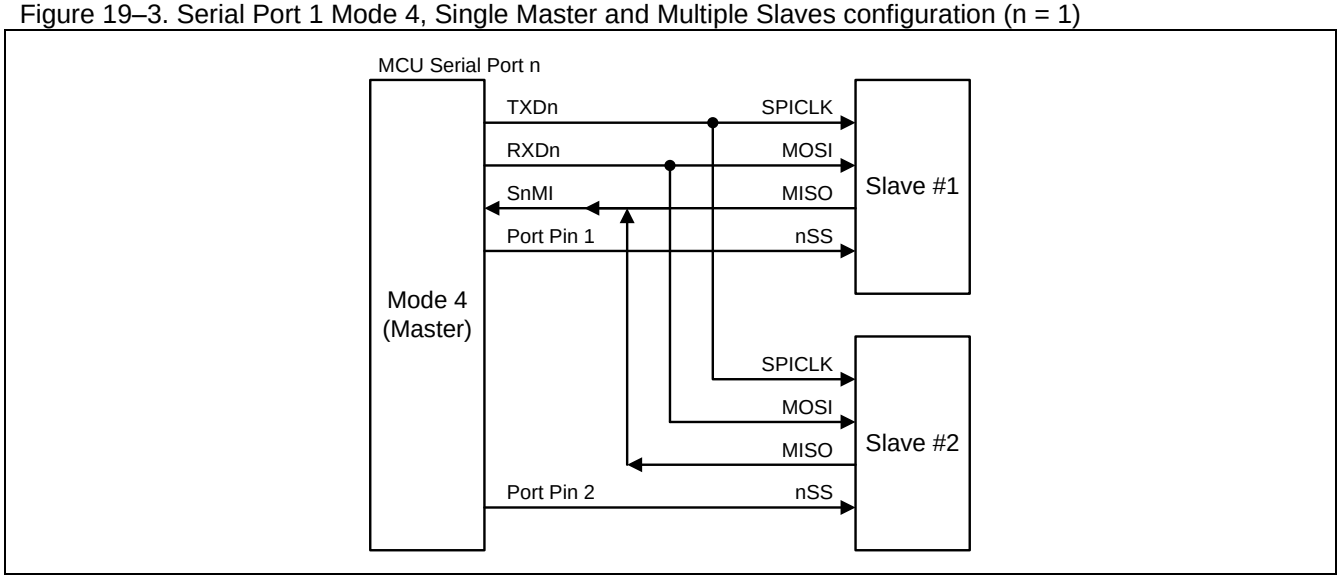

The SPI master satisfies the transfer with the full function SPI module of Megawin MG82/84 series MCU with CPOL, CPHA and DORD selection. For CPOL and CPHA condition, **MG82FG5C64** uses an easy way by initialize SPI clock assigned port pin (TXD1, P1.3/P3.4) polarity to fit them. Table 18–10 shows the serial port Mode 4 mapping with the four SPI operating mode.

Table 19–10. SPI mode mapping with Serial Port Mode 4 configuration

SPI Mode	CPOL	CPHA	Configuration in **MG82FG5C64** when TXD1 on P1.3
0	0	0	Clear P1.3 to “0”
1	0	1	Clear P1.3 to “0”
2	1	0	Set P1.3 to “1”
3	1	1	Set P1.3 to “1”

For bit order control (DORD) on SPI serial transfer, **MG82FG5C64** provides a SFR, BOREV, to reverse the bit order by software program. After MCU writing a MSB first data format to BOREV, MCU will get the LSB first data by reading BOREV back. The SPI master engine in serial port 1 Mode 4 is the LSB first transferred which is same as serial port 1 Mode 0. To support SPI MSB first shift, MCU must use the BOREV write/read operation to reverse the data bit order for SPI IN/OUT transmission. Figure 19–4 shows the BOREV configuration.

Figure 19–4. SFR BOREV read/write configuration

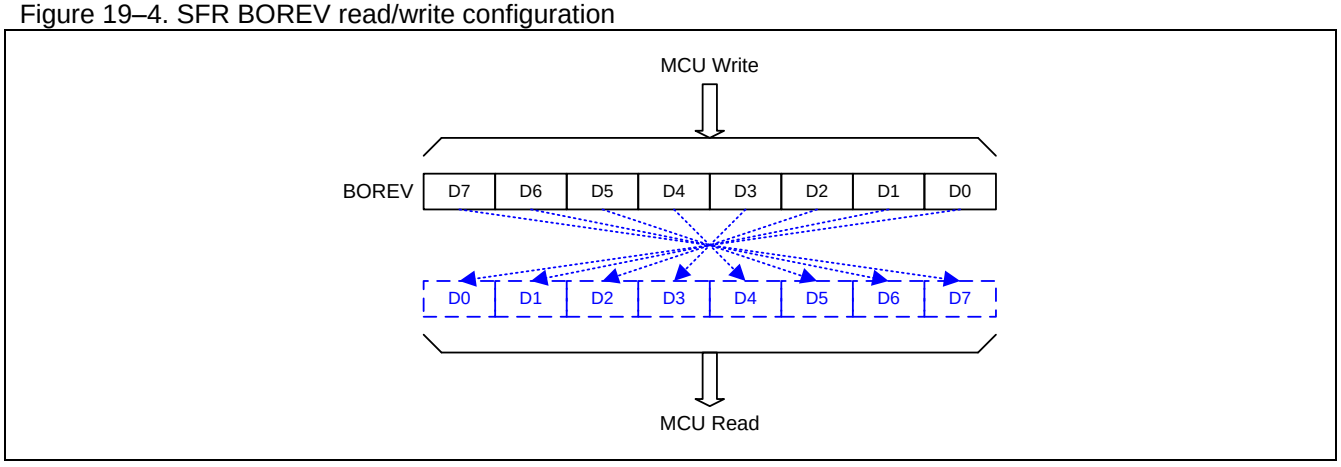

Transmission is initiated by any instruction that uses S1BUF as a destination register. The “write to S1BUF” signal triggers the UART engine to start the transmission. The data in the S1BUF would be shifted into the RXD1 pin as MOSI serial data. The SPI shift clock is built on the TXD1 pin for SPICLK output. After eight raising edge of shift clocks passing, TI1 would be asserted by hardware to indicate the end of transmission. And the contents on the S1MI pin would be sampled and shifted into shift register. Then, “read S1BUF” can get the SPI shift-in data. Figure 19–5 shows the transmission waveform in Mode 0. RI1 will not be asserted in Mode 4.

Figure 19–5. Serial Port 1 Mode 4 transmission waveform (n =1)

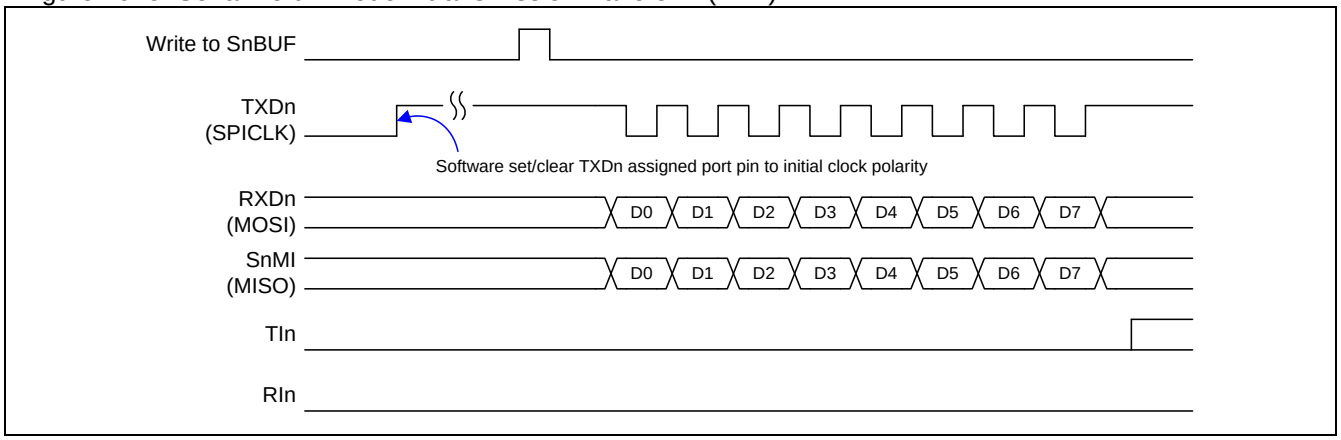

19.4. Pure Timer Mode for S1BRG

If the UART1 is not necessary in application or pending by software, setting S1TME=1 in the **MG82FG5C64** provides the pure timer operating mode on S1 Baud Rate Generator (S1BRG). This timer operates as an 8-bit auto-reload timer and provides the overflow flag which is set on the TI1 (S1CON.1). The RI1 (S1CON.0) serves the port change detector on RXD1 port pin. Both of TI1 and RI1 in this mode keep the interrupt capability on UART1 interrupt resource and have the individual interrupt enabled control (TB81 & REN1). RB81 selects the RI1 detection level on RXD1 port input. If RB81=0, RI1 will be set by REN1=1 and RXD1 pin falling edge detecting. Otherwise, RI1 will detect the rising edge on RXD1 port pin. In MCU power-down mode, the RI1 is forced to level-sensitive operation and has the capability to wake up CPU if UART1 interrupt is enabled.

This pure timer mode has a clock input option from Timer 1 overflow which is a cascaded counter to perform a 16-bit timer. When S1BRC overflows, it can be the clock source of UART0, PCA, SPI, TWSI, TWI1 and ADC or toggle the port pin output. “S1CKOE=1” enables the S1CKO output on port pin and masks the RI1 interrupt.

The configuration of the Pure Timer mode of S1BRG is shown in Figure 19–6.

Figure 19–6. Timer Mode Configuration for S1BRG (S1TME=1)

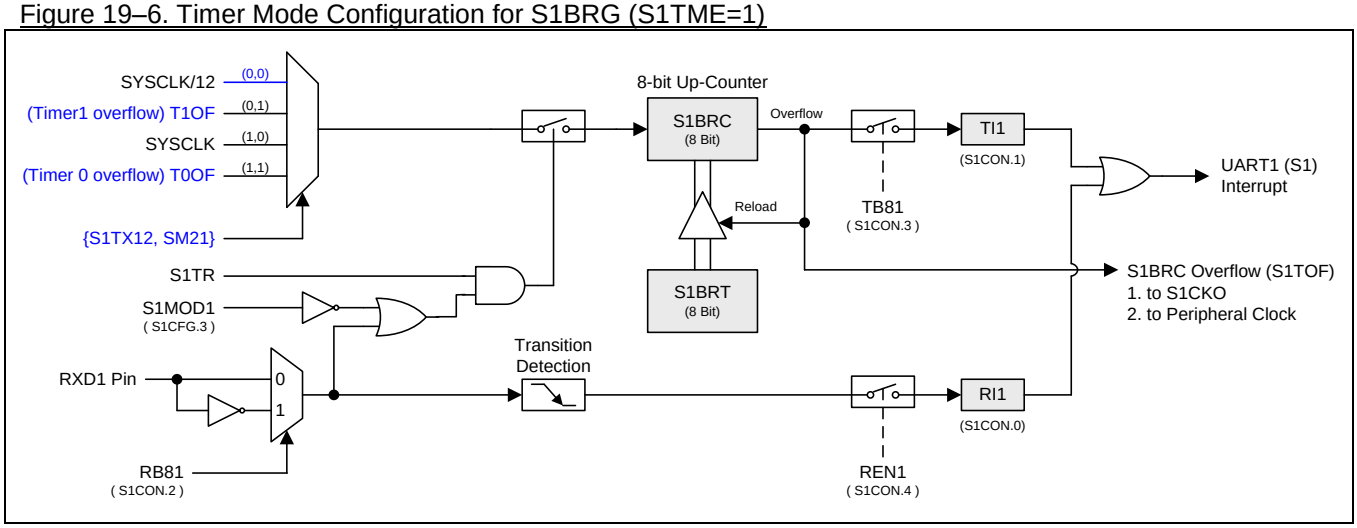

19.5. S1BRT Programmable Clock Output

When S1BRC overflows, the overflow flag, S1TOF, provides the toggle source for S1CKO and peripheral clock. The input clock (SYSCLK/12 or SYSCLK) increases the 8-bit timer, S1BRC. The timer repeatedly counts to overflow from a loaded value. Once overflows occur, the content of S1BRT is loaded into S1BRC for the consecutive counting. Figure 19–7 shows the block diagram for the Clock Output mode of S1 Baud Rate Generator. The following formula gives the clock-out frequency.

$$\text{S1T Clock-out Frequency} = \frac{\text{SYSCLK Frequency}}{n \times (256 - \text{S1BRT})}$$

; n=24, if S1TX12=0
; n=2, if S1TX12=1

Note:
(1) For SYSCLK=12MHz & S1TX12=0, S1BRG has a programmable output frequency range from 1.95KHz to 500KHz.
(2) For SYSCLK=12MHz & S1TX12=1, S1BRG has a programmable output frequency range from 23.43KHz to 6MHz.

Figure 19–7. S1BRG in Clock Output Mode

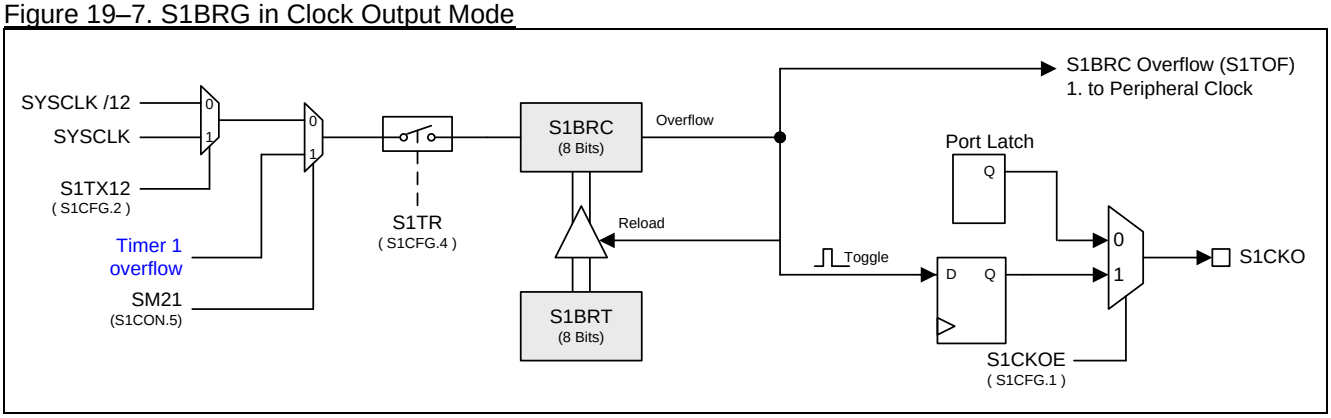

How to Program 8-bit S1BRG in Clock-out Mode

- Select S1CFG.S1TX12 bit and S1CON.SM21 bit to decide the S1BRG clock source.
- Determine the 8-bit reload value from the formula and enter it in the S1BRT and S1BRC registers.
- Set S1CKOE bit in S1CFG register.
- Set S1TR to start the S1BRC timer.

19.6. S1 Baud Rate Generator for S0

In the Mode 1 and Mode 3 operation of the UART0, the software can select Timer 1 as the Baud Rate Generator by clearing bits TCLK and RCLK in T2CON register. At this time, if URTS bit (S0CFG.7) is set, then Timer 1 overflow signal will be replaced by the overflow signal of the UART1 Baud Rate Generator (S1BRG). In other words, the user can adopt S1BRG as the Baud Rate Generator for Mode 1 or Mode 3 of the UART0 as long as RCLK=0, TCLK=0 and URTS=1. In this condition, Timer 1 is free for other application. Of course, if UART1 (Mode 1 or Mode 3) is also operated at this time, these two UARTs will have the same baud rates.

Figure 19–8. Additional Baud Rate Source for the UART0

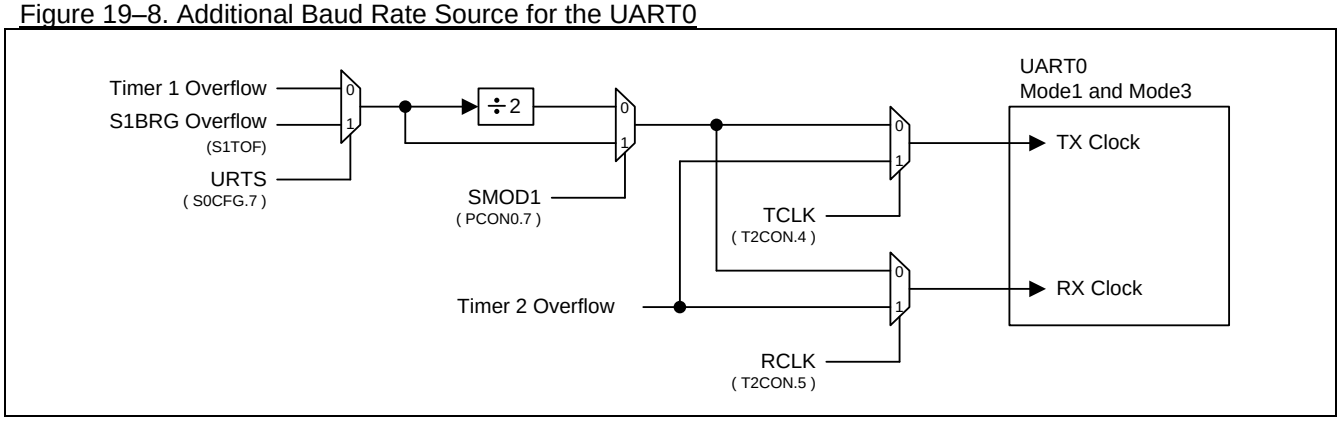

19.7. Serial Port 1 Register

The following special function registers are related to the operation of the UART1:

S1CON: Serial port 1 Control Register

SFR Page = **1 & 2 only**

SFR Address = 0x98 RESET = 0000-0000

7	6	5	4	3	2	1	0
SM01	SM11	SM21	REN1	TB81	RB81	TI1	RI1
R/W	**R/W**	**R/W**	**R/W**	**R/W**	**R/W**	**R/W**	**R/W**

Bit 7: SM01, Serial port 1 mode bit 0.
Bit 6: SM11, Serial port 1 mode bit 1.

SM31	SM01	SM11	Mode	Description	Baud Rate
0	0	0	0	shift register	SYSCLK/12 or SYSCLK/4
0	0	1	1	8-bit UART	variable
0	1	0	2	9-bit UART	SYSCLK/64 or SYSCKLK/32
0	1	1	3	9-bit UART	variable
1	0	0	4	SPI Master	SYSCLK/12 or SYSCLK/4
1	0	1	5	LIN Bus	variable
1	1	0	6	Reserved	Reserved
1	1	1	7	SMC Interface	variable

Bit 5: Serial port 1 mode bit 2.
0: Disable SM21 function.
1: Enable the automatic address recognition feature in Modes 2 and 3. If SM21=1, RI1 will not be set unless the received 9th data bit is 1, indicating an address, and the received byte is a Given or Broadcast address. In mode1, if SM21=1 then RI1 will not be set unless a valid stop Bit was received, and the received byte is a Given or Broadcast address. In Mode 0, SM21 should be 0. In S1BRG Timer mode….

Bit 4: REN1, Enable serial reception.
0: Clear by software to disable reception.
1: Set by software to enable reception.

Bit 3: TB81, The 9th data bit that will be transmitted in Modes 2 and 3. Set or clear by software as desired.

Bit 2: RB81, In Modes 2 and 3, the 9th data bit that was received. In Mode 1, if SM21 = 0, RB81 is the stop bit that was received. In Mode 0, RB81 is not used.

Bit 1: TI1. Transmit interrupt flag.
0: Must be cleared by software.
1: Set by hardware at the end of the 8th bit time in Mode 0, or at the beginning of the stop bit in the other modes, in any serial transmission.

Bit 0: RI1. Receive interrupt flag.
0: Must be cleared by software.
1: Set by hardware at the end of the 8th bit time in Mode 0, or halfway through the stop bit time in the other modes, in any serial reception (except see SM21).

S1BUF: Serial port 1 Buffer Register

SFR Page = **1 & 2only**

SFR Address = 0x99 RESET = XXXX-XXXX

7	6	5	4	3	2	1	0
S1BUF.7	S1BUF.6	S1BUF.5	S1BUF.4	S1BUF.3	S1BUF.2	S1BUF.1	S1BUF.0
R/W	**R/W**	**R/W**	**R/W**	**R/W**	**R/W**	**R/W**	**R/W**

Bit 7~0: It is used as the buffer register in transmission and reception.

S1BRT: Serial port 1 Baud Rate Timer Reload Register

SFR Page = **1 & 2 only**

SFR Address = 0x9A RESET = 0000-0000

7	6	5	4	3	2	1	0
S1BRT.7	S1BRT.6	S1BRT.5	S1BRT.4	S1BRT.3	S1BRT.2	S1BRT.1	S1BRT.0
R/W	**R/W**	**R/W**	**R/W**	**R/W**	**R/W**	**R/W**	**R/W**

Bit 7~0: It is used as the reload value register for baud rate timer generator that works in a similar manner as Timer 1.

S1BRC: Serial port 1 Baud Rate Counter Register

SFR Page = **1 & 2 only**

SFR Address = 0x9B RESET = 0000-0000

7	6	5	4	3	2	1	0
S1BRC.7	S1BRC.6	S1BRC.5	S1BRC.4	S1BRC.3	S1BRC.2	S1BRC.1	S1BRC.0
R/W	**R/W**	**R/W**	**R/W**	**R/W**	**R/W**	**R/W**	**R/W**

Bit 7~0: It is used as the reload value register for baud rate timer generator that works in a similar manner as Timer 1. This register can be always read/written by software. If S1CFG.S1TME = 0, software writing S1BRT will store the data content to S1BRT and S1BRC concurrently.

S1CFG: Serial Port 1 Configuration Register

SFR Page = 1 & 2 only

SFR Address = 0x9C RESET = 0010-0000

7	6	5	4	3	2	1	0
SM31	EVPS1	S1DOR	S1TR	S1MOD1	S1TX12	S1CKOE	S1TME
R/W	**R/W**	**R/W**	**R/W**	**R/W**	**R/W**	**R/W**	**R/W**

Bit 7: SM31, Serial Port 1 Mode control bit 3.

SM31	SM01	SM11	Mode	Description	Baud Rate
0	0	0	0	shift register	SYSCLK/12
0	0	1	1	8-bit UART	variable
0	1	0	2	9-bit UART	SYSCLK/64, /32
0	1	1	3	9-bit UART	variable
1	0	0	4	SPI Master	SYSCLK/12
1	0	1	5	LIN Bus	variable
1	1	0	6	Reserved	Reserved
1	1	1	7	SMC Interface	variable

Bit 6: EVPS1, Even Parity Select in UART1 Mode 7.

Bit 5: S1DOR, Serial Port 1 data order control in all operating modes.
0: The MSB of the data byte is transmitted first.
1: The LSB of the data byte is transmitted first. S1DOR is set to “1” in default.

Bit 4: S1TR, UART1 Baud Rate Generator control bit.
0: Clear to turn off the S1BRG.
1: Set to turn on S1BRG.

Bit 3: S1MOD1, UART1 double baud rate enable bit.
0: Disable the double baud rate function for UART1.
1: Enable the double baud rate function for UART1.

Bit 2: S1TX12, UART1 Baud Rate Generator clock source select
0: Clear to select SYSCLK/12 as the clock source for S1BRG.
1: Set to select SYSCLK as the clock source for S1BRG.

Bit 1: S1CKOE, Serial Port 1 BRG Clock Output Enable.
0: Disable the S1CKO output on the port pin.
1: Enable the S1CKO output on the port pin.

Bit 0: S1TME, Serial port 1 BRG Timer Mode Enabled.
0: Keep S1BRT to service Serial Port 1 (UART1).
1: Disable Serial Port 1 function and release the S1BRT as an 8-bit auto-reload timer. In this mode, there is an additional function for RXD1 port pin change detector.

AUXR1: Auxiliary Control Register 1

SFR Page = 0~F
SFR Address = 0xA2 RESET = 0000-0000

7	6	5	4	3	2	1	0
KBIPS1	KBIPS0	SPIPS0	**S1PS1**	**S1PS0**	T01PS0	EXTRAM	DPS
R/W	R/W	R/W	R/W	R/W	R/W	R/W	R/W

Bit 4~3: S1PS1~0, Serial Port 1 (UART1) Port Selection [1:0]

S1PS2	S1PS1~0	RXD1	TXD1
0	00	P1.2	P1.3
0	01	P3.2	P3.3
0	10	P0.6	P0.7
0	11	P0.0	P0.5
1	xx	P7.0	P7.1

AUXR6: Auxiliary Register 6

SFR Page = 3 only
SFR Address = 0xA4 RESET = 0000-0000

7	6	5	4	3	2	1	0
HKBIPS1	HKBIPS0	TWI1PS1	TWI1PS0	C1IC4S0	C1PS0	PCAPS0	**S1PS2**
R/W	R/W	R/W	R/W	R/W	R/W	R/W	R/W

AUXR5: Auxiliary Control Register 5

SFR Page = 2 Only
SFR Address = 0xA4 RESET = 0000-0000

7	6	5	4	3	2	1	0
SnMIPS	S3PS0	S2PS0	C1PPS0	T0OPS0	T4PS0	T3PS1	T3PS0
R/W	R/W	R/W	R/W	R/W	R/W	R/W	R/W

Bit 7: SnMIPS, {S0MI, S1MI, S2MI, S3MI} Port Selection.

SnMIPS	S0MI	S1MI	S2MI	S3MI
0	P4.0	P4.1	P4.2	P4.3
1	P5.3	P5.4	P5.5	P5.6

20. Serial Port 2 (UART2)

The **MG82FG5C64** is equipped with a third UART (hereafter, called UART2), which has **5** operation modes, Mode 0 ~ Mode 4, the same as the secondary UART (UART1) except the following differences:

(1) The UART2 use the dedicated Baud Rate Timer as its Baud Rate Generator (S2BRG).
(2) The UART2 uses TXD2 and RXD2 for transmit and receive, respectively.
(3) The Baud Rate Generator provides the toggle source for S2CKO and peripheral clock.
(4) No LIN bus in mode 5 in UART2.

The UART2, UART1 and UART0 in **MG82FG5C64** can operate simultaneously in identical or different modes and communication speeds.

20.1. Pure Timer Mode for S2BRG

Figure 20–1. Timer Mode Configuration for S2BRG (S2TME=1)

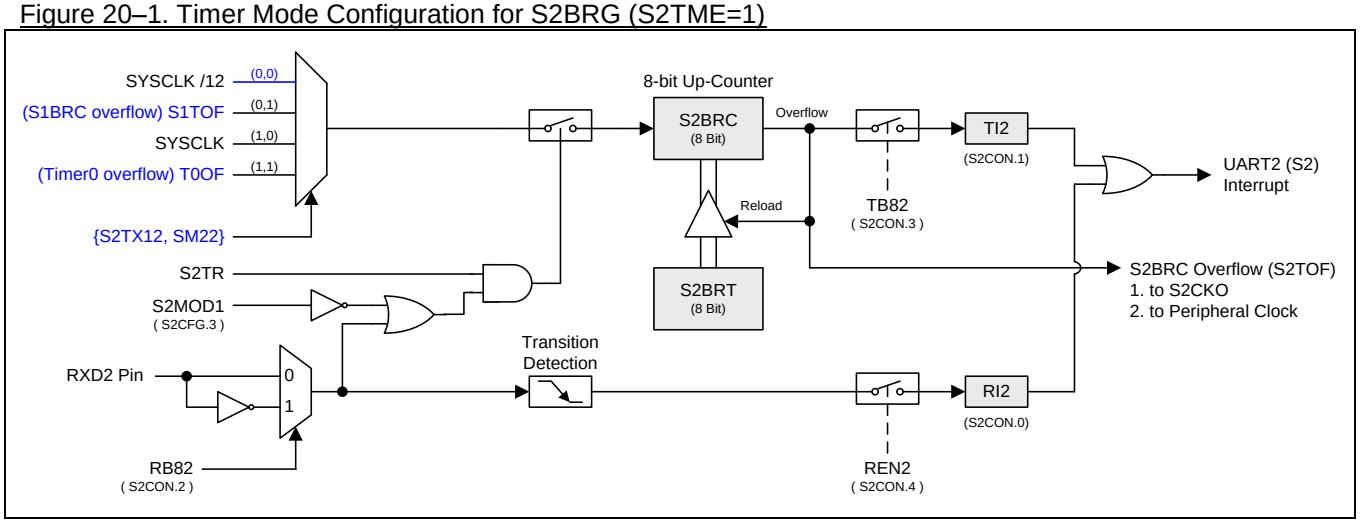

20.2. Serial Port 2 Register

The following special function registers are related to the operation of the UART2:

S2CON: Serial port 2 Control Register

SFR Page = **3 only**

SFR Address = 0x98 RESET = 0000-0000

7	6	5	4	3	2	1	0
SM02	SM12	SM22	REN2	TB82	RB82	TI2	RI2
R/W	**R/W**	**R/W**	**R/W**	**R/W**	**R/W**	**R/W**	**R/W**

Bit 7: SM02, Serial port 2 mode bit 0.
Bit 6: SM12, Serial port 2 mode bit 1.

SM32	SM02	SM12	Mode	Description	Baud Rate
0	0	0	0	shift register	SYSCLK/12 or SYSCLK/4
0	0	1	1	8-bit UART	Variable
0	1	0	2	9-bit UART	SYSCLK/64 or SYSCKLK/32
0	1	1	3	9-bit UART	Variable
1	0	0	4	SPI Master	SYSCLK/12 or SYSCLK/4
1	0	1	5	Reserved	Reserved
1	1	0	6	Reserved	Reserved
1	1	1	7	SMC Interface	Variable

Bit 5: Serial port 2 mode bit 2.
0: Disable SM22 function.
1: Enable the automatic address recognition feature in Modes 2 and 3. If SM22=1, RI2 will not be set unless the received 9th data bit is 1, indicating an address, and the received byte is a Given or Broadcast address. In mode1, if SM22=1 then RI2 will not be set unless a valid stop Bit was received, and the received byte is a Given or Broadcast address. In Mode 0, SM22 should be 0. In S2BRG Timer mode….

Bit 4: REN2, Enable serial reception.
0: Clear by software to disable reception.
1: Set by software to enable reception.

Bit 3: TB82, The 9th data bit that will be transmitted in Modes 2 and 3. Set or clear by software as desired.

Bit 2: RB82, In Modes 2 and 3, the 9th data bit that was received. In Mode 1, if SM22 = 0, RB82 is the stop bit that was received. In Mode 0, RB82 is not used.

Bit 1: TI2. Transmit interrupt flag.
0: Must be cleared by software.
1: Set by hardware at the end of the 8th bit time in Mode 0, or at the beginning of the stop bit in the other modes, in any serial transmission.

Bit 0: RI2. Receive interrupt flag.
0: Must be cleared by software.
1: Set by hardware at the end of the 8th bit time in Mode 0, or halfway through the stop bit time in the other modes, in any serial reception (except see SM22).

S2BUF: Serial port 2 Buffer Register

SFR Page = **3 only**

SFR Address = 0x99 RESET = XXXX-XXXX

7	6	5	4	3	2	1	0
S2BUF.7	S2BUF.6	S2BUF.5	S2BUF.4	S2BUF.3	S2BUF.2	S2BUF.1	S2BUF.0
R/W	**R/W**	**R/W**	**R/W**	**R/W**	**R/W**	**R/W**	**R/W**

Bit 7~0: It is used as the buffer register in transmission and reception.

S2BRT: Serial port 2 Baud Rate Timer Reload Register

SFR Page = **3 only**

SFR Address = 0x9A RESET = 0000-0000

7	6	5	4	3	2	1	0
S2BRT.7	S2BRT.6	S2BRT.5	S2BRT.4	S2BRT.3	S2BRT.2	S2BRT.1	S2BRT.0
R/W	**R/W**	**R/W**	**R/W**	**R/W**	**R/W**	**R/W**	**R/W**

Bit 7~0: It is used as the reload value register for baud rate timer generator that works in a similar manner as Timer 1.

S2BRC: Serial port 2 Baud Rate Counter Register

SFR Page = **3 only**

SFR Address = 0x9B RESET = 0000-0000

7	6	5	4	3	2	1	0
S2BRC.7	S2BRC.6	S2BRC.5	S2BRC.4	S2BRC.3	S2BRC.2	S2BRC.1	S2BRC.0
R/W	**R/W**	**R/W**	**R/W**	**R/W**	**R/W**	**R/W**	**R/W**

Bit 7~0: It is used as the reload value register for baud rate timer generator that works in a similar manner as Timer 1. This register can be always read/written by software. If S2CFG.S2TME = 0, software writing S2BRT will store the data content to S2BRT and S2BRC concurrently.

S2CFG: Serial Port 2 Configuration Register

SFR Page = 3 only

SFR Address = 0x9C RESET = 0010-0000

7	6	5	4	3	2	1	0
SM32	EVPS2	S2DOR	S2TR	S2MOD1	S2TX12	S2CKOE	S2TME
R/W	**R/W**	**R/W**	**R/W**	**R/W**	**R/W**	**R/W**	**R/W**

Bit 7: SM32, Serial Port 2 Mode control bit 3.

SM32	SM02	SM12	Mode	Description	Baud Rate
0	0	0	0	shift register	SYSCLK/12
0	0	1	1	8-bit UART	variable
0	1	0	2	9-bit UART	SYSCLK/64, /32
0	1	1	3	9-bit UART	variable
1	0	0	4	SPI Master	SYSCLK/12
1	0	1	5	Reserved	Reserved
1	1	0	6	Reserved	Reserved
1	1	1	7	SMC Interface	variable

Bit 6: EVPS2, Even Parity Select in UART2 Mode 7.

Bit 5: S2DOR, Serial Port 2 data order control in all operating modes.
0: The MSB of the data byte is transmitted first.
1: The LSB of the data byte is transmitted first. S2DOR is set to “1” in default.

Bit 4: S2TR, UART2 Baud Rate Generator control bit.
0: Clear to turn off the S2BRG.
1: Set to turn on S2BRG.

Bit 3: S2MOD1, UART2 double baud rate enable bit.
0: Disable the double baud rate function for UART2.
1: Enable the double baud rate function for UART2.

Bit 2: S2TX12, UART2 Baud Rate Generator clock source select
0: Clear to select SYSCLK/12 as the clock source for S2BRG.
1: Set to select SYSCLK as the clock source for S2BRG.

Bit 1: S2CKOE, Serial Port 2 BRG Clock Output Enable.
0: Disable the S2CKO output on the port pin.
1: Enable the S2CKO output on the port pin.

Bit 0: S2TME, Serial port 2 BRG Timer Mode Enabled.
0: Keep S2BRT to service Serial Port 2 (UART2).
1: Disable Serial Port 2 function and release the S2BRT as an 8-bit auto-reload timer. In this mode, there is an additional function for RXD2 port pin change detector.

AUXR5: Auxiliary Control Register 5

SFR Page = 2 Only
SFR Address = 0xA4 RESET = 0000-0000

7	6	5	4	3	2	1	0
SnMIPS	S3PS0	**S2PS0**	C1PPS0	T0OPS0	T4PS0	T3PS1	T3PS0
R/W	**R/W**	**R/W**	**R/W**	**R/W**	**R/W**	**R/W**	**R/W**

Bit 7: SnMIPS, {S0MI, S1MI, S2MI, S3MI} Port Selection.

SnMIPS	S0MI	S1MI	S2MI	S3MI
0	P4.0	P4.1	P4.2	P4.3
1	P5.3	P5.4	P5.5	P5.6

Bit 5: S2PS0, Serial Port 2 (UART2) Port Selection 0.

S2PS0	RXD2	TXD2
0	P3.2	P3.3
1	P5.7	P6.7

21. Serial Port 3 (UART3)

The **MG82FG5C64** is equipped with a 4th UART (hereafter, called UART3), which has **5** operation modes, Mode 0 ~ Mode 4, the same as the secondary UART (UART1) except the following differences:

(1) The UART3 use the dedicated Baud Rate Timer as its Baud Rate Generator (S3BRG).
(2) The UART3 uses TXD3 and RXD3 for transmit and receive, respectively.
(3) The Baud Rate Generator provides the toggle source for S3CKO and peripheral clock.
(4) No LIN bus in mode 5 in UART3.

The UART2, UART1 and UART0 in **MG82FG5C64** can operate simultaneously in identical or different modes and communication speeds.

21.1. Pure Timer Mode for S3BRG

Figure 21–1. Timer Mode Configuration for S3BRG (S3TME=1)

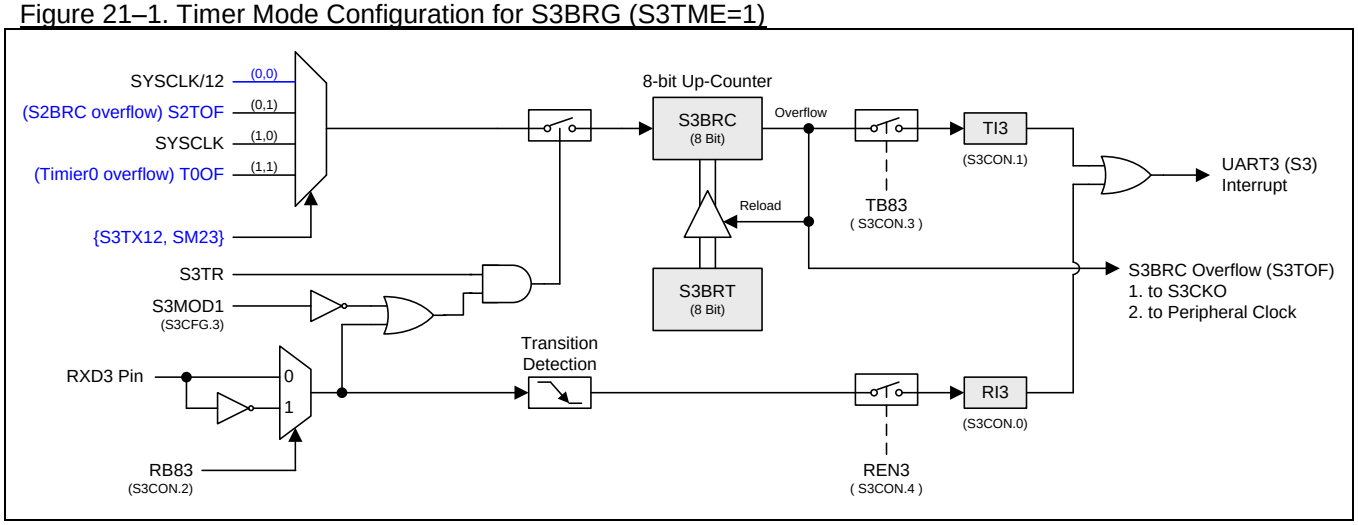

21.2. Serial Port 3 Register

The following special function registers are related to the operation of the UART3:

S3CON: Serial port 3 Control Register

SFR Page = **4 only**

SFR Address = 0x98 RESET = 0000-0000

7	6	5	4	3	2	1	0
SM03	SM13	SM23	REN3	TB83	RB83	TI3	RI3
R/W	**R/W**	**R/W**	**R/W**	**R/W**	**R/W**	**R/W**	**R/W**

Bit 7: SM03, Serial port 3 mode bit 0.
Bit 6: SM13, Serial port 3 mode bit 1.

SM33	SM03	SM13	Mode	Description	Baud Rate
0	0	0	0	shift register	SYSCLK/12 or SYSCLK/4
0	0	1	1	8-bit UART	Variable
0	1	0	2	9-bit UART	SYSCLK/64 or SYSCKLK/32
0	1	1	3	9-bit UART	Variable
1	0	0	4	SPI Master	SYSCLK/12 or SYSCLK/4
1	0	1	5	Reserved	Reserved
1	1	0	6	Reserved	Reserved
1	1	1	7	SMC Interface	Variable

Bit 5: Serial port 3 mode bit 2.
0: Disable SM23 function.
1: Enable the automatic address recognition feature in Modes 2 and 3. If SM23=1, RI3 will not be set unless the received 9th data bit is 1, indicating an address, and the received byte is a Given or Broadcast address. In mode1, if SM23=1 then RI2 will not be set unless a valid stop Bit was received, and the received byte is a Given or Broadcast address. In Mode 0, SM23 should be 0. In S3BRG Timer mode….

Bit 4: REN3, Enable serial reception.
0: Clear by software to disable reception.
1: Set by software to enable reception.

Bit 3: TB83, The 9th data bit that will be transmitted in Modes 2 and 3. Set or clear by software as desired.

Bit 2: RB83, In Modes 2 and 3, the 9th data bit that was received. In Mode 1, if SM23 = 0, RB83 is the stop bit that was received. In Mode 0, RB83 is not used.

Bit 1: TI3. Transmit interrupt flag.
0: Must be cleared by software.
1: Set by hardware at the end of the 8th bit time in Mode 0, or at the beginning of the stop bit in the other modes, in any serial transmission.

Bit 0: RI3. Receive interrupt flag.
0: Must be cleared by software.
1: Set by hardware at the end of the 8th bit time in Mode 0, or halfway through the stop bit time in the other modes, in any serial reception (except see SM23).

S3BUF: Serial port 3 Buffer Register

SFR Page = **4 only**

SFR Address = 0x99 RESET = XXXX-XXXX

7	6	5	4	3	2	1	0
S3BUF.7	S3BUF.6	S3BUF.5	S3BUF.4	S3BUF.3	S3BUF.2	S3BUF.1	S3BUF.0
R/W	**R/W**	**R/W**	**R/W**	**R/W**	**R/W**	**R/W**	**R/W**

Bit 7~0: It is used as the buffer register in transmission and reception.

S3BRT: Serial port 3 Baud Rate Timer Reload Register

SFR Page = **4 only**

SFR Address = 0x9A RESET = 0000-0000

7	6	5	4	3	2	1	0
S3BRT.7	S3BRT.6	S3BRT.5	S3BRT.4	S3BRT.3	S3BRT.2	S3BRT.1	S3BRT.0
R/W	**R/W**	**R/W**	**R/W**	**R/W**	**R/W**	**R/W**	**R/W**

Bit 7~0: It is used as the reload value register for baud rate timer generator that works in a similar manner as Timer 1.

S3BRC: Serial port 3 Baud Rate Counter Register

SFR Page = **4 only**

SFR Address = 0x9B RESET = 0000-0000

7	6	5	4	3	2	1	0
S3BRC.7	S3BRC.6	S3BRC.5	S3BRC.4	S3BRC.3	S3BRC.2	S3BRC.1	S3BRC.0
R/W	**R/W**	**R/W**	**R/W**	**R/W**	**R/W**	**R/W**	**R/W**

Bit 7~0: It is used as the reload value register for baud rate timer generator that works in a similar manner as Timer 1. This register can be always read/written by software. If S3CFG.S32TME = 0, software writing S3BRT will store the data content to S3BRT and S3BRC concurrently.

S3CFG: Serial Port 3 Configuration Register

SFR Page = 4 only

SFR Address = 0x9C RESET = 0010-0000

7	6	5	4	3	2	1	0
SM33	EVPS3	S3DOR	S3TR	S3MOD1	S3TX12	S3CKOE	S3TME
R/W	R/W	R/W	R/W	R/W	R/W	R/W	R/W

Bit 7: SM33, Serial Port 3 Mode control bit 3.

SM33	SM03	SM13	Mode	Description	Baud Rate
0	0	0	0	shift register	SYSCLK/12
0	0	1	1	8-bit UART	variable
0	1	0	2	9-bit UART	SYSCLK/64, /32
0	1	1	3	9-bit UART	variable
1	0	0	4	SPI Master	SYSCLK/12
1	0	1	5	Reserved	Reserved
1	1	0	6	Reserved	Reserved
1	1	1	7	SMC Interface	variable

Bit 6: EVPS3, Even Parity Select in UART3 Mode 7.

Bit 5: S3DOR, Serial Port 3 data order control in all operating modes.
0: The MSB of the data byte is transmitted first.
1: The LSB of the data byte is transmitted first. S3DOR is set to “1” in default.

Bit 4: S3TR, UART3 Baud Rate Generator control bit.
0: Clear to turn off the S3BRG.
1: Set to turn on S3BRG.

Bit 3: S3MOD1, UART3 double baud rate enable bit.
0: Disable the double baud rate function for UART3.
1: Enable the double baud rate function for UART3.

Bit 2: S3TX12, UART3 Baud Rate Generator clock source select
0: Clear to select SYSCLK/12 as the clock source for S3BRG.
1: Set to select SYSCLK as the clock source for S3BRG.

Bit 1: S3CKOE, Serial Port 3 BRG Clock Output Enable.
0: Disable the S3CKO output on the port pin.
1: Enable the S3CKO output on the port pin.

Bit 0: S3TME, Serial port 3 BRG Timer Mode Enabled.
0: Keep S2BRT to service Serial Port 3 (UART3).
1: Disable Serial Port 3 function and release the S3BRT as an 8-bit auto-reload timer. In this mode, there is an additional function for RXD3 port pin change detector.

AUXR5: Auxiliary Control Register 5

SFR Page = 2 Only
SFR Address = 0xA4 RESET = 0000-0000

7	6	5	4	3	2	1	0
SnMIPS	**S3PS0**	S2PS0	C1PPS0	T0OPS0	T4PS0	T3PS1	T3PS0
R/W	**R/W**	**R/W**	**R/W**	**R/W**	**R/W**	**R/W**	**R/W**

Bit 7: SnMIPS, {S0MI, S1MI, S2MI, S3MI} Port Selection.

SnMIPS	S0MI	S1MI	S2MI	S3MI
0	P4.0	P4.1	P4.2	P4.3
1	P5.3	P5.4	P5.5	P5.6

Bit 6: S3PS0, Serial Port 3 (UART3) Port Selection 0.

S3PS0	RXD3	TXD3
0	P3.6	P3.7
1	P6.5	P6.6

22. Serial Peripheral Interface (SPI)

The **MG82FG5C64** provides a high-speed serial communication interface, the SPI interface. SPI is a full-duplex, high-speed and synchronous communication bus with two operation modes: Master mode and Slave mode. Up to 3 Mbps can be supported in either Master under a 12MHz system clock. It has a Transfer Completion Flag (SPIF), Write Collision Flag (WCOL) and Mode Fault flag (MODF) in the SPI status register (SPSTAT). And a specially designed Transmit Holding Register (THR) improves the transmit performance compared to the conventional SPI and THRF flag indicates the THR is full or empty. SPIBSY read-only flag reports the Busy state in SPI engine.

Figure 22–1. SPI Block Diagram

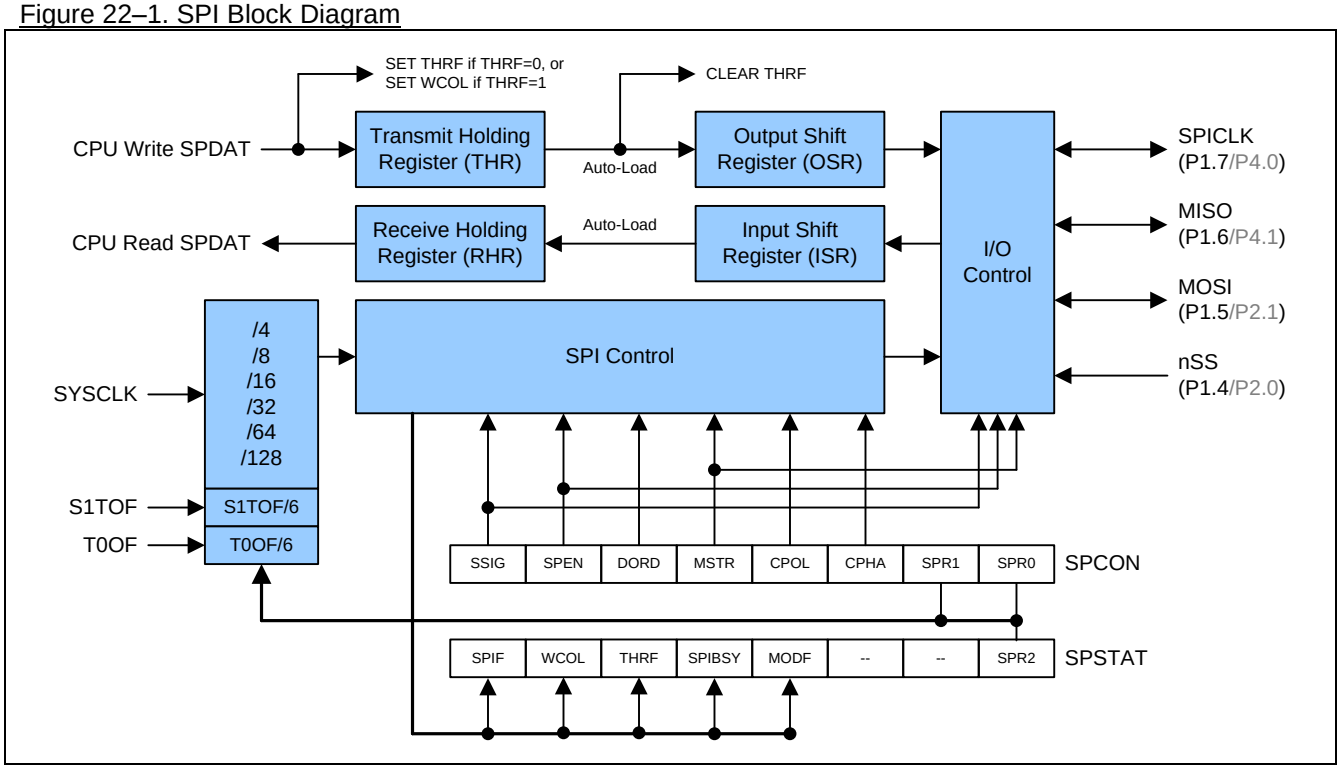

The SPI interface has four pins: MISO (P1.6), MOSI (P1.5), SPICLK (P1.7) and nSS (P1.4):

• SPICLK, MOSI and MISO are typically tied together between two or more SPI devices. Data flows from master to slave on the MOSI pin (Master Out / Slave In) and flows from slave to master on the MISO pin (Master In / Slave Out). The SPICLK signal is output in the master mode and is input in the slave mode. If the SPI system is disabled, i.e., SPEN (SPCTL.6) = 0, these pins function as normal I/O pins.

• /SS is the optional slave select pin. In a typical configuration, an SPI master asserts one of its port pins to select one SPI device as the current slave. An SPI slave device uses its nSS pin to determine whether it is selected. The /SS is ignored if any of the following conditions are true:

- If the SPI system is disabled, i.e. SPEN (SPCTL.6) = 0 (reset value).
- If the SPI is configured as a master, i.e., MSTR (SPCTL.4) = 1, and P1.4 (nSS) is configured as an output.
- If the /SS pin is ignored, i.e. SSIG (SPCTL.7) bit = 1, this pin is configured for port functions.

Note: See the AUXR1 in Section "4.3 Alternate Function Redirection", for its alternate pin-out option.

Note that even if the SPI is configured as a master (MSTR=1), it can still be **converted(or corrupt??)** to a slave by driving the nSS pin low (if SSIG=0). Should this happen, the SPIF bit (SPSTAT.7) will be set **and SPEN will be cleared**. (See Section "22.2.3 Mode Change on nSS-pin")

22.1. Typical SPI Configurations

22.1.1. Single Master & Single Slave

For the master: any port pin, including P1.4 (nSS), can be used to drive the nSS pin of the slave.
For the slave: SSIG is '0', andn/SS pin is used to determine whether it is selected.

Figure 22–2. SPI single master & single slave configuration

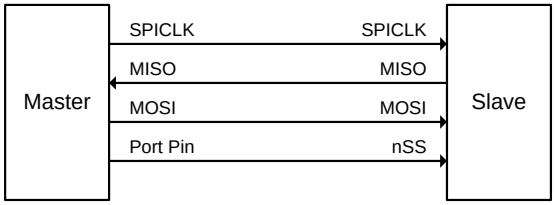

22.1.2. Dual Device, where either can be a Master or a Slave

Two devices are connected to each other and either device can be a master or a slave. When no SPI operation is occurring, both can be configured as masters with MSTR=1, SSIG=0 and P1.4 (nSS) configured in quasi-bidirectional mode. When any device initiates a transfer, it can configure P1.4 as an output and drive it low to force a "mode change to slave" in the other device. (See Section "22.2.3 Mode Change on nSS-pin")

Figure 22–3. SPI dual device configuration, where either can be a master or a slave

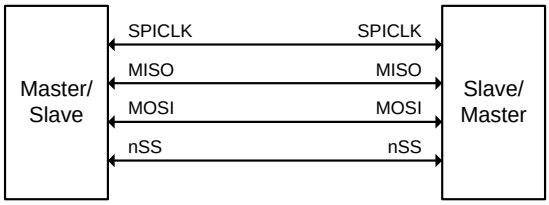

22.1.3. Single Master & Multiple Slaves

For the master: any port pin, including P1.4 (nSS), can be used to drive the nSS pins of the slaves. For all the slaves: SSIG is '0', and nSS pin are used to determine whether it is selected.

Figure 22–4. SPI single master multiple slaves configuration

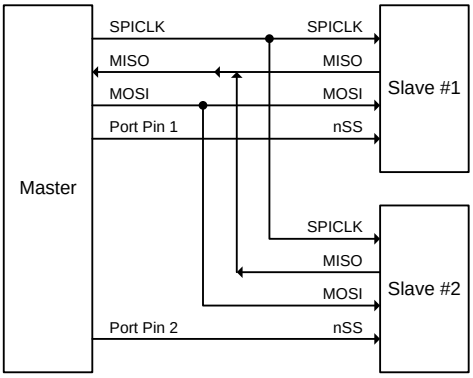

22.2. Configuring the SPI

Table 22–1 shows configuration for the master/slave modes as well as usages and directions for the modes.

Table 22–1. SPI Master and Slave Selection

SPEN (SPCTL.6)	SSIG (SPCTL.7)	nSS -pin	MSTR (SPCTL.4)	Mode	MISO -pin	MOSI -pin	SPICLK -pin	Remarks
0	X	X	X	SPI disabled	input	input	input	P1.4~P1.7 are used as general port pins.
1	0	0	0	Salve (selected)	output	input	input	Selected as slave.
1	0	1	0	Slave (not selected)	Hi-Z	input	input	Not selected.
1	0	0	1 ➔ 0	Slave (by mode change)	output	input	input	Mode change to slave if nSS pin is driven low, then MSTR will be cleared to '0' by H/W automatically, and SPEN is cleared, MODF is set.
1	0	1	1	Master (idle)	input	Hi-Z	Hi-Z	MOSI and SPICLK are at high impedance to avoid bus contention when the Master is idle.
				Master (active)		output	output	MOSI and SPICLK are push-pull when the Master is active.
1	1	X	0	Slave	output	input	input	
1	1	X	1	Master	input	output	output	

"X" means "don't care".

22.2.1. Additional Considerations for a Slave

When CPHA is 0, SSIG must be 0 and nSS pin must be negated and reasserted between each successive serial byte transfer. Note the SPDAT register cannot be written while nSS pin is active (low), and the operation is undefined if CPHA is 0 and SSIG is 1.

When CPHA is 1, SSIG may be 0 or 1. If SSIG=0, the nSS pin may remain active low between successive transfers (can be tied low at all times). This format is sometimes preferred for use in systems having a single fixed master and a single slave configuration.

22.2.2. Additional Considerations for a Master

In SPI, transfers are always initiated by the master. If the SPI is enabled (SPEN=1) and selected as master, writing to the SPI data register (SPDAT) by the master starts the SPI clock generator and data transfer. The data will start to appear on MOSI about one half SPI bit-time to one SPI bit-time after data is written to SPDAT.

Before starting the transfer, the master may select a slave by driving the nSS pin of the corresponding device low. Data written to the SPDAT register of the master is shifted out of MOSI pin of the master to the MOSI pin of the slave. And, at the same time the data in SPDAT register of the selected slave is shifted out on MISO pin to the MISO pin of the master.

After shifting one byte, the SPI clock generator stops, setting the transfer completion flag (SPIF) and an interrupt will be created if the SPI interrupt is enabled. The two shift registers in the master CPU and slave CPU can be considered as one distributed 16-bit circular shift register. When data is shifted from the master to the slave, data is also shifted in the opposite direction simultaneously. This means that during one shift cycle, data in the master and the slave are interchanged.

22.2.3. Mode Change on nSS-pin (corrupt master transaction…)

If SPEN=1, SSIG=0, MSTR=1 and /SS pin=1, the SPI is enabled in master mode. In this case, another master can drive this pin low to select this device as an SPI slave and start sending data to it. To avoid bus contention, the SPI becomes a slave. As a result of the SPI becoming a slave, the MOSI and SPICLK pins are forced to be an input and MISO becomes an output. The SPIF flag in SPSTAT is set, and if the SPI interrupt is enabled, an SPI interrupt will occur. User software should always check the MSTR bit. If this bit is cleared by a slave select and the user wants to continue to use the SPI as a master, the user must set the MSTR bit again, otherwise it will stay in slave mode.

22.2.4. Transmit Holding Register Full Flag

To speed up the SPI transmit performance, a specially designed Transmit Holding Register (THR) improves the latency time between byte to byte transmitting in CPU data moving. And a set THR-Full flag, THRF (SPSTAT.5), indicates the data in THR is valid and waiting for transmitting. If THR is empty (THRF=0), software writes one byte data to SPDAT will store the data in THR and set the THRF flag. If Output Shift Register (OSR) is empty, hardware will move THR data into OSR immediately and clear the THRF flag. In SPI mater mode, valid data in OSR triggers a SPI transmit. In SPI slave mode, valid data in OSR is waiting for another SPI master to shift out the data. If THR is full (THRF=1), software writes one byte data to SPDAT will set a write collision flag, WCOL (SPSTAT.6).

22.2.5. Write Collision

The SPI in **MG82FG5C64** is double buffered data both in the transmit direction and in the receive direction. New data for transmission cannot be written to the THR until the THR is empty. The read-only flag, THRF, indicates the THR is full or empty. The WCOL (SPSTAT.6) bit is set to indicate data collision when the data register is written during set THRF. In this case, the SPDAT writing operation is ignored.

While write collision is detected for a master or a slave, it is uncommon for a master because the master has full control of the transfer in progress. The slave, however, has no control over when the master will initiate a transfer and therefore collision can occur.

WCOL can be cleared in software by writing ‘1’ to the bit.

22.2.6. SPI Busy Flag

22.2.7. SPI Clock Rate Select

The SPI clock rate selection (in master mode) uses the SPR1 and SPR0 bits in the SPCON register and SPR2 in the SPSTAT register, as shown in Table 22–2.

Table 22–2. SPI Serial Clock Rates

SPR2	SPR1	SPR0	SPI Clock Selection	SPI Clock Rate @ SYSCLK=12MHz	SPI Clock Rate @ SYSCLK=48MHz
0	0	0	SYSCLK/4	3 MHz	12 MHz
0	0	1	SYSCLK/8	1.5 MHz	6 MHz
0	1	0	SYSCLK/16	750 KHz	3 MHz
0	1	1	SYSCLK/32	375 KHz	1.5 MHz
1	0	0	SYSCLK/64	187.5 KHz	750 KHz
1	0	1	SYSCLK/128	93.75 KHz	375 KHz
1	1	0	**S1TOF/6**	Variable	Variable
1	1	1	**T0OF/6**	Variable	Variable

Note:

1. *SYSCLK is the system clock.*
2. *S1TOF is UART1 Baud-Rate Generator Overflow.*
3. *T0OF is Timer 0 Overflow.*

22.3. Data Mode

Clock Phase Bit (CPHA) allows the user to set the edges for sampling and changing data. The Clock Polarity bit, CPOL, allows the user to set the clock polarity. The following figures show the different settings of Clock Phase Bit, CPHA.

Figure 22–5. SPI Slave Transfer Format with CPHA=0

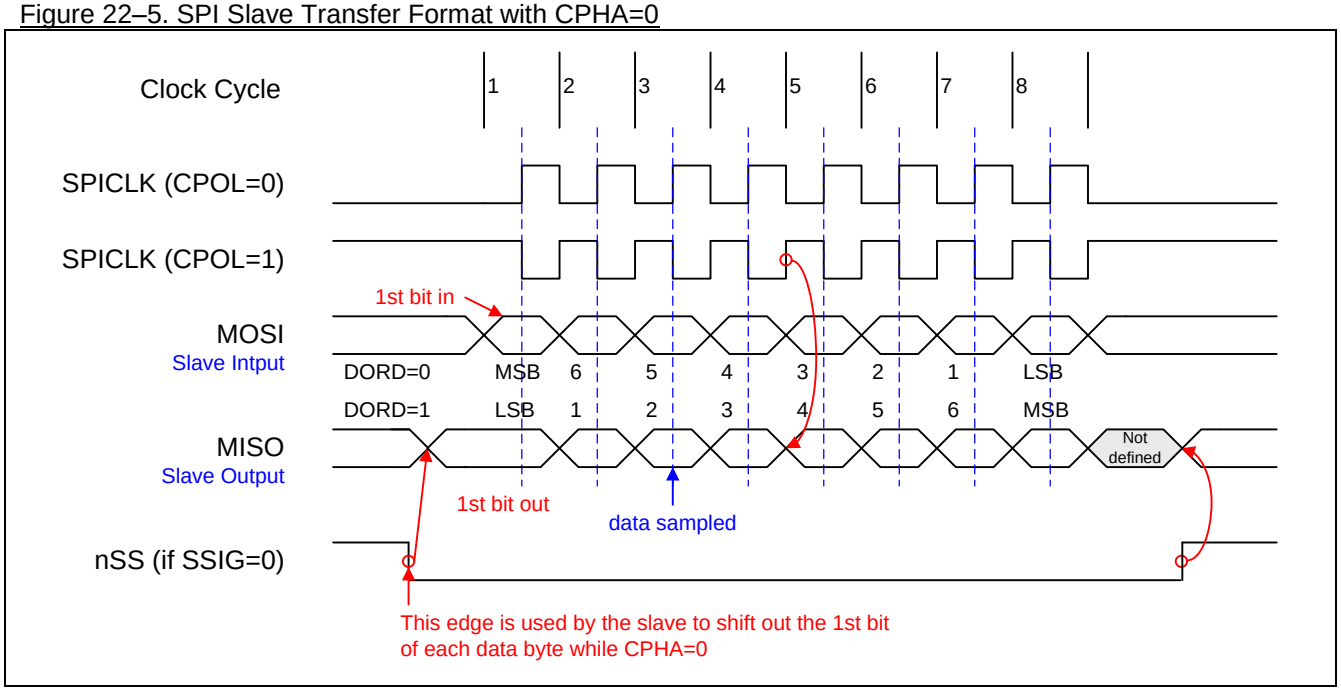

Figure 22–6. Slave Transfer Format with CPHA=1

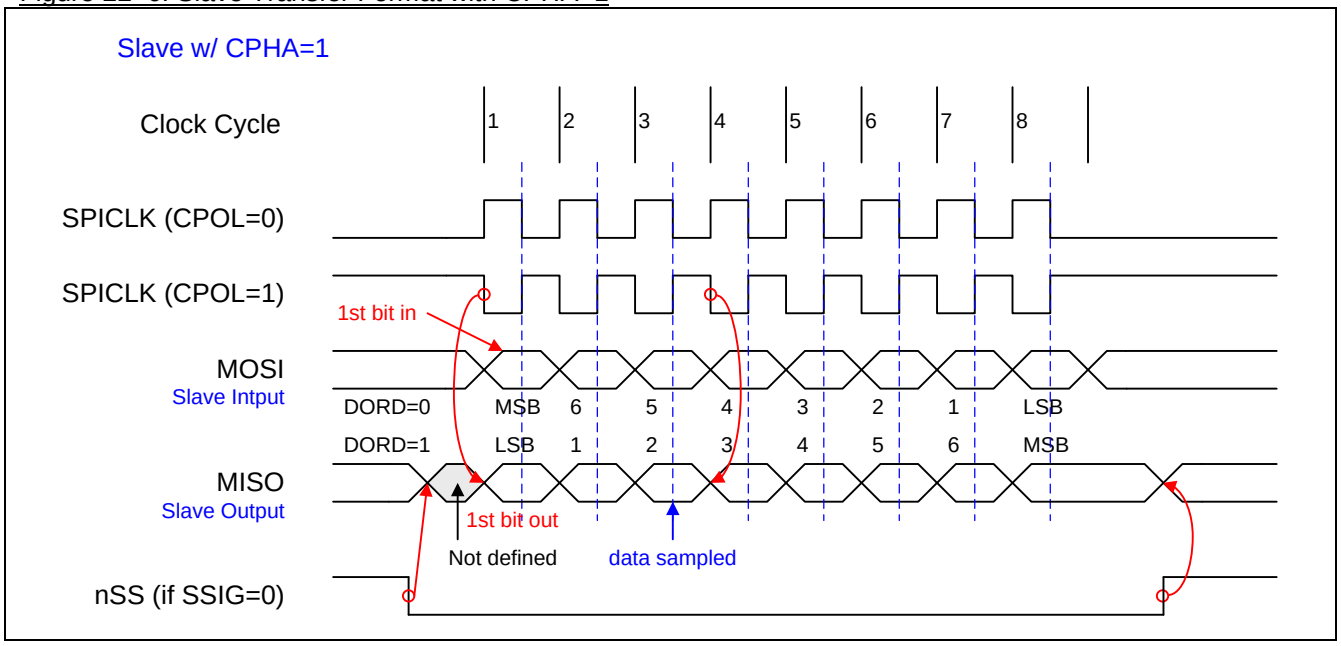

Figure 22–7. SPI Master Transfer Format with CPHA=0

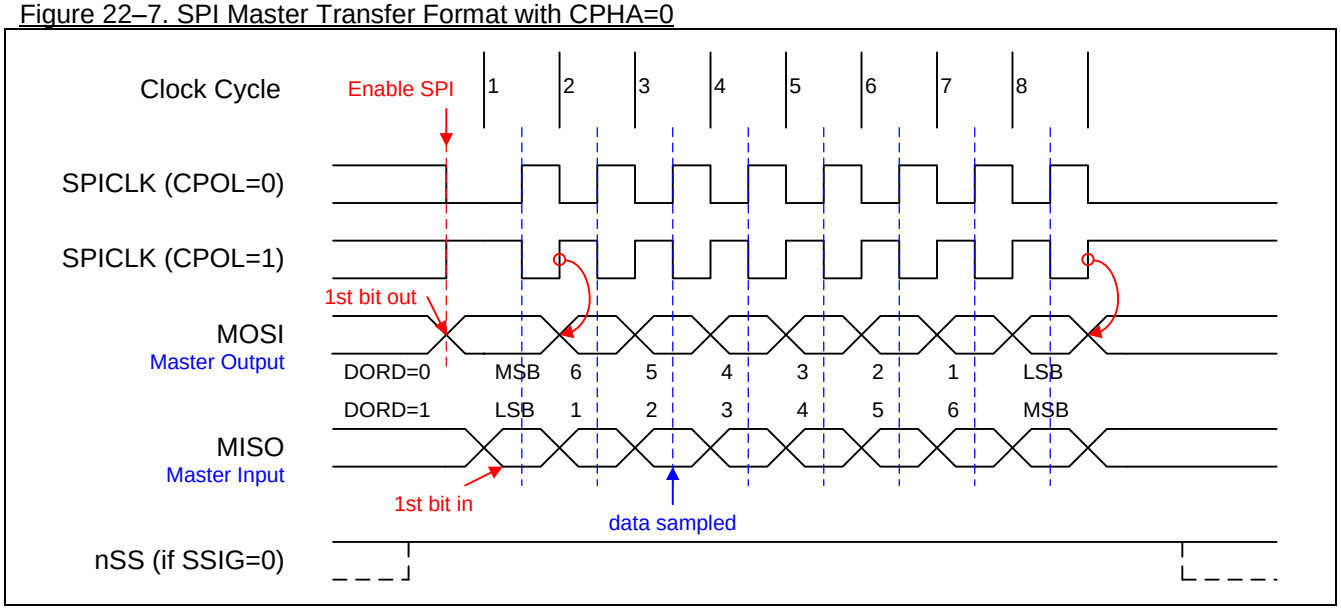

Figure 22–8. SPI Master Transfer Format with CPHA=1

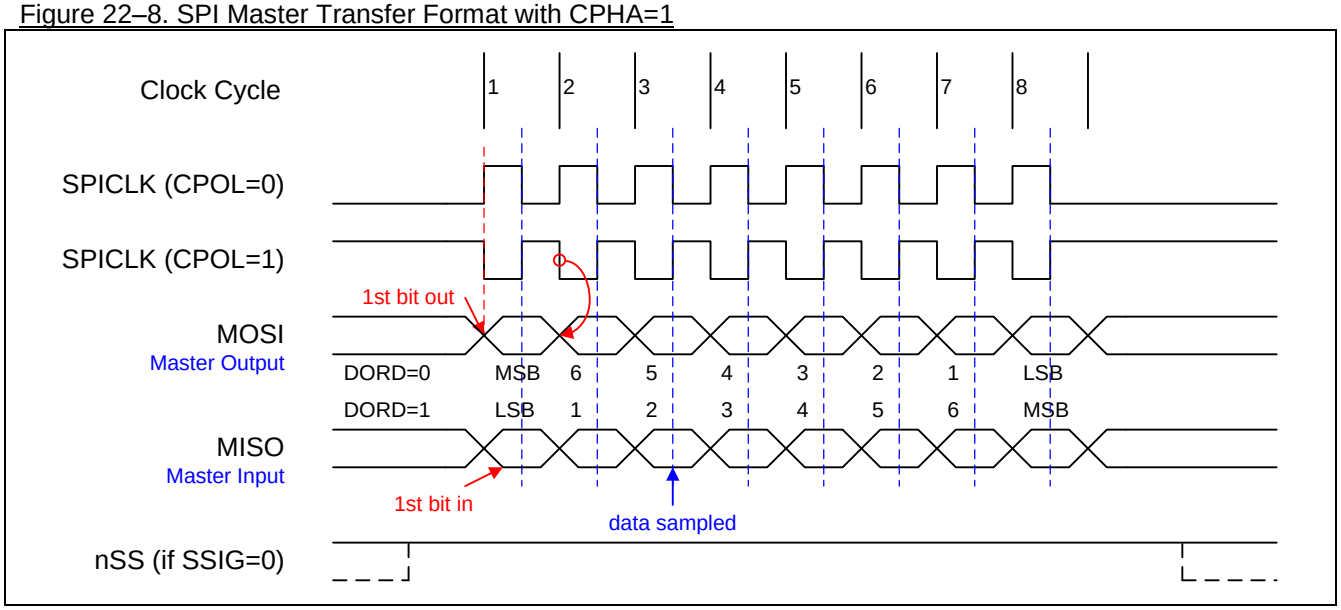

22.4. SPI Register

The following special function registers are related to the SPI operation:

SPCON: SPI Control Register

SFR Page = 0~F

SFR Address = 0x85 RESET= 0000-0100

7	6	5	4	3	2	1	0
SSIG	SPEN	DORD	MSTR	CPOL	CPHA	SPR1	SPR0
R/W	**R/W**	**R/W**	**R/W**	**R/W**	**R/W**	**R/W**	**R/W**

Bit 7: SSIG, nSS is ignored.
0: The nSS pin decides whether the device is a master or slave.
1: MSTR decides whether the device is a master or slave.

Bit 6: SPEN, SPI enable.
0: The SPI interface is disabled and all SPI pins will be general-purpose I/O ports.
1: The SPI is enabled.

Bit 5: DORD, SPI data order.
0: The MSB of the data byte is transmitted first.
1: The LSB of the data byte is transmitted first.

Bit 4: MSTR, Master/Slave mode select
0: Selects slave SPI mode.
1: Selects master SPI mode.

Bit 3: CPOL, SPI clock polarity select
0: SPICLK is low when Idle. The leading edge of SPICLK is the rising edge and the trailing edge is the falling edge.
1: SPICLK is high when Idle. The leading edge of SPICLK is the falling edge and the trailing edge is the rising edge.

Bit 2: CPHA, SPI clock phase select
0: Data is driven when /SS pin is low (SSIG=0) and changes on the trailing edge of SPICLK. Data is sampled on the leading edge of SPICLK.
1: Data is driven on the leading edge of SPICLK, and is sampled on the trailing edge.
(Note: If SSIG=1, CPHA must not be 1, otherwise the operation is not defined.)

Bit 1~0: SPR1-SPR0, SPI clock rate select 0 & 1 (associated with SPR2, when in master mode)

SPR2	SPR1	SPR0	SPI Clock Selection	SPI Clock Rate @ SYSCLK=12MHz	SPI Clock Rate @ SYSCLK=48MHz
0	0	0	SYSCLK/4	3 MHz	12 MHz
0	0	1	SYSCLK/8	1.5 MHz	6 MHz
0	1	0	SYSCLK/16	750 KHz	3 MHz
0	1	1	SYSCLK/32	375 KHz	1.5 MHz
1	0	0	SYSCLK/64	187.5 KHz	750 KHz
1	0	1	SYSCLK/128	93.75 KHz	375 KHz
1	1	0	**S1TOF/6**	Variable	Variable
1	1	1	**T0OF/6**	Variable	Variable

Note:

1. *SYSCLK is the system clock.*
2. *S1TOF is UART1 Baud-Rate Generator Overflow.*
3. *T0OF is Timer 0 Overflow.*

SPSTAT: SPI Status Register

SFR Page = 0~F

SFR Address = 0x84 RESET= 0000-0000

7	6	5	4	3	2	1	0
SPIF	WCOL	THRF	SPIBSY	MODF	DBEN	QPIEN	SPR2/ QDOE
R/W	**R/W**	**R**	**R**	**R/W**	**R/W**	**R/W**	**R/W**

Bit 7: SPIF, SPI transfer completion flag

0: **The SPIF is cleared in software by writing "1" to this bit.**

1: When a serial transfer finishes, the SPIF bit is set and an interrupt is generated if SPI interrupt is enabled. If nSS pin is driven low when SPI is in master mode with SSIG=0, SPIF will also be set to signal the "mode change".

Bit 6: WCOL, SPI write collision flag.

0: The WCOL flag is cleared in software by writing "1" to this bit.

1: The WCOL bit is set if the SPI data register, SPDAT, is written during a data transfer (see Section "22.2.5 Write Collision").

Bit 5: THRF, Transmit Holding Register (THR) Full flag. Read only.

0: Means the THR is "empty". This bit is cleared by hardware when the THR is empty. That means the data in THR is loaded (by H/W) into the Output Shift Register to be transmitted, and now the user can write the next data byte to SPDAT for next transmission.

1: Means the THR is "full". This bit is set by hardware just when SPDAT is written by software.

Bit 4, SPIBSY, SPI Busy flag. Read only.

0: It indicates SPI engine is idle and all shift registers are empty.

1: It is set to logic 1 when a SPI transfer is in progress (Master or slave Mode).

Bit 3: Mode Fault Flag. This bit is set to logic 1 by hardware when a master mode collision is detected (nSS is low, MSTEN = 1, and SSIG = 0). If SPI interrupts are enabled, an interrupt will be generated. This bit is not automatically cleared by hardware, and must be cleared by software writing "1".

Bit 2, DBEN, Double Byte transfer Enable.

0: Disable 16-bit data transfer in QPI mode.

1: Enable 16-bit data transfer in QPI mode. The high byte data is transmitted/received in DATH at SFR address B9H.

Bit 1, QPIEN, QPI mode Enabled.

0: Set the module to SPI mode.

1: Set the module to QPI mode with quad bits data bus access, {SPID3, SPID2, SPID1(MISO), SPID0(MOSI)}.

Bit 0: SPR2, SPI clock rate select 2 (associated with SPR1 and SPR0) when QPIEN is disabled. If QPIEN mode is enabled, this bit is the In/Out control of QPI data bus, QDOE. QDOE=0 switches the QPI data bus as input mode. QDOE=1 enables the data output on QPI data bus.

SPDAT: SPI Data Register

SFR Page = 0~F

SFR Address = 0x86 RESET= 0000-0000

7	6	5	4	3	2	1	0
(MSB)							(LSB)
R/W	**R/W**	**R/W**	**R/W**	**R/W**	**R/W**	**R/W**	**R/W**

SPDAT has two physical buffers for writing to and reading from during transmit and receive, respectively.

AUXR1: Auxiliary Control Register 1

SFR Page = 0~F

SFR Address = 0xA2 RESET = 0000-0000

7	6	5	4	3	2	1	0
KBIPS1	KBIPS0	**SPIPS0**	S1PS1	S1PS0	T01PS0	EXTRAM	DPS
R/W	**R/W**	**R/W**	**R/W**	**R/W**	**R/W**	**R/W**	**R/W**

Bit 5: SPIPS0, SPI Port Selection 0.

SPIPS0	nSS	MOSI	MISO	SPICLK	SPID2	SPID3
0	P1.4	P1.5	P1.6	P1.7	P5.3	P5.4
1	P4.3	P4.2	P4.1	P4.0	P3.6	P3.7

23. Two Wire Serial Interface (TWSI and TWI1)

The Two-Wire Serial interface is a two-wire, bi-directional serial bus. It is ideally suited for typical microcontroller applications. The **MG82FG5C64** is embedded two independent hardware engine to service the Two-Wire Serial Interface, TWSI and TWI1. TWI1 is duplicated design from TWSI with fully compatible control flow except different SFR access page and different port pin. All TWSI SFRs are accessed in SFR page 1 and its interface pins are TWI_SCL and TWI_SDA. The SFRs of TWI1 are located in SFR page 2 with the two signals, TWI1_SCL and TWI1_SDA.

The TWSI protocol allows the systems designer to interconnect up to 128 different devices using only two bi-directional bus lines, one for clock (SCL) and one for data (SDA). The TWSI bus provides control of SDA (serial data, P4.1), SCL (serial clock, P4.0) generation and synchronization, arbitration logic, and START/STOP control and generation. The only external hardware needed to implement this bus is a single pull-up resistor for each of the TWSI bus lines. All devices connected to the bus have individual addresses, and mechanisms for resolving bus contention are inherent in the TWSI protocol.

Figure 23–1. TWSI Bus Interconnection

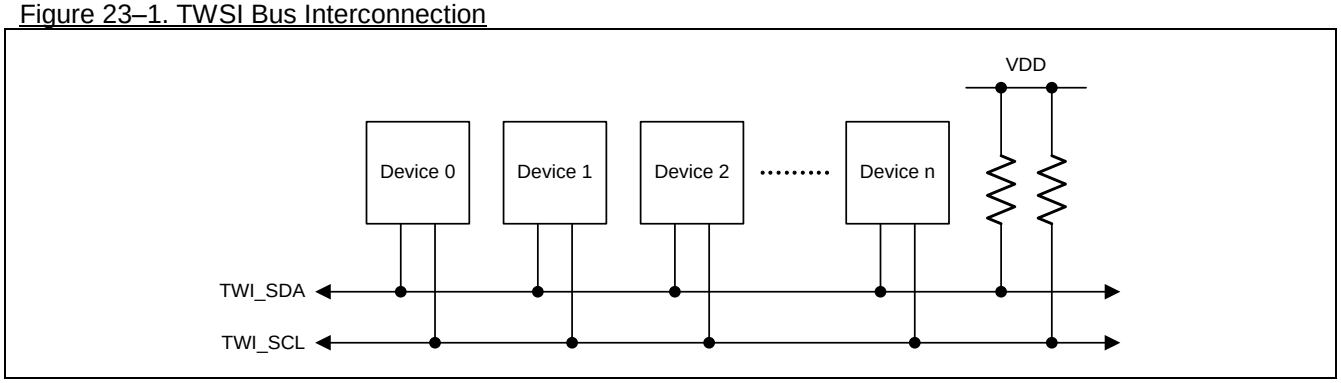

The TWSI bus may operate as a master and/or slave, and may function on a bus with multiple masters. The CPU interfaces to the TWSI through the following four special function registers: SICON configures the TWSI bus; SISTA reports the status code of the TWSI bus; and SIDAT is the data register, used for both transmitting and receiving TWSI data. SIADR is the slave address register. And, the TWSI hardware interfaces to the serial bus via two lines: SDA (serial data line, P4.1) and SCL (serial clock line, P4.0).

Figure 23–2. TWSI Block Diagram

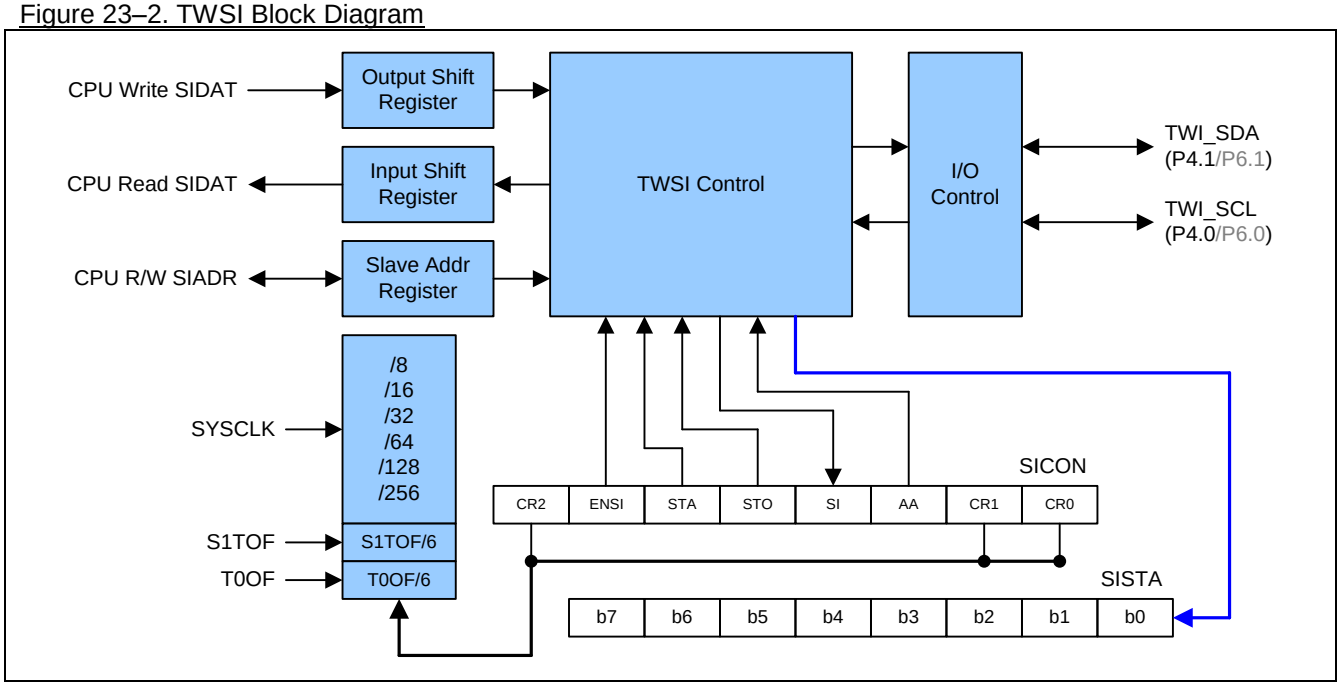

23.1. Operating Modes

There are four operating modes for the TWSI: 1) Master/Transmitter mode, 2) Master/Receiver mode, 3) Slave/Transmitter mode and 4) Slave/Receiver mode. Bits STA, STO and AA in SICON decide the next action which the TWSI hardware will take after SI is cleared by software. When the next action is completed, a new status code in SISTA will be updated and SI will be set by hardware in the same time. Now, the interrupt service routine is entered (if the TWSI interrupt is enabled), and the new status code can be used to determine which appropriate routine the software is to branch to.

23.1.1. Master Transmitter Mode

In the master transmitter mode, a number of data bytes are transmitted to a slave receiver. Before the master transmitter mode can be entered, SICON must be initialized as follows:

SICON

7	6	5	4	3	2	1	0
CR2	ENSI	STA	STO	SI	AA	CR1	CR0
Bit rate	1	0	0	0	x	Bit rate	

CR0, CR1, and CR2 define the serial bit rate. ENSI must be set to logic 1 to enable TWSI. If the AA bit is reset, TWSI will not acknowledge its own slave address or the general call address in the event of another device becoming master of the bus. In other words, if AA is reset, TWSI cannot enter a slave mode. STA, STO, and SI must be reset.

The master transmitter mode may now be entered by software setting the STA bit. The TWSI logic will now test the serial bus and generate a START condition as soon as the bus becomes free. When a START condition is transmitted, the serial interrupt flag (SI) is set, and the status code in the status register (SISTA) will be 08H. This status code must be used to vector to an interrupt service routine that loads SIDAT with the slave address and the data direction bit (SLA+W). The SI bit in SICON must then be reset before the serial transfer can continue.

When the slave address and the direction bit have been transmitted and an acknowledgment bit has been received, the serial interrupt flag (SI) is set again, and a number of status codes in SISTA are possible. There are 18H, 20H, or 38H for the master mode and also 68H, 78H, or B0H if the slave mode was enabled (AA=1). The appropriate action to be taken for each of these status codes is detailed in the following operating flow chart. After a repeated START condition (state 10H), TWSI may switch to the master receiver mode by loading SIDAT with SLA+R.

23.1.2. Master Receiver Mode

In the master receiver mode, a number of data bytes are received from a slave transmitter. SICON must be initialized as in the master transmitter mode. When the start condition has been transmitted, the interrupt service routine must load SIDAT with the 7-bit slave address and the data direction bit (SLA+R). The SI bit in SICON must then be cleared before the serial transfer can continue.

When the slave address and the data direction bit have been transmitted and an acknowledgment bit has been received, the serial interrupt flag (SI) is set again, and a number of status codes in SISTA are possible. They are 40H, 48H, or 38H for the master mode and also 68H, 78H, or B0H if the slave mode was enabled (AA=1). The appropriate action to be taken for each of these status codes is detailed in the following operating flow chart. After a repeated start condition (state 10H), TWSI may switch to the master transmitter mode by loading SIDAT with SLA+W.

23.1.3. Slave Transmitter Mode

In the slave transmitter mode, a number of data bytes are transmitted to a master receiver. To initiate the slave transmitter mode, SIADR and SICON must be loaded as follows:

SIADR

7	6	5	4	3	2	1	0
X	X	X	X	X	X	X	GC

|<---------- Own Slave Address ---------->|

The upper 7 bits are the address to which TWSI will respond when addressed by a master. If the LSB (GC) is set, TWSI will respond to the general call address (00H); otherwise it ignores the general call address.

SICON

7	6	5	4	3	2	1	0
CR2	ENSI	STA	STO	SI	AA	CR1	CR0
x	1	0	0	0	1	x	x

CR0, CR1, and CR2 do not affect TWSI in the slave mode. ENSI must be set to “1” to enable TWSI. The AA bit must be set to enable TWSI to acknowledge its own slave address or the general call address. STA, STO, and SI must be cleared to “0”.

When SIADR and SICON have been initialized, TWSI waits until it is addressed by its own slave address followed by the data direction bit which must be “1” (R) for TWSI to operate in the slave transmitter mode. After its own slave address and the “R” bit have been received, the serial interrupt flag (SI) is set and a valid status code can be read from SISTA. This status code is used to vector to an interrupt service routine, and the appropriate action to be taken for each of these status codes is detailed in the following operating flow chart. The slave transmitter mode may also be entered if arbitration is lost while TWSI is in the master mode (see state B0H).

If the AA bit is reset during a transfer, TWSI will transmit the last byte of the transfer and enter state C0H or C8H. TWSI is switched to the not-addressed slave mode and will ignore the master receiver if it continues the transfer. Thus the master receiver receives all 1s as serial data. While AA is reset, TWSI does not respond to its own slave address or a general call address. However, the serial bus is still monitored, and address recognition may be resumed at any time by setting AA. This means that the AA bit may be used to temporarily isolate TWSI from the bus.

23.1.4. Slave Receiver Mode

In the slave receiver mode, a number of data bytes are received from a master transmitter. Data transfer is initialized as in the slave transmitter mode.

When SIADR and SICON have been initialized, TWSI waits until it is addressed by its own slave address followed by the data direction bit which must be “0” (W) for TWSI to operate in the slave receiver mode. After its own slave address and the W bit have been received, the serial interrupt flag (SI) is set and a valid status code can be read from SISTA. This status code is used to vector to an interrupt service routine, and the appropriate action to be taken for each of these status codes is detailed in the following operating flow chart. The slave receiver mode may also be entered if arbitration is lost while TWSI is in the master mode (see status 68H and 78H).

If the AA bit is reset during a transfer, TWSI will return a not acknowledge (logic 1) to SDA after the next received data byte. While AA is reset, TWSI does not respond to its own slave address or a general call address. However, the serial bus is still monitored and address recognition may be resumed at any time by setting AA. This means that the AA bit may be used to temporarily isolate from the bus.

23.2. Miscellaneous States

There are two SISTA codes that do not correspond to a defined TWSI hardware state, as described below.

S1STA = F8H:
This status code indicates that no relevant information is available because the serial interrupt flag, SI, is not yet set. This occurs between other states and when TWSI is not involved in a serial transfer.

S1STA = 00H:
This status code indicates that a bus error has occurred during an TWSI serial transfer. A bus error is caused when a START or STOP condition occurs at an illegal position in the format frame. Examples of such illegal positions are during the serial transfer of an address byte, a data byte, or an acknowledge bit. A bus error may also be caused when external interference disturbs the internal TWSI signals. When a bus error occurs, SI is set. To recover from a bus error, the STO flag must be set and SI must be cleared by software. This causes TWSI to enter the “not-addressed” slave mode (a defined state) and to clear the STO flag (no other bits in SICON are affected). The SDA and SCL lines are released (a STOP condition is not transmitted).

23.3. Using the TWSI

The TWSI is byte-oriented and interrupt based. Interrupts are issued after all bus events, like reception of a byte or transmission of a START condition. Because the TWSI is interrupt-based, the application software is free to carry on other operations during a TWSI byte transfer. Note that the TWSI interrupt enable bit ETWSI bit (AUXIE.6) together with the EA bit allow the application to decide whether or not assertion of the SI Flag should generate an interrupt request. When the SI flag is asserted, the TWSI has finished an operation and awaits application response. In this case, the status register SISTA contains a status code indicating the current state of the TWSI bus. The application software can then decide how the TWSI should behave in the next TWSI bus operation by properly programming the STA, STO and AA bits (in SICON).

The following operating flow charts will instruct the user to use the TWSI using state-by-state operation. First, the user should fill SIADR with its own Slave address (refer to the previous description about SIADR). To act as a master, after initializing the SICON, the first step is to set “STA” bit to generate a START condition to the bus. To act as a slave, after initializing the SICON, the TWSI waits until it is addressed. And then follow the operating flow chart for a number a next actions by properly programming (STA,STO,SI,AA) in the SICON. Since the TWSI hardware will take next action when SI is just cleared, it is recommended to program (STA,STO,SI,AA) by two steps, first STA, STO and AA, then clear SI bit (may use instruction “CLR SI”) for safe operation. “don’t care”

The figure below shows how to read the flow charts.

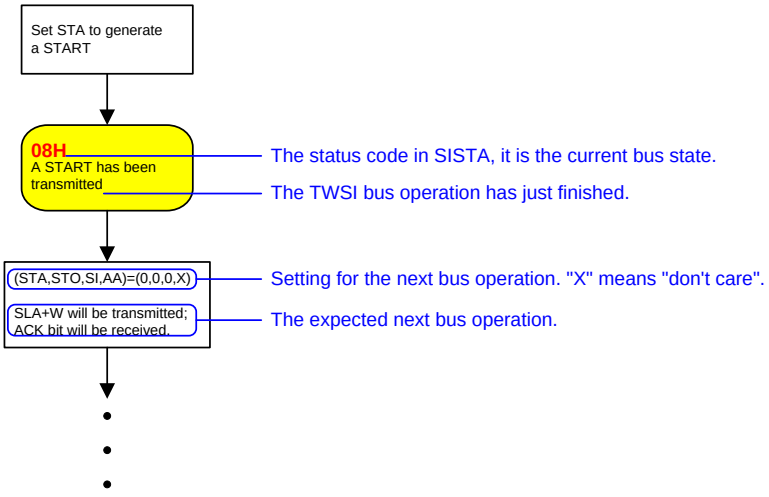

(1) Master/Transmitter Mode

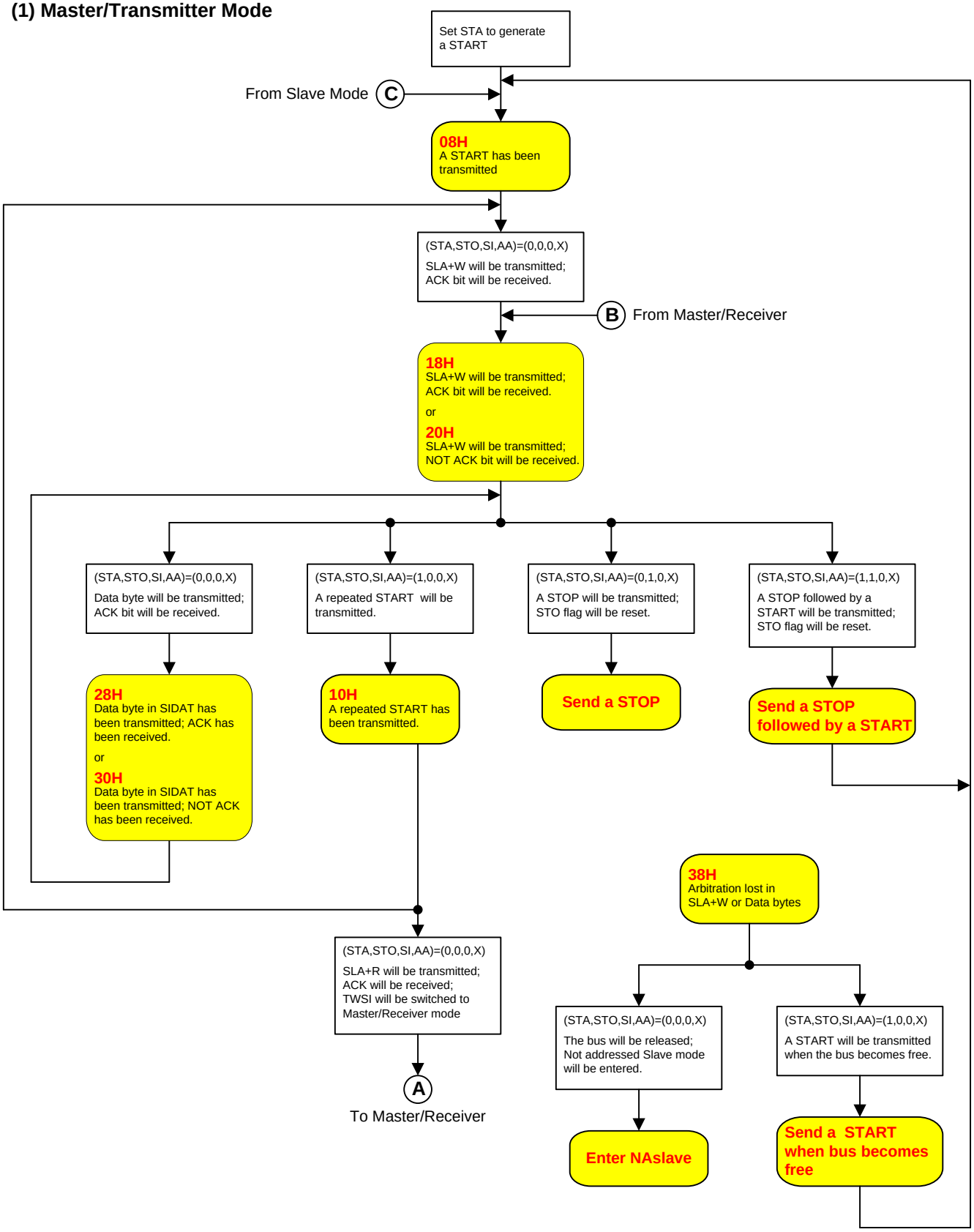

(2) Master/Receiver Mode

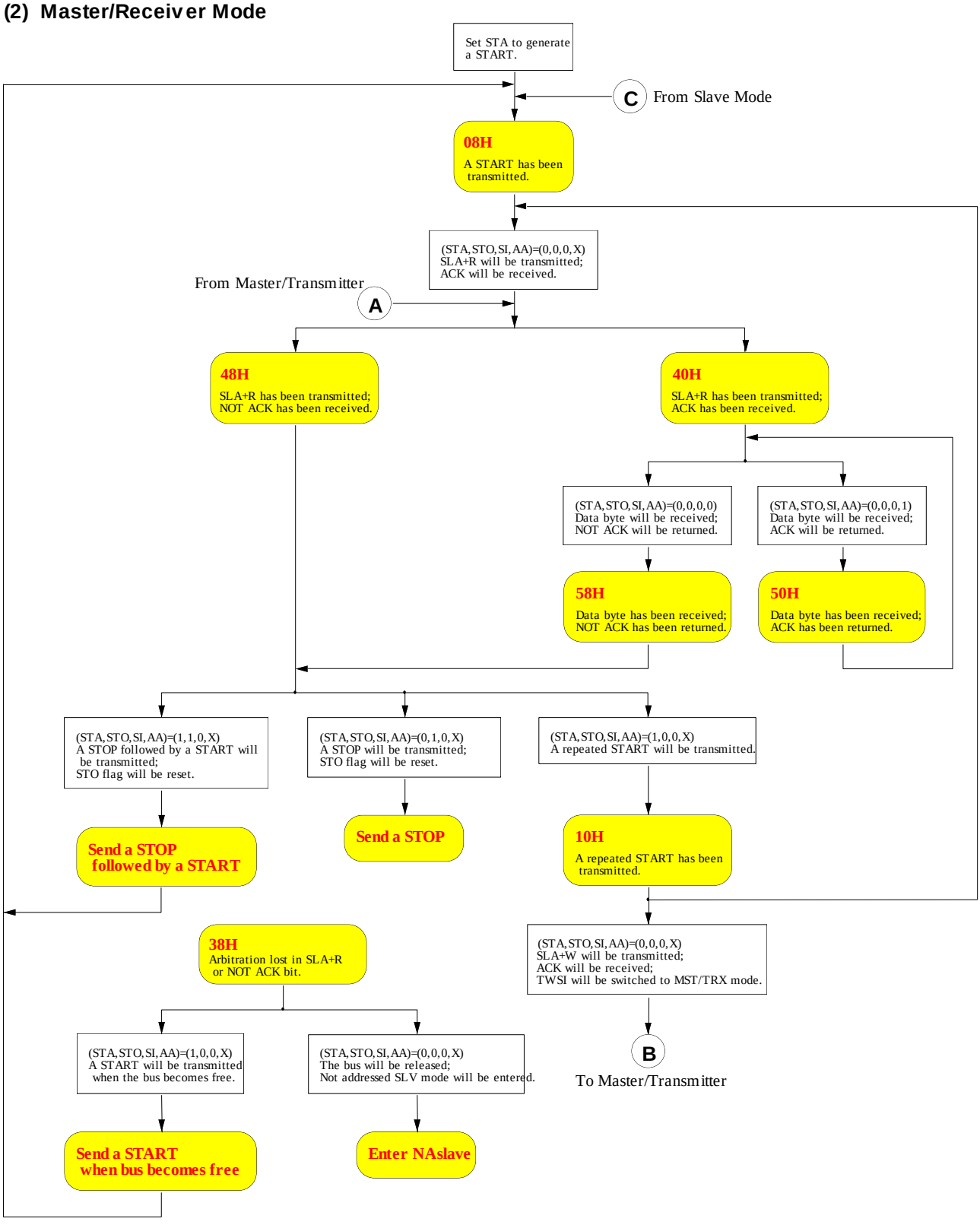

(3) Slave/Transmitter Mode

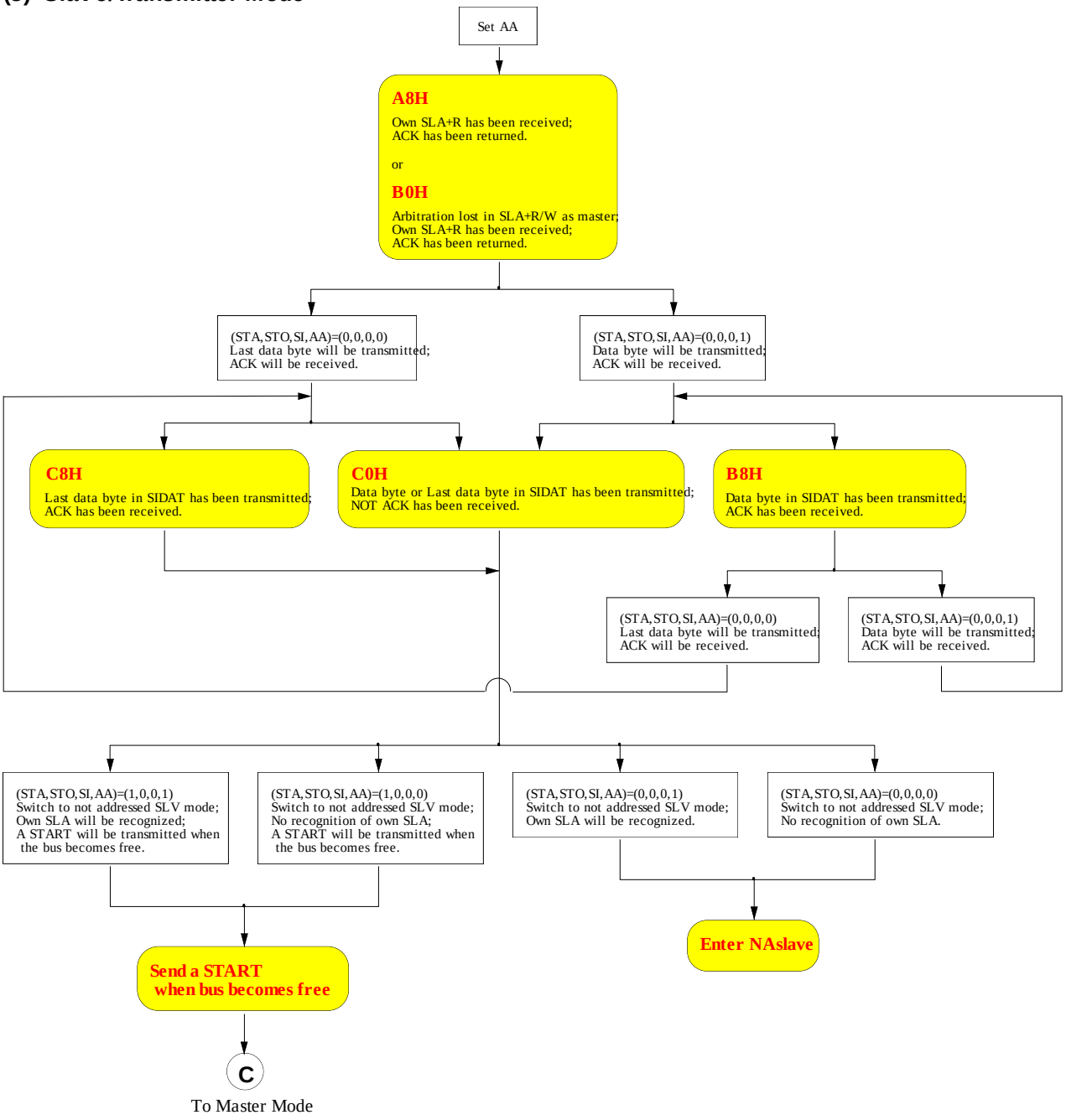

(4) Slave/Receiver Mode

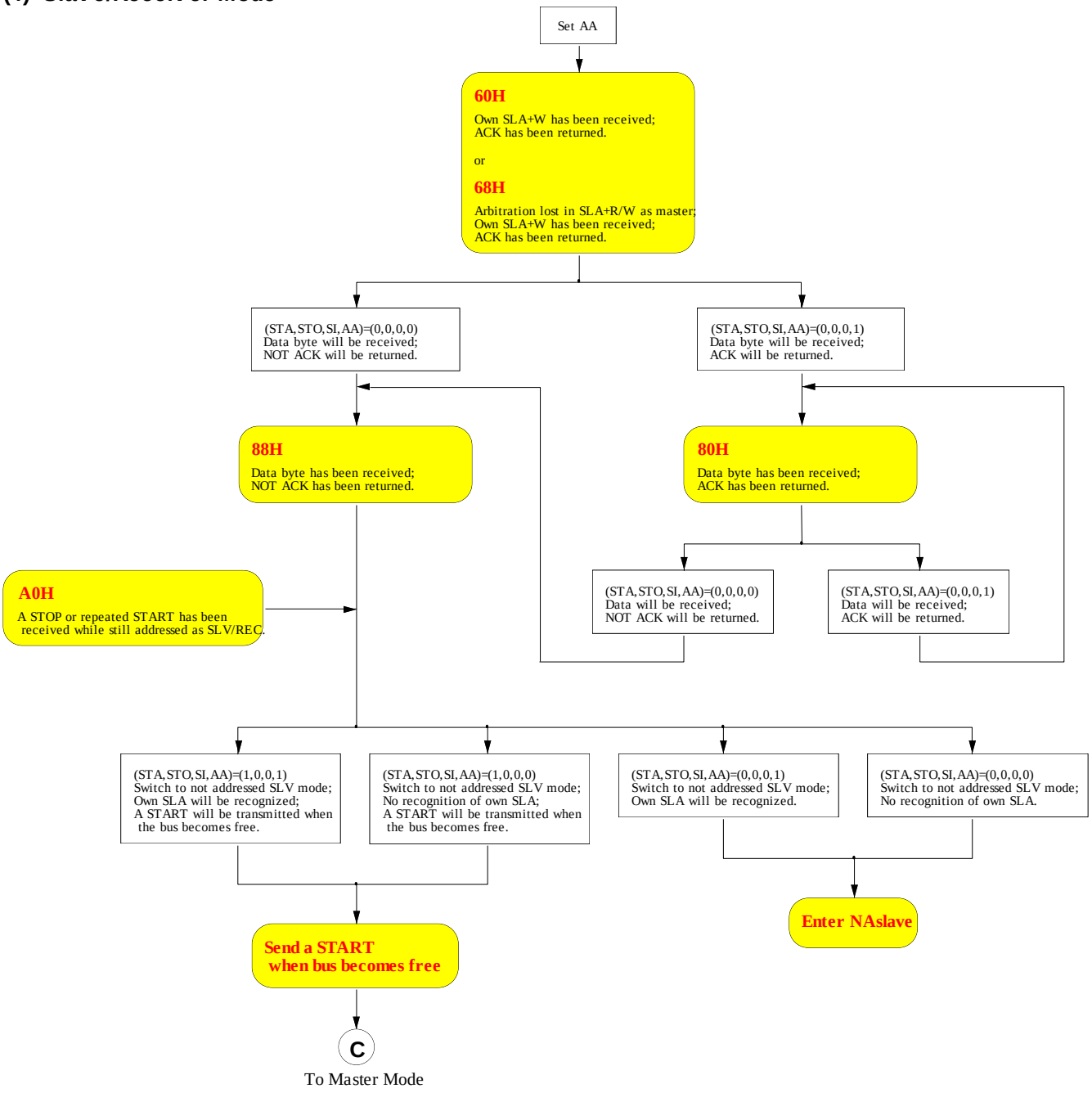

(5) Slave/Receiver Mode (For General Call)

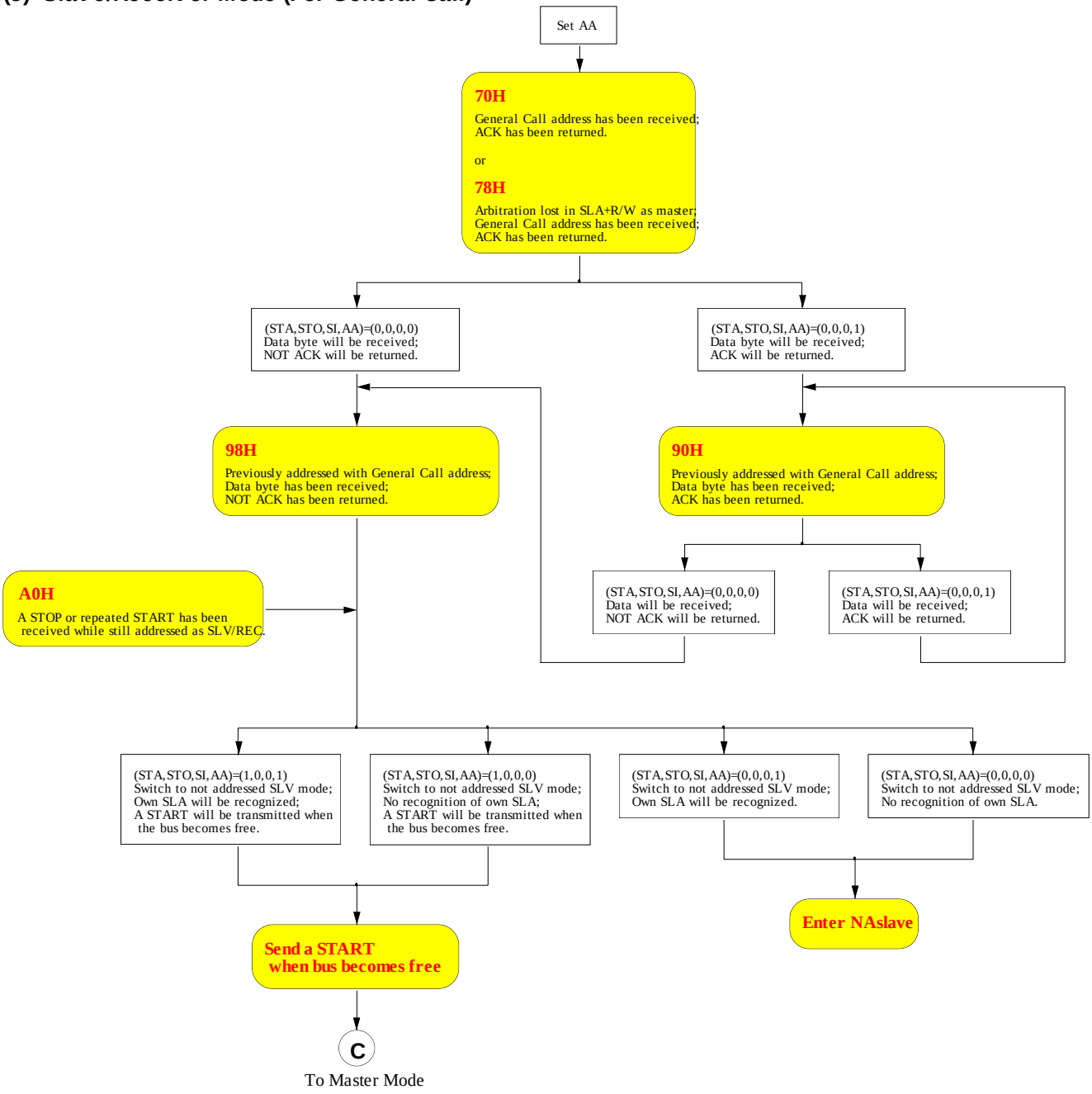

23.4. TWSI Register

SIADR: 2-wire Serial Interface Address Register

SFR Page = **0 only**

SFR Address = 0xD1 RESET= 0000-0000

7	6	5	4	3	2	1	0
A6	A5	A4	A3	A2	A1	A0	GC
R/W	**R/W**	**R/W**	**R/W**	**R/W**	**R/W**	**R/W**	**R/W**

The CPU can read from and write to this register directly. SIADR is not affected by the TWSI hardware. The contents of this register are irrelevant when TWSI is in a master mode. In the slave mode, the seven most significant bits must be loaded with the microcontroller's own slave address, and, if the least significant bit (GC) is set, the general call address (00H) is recognized; otherwise it is ignored. The most significant bit corresponds to the first bit received from the TWSI bus after a START condition.

SIDAT: 2-wire Serial Interface Data Register

SFR Page = **0 only**

SFR Address = 0xD2 RESET= 0000-0000

7	6	5	4	3	2	1	0
D7	D6	D5	D4	D3	D2	D1	D0
R/W	**R/W**	**R/W**	**R/W**	**R/W**	**R/W**	**R/W**	**R/W**

This register contains a byte of serial data to be transmitted or a byte which has just been received. The CPU can read from or write to this register directly while it is not in the process of shifting a byte. This occurs when TWSI is in a defined state and the serial interrupt flag (SI) is set. Data in SIDAT remains stable as long as SI is set. While data is being shifted out, data on the bus is simultaneously being shifted in; SIDAT always contains the last data byte present on the bus. Thus, in the event of lost arbitration, the transition from master transmitter to slave receiver is made with the correct data in SIDAT.

SIDAT and the ACK flag form a 9-bit shift register which shifts in or shifts out an 8-bit byte, followed by an acknowledge bit. The ACK flag is controlled by the TWSI hardware and cannot be accessed by the CPU. Serial data is shifted through the ACK flag into SIDAT on the rising edges of serial clock pulses on the TWI_SCL line. When a byte has been shifted into SIDAT, the serial data is available in SIDAT, and the acknowledge bit is returned by the control logic during the 9th clock pulse. Serial data is shifted out from SIDAT on the falling edges of clock pulses on the TWI_SCL line.

When the CPU writes to SIDAT, the bit SD7 is the first bit to be transmitted to the SDA line. After nine serial clock pulses, the eight bits in SIDAT will have been transmitted to the SDA line, and the acknowledge bit will be present in the ACK flag. Note that the eight transmitted bits are shifted back into SIDAT.

SICON: 2-wire Serial Interface Control Register

SFR Page = **0 only**

SFR Address = 0xD4 RESET= 0000-0000

7	6	5	4	3	2	1	0
CR2	ENSI	STA	STO	SI	AA	CR1	CR0
R/W	**R/W**	**R/W**	**R/W**	**R/W**	**R/W**	**R/W**	**R/W**

The CPU can read from and write to this register directly. Two bits are affected by the TWSI hardware: the SI bit is set when a serial interrupt is requested, and the STO bit is cleared when a STOP condition is present on the bus. The STO bit is also cleared when ENSI="0".

Bit 7: CR2, TWSI Clock Rate select bit 2 (associated with CR1 and CR0).

Bit 6: ENSI, the TWSI Hardware Enable Bit
When ENSI is "0", the TWI_SDA and TWI_SCL outputs are in a high impedance state. TWI_SDA and TWI_SCL input signals are ignored, TWSI is in the not-addressed slave state, and STO bit in SICON is forced to "0". No other bits are affected, and, TWI_SDA and TWI_SCL assigned port pins may be used as general purpose I/O pins. When ENSI is "1", TWSI is enabled, and, the TWI_SDA and TWI_SCL assigned port pin latches, such as

P4.1 and P4.0, must be set to logic 1 and I/O mode must be configured to open-drain mode for the following serial communication.

Bit 5: STA, the START Flag
When the STA bit is set to enter a master mode, the TWSI hardware checks the status of the serial bus and generates a START condition if the bus is free. If the bus is not free, then TWSI waits for a STOP condition and generates a START condition after a delay. If STA is set while TWSI is already in a master mode and one or more bytes are transmitted or received, TWSI transmits a repeated START condition. STA may be set at any time. STA may also be set when TWSI is an addressed slave. When the STA bit is reset, no START condition or repeated START condition will be generated.

Bit 4: STO, the STOP Flag
When the STO bit is set while TWSI is in a master mode, a STOP condition is transmitted to the serial bus. When the STOP condition is detected on the bus, the TWSI hardware clears the STO flag. In a slave mode, the STO flag may be set to recover from a bus error condition. In this case, no STOP condition is transmitted to the bus. However, the TWSI hardware behaves as if a STOP condition has been received and switches to the defined not addressed slave receiver mode. The STO flag is automatically cleared by hardware. If the STA and STO bits are both set, then a STOP condition is transmitted to the bus if TWSI is in a master mode (in a slave mode, TWSI generates an internal STOP condition which is not transmitted), and then transmits a START condition.

Bit 3: SI, the Serial Interrupt Flag
When a new TWSI state is present in the SISTA register, the SI flag is set by hardware. And, if the TWSI interrupt is enabled, an interrupt service routine will be serviced. The only state that does not cause SI to be set is state F8H, which indicates that no relevant state information is available. When SI is set, the low period of the serial clock on the TWI_SCL line is stretched, and the serial transfer is suspended. A high level on the TWI_SCL line is unaffected by the serial interrupt flag. SI must be cleared by software writing “0” on this bit. When the SI flag is reset, no serial interrupt is requested, and there is no stretching on the serial clock on the TWI_SCL line.

Bit 2: AA, the Assert Acknowledge Flag
If the AA flag is set to “1”, an acknowledge (low level to TWI_SDA) will be returned during the acknowledge clock pulse on the TWI_SCL line when:
1) The own slave address has been received.
2) A data byte has been received while TWSI is in the master/receiver mode.
3) A data byte has been received while TWSI is in the addressed slave/receiver mode.

If the AA flag is reset to “0”, a not acknowledge (high level to TWI_SDA) will be returned during the acknowledge clock pulse on TWI_SCL when:
1) A data has been received while TWSI is in the master/receiver mode.
2) A data byte has been received while TWSI is in the addressed slave/receiver mode.

Bit 7, 1~0: CR2, CR1 and CR0, the Clock Rate select Bits
These three bits determine the serial clock frequency when TWSI is in a master mode. The clock rate is not important when TWSI is in a slave mode because TWSI will automatically synchronize with any clock frequency, which is from a master, up to 100KHz. The various serial clock rates are shown in Table 23–1.

Table 23–1. TWSI Serial Clock Rates

CR2	CR1	CR0	TWSI Clock Selection	TWSI Clock Rate @ SYSCLK=12MHz
0	0	0	SYSCLK/8	1.5 MHz
0	0	1	SYSCLK/16	750 KHz
0	1	0	SYSCLK/32	375 KHz
0	1	1	SYSCLK/64	187.5 KHz
1	0	0	SYSCLK/128	93.75 KHz
1	0	1	SYSCLK/256	46.875 KHz
1	1	0	**S1TOF/6**	Variable
1	1	1	**T0OF/6**	Variable

Note:

1. SYSCLK is the system clock.

2. S1TOF is UART1 Baud-Rate Generator Overflow.
3. T0OF is Timer 0 Overflow.

SISTA: 2-wire Serial Interface Status Register

SFR Page = **0 only**
SFR Address = 0xD3 RESET= 1111-1000

7	6	5	4	3	2	1	0
SIS7	SIS6	SIS5	SIS4	SIS3	SIS2	SIS1	SIS0
R	**R**	**R**	**R**	**R**	**R**	**R**	**R**

SISTA is an 8-bit read-only register. The three least significant bits are always 0. The five most significant bits contain the status code. There are a number of possible status codes. When SISTA contains F8H, no serial interrupt is requested. All other SISTA values correspond to defined TWSI states. When each of these states is entered, a status interrupt is requested (SI=1). A valid status code is present in SISTA when SI is set by hardware.

In addition, state 00H stands for a Bus Error. A Bus Error occurs when a START or STOP condition is present at an illegal position, such as inside an address/data byte or just on an acknowledge bit.

AUXR3: Auxiliary Register 3

SFR Page = **0 only**
SFR Address = 0xA4 RESET = 0000-0000

7	6	5	4	3	2	1	0
STAF	STOF	BPOC1	BPOC0	ALEPS0	TWIPS1	TWIPS0	T2PS0
R/W	**R/W**	**R/W**	**R/W**	**R/W**	**R/W**	**R/W**	**R/W**

Bit 2~1: TWIPS1~0, TWSI Port Selection [1:0].

TWIPS1~0	TWI_SCL	TWI_SDA
00	P4.0	P4.1
01	P6.0	P6.1
10	P3.0	P3.1
11	P3.4	P3.5

23.5. TWI1 Register

SI1ADR: 2-wire Serial Interface 1 Address Register

SFR Page = **1 only**

SFR Address = 0xD1 RESET= 0000-0000

7	6	5	4	3	2	1	0
A61	A51	A41	A31	A21	A11	A01	GC1
R/W	**R/W**	**R/W**	**R/W**	**R/W**	**R/W**	**R/W**	**R/W**

The CPU can read from and write to this register directly. SI1ADR is not affected by the TWI1 hardware. The contents of this register are irrelevant when TWI1 is in a master mode. In the slave mode, the seven most significant bits must be loaded with the microcontroller's own slave address, and, if the least significant bit (GC1) is set, the general call address (00H) is recognized; otherwise it is ignored. The most significant bit corresponds to the first bit received from the TWI1 bus after a START condition.

SI1DAT: 2-wire Serial Interface 1 Data Register

SFR Page = **1 only**

SFR Address = 0xD2 RESET= 0000-0000

7	6	5	4	3	2	1	0
D71	D61	D51	D41	D31	D21	D11	D01
R/W	**R/W**	**R/W**	**R/W**	**R/W**	**R/W**	**R/W**	**R/W**

This register contains a byte of serial data to be transmitted or a byte which has just been received. The CPU can read from or write to this register directly while it is not in the process of shifting a byte. This occurs when TWSI is in a defined state and the serial interrupt flag (SI1) is set. Data in SI1DAT remains stable as long as SI1 is set. While data is being shifted out, data on the bus is simultaneously being shifted in; SI1DAT always contains the last data byte present on the bus. Thus, in the event of lost arbitration, the transition from master transmitter to slave receiver is made with the correct data in S1IDAT.

SI1DAT and the ACK flag form a 9-bit shift register which shifts in or shifts out an 8-bit byte, followed by an acknowledge bit. The ACK flag is controlled by the TWI1 hardware and cannot be accessed by the CPU. Serial data is shifted through the ACK flag into SI1DAT on the rising edges of serial clock pulses on the TWI1_SCL line. When a byte has been shifted into SI1DAT, the serial data is available in SI1DAT, and the acknowledge bit is returned by the control logic during the 9th clock pulse. Serial data is shifted out from SI1DAT on the falling edges of clock pulses on the TWI1_SCL line.

When the CPU writes to SI1DAT, the bit D71 is the first bit to be transmitted to the TWI1_SDA line. After nine serial clock pulses, the eight bits in SI1DAT will have been transmitted to the TWI1_SDA line, and the acknowledge bit will be present in the ACK flag. Note that the eight transmitted bits are shifted back into SI1DAT.

SI1CON: 2-wire Serial Interface 1 Control Register

SFR Page = **1 only**

SFR Address = 0xD4 RESET= 0000-0000

7	6	5	4	3	2	1	0
CR21	ENSI1	STA1	STO1	SI1	AA1	CR11	CR01
R/W	**R/W**	**R/W**	**R/W**	**R/W**	**R/W**	**R/W**	**R/W**

The CPU can read from and write to this register directly. Two bits are affected by the TWI1 hardware: the SI1 bit is set when a serial interrupt is requested, and the STO1 bit is cleared when a STOP condition is present on the bus. The STO1 bit is also cleared when ENSI1="0".

Bit 7: CR21, TWI1 Clock Rate select bit 2 (associated with CR11 and CR01).

Bit 6: ENSI1, the TWI1 Hardware Enable Bit
When ENSI1 is "0", the TWI1_SDA and TWI1_SCL outputs are in a high impedance state. TWI1_SDA and TWI1_SCL input signals are ignored, TWI1 is in the not-addressed slave state, and STO1 bit in SI1CON is forced to "0". No other bits are affected, and, P1.1 (TWI1_SDA) and P1.0 (TWI1_SCL) may be used as general purpose I/O pins. When ENSI1 is "1", TWI1 is enabled, and, the P1.1 and P1.0 port latches must be set to logic 1 and I/O mode must be configured to open-drain mode for the following serial communication.

Bit 5: STA1, the START Flag
When the STA1 bit is set to enter a master mode, the TWI1 hardware checks the status of the serial bus and generates a START condition if the bus is free. If the bus is not free, then TWI1 waits for a STOP condition and generates a START condition after a delay. If STA1 is set while TWI1 is already in a master mode and one or more bytes are transmitted or received, TWI1 transmits a repeated START condition. STA1 may be set at any time. STA1 may also be set when TWI1 is an addressed slave. When the STA1 bit is reset, no START condition or repeated START condition will be generated.

Bit 4: STO1, the STOP Flag
When the STO1 bit is set while TWI1 is in a master mode, a STOP condition is transmitted to the serial bus. When the STOP condition is detected on the bus, the TWI1 hardware clears the STO1 flag. In a slave mode, the STO1 flag may be set to recover from a bus error condition. In this case, no STOP condition is transmitted to the bus. However, the TWI1 hardware behaves as if a STOP condition has been received and switches to the defined not addressed slave receiver mode. The STO1 flag is automatically cleared by hardware. If the STA1 and STO1 bits are both set, then a STOP condition is transmitted to the bus if TWI1 is in a master mode (in a slave mode, TWI1 generates an internal STOP condition which is not transmitted), and then transmits a START condition.

Bit 3: SI1, the Serial interface 1 Interrupt Flag
When a new TWI1 state is present in the SI1STA register, the SI1 flag is set by hardware. And, if the TWI1 interrupt is enabled, an interrupt service routine will be serviced. The only state that does not cause SI to be set is state F8H, which indicates that no relevant state information is available. When SI1 is set, the low period of the serial clock on the TWI1_SCL line is stretched, and the serial transfer is suspended. A high level on the TWI1_SCL line is unaffected by the serial interrupt flag. SI1 must be cleared by software writing “0” on this bit. When the SI1 flag is reset, no serial interrupt is requested, and there is no stretching on the serial clock on the TWI1_SCL line.

Bit 2: AA1, the Assert Acknowledge Flag
If the AA1 flag is set to “1”, an acknowledge (low level to TWI1_SDA) will be returned during the acknowledge clock pulse on the TWI1_SCL line when:
1) The own slave address has been received.
2) A data byte has been received while TWI1 is in the master/receiver mode.
3) A data byte has been received while TWI1 is in the addressed slave/receiver mode.

If the AA1 flag is reset to “0”, a not acknowledge (high level to TWI1_SDA) will be returned during the acknowledge clock pulse on TWI1_SCL when:
1) A data has been received while TWI1 is in the master/receiver mode.
2) A data byte has been received while TWI1 is in the addressed slave/receiver mode.

Bit 7, 1~0: CR21, CR11 and CR01, the Clock Rate select Bits
These three bits determine the serial clock frequency when TWI1 is in a master mode. The clock rate is not important when TWI1 is in a slave mode because TWI1 will automatically synchronize with any clock frequency, which is from a master, up to 100KHz. The various serial clock rates are shown in Table 23–1.

Table 23–2. TWI1 Serial Clock Rates

CR21	CR11	CR01	TWSI Clock Selection	TWI1 Clock Rate @ SYSCLK=12MHz
0	0	0	SYSCLK/8	1.5 MHz
0	0	1	SYSCLK/16	750 KHz
0	1	0	SYSCLK/32	375 KHz
0	1	1	SYSCLK/64	187.5 KHz
1	0	0	SYSCLK/128	93.75 KHz
1	0	1	SYSCLK/256	46.875 KHz
1	1	0	**S1TOF/6**	Variable
1	1	1	**T0OF/6**	Variable

Note:

1. SYSCLK is the system clock.
2. S1TOF is UART1 Baud-Rate Generator Overflow.
3. T0OF is Timer 0 Overflow.

SI1STA: 2-wire Serial Interface 1 Status Register

SFR Page = **1 only**
SFR Address = 0xD3 RESET= 1111-1000

7	6	5	4	3	2	1	0
SIS71	SIS61	SIS51	SIS41	SIS31	SIS21	SIS11	SIS01
R	**R**	**R**	**R**	**R**	**R**	**R**	**R**

SI1STA is an 8-bit read-only register. The three least significant bits are always 0. The five most significant bits contain the status code. There are a number of possible status codes. When SI1STA contains F8H, no serial interrupt is requested. All other SI1STA values correspond to defined TWI1 states. When each of these states is entered, a status interrupt is requested (SI1=1). A valid status code is present in SI1STA when S1 is set by hardware.

In addition, state 00H stands for a Bus Error. A Bus Error occurs when a START or STOP condition is present at an illegal position, such as inside an address/data byte or just on an acknowledge bit.

AUXR6: Auxiliary Register 6

SFR Page = **3 only**
SFR Address = 0xA4 RESET = 0000-0000

7	6	5	4	3	2	1	0
--	--	TWI1PS1	TWI1PS0	C1IC4S0	C1PS0	PCAPS0	S1PS2
R/W	**R/W**	**R/W**	**R/W**	**R/W**	**R/W**	**R/W**	**R/W**

Bit 5~4: TWI1PS1~0, TWI1 Port Selection [1:0].

TWI1PS1~0	TWI1_SCL	TWI1_SDA
00	P4.2	P4.3
01	P6.2	P6.3
10	P3.2	P3.3
11	P0.3	P0.4

24. Serial Interface Detection (SID/STWI)

The serial interface detection module is always monitoring the “Start” and “Stop” condition on software two-wire-interface (STWI). STWI_SCL is the serial clock signal and STWI_SDA is the serial data signal. If any matched condition is detected, hardware set the flag on STAF and STOF. Software can poll these two flags or set SIDFIE (SFIE.7) to share the interrupt vector on System Flag. And STWI_SCL is located on nINT1 which helps MCU to strobe the serial data by nINT1 interrupt. Software can use these resources to implement a variable TWI slave device.

24.1. SID (STWI) Structure

Figure 24–1 shows the configuration of STAF and STOF detection, interrupt architecture and event detecting waveform.

Figure 24–1. Serial Interface Detection structure

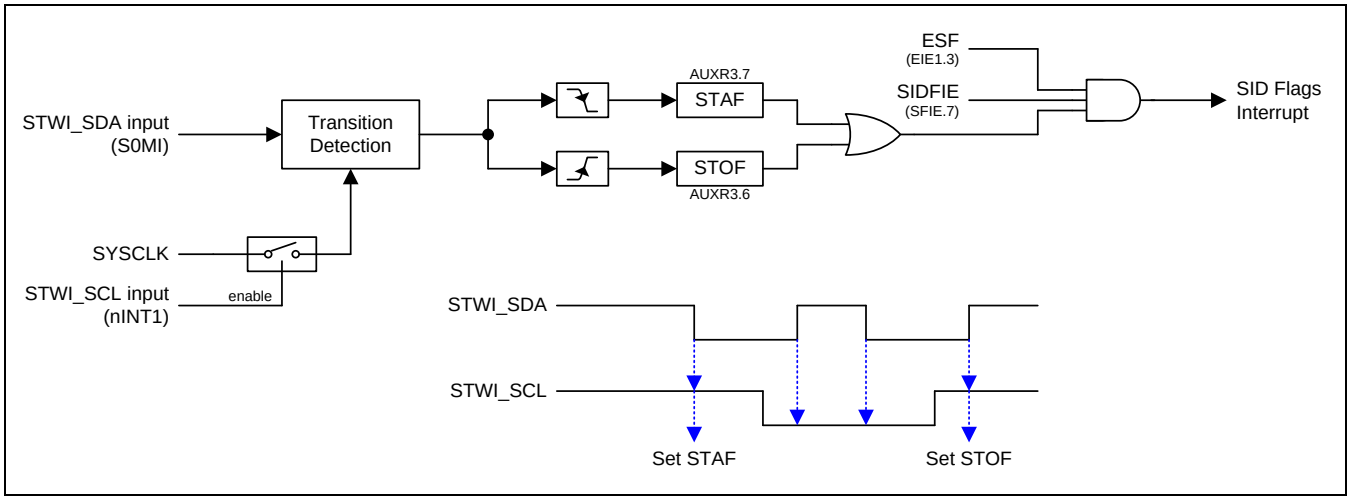

24.2. SID Register

AUXR3: Auxiliary Register 3

SFR Page = 0 only

SFR Address = 0xA4 RESET = 0000-0000

7	6	5	4	3	2	1	0
STAF	**STOF**	BPOC1	BPOC0	ALEPS0	TWIPS1	TWIPS0	T2PS0
R/W	**R/W**	**R/W**	**R/W**	**R/W**	**R/W**	**R/W**	**R/W**

Bit 7: STAF, Start Flag detection of TWI2.
0: Clear by firmware by writing “0” on it.
1: Set by hardware to indicate the START condition occurred on TWI2 bus.

Bit 6: STOF, Stop Flag detection of TWI2.
0: Clear by firmware by writing “0” on it.
1: Set by hardware to indicate the START condition occurred on TWI2 bus.

SFIE: System Flag Interrupt Enable Register

SFR Page = 0~F

SFR Address = 0x8E RESET = 0110-X000

7	6	5	4	3	2	1	0
SIDFIE	MCDRE	MCDFIE	RTCFIE	--	BOF1IE	BOF0IE	WDTFIE
R/W	**R/W**	**R/W**	**R/W**	**W**	**R/W**	**R/W**	**R/W**

Bit 7: SIDFIE, Serial Interface Detection Flag Interrupt Enabled.
0: Disable SID Flags (STAF or STOF) interrupt.
1: Enable SID Flags (STAF or STOF) interrupt.

24.3. SID Sample Code

25. Beeper

The beeper function outputs a signal on the BEEP pin for sound generation. The signal is in the range about 1, 2 or 4 kHz which is divided from ILRCO. Figure 25–1 shows the beeper generator circuit. But ILRCO is not the precision clock source. Please refer Section "34.5 ILRCO Characteristics" for more detailed ILRCO frequency deviation range.

Figure 25–1. Beeper Generator

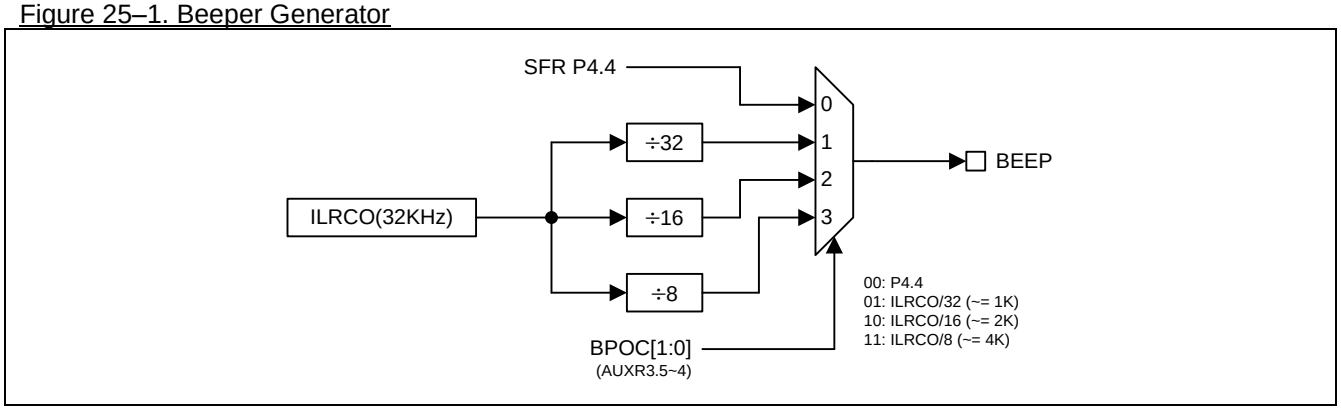

25.1. Beeper Register

AUXR3: Auxiliary Register 3

SFR Page = 0 only

SFR Address = 0xA4 RESET = 0000-0000

7	6	5	4	3	2	1	0
STAF	STOF	**BPOC1**	**BPOC0**	ALEPS0	TWIPS1	TWIPS0	T2PS0
R/W	**R/W**	**R/W**	**R/W**	**R/W**	**R/W**	**R/W**	**R/W**

Bit 5~4: BPOC1~0, Beeper output control bits.

BPOC[1:0]	P4.4 function	I/O mode
00	P4.4	By P4M0.4
01	ILRCO/64	By P4M0.4
10	ILRCO/32	By P4M0.4
11	ILRCO/16	By P4M0.4

For beeper on P4.4 function, it is recommended to set P4M0.4 to "1" which selects P4.4 as push-push output mode.

25.2. Beeper Sample Code

26. Keypad Interrupt (KBI)

The Keypad Interrupt function is intended primarily to allow a single interrupt to be generated when KBI.7~0 is equal to or not equal to a certain pattern. This function can be used for bus address recognition or keypad recognition.

There are three SFRs used for this function. The Keypad Interrupt Mask Register (KBMASK) is used to define which input pins connected to Port 2 are enabled to trigger the interrupt. The Keypad Pattern Register (KBPATN) is used to define a pattern that is compared to the value of keypad input. The Keypad Interrupt Flag (KBIF) in the Keypad Interrupt Control Register (KBCON) is set by hardware when the condition is matched. An interrupt will be generated if it has been enabled by setting the EKBI bit in EIE1 register and EA=1. The PATN_SEL bit in the Keypad Interrupt Control Register (KBCON) is used to define “equal” or “not-equal” for the comparison. The keypad input can be selected from the port pins on Port 0, Port 2, Port 5 and {P4.3~4.0, P3.7~P3.4} by KBIPS1 and KBIPS0 on AUXR1.7~6. The default keypad input is indexed on Port o.

In order to use the Keypad Interrupt as the “Keyboard” Interrupt, the user needs to set KBPATN=0xFF and PATN_SEL=0 (not equal), then any key connected to keypad input which is enabled by KBMASK register will cause the hardware to set the interrupt flag KBIF and generate an interrupt if it has been enabled. The interrupt may wake up the CPU from Idle mode or Power-Down mode. This feature is particularly useful in handheld, battery powered systems that need to carefully manage power consumption but also need to be convenient to use.

26.1. KBI Structure

Figure 26–1. Keypad Interrupt (KBI) structure

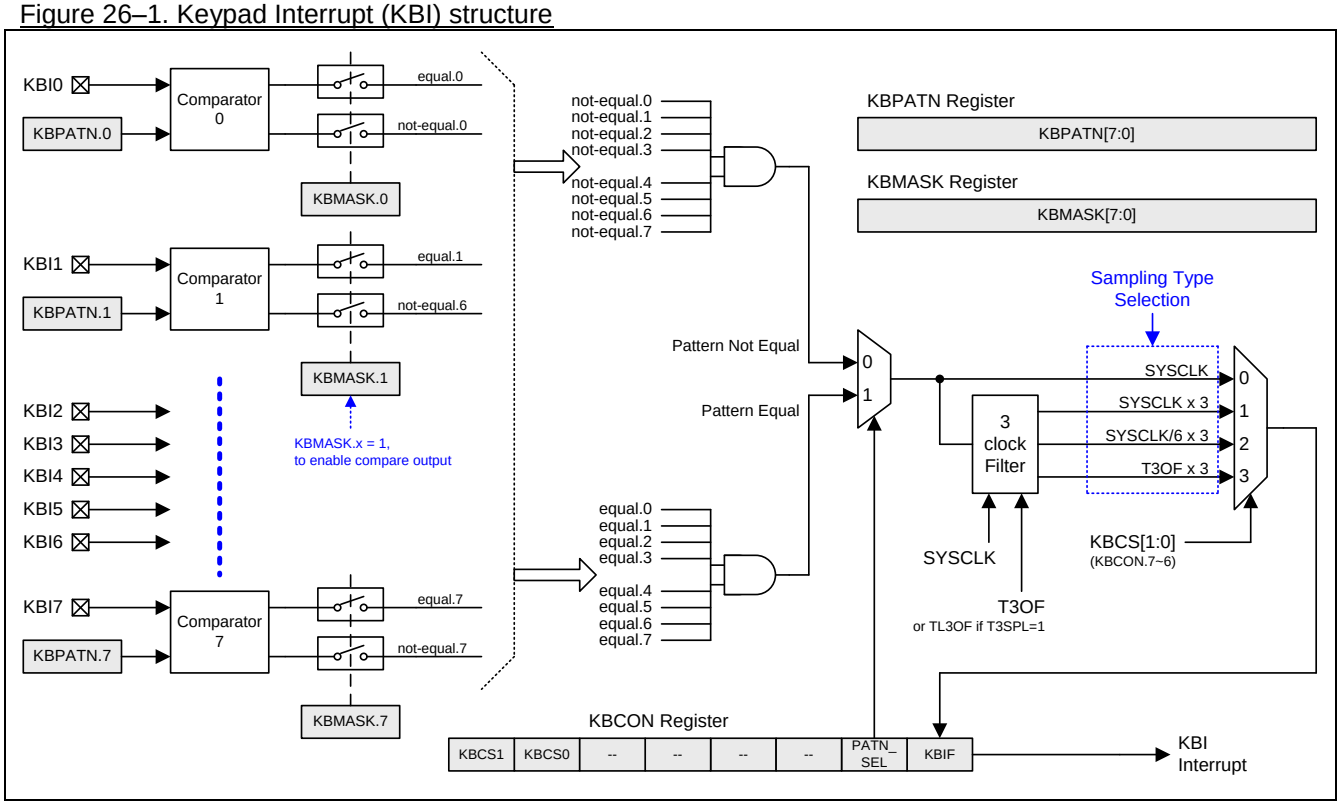

26.2. KBI Register

The following special function registers are related to the KBI operation:

KBPATN: Keypad Pattern Register

SFR Page = 0~F
SFR Address = 0xD5 RESET= 1111-1111

7	6	5	4	3	2	1	0
KBPATN.7	KBPATN.6	KBPATN.5	KBPATN.4	KBPATN.3	KBPATN.2	KBPATN.1	KBPATN.0
R/W	R/W	R/W	R/W	R/W	R/W	R/W	R/W

Bit 7~0: KBPATN.7~0: The keypad pattern, reset value is 0xFF.

KBCON: Keypad Control Register

SFR Page = 0~F
SFR Address = 0xD6 RESET= XXXX-XX01

7	6	5	4	3	2	1	0
KBCS1	KBCS0	--	--	--	--	PATN_SEL	KBIF
R/W	R/W	W	W	W	W	R/W	R/W

Bit 7~6: KBCS1~0, KBI Filter mode control.

KBCS1~0	KBI input filter mode
00	Disabled
01	SYSCLK x 3
10	SYSCLK/6 x 3
11	T3OF x 3

Bit 5~2: Reserved. Software must write “0” on these bits when KBCON is written.

Bit 1: PATN_SEL, Pattern Matching Polarity selection.
0: The keypad input has to be not equal to user-defined keypad pattern in KBPATN to generate the interrupt.
1: The keypad input has to be equal to the user-defined keypad pattern in KBPATN to generate the interrupt.

Bit 0: KBIF, Keypad Interrupt Flag. The default value of KBIF is set to “1”.
0: Must be cleared by software by writing “0”.
1: Set when keypad input matches user defined conditions specified in KBPATN, KBMASK, and PATN_SEL.

KBMASK: Keypad Interrupt Mask Register

SFR Page = 0~F
SFR Address = 0xD7 RESET= 0000-0000

7	6	5	4	3	2	1	0
KBMASK.7	KBMASK.6	KBMASK.5	KBMASK.4	KBMASK.3	KBMASK.2	KBMASK.1	KBMASK.0
R/W	R/W	R/W	R/W	R/W	R/W	R/W	R/W

KBMASK.7: When set, enables Px.7 as a cause of a Keypad Interrupt (KBI7).
KBMASK.6: When set, enables Px.6 as a cause of a Keypad Interrupt (KBI6).
KBMASK.5: When set, enables Px.5 as a cause of a Keypad Interrupt (KBI5).
KBMASK.4: When set, enables Px.4 as a cause of a Keypad Interrupt (KBI4).
KBMASK.3: When set, enables Px.3 as a cause of a Keypad Interrupt (KBI3).
KBMASK.2: When set, enables Px.2 as a cause of a Keypad Interrupt (KBI2).
KBMASK.1: When set, enables Px.1 as a cause of a Keypad Interrupt (KBI1).
KBMASK.0: When set, enables Px.0 as a cause of a Keypad Interrupt (KBI0).
x = 0, 2, 5 or 4/3.

AUXR1: Auxiliary Control Register 1

SFR Page = 0~F

SFR Address = 0xA2 POR+RESET = 0000-0000

7	6	5	4	3	2	1	0
KBIPS1	**KBIPS0**	SPIPS0	S1PS1	S1PS0	T01PS0	EXTRAM	DPS
R/W	**R/W**	**R/W**	**R/W**	**R/W**	**R/W**	**R/W**	**R/W**

Bit 7~6: KBIPS1~0, KBI Port Selection [1:0].

KBIPS1~0	KBI.7~0
00	P0.7 ~ P0.0
01	P2.7 ~ P2.0
10	P5.7 ~ P5.0
11	P4.3~P4.0, P3.7~P3.4

27. 10-Bit ADC

The ADC subsystem for the **MG82FG5C64** consists of an analog multiplexer (AMUX), and a **500** ksps, **10**-bit successive-approximation-register ADC. The AMUX can be configured via the Special Function Registers shown in Figure 27–1. ADC operates in Single-ended mode, and may be configured to measure any of the pins on Port 1 or internal reference. The ADC subsystem is enabled only when the ADEN bit in the ADC Control register (ADCON0) is set to logic 1. The ADC subsystem is in low power shutdown when this bit is logic 0.

27.1. ADC Structure

Figure 27–1. ADC Block Diagram

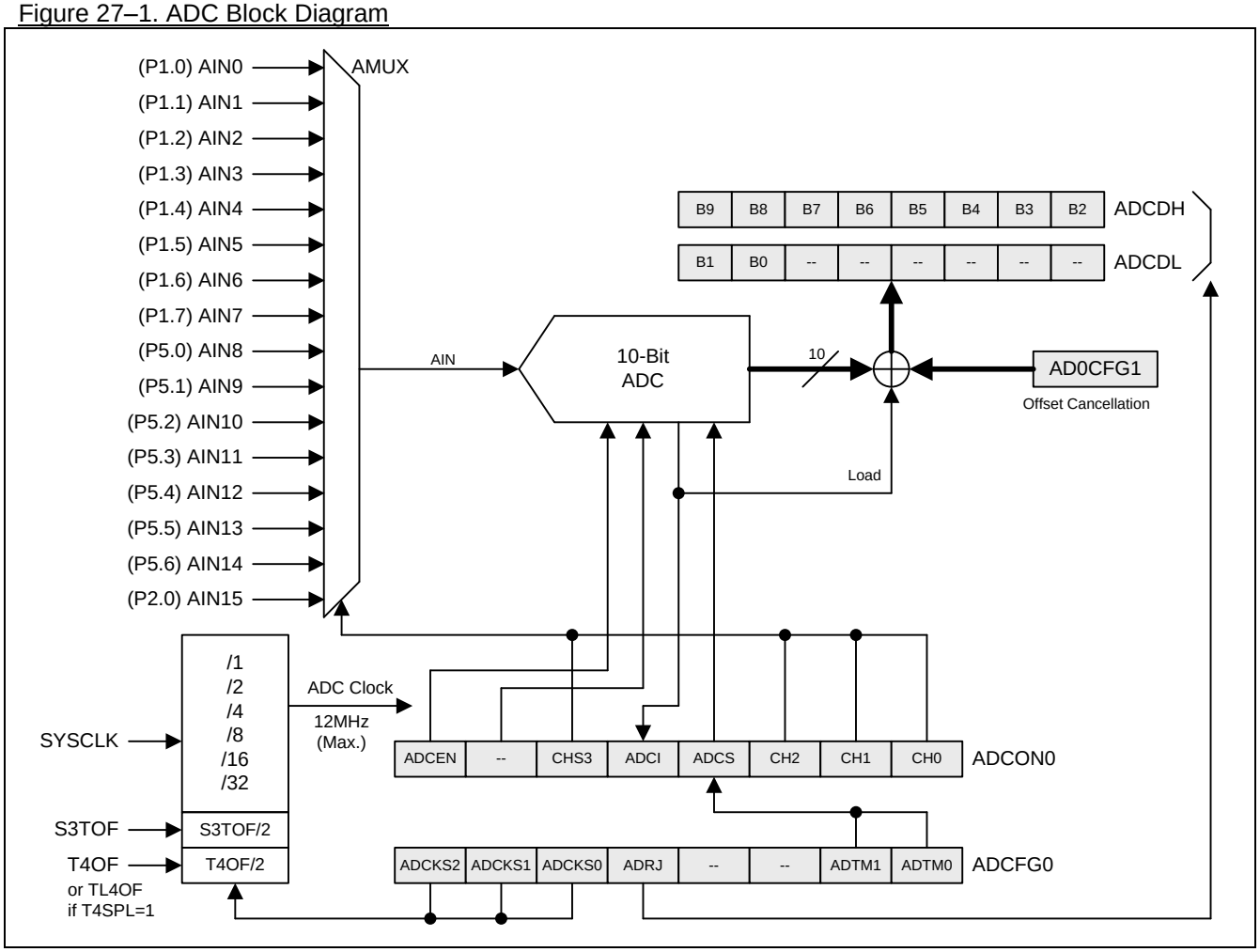

27.2. ADC Operation

ADC has a maximum conversion speed of **500** ksps. The ADC conversion clock is a divided version of the system clock, S1 BRG overflow or Timer 0 overflow, determined by the ADCKS2~0 bits in the ADCFG0 register. The ADC conversion clock should be no more than 24MHz.

After the conversion is complete (ADCI is high), the conversion result can be found in the ADC Result Registers (ADCDH, ADCDL). For single ended conversion, the result is

$$\text{ADC Result} = \frac{V_{IN} \times 1024}{\text{VDD Voltage}}$$

27.2.1. ADC Input Channels

The analog multiplexer (AMUX) selects the inputs to the ADC, allowing any of the pins on Port 1 to be measured in single-ended mode. The ADC input channels are configured and selected by **CHS3~0** in the ADCON0 register as shown in Figure 27–1. The selected pin is measured with respect to GND.

27.2.2. ADC Voltage Reference

27.2.3. Starting a Conversion

Prior to using the ADC function, the user should:

1) Turn on the ADC hardware by setting the ADCEN bit,
2) Select ADCMS to configure ADC for single-ended mode or fully-differential mode
3) Configure the ADC input clock by bits ADCKS2, ADCKS1 and ADCKS0
4) Select the analog input channel by bits **CHS3**, CHS2, CHS1 and CHS0
5) **Configure the ADC voltage reference source**
6) Configure the selected input (shared with P1) to the Input-Only mode by P1, P1M0 and P1AIO registers, and
7) Configure ADC result arrangement using ADRJ bit.

Now, user can set the ADCS bit to start the A-to-D conversion. The conversion time is controlled by bits ADCKS2, ADCKS1 and ADCKS0. Once the conversion is completed, the hardware will automatically clear the ADCS bit, set the interrupt flag ADCI and load the **10** bits of conversion result into ADCH and ADCL (according to ADRJ bit) simultaneously. If user sets the ADCS and selects the ADC trigger mode to **S1BRG/Timer0** over flow or free-run, then the ADC will keep conversion continuously unless ADCEN is cleared or configure ADC to manual mode.

As described above, the interrupt flag ADCI, when set by hardware, shows a completed conversion. Thus two ways may be used to check if the conversion is completed: (1) Always polling the interrupt flag ADCI by software; (2) Enable the ADC interrupt by setting bits EADC (in EIE1 register) and EA (in IE register), and then the CPU will jump into its Interrupt Service Routine when the conversion is completed. Regardless of (1) or (2), the ADCI flag should be cleared by software before next conversion.

27.2.4. ADC Conversion Time

The user can select the appropriate conversion speed according to the frequency of the analog input signal. The maximum input clock of the ADC is 6MHz and it operates a fixed conversion time with **30** ADC clocks. User can configure the ADCKS2~0 in ADCFG0 to specify the conversion rate. For example, if Fosc=12MHz and the ADCKS = SYSCLK/2 is selected, then the frequency of the analog input should be no more than **200**KHz to maintain the conversion accuracy. (Conversion rate = 12MHz/2/30 = 200KHz.)

27.2.5. I/O Pins Used with ADC Function

The analog input pins used for the A/D converters also have its I/O port ‘s digital input and output function. In order to give the proper analog performance, a pin that is being used with the ADC should have its digital output as disabled. It is done by putting the port pin into the input-only mode. And when an analog signal is applied to the ADCI7~0 pin and the digital input from this pin is not needed, software could set the corresponding pin to analog-input-only in P1AIO to reduce power consumption in the digital input buffer. The port pin configuration for analog input function is described in the Section “13.2.2 Port 1 Register”.

27.2.6. Idle and Power-Down Mode

If the ADC is turned on in Idle mode and Power-Down mode, it will consume a little power. So, power consumption can be reduced by turning off the ADC hardware (ADCEN=0) before entering Idle mode and Power-Down mode.

In Power-Down mode, the ADC does not function. If software triggers the ADC operation in Idle mode, the ADC will finish the conversion and set the ADC interrupt flag, ADCI. When the ADC interrupt enable (EADC, EIE1.1) is set, the ADC interrupt will wake up CPU from Idle mode.

27.3. ADC Register

ADCON0: ADC Control Register 0

SFR Page = 0~F

SFR Address = **0xC4** RESET = 0000-0000

7	6	5	4	3	2	1	0
ADCEN	--	CHS3	ADCI	ADCS	CHS2	CHS1	CHS0
R/W	**R/W**	**R/W**	**R/W**	**R/W**	**R/W**	**R/W**	**R/W**

Bit 7: ADCEN, ADC Enable.
0: Clear to turn off the ADC block.
1: Set to turn on the ADC block. At least 5us ADC enabled time is required before set ADCS.

Bit 6: Reserved. Software must write “0” on this bit when ADCON0 is written.

Bit 5: CHS3. Combined CH2~0 to select ADC input channel.

Bit 4: ADCI, ADC Interrupt Flag.
0: The flag must be cleared by software.
1: This flag is set when an A/D conversion is completed. An interrupt is invoked if it is enabled.

Bit 3: ADCS. ADC Start of conversion.
0: ADCS cannot be cleared by software.
1: Setting this bit by software starts an A/D conversion. On completion of the conversion, the ADC hardware will clear ADCS and set the ADCI. A new conversion may not be started while either ADCS or ADCI is high.

Bit 2~0: CHS2 ~ CHS1, Input Channel Selection for ADC analog multiplexer.

In Single-ended mode:

CHS4~0	Selected Channel
0 0 0 0 0	AIN0 (P1.0)
0 0 0 0 1	AIN1 (P1.1)
0 0 0 1 0	AIN2 (P1.2)
0 0 0 1 1	AIN3 (P1.3)
0 0 1 0 0	AIN4 (P1.4)
0 0 1 0 1	AIN5 (P1.5)
0 0 1 1 0	AIN6 (P1.6)
0 0 1 1 1	AIN7 (P1.7)
0 1 0 0 0	AIN8 (P5.0)
0 1 0 0 1	AIN9 (P5.1)
0 1 0 1 0	AIN10 (P5.2)
0 1 0 1 1	AIN11 (P5.3)
0 1 1 0 0	AIN12 (P5.4)
0 1 1 0 1	AIN13 (P5.5)
0 1 1 1 0	AIN14 (P5.6)
0 1 1 1 1	AIN15 (P2.0)

ADCFG0: ADC Configuration Register 0

SFR Page = 0~F

SFR Address = 0xC3 RESET = 0000-0000

7	6	5	4	3	2	1	0
ADCKS2	ADCKS1	ADCKS0	ADRJ	--	--	ADTM1	ADTM0
R/W	**R/W**	**R/W**	**R/W**	**W**	**W**	**R/W**	**R/W**

Bit 7~5: ADC Conversion Clock Select bits.

ADCKS[1:0]	ADC Clock Selection
0 0 0	SYSCLK

0 0 1	SYSCLK/2
0 1 0	SYSCLK/4
0 1 1	SYSCLK/8
1 0 0	SYSCLK/16
1 0 1	SYSCLK/32
1 1 0	S3TOF/2
1 1 1	T4OF/2

Note:

1. *SYSCLK is the system clock.*
2. *S31TOF is UART3 Baud-Rate Generator Overflow.*
3. *T4OF is Timer 4 Overflow.*

Bit 4: ADRJ, ADC result Right-Justified selection.
0: The most significant 8 bits of conversion result are saved in ADCH[7:0], while the least significant 2 bits in ADCL[7:6].
1: The most significant 2 bits of conversion result are saved in ADCH[1:0], while the least significant 8 bits in ADCL[7:0].

If ADRJ = 0

ADCDH: ADC Date High Byte Register

SFR Page = 0~F
SFR Address = 0xC6 RESET = xxxx-xxxx

7	6	5	4	3	2	1	0
(B9)	(B8)	(B7)	(B6)	(B5)	(B4)	(B3)	(B2)
R	**R**	**R**	**R**	**R**	**R**	**R**	**R**

ADCL: ADC Data Low Byte Register

SFR Page = 0~F
SFR Address = **0xC5** RESET = xxxx-xxxx

7	6	5	4	3	2	1	0
(B1)	(B0)	--	--	--	--	--	--
R	**R**	**R**	**R**	**R**	**R**	**R**	**R**

If ADRJ = 1

ADCDH

7	6	5	4	3	2	1	0
--	--	--	--	--	--	(B9)	(B8)
R	**R**	**R**	**R**	**R**	**R**	**R**	**R**

ADCDL

7	6	5	4	3	2	1	0
(B7)	(B6)	(B5)	(B4)	(B3)	(B2)	(B1)	(B0)
R	**R**	**R**	**R**	**R**	**R**	**R**	**R**

When in Single-ended Mode, conversion codes are represented as 10-bit unsigned integers. Inputs are measured from '0' to VREF x 1023/1024. Example codes are shown below for both right-justified and left-justified data. Unused bits in the ADCDH and ADCDL registers are set to '0'.

Input Voltage (Single-Ended)	ADCDH:ADCDL (ADRJ = 0)	ADCDH:ADCDL (ADRJ = 1)
VREF+ x 1023/1024	0xFFC0	0x03FF
VREF+ x 512/1024	0x8000	0x0200
VREF+ x 256/1024	0x4000	0x0100
VREF+ x 128/1024	0x2000	0x0080
0	0x0000	0x0000

Bit 3~2: Reserved. Software must write "0" on these bits when ADCFG0 is written.

Bit 1~0: ADC Trigger Mode selection.

ADTM[1:0]	ADC Conversion Start Selection
0 0	Set ADCS

0 1	Timer 0 overflow
1 0	Free running mode
1 1	S3 BRG overflow

ADCFG1: ADC Configuration Register 1

SFR Page = 0~F

SFR Address = 0xBB RESET = xxx0-0000

7	6	5	4	3	2	1	0
--	--	--	SIGN	AOS.3	AOS.2	AOS.1	AOS.0
W	W	W	R/W	R/W	R/W	R/W	R/W

Bit 7~5: Reserved. Software must write “0” on these bits when ADCFG1 is written.

Bit 4~0: SIGN and AOS.3~0. The register value adjusts the ADC result in {ADCH, ADCL} for offset cancellation. Software can dynamically collect the ADC offset value by setting ADCON0.AZEN and update the offset value to AD0ROC for an auto-cancellation on ADC transfer result. Software can also stores the value in **MG82FG5C64** IAP zone to use it as a constant parameter for ADC offset cancellation. The following table lists the AD0ROC adjustment value for ADC transfer result.

{Sign, AOS.[3:0]}	Value in {ADCDH, ADCDL}
0_1111	ADC transfer value + 15
0_1110	ADC transfer value + 14
……	……
0_0010	ADC transfer value + 2
0_0001	ADC transfer value + 1
0_0000	ADC transfer value + 0
1_1111	ADC transfer value – 1
1_1110	ADC transfer value – 2
……	……
1_0001	ADC transfer value – 15
1_0000	ADC transfer value – 16

P1AIO: Port 1 Analog Input Only

SFR Page = 0 only

SFR Address = 0x92 RESET = 0000-0000

7	6	5	4	3	2	1	0
P17AIO	P16AIO	P15AIO	P14AIO	P13AIO	P12AIO	P11AIO	P10AIO
R/W	R/W	R/W	R/W	R/W	R/W	R/W	R/W

0: Port pin has digital and analog input capability.
1: Port pin only has analog input only. The corresponding Port PIN Register bit will always read as zero when this bit is set.

PxAIO2: Port x Analog Input Only

SFR Page = 1 only

SFR Address = 0x92 RESET = 0000-0000

7	6	5	4	3	2	1	0
P20AIO	P56AIO	P55AIO	P54AIO	P53AIO	P52AIO	P51AIO	P50AIO
R/W	R/W	R/W	R/W	R/W	R/W	R/W	R/W

0: Port pin has digital and analog input capability.
1: Port pin only has analog input only. The corresponding Port PIN Register bit will always read as zero when this bit is set.

28. Analog Comparator 0/1/2 (AC0/AC1/AC2)

28.1. AC0/AC1/AC2 Structure

Figure 28–1. Analog Comparator 0 Block Diagram

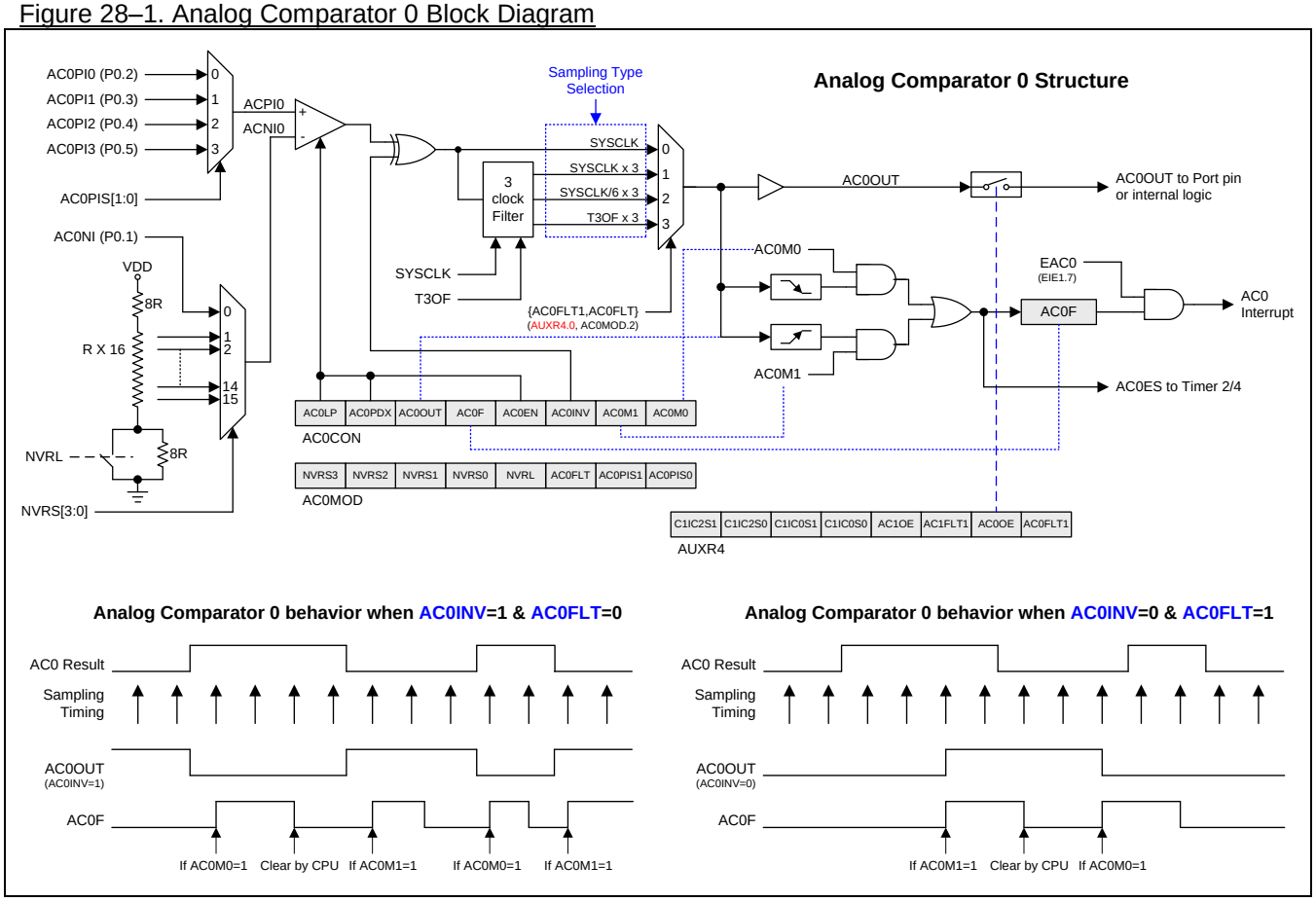

Figure 28–2. Analog Comparator 1 Block Diagram

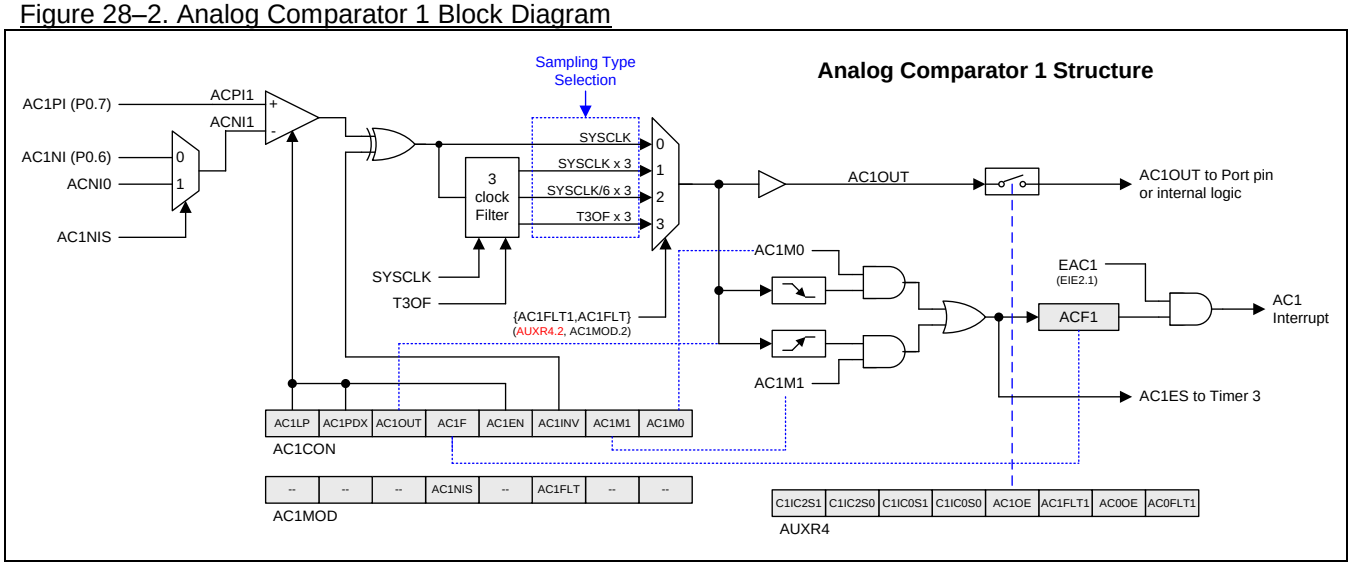

Figure 28–3. Analog Comparator 2 Block Diagram

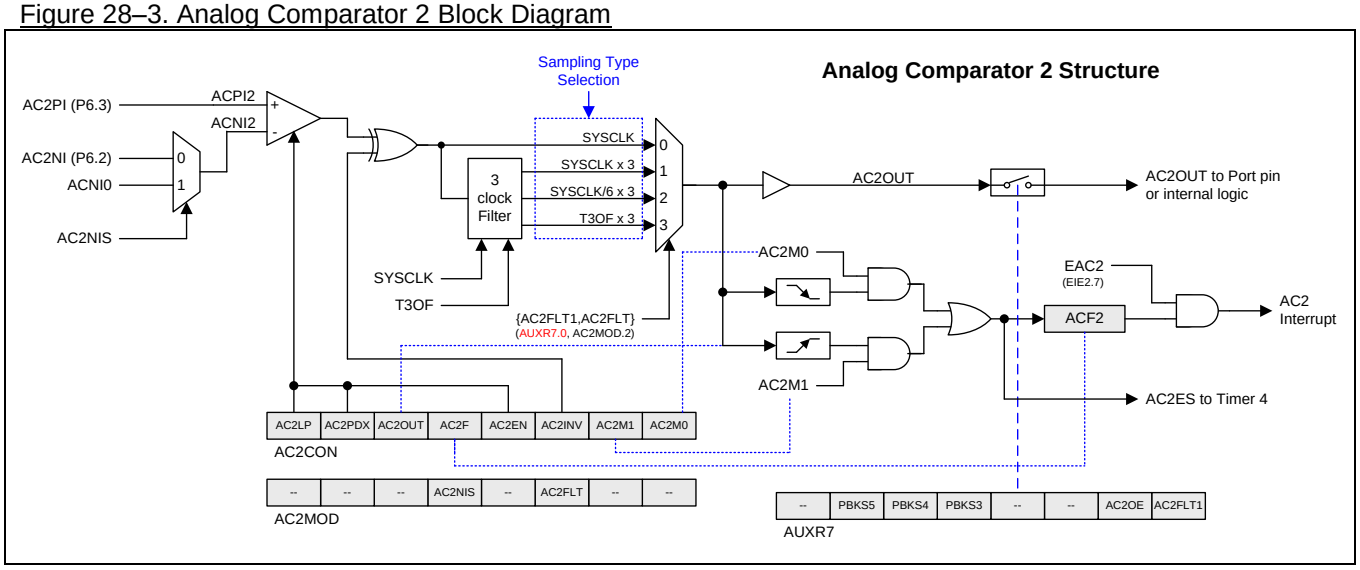

28.2. AC0/AC1/AC2 Register

AC0CON: Analog Comparator 0 Control & Status Register

SFR Page = **0 only**

SFR Address = 0x9E RESET = 00X0-0000

7	6	5	4	3	2	1	0
AC0LP	AC0PDX	AC0OUT	AC0F	AC0EN	AC0INV	AC0M1	AC0M0
R/W	**R/W**	**R**	**R/W**	**R/W**	**R/W**	**R/W**	**R/W**

Bit 7: AC0LP, Analog Comparator 0 Low Power Enable.
0: Disable AC0 low power mode.
1: Enable AC0 low power mode.

Bit 6: AC0PDX, Analog Comparator 0 control in PD mode.
0: Program the Analog Comparator 0 to be gated off during PD mode.
1: Program the Analog Comparator 0 to continue its function during PD mode.
If AC0EN, AC0PDX and EAC0 have been set, the comparator in PD function can only wake up CPU in low level or high level mode.

Bit 5: AC0OUT, this is a read only bit from comparator output.

AC0 Input	AC0INV = 0	AC0INV = 1
ACPI0(+) > ACNI0(-)	AC0OUT = 1	AC0OUT = 0
ACPI0(+) < ACNI0(-)	AC0OUT = 0	AC0OUT = 1

Bit 4: AC0F. Analog Comparator 0 Interrupt Flag.
0: The flag must be cleared by software.
1: Set when the comparator output meets the conditions specified by the AC0M [1:0] bits and AC0EN is set. The interrupt may be enabled/disabled by setting/clearing bit 7 of EIE1.

Bit 3: AC0EN. Analog Comparator 0 Enable.
0: Clearing this bit will force the comparator output low and prevent further events from setting AC0F.
1: Set this bit to enable the comparator.

Bit 2: AC0INV, Analog Comparator 0 output inversion bit.
0: AC0 output not inverted.
1: AC0 output inverted.

Bit 1~0: AC0M[1:0], Analog Comparator 0 Interrupt Mode.

AC0M[1:0]	AC0 Interrupt Mode
0 0	Reserved
0 1	Comparator 0 detects output Falling edge
1 0	Comparator 0 detects output Rising edge
1 1	Comparator 0 detects output Toggle

AC0MOD: Analog Comparator 0 Mode Register

SFR Page = **0 only**

SFR Address = 0x9F RESET = 0000-0000

7	6	5	4	3	2	1	0
NVRS3	NVRS2	NVRS1	NVRS0	NVRL	AC0FLT	AC0PIS1	AC0PIS0
R/W	**R/W**	**R/W**	**R/W**	**R/W**	**R/W**	**R/W**	**R/W**

Bit 7~5: NVRS[3:0], Negative input on Voltage Reference selector of analog comparator 0. The four bits determine the analog comparator (V-) input source as following:

NVRL = 0, select high range

NVRS[3:0]	(V-) Input	NVRS[3:0]	(V-) Input
0000	AC0NI(P0.1)	1000	16/32 VDD
0001	9/32 VDD	1001	17/32 VDD

0010	10/32 VDD	1010	18/32 VDD
0011	11/32 VDD	1011	19/32 VDD
0100	12/32 VDD	1100	20/32 VDD
0101	13/32 VDD	1101	21/32 VDD
0110	14/32 VDD	1110	22/32 VDD
0111	15/32 VDD	1111	23/32 VDD

NVRL = 1, select low range

NVRS[3:0]	(V-) Input	NVRS[3:0]	(V-) Input
0000	AC0NI(P0.1)	1000	8/24 VDD
0001	1/24 VDD	1001	9/24 VDD
0010	2/24 VDD	1010	10/24 VDD
0011	3/24 VDD	1011	11/24 VDD
0100	4/24 VDD	1100	12/24 VDD
0101	5/24 VDD	1101	13/24 VDD
0110	6/24 VDD	1110	14/24 VDD
0111	7/24 VDD	1111	15/24 VDD

Bit 3: NVRL, Negative Voltage Reference Low range select.
0: Select NVRS on high range.
1: Select NVRS on low range.

Bit 2: AC0FLT, Analog Comparator 0 output Filter control. It selects AC0OUT filter mode with AC0FLT1 (AUXR4.0)

AC0FLT1, AC0FLT	AC0OUT filter mode
0 0	Disabled
0 1	SYSCLK x 3
1 0	SYSCLK/6 x 3
1 1	T3OF x 3

Bit 1~0: AC0PIS[1:0], Positive input on I/O channel selector of analog comparator 0. The two bits determine the analog comparator (V+) input source as following:

AC0PIS[1:0]	(V+) Input Select
0 0	AC0PI0(P0.2)
0 1	AC0PI1(P0.3)
1 0	AC0PI2(P0.4)
1 1	AC0PI3(P0.5)

AC1CON: Analog Comparator 1 Control & Status Register

SFR Page = **1 Only**

SFR Address = 0x9E RESET = 00X0-0000

7	6	5	4	3	2	1	0
AC1LP	AC1PDX	AC1OUT	AC1F	AC1EN	AC1INV	AC1M1	AC1M0
R/W	**R/W**	**R**	**R/W**	**R/W**	**R/W**	**R/W**	**R/W**

Bit 7: AC1LP, Analog Comparator 1 Low Power Enable.
0: Disable AC1 low power mode.
1: Enable AC1 low power mode.

Bit 6: AC1PDX, Analog Comparator 1 control in PD mode.
0: Program the Analog Comparator 1 to be gated off during PD mode.
1: Program the Analog Comparator 1 to continue its function during PD mode.
If AC1EN, AC1PDX and EAC1 have been set, the comparator in PD function can only wake up CPU in low level or high level mode.

Bit 5: AC1OUT, this is a read only bit from comparator output.

AC1 Input	AC1INV = 0	AC1INV = 1

ACPI1(+) > ACNI1(-)	AC1OUT = 1	AC1OUT = 0
ACPI1(+) < ACNI1(-)	AC1OUT = 0	AC1OUT = 1

Bit 4: AC1F. Analog Comparator 1 Interrupt Flag.
0: The flag must be cleared by software.
1: Set when the comparator output meets the conditions specified by the AC1M [1:0] bits and AC1EN is set. The interrupt may be enabled/disabled by setting/clearing bit 2 of EIE2.

Bit 3: AC1EN. Analog Comparator 1 Enable.
0: Clearing this bit will force the comparator output low and prevent further events from setting AC1F.
1: Set this bit to enable the comparator.

Bit 2: AC1INV, Analog Comparator 1 output inversion bit.
0: AC1 output not inverted.
1: AC1 output inverted.

Bit 1~0: AC1M[1:0], Analog Comparator 1 Interrupt Mode.

AC1M[1:0]	AC1 Interrupt Mode
0 0	Reserved.
0 1	Comparator 1 detects output Falling edge
1 0	Comparator 1 detects output Rising edge
1 1	Comparator 1 detects output Toggle

AC1MOD: Analog Comparator 1 Mode Register

SFR Page = **1 Only**
SFR Address = 0x9F RESET = xxx0-x0xx

7	6	5	4	3	2	1	0
--	--	--	AC1NIS	--	AC1FLT	--	--
W	**W**	**W**	**R/W**	**W**	**R/W**	**W**	**W**

Bit 4: AC1NIS. Analog Comparator 1 Negative Input Selection.
0: Select analog comparator 1 negative input from port pin, AC1NI (P0.6).
1: Select analog comparator 1 negative input from decoded analog comparator 0 negative input, ACNI0.

Bit 2: AC1FLT, Analog Comparator 1 output Filter control. It selects AC1OUT filter mode with AC1FLT1 (AUXR4.2)

AC1FLT1, AC1FLT	AC1OUT filter mode
0 0	Disabled
0 1	SYSCLK x 3
1 0	SYSCLK/6 x 3
1 1	T3OF x 3

AC2CON: Analog Comparator 2 Control & Status Register

SFR Page = **2 Only**
SFR Address = 0x9E RESET = 00X0-0000

7	6	5	4	3	2	1	0
AC2LP	AC2PDX	AC2OUT	AC2F	AC2EN	AC2INV	AC2M1	AC2M0
R/W	**R/W**	**R**	**R/W**	**R/W**	**R/W**	**R/W**	**R/W**

Bit 7: AC2LP, Analog Comparator 2 Low Power Enable.
0: Disable AC2 low power mode.
1: Enable AC2 low power mode.

Bit 6: AC2PDX, Analog Comparator 2 control in PD mode.
0: Program the Analog Comparator 2 to be gated off during PD mode.
1: Program the Analog Comparator 2 to continue its function during PD mode.
If AC2EN, AC2PDX and EAC2 have been set, the comparator in PD function can only wake up CPU in low level or high level mode.

Bit 5: AC2OUT, this is a read only bit from comparator output.

AC2 Input	AC2INV = 0	AC2INV = 1
ACPI2(+) > ACNI2(-)	AC2OUT = 1	AC2OUT = 0
ACPI2(+) < ACNI2(-)	AC2OUT = 0	AC2OUT = 1

Bit 4: ACF2. Analog Comparator 2 Interrupt Flag.
0: The flag must be cleared by software.
1: Set when the comparator output meets the conditions specified by the AC1M [1:0] bits and AC1EN is set. The interrupt may be enabled/disabled by setting/clearing bit 7 of EIE2.

Bit 3: AC2EN. Analog Comparator 2 Enable.
0: Clearing this bit will force the comparator output low and prevent further events from setting AC2F.
1: Set this bit to enable the comparator.

Bit 2: AC2INV, Analog Comparator 2 output inversion bit.
0: AC2 output not inverted.
1: AC2 output inverted.

Bit 1~0: AC2M[1:0], Analog Comparator 2 Interrupt Mode.

AC2M[1:0]	AC2 Interrupt Mode
0 0	Reserved.
0 1	Comparator 2 detects output Falling edge
1 0	Comparator 2 detects output Rising edge
1 1	Comparator 2 detects output Toggle

AC2MOD: Analog Comparator 2 Mode Register

SFR Page = **1 Only**
SFR Address = 0x9F RESET = xxx0-x0xx

7	6	5	4	3	2	1	0
--	--	--	AC2NIS	--	AC2FLT	--	--
W	**W**	**W**	**R/W**	**W**	**R/W**	**W**	**W**

Bit 4: AC2NIS. Analog Comparator 2 Negative Input Selection.
0: Select analog comparator 1 negative input from port pin, AC2NI (P6.2).
1: Select analog comparator 1 negative input from decoded analog comparator 0 negative input, ACNI0.

Bit 2: AC2FLT, Analog Comparator 2 output Filter control. It selects AC2OUT filter mode with AC2FLT1 (AUXR7.0)

AC1FLT1, AC1FLT	AC1OUT filter mode
0 0	Disabled
0 1	SYSCLK x 3
1 0	SYSCLK/6 x 3
1 1	T3OF x 3

PxAIO1: Port x Analog Input Only 1

SFR Page = 0 only
SFR Address = 0x92 POR+RESET = 0000-000x

7	6	5	4	3	2	1	0
P07AIO	P06AIO	P05AIO	P04AIO	P03AIO	P02AIO	P01AIO	**AC2AIO**
R/W	**R/W**	**W**	**R/W**	**R/W**	**R/W**	**R/W**	**R/W**

Bit 7~6: P07AIO ~ P06AIO, P0.7~P0.6 Analog-Input-Only configuration registers.
0: Port pin has digital and analog input capability.
1: Port pin only has analog input only for AC1 (Analog Comparator 0) input application. The corresponding Port PIN Register bit will always read as “0” when this bit is set.

Bit 5~1: P05AIO ~ P01AIO, P0.5~P0.1 Analog-Input-Only configuration registers.
0: Port pin has digital and analog input capability.

1: Port pin only has analog input only for AC0 (Analog Comparator 0) input application. The corresponding Port PIN Register bit will always read as “0” when this bit is set.

Bit 0: AC2AIO, AC2 (Analog Comparator 2) port pin analog-input configuration register.

AC2AIO	AC2NIS (AC2MOD.4)	P6.3 (AC2PI)	P6.2 (AC2NI)
0	x	P6M0.3	P6M0.2
1	0	Analog Input Only	Analog Input Only
1	1	Analog Input Only	P6M0.2

AUXR4: Auxiliary Register 4

SFR Page = 1 only
SFR Address = 0xA4 POR+RESET = 0000-0000

7	6	5	4	3	2	1	0
C1IC2S1	C1IC2S0	C1IC0S1	C1IC0S0	**AC1OE**	**AC1FLT1**	**AC0OE**	**AC0FLT1**
R/W	**R/W**	**R/W**	**R/W**	**R/W**	**R/W**	**R/W**	**R/W**

Bit 3: AC1OE, AC1OUT output enable on port pin.
0: Disable AC1OUT output on port pin.
1: Enable AC1OUT output on P7.2.

Bit 1: AC0OE, AC0OUT output enable on port pin.
0: Disable AC0OUT output on port pin.
1: Enable AC0OUT output on P0.0.

AUXR7: Auxiliary Register 7

SFR Page = 4 only
SFR Address = 0xA4 RESET = x000-xx00

7	6	5	4	3	2	1	0
--	PBKS5	PBKS4	PBKS3	--	--	AC2OE	AC2FLT1
R/W	**R/W**	**R/W**	**R/W**	**R/W**	**R/W**	**R/W**	**R/W**

Bit 1: AC2OE, AC2OUT output enable on port pin.
0: Disable AC2OUT output on port pin.
1: Enable AC2OUT output on P6.4.

29. ISP and IAP

The flash memory of **MG82FG5C64** is partitioned into AP-memory, IAP-memory and ISP-memory. AP-memory is used to store user's application program; IAP-memory is used to store the non-volatile application data; and, ISP-memory is used to store the boot loader program for In-System Programming. When MCU is running in ISP region, MCU could modify the AP and IAP memory for software upgraded. If MCU is running in AP region, software could only modify the IAP memory for storage data updated.

29.1. MG82FG5C64 Flash Memory Configuration

There are total 64K bytes of Flash Memory in **MG82FG5C64** and Figure 29–1 shows the device flash configuration of **MG82FG5C64**. The ISP-memory can be configured as disabled or up to 4K bytes space by hardware option. The flash size of IAP memory is located between the IAP low boundary and IAP high boundary. The IAP low boundary is defined by the value of IAPLB register. The IAP high boundary is associated with ISP start address which decides ISP memory size by hardware option. The IAPLB register value is configured by hardware option or AP software programming. All of the AP, IAP and ISP memory are shared the total 64K bytes flash memory.

Figure 29–1. **MG82FG5C64** Flash Memory Configuration

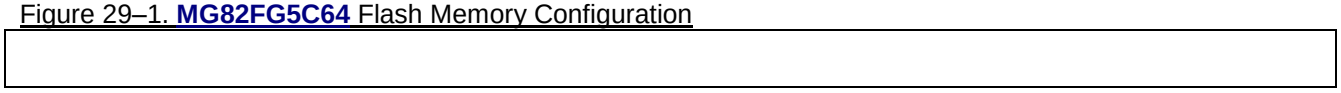

Note:

*In default, the **MG82FG5C64** that Megawin shipped had configured the flash memory for 1.5K ISP, 2.5K IAP and Lock enabled. The 1.5K ISP region is inserted Megawin proprietary COMBO ISP code to perform In-System-Programming through Megawin 1-Line ISP protocol and COM port ISP. The 2.5K IAP size can be re-configured by software for application required.*

29.2. MG82FG5C64 Flash Access in ISP/IAP

There are 3 flash access modes are provided in **MG82FG5C64** for ISP and IAP application: page erase mode, byte program mode and read mode. MCU software uses these three modes to update new data into flash storage and get flash content. This section shows the flow chart and demo code for the various flash modes.

Before perform ISP/IAP operation, the user should fill the bits XCKS5~XCKS0 in CKCON1 register with a proper value. (Refer to Section "8.2 Clock Register")

To do Page Erase (512 Bytes per Page)

Step 1: Set IFMT register to select Page Erase Mode.
Step 2: Fill page address in IFADRH & IFADRL registers.
Step 3: Sequentially write 0x46h then 0xB9h to SCMD register to trigger an ISP processing.

To do Byte Program

Step 1: Set IFMT register to select Byte Program Mode.
Step 2: Fill byte address in IFADRH & IFADRL registers.
Step 3: Fill data to be programmed in IFD register.
Step 4: Sequentially write 0x46h then 0xB9h to SCMD register to trigger an ISP processing.

To do Read

Step 1: Set IFMT register to select Read Mode.
Step 2: Fill byte address in IFADRH & IFADRL registers.
Step 3: Sequentially write 0x46h then 0xB9h to SCMD register to trigger an ISP processing.
Step 4: Now, the Flash data is in IFD register.

The detailed descriptions of flash page erase, byte program and flash read in MG82FG5C64 is listed in the following sections:

29.2.1. ISP/IAP Flash Page Erase Mode

The any bit in flash data of **MG82FG5C64** only can be programmed to “0”. If user would like to write a “1” into flash data, the flash erase is necessary. But the flash erase in **MG82FG5C64** ISP/IAP operation only support “page erase” mode, a page erase will write all data bits to “1” in one page. There are 512 bytes in one page of **MG82FG5C64** and the page start address is aligned to A8~A0 = 0x000. The targeted flash address is defined in IFADRH and IFADRL. So, in flash page erase mode, the IFADRH.0(A8) and IFADRL.7~0(A7~A0) must be written to “0” for right page address selection. Figure 29–2 shows the flash page erase flow in ISPIAP operation.

Figure 29–2. ISP/IAP Page Erase Flow

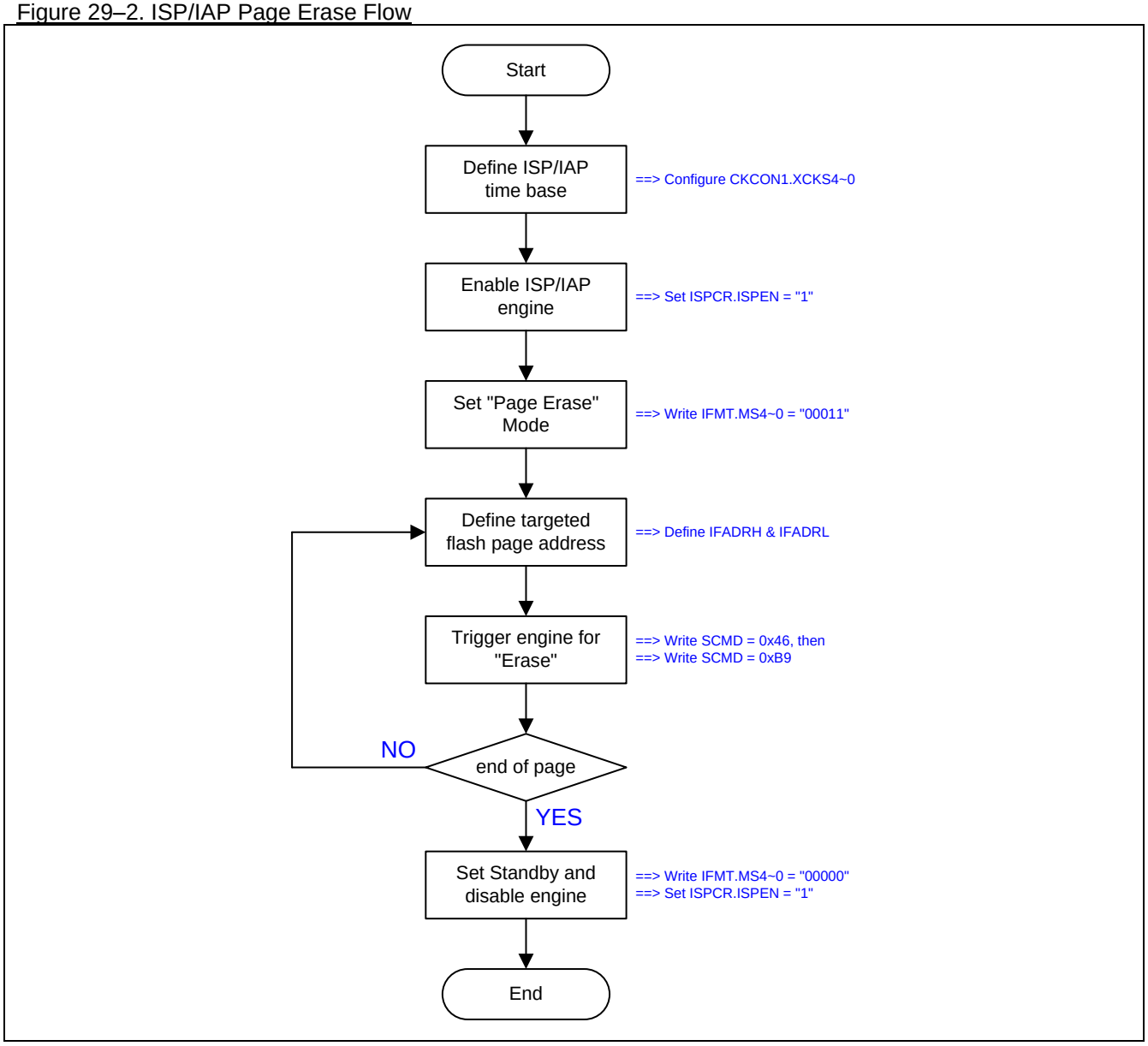

Figure 29–3 shows the demo code of the ISP/IAP page erase operation.

Figure 29–3. Demo Code for ISP/IAP Page Erase

```
MOV    ISPCR,#00010111b ; XCKS4~0 = decimal 23 when OSCin = 24MHz

MOV    ISPCR,#10000000b ; ISPCR.7 = 1, enable ISP

MOV    IFMT,#03h        ; select Page Erase Mode

MOV    IFADRH,??        ; fill [IFADRH,IFADRL] with page address
MOV    IFADRL,??        ;

MOV    SCMD,#46h        ; trigger ISP/IAP processing
MOV    SCMD,#0B9h       ;

;Now, MCU will halt here until processing completed

MOV    IFMT,#00h        ; select Standby Mode
MOV    ISPCR,#00000000b ; ISPCR.7 = 0, disable ISP
```

29.2.2. ISP/IAP Flash Byte Program Mode

The “program” mode of **MG82FG5C64** provides the byte write operation into flash memory for new data updated. The IFADRH and IFADRL point to the physical flash byte address. IFD stores the content which will be programmed into the flash. Figure 29–4 shows the flash byte program flow in ISP/IAP operation.

Figure 29–4. ISP/IAP byte Program Flow

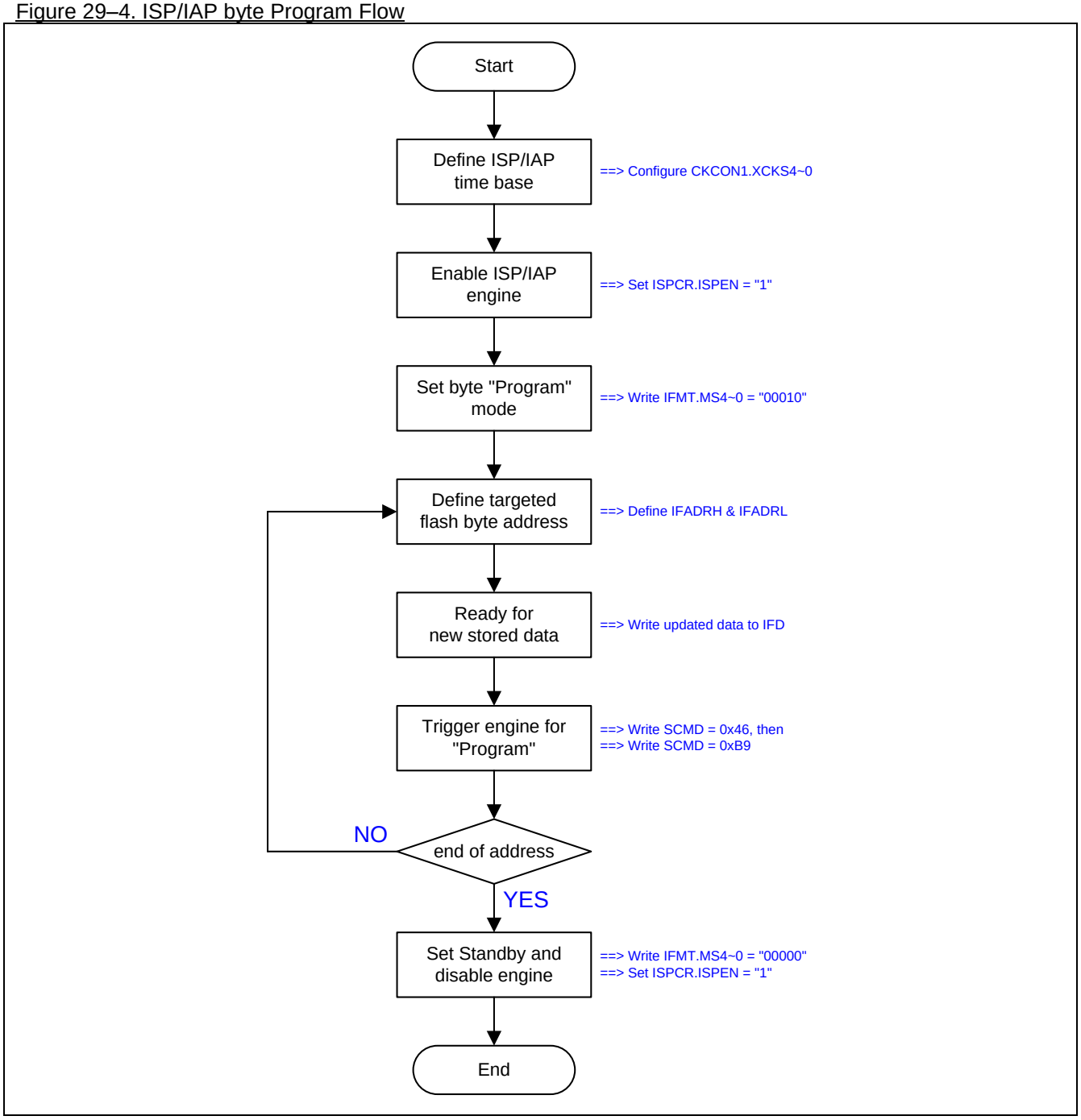

Figure 29–5 shows the demo code of the ISP/IAP byte program operation.

Figure 29–5. Demo Code for ISP/IAP byte Program

```
MOV   ISPCR,#00010111b ; XCKS4~0 = decimal 23 when OSCin = 24MHz

MOV   ISPCR,#10000011b ; ISPCR.7=1, enable ISP

MOV   IFMT,#02h        ; select Program Mode

MOV   IFADRH,??        ; fill [IFADRH,IFADRL] with byte address
MOV   IFADRL,??        ;

MOV   IFD,??           ; fill IFD with the data to be programmed

MOV   SCMD,#46h        ;trigger ISP/IAP processing
MOV   SCMD,#0B9h       ;

;Now, MCU will halt here until processing completed

MOV   IFMT,#00h        ; select Standby Mode
MOV   ISPCR,#00000000b ; ISPCR.7 = 0, disable ISP
```

29.2.3. ISP/IAP Flash Read Mode

The “read” mode of **MG82FG5C64** provides the byte read operation from flash memory to get the stored data. The IFADRH and IFADRL point to the physical flash byte address. IFD stores the data which is read from the flash content. It is recommended to verify the flash data by read mode after data programmed or page erase. Figure 29–6 shows the flash byte read flow in ISP/IAP operation.

Figure 29–6. ISP/IAP byte Read Flow

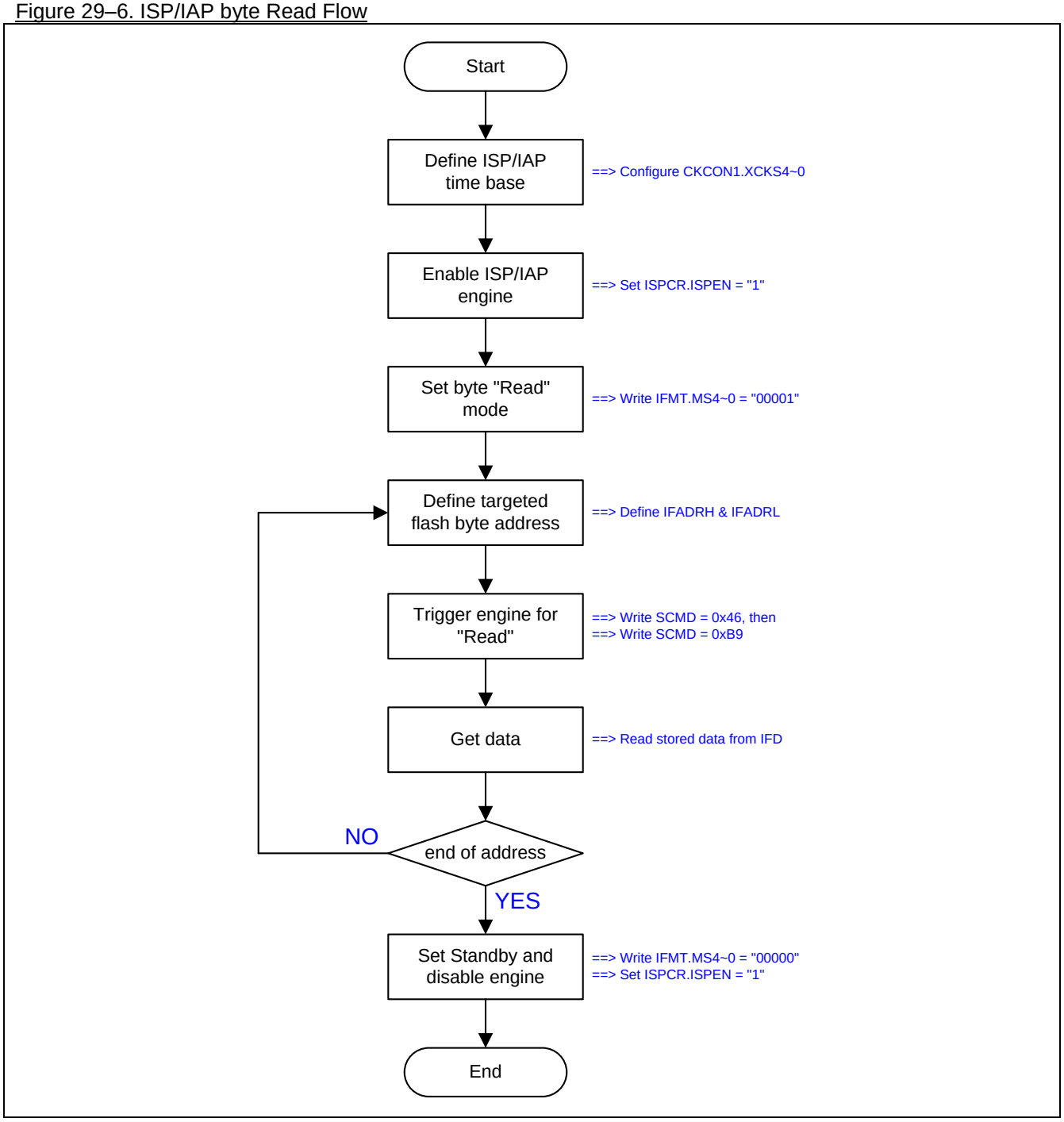

Figure 29–7 shows the demo code of the ISP/IAP byte read operation.

Figure 29–7. Demo Code for ISP/IAP byte Read

```
MOV    ISPCR,#00010111b ; XCKS4~0 = decimal 23 when OSCin = 24MHz

MOV    ISPCR,#10000011b ; ISPCR.7=1, enable ISP

MOV    IFMT,#01h        ; select Read Mode

MOV    IFADRH,??        ; fill [IFADRH,IFADRL] with byte address
MOV    IFADRL,??        ;

MOV    SCMD,#46h        ; trigger ISP/IAP processing
MOV    SCMD,#0B9h       ;

;Now, MCU will halt here until processing completed

MOV    A,IFD            ; now, the read data exists in IFD

MOV    IFMT,#00h        ; select Standby Mode
MOV    ISPCR,#00000000b ; ISPCR.7 = 0, disable ISP
```

29.3. ISP Operation

ISP means In-System-Programming which makes it possible to update the user's application program (in AP-memory) and non-volatile application data (in IAP-memory) without removing the MCU chip from the actual end product. This useful capability makes a wide range of field-update applications possible. The ISP mode is used in the *loader program* to program both the AP-memory and IAP-memory.

Note:

(1) Before using the ISP feature, the user should configure an ISP-memory space and pre-program the ISP code (boot loader program) into the ISP-memory by a universal Writer/Programmer or Megawin proprietary Writer/Programmer.

(2) ISP code in the ISP-memory can only program the AP-memory and IAP-memory.

After ISP operation has been finished, software writes "001" on ISPCR.7 ~ ISPCR.5 which triggers an software RESET and makes CPU reboot into application program memory (AP-memory) on the address 0x0000.

As we have known, the purpose of the ISP code is to program both AP-memory and IAP-memory. Therefore, ***the MCU must boot from the ISP-memory in order to execute the ISP code***. There are two methods to implement In-System Programming according to how the MCU boots from the ISP-memory.

29.3.1. Hardware approached ISP

To make the MCU directly boot from the ISP-memory when it is just powered on, the MCU's hardware options *HWBS* and *ISP Memory* must be enabled. The ISP entrance method by hardware option is named hardware approached. Once *HWBS* and *ISP Memory* are enabled, the MCU will always boot from the ISP-memory to execute the ISP code (boot loader program) when it is just powered on. The first thing the ISP code should do is to check if there is an ISP request. If there is no ISP requested, the ISP code should trigger a software reset (setting ISPCR.7~5 to "101" simultaneously) to make the MCU re-boot from the AP-memory to run the user's application program..

If the additional hardware option, HWBS2, is enabled with HWBS and ISP Memory, the MCU will always boot from ISP memory after power-on or **external reset finished**. It provides another hardware approached way to enter ISP mode by external reset signal. After first time power-on, **MG82FG5C64** can perform ISP operation by external reset trigger and doesn't wait for next time power-on, which suits the non-power-off system to apply the hardware approached ISP function.

29.3.2. Software approached ISP

The software approached ISP to make the MCU boot from the ISP-memory is to trigger a software reset while the MCU is running in the AP-memory. In this case, neither HWBS nor HWBS2 is enabled. The only way for the MCU to boot from the ISP-memory is to trigger a software reset, setting ISPCR.7~5 to "111" simultaneously, when running in the AP-memory. Note: the ISP memory must be configured a valid space by hardware option to reserve ISP mode for software approached ISP application.

29.3.3. Notes for ISP

Developing of the ISP Code

Although the ISP code is programmed in the ISP-memory that has an *ISP Start Address* in the MCU's Flash (see Figure 29–1 for **MG82FG5C64**), it doesn't mean you need to put this offset (**=** *ISP Start Address*) in your source code. The code offset is automatically manipulated by the hardware. User just needs to develop it like an application program in the AP-memory.

Interrupts during ISP

After triggering the ISP/IAP flash processing, the MCU will halt for a while for internal ISP processing until the processing is completed. At this time, the interrupt will queue up for being serviced if the interrupt is enabled previously. Once the processing is completed, the MCU continues running and the interrupts in the queue will be serviced immediately if the interrupt flag is still active. The user, however, should be aware of the following:

(1) Any interrupt can not be in-time serviced when the MCU halts for ISP processing.
(2) The low/high-level triggered external interrupts, nINTx, should keep activated until the ISP is completed, or they will be neglected.

ISP and Idle mode

MG82FG5C64 does not make use of idle-mode to perform ISP function. Instead, it freezes CPU running to release the flash memory for ISP/IAP engine operating. Once ISP/IAP operation finished, CPU will be resumed and advanced to the instruction which follows the previous instruction that invokes ISP/AP activity.

Accessing Destination of ISP

As mentioned previously, the ISP is used to program both the AP-memory and the IAP-memory. Once the accessing destination address is beyond that of the last byte of the IAP-memory, the hardware will automatically neglect the triggering of ISP processing. That is the triggering of ISP is invalid and the hardware does nothing.

Flash Endurance for ISP

The endurance of the embedded Flash is 20,000 erase/write cycles, that is to say, the erase-then-write cycles shouldn't exceed 20,000 times. Thus the user should pay attention to it in the application which needs to frequently update the AP-memory and IAP-memory.

29.4. In-Application-Programming (IAP)

The **MG82FG5C64** has built a function as *In Application Programmable* (IAP), which allows some region in the Flash memory to be used as non-volatile data storage while the application program is running. This useful feature can be applied to the application where the data must be kept after power off. Thus, there is no need to use an external serial EEPROM (such as 93C46, 24C01, .., and so on) for saving the non-volatile data.

In fact, the operating of IAP is the same as that of ISP except the Flash range to be programmed is different. The programmable Flash range for ISP operating is located within the AP and IAP memory, while the range for IAP operating is only located within the configured IAP-memory.

Note:

*(1) For **MG82FG5C64** IAP feature, the software should specify an IAP-memory space by writing IAPLB in IFMT defined. The IAP-memory space can be also configured by a universal Writer/Programmer or Megawin proprietary Writer/Programmer which configuration is corresponding to IAPLB initial value.*

*(2) The program code to execute IAP is located in the AP-memory and **just only** program IAP-memory **not** ISP-memory.*

29.4.1. IAP-memory Boundary/Range

If ISP-memory is specified, the range of the IAP-memory is determined by IAP and the ISP starts address as listed below.

IAP high boundary = ISP start address –1.
IAP low boundary = ISP start address - IAP.

If ISP-memory is not specified, the range of the IAP-memory is determined by the following formula.

IAP high boundary = 0x7FFF.
IAP low boundary = 0x7FFF – IAP + 1.

For example, if ISP-memory is 1K, so that ISP start address is 0x7C00, and IAP-memory is 1K, then the IAP-memory range is located at 0x7800 ~ 0x7BFF. The IAP low boundary in **MG82FG5C64** is defined by IAPLB register which can be modified by software to adjust the IAP size in user's AP program.

29.4.2. Update data in IAP-memory

The special function registers are related to ISP/IAP would be shown in Section "29.5 ISP/IAP Register".

Because the IAP-memory is a part of Flash memory, only ***Page Erase, no Byte Erase***, is provided for Flash erasing. To update "one byte" in the IAP-memory, users can not directly program the new datum into that byte. The following steps show the proper procedure:

Step 1: Save the whole page flash data (with 512 bytes) into XRAM buffer which contains the data to be updated.
Step 2: Erase this page ***(using ISP/IAP Flash Page Erase mode)***.
Step 3: Modify the new data on the byte(s) in the XRAM buffer.
Step 4: Program the updated data out of the XRAM buffer into this page ***(using ISP/IAP Flash Program mode)***.

To read the data in the IAP-memory, users can use the ***ISP/IAP Flash Read mode*** to get the targeted data.

29.4.3. Notes for IAP

Interrupts during IAP

After triggering the ISP/IAP flash processing for In-Application Programming, the MCU will halt for a while for internal IAP processing until the processing is completed. At this time, the interrupt will queue up for being serviced if the interrupt is enabled previously. Once the processing is completed, the MCU continues running and the interrupts in the queue will be serviced immediately if the interrupt flag is still active. Users, however, should be aware of the following:

(1) Any interrupt can not be in-time serviced during the MCU halts for IAP processing.
(2) The low/high-level triggered external interrupts, nINTx, should keep activated until the IAP is completed, or they will be neglected.

IAP and Idle mode

MG82FG5C64 does not make use of idle-mode to perform IAP function. Instead, it freezes CPU running to release the flash memory for ISP/IAP engine operating. Once ISP/IAP operation finished, CPU will be resumed and advanced to the instruction which follows the previous instruction that invokes ISP/AP activity.

Accessing Destination of IAP

As mentioned previously, the IAP is used to program only the IAP-memory. Once the accessing destination is not within the IAP-memory, the hardware will automatically neglect the triggering of IAP processing. That is the triggering of IAP is invalid and the hardware does nothing.

An Alternative Method to Read IAP Data

To read the Flash data in the IAP-memory, in addition to using the Flash Read Mode, the alternative method is using the instruction “MOVC A,@A+DPTR”. Where, DPTR and ACC are filled with the wanted address and the offset, respectively. And, the accessing destination must be within the IAP-memory, or the read data will be indeterminate. Note that using ‘MOVC’ instruction is much faster than using the Flash Read Mode.

Flash Endurance for IAP

The endurance of the embedded Flash is 20,000 erase/write cycles, that is to say, the erase-then-write cycles shouldn’t exceed 20,000 times. Thus the user should pay attention to it in the application which needs to frequently update the IAP-memory.

29.5. ISP/IAP Register

The following special function registers are related to the access of ISP, IAP and Page-P SFR:

IFD: ISP/IAP Flash Data Register

SFR Page = 0~F
SFR Address = 0xE2 RESET = 1111-1111

7	6	5	4	3	2	1	0
R/W	R/W	R/W	R/W	R/W	R/W	R/W	R/W

IFD is the data port register for ISP/IAP/Page-P operation. The data in IFD will be written into the desired address in operating ISP/IAP/Page-P write and it is the data window of readout in operating ISP/IAP read.

IFADRH: ISP/IAP Address for High-byte addressing

SFR Page = 0~F
SFR Address = 0xE3 RESET = 0000-0000

7	6	5	4	3	2	1	0
R/W	R/W	R/W	R/W	R/W	R/W	R/W	R/W

IFADRH is the high-byte address port for all ISP/IAP modes. It is not defined in Page-P mode.

IFADRL: ISP/IAP Address for Low-byte addressing

SFR Page = 0~F
SFR Address = 0xE4 RESET = 0000-0000

7	6	5	4	3	2	1	0
R/W	R/W	R/W	R/W	R/W	R/W	R/W	R/W

IFADRL is the low byte address port for all ISP/IAP/Page-P modes. In flash page erase operation, it is ignored.

IFMT: ISP/IAP Flash Mode Table

SFR Page = 0~F
SFR Address = 0xE5 RESET = xxxx-x000

7	6	5	4	3	2	1	0
MS.7	MS.6	MS.5	MS.4	MS.3	MS.2	MS.1	MS.0
R/W	R/W	R/W	R/W	R/W	R/W	R/W	R/W

Bit 7~4: Reserved. Software must write “0000_0” on these bits when IFMT is written.

Bit 3~0: ISP/IAP/Page-P operating mode selection

MS[7:0]	Mode
0 0 0 0-0 0 0 0	Standby
0 0 0 0-0 0 0 1	Flash byte read of AP/IAP-memory
0 0 0 0-0 0 1 0	Flash byte program of AP/IAP-memory
0 0 0 0-0 0 1 1	Flash page erase of AP/IAP-memory
0 0 0 0-0 1 0 0	**Page P SFR Write**
0 0 0 0-0 1 0 1	**Page P SFR Read**
Others	**Reserved**

IFMT is used to select the flash mode for performing numerous ISP/IAP function or to select page P SFR access.

SCMD: Sequential Command Data register

SFR Page = 0~F

SFR Address = 0xE6 RESET = xxxx-xxxx

7	6	5	4	3	2	1	0
SCMD							
R/W	R/W	R/W	R/W	R/W	R/W	R/W	R/W

SCMD is the command port for triggering ISP/IAP/Page-P activity. If SCMD is filled with sequential 0x46h, 0xB9h and if ISPCR.7 = 1, ISP/IAP/Page-P activity will be triggered.

ISPCR: ISP Control Register

SFR Page = 0~F

SFR Address = 0xE7 RESET = 0000-0xxx

7	6	5	4	3	2	1	0
ISPEN	SWBS	SWRST	CFAIL	MISPF	--	--	--
R/W	R/W	R/W	R/W	R/W	R/W	R/W	R/W

Bit 7: ISPEN, ISP/IAP/Page-P operation enable.
0: Global disable all ISP/IAP/Page-P program/erase/read function.
1: Enable ISP/IAP/Page-P program/erase/read function.

Bit 6: SWBS, software boot selection control.
0: Boot from main-memory after reset.
1: Boot from ISP memory after reset.

Bit 5: SWRST, software reset trigger control.
0: No operation
1: Generate software system reset. It will be cleared by hardware automatically.

Bit 4: CFAIL, Command Fail indication for ISP/IAP operation.
0: The last ISP/IAP command has finished successfully.
1: The last ISP/IAP command fails. It could be caused since the access of flash memory was inhibited.

Bit 3: MISPF, Megawin proprietary ISP Flag.
If user wants to execute the Megawin proprietary ISP function (USB DFU), user should not only set SWBS to select booting from ISP-memory, but also set this bit to trigger Megawin proprietary ISP operation before triggering software reset. If user just only sets a soft reset or perform IAP flow, must write “0” on this bit.

CKCON1: Clock Control Register 1

SFR Page = **0~F & P**

SFR Address = 0xBF RESET = 0x00-0000

7	6	5	4	3	2	1	0
XTOR	--	XCKS5	XCKS4	XCKS3	XCKS2	XCKS1	XCKS0
R	W	R/W	R/W	R/W	R/W	R/W	R/W

Bit 5~0: This is set the OSCin frequency value to define the time base of ISP/IAP programming. Fill with a proper value according to OSCin, as listed below.

[XCKS5~XCKS0] = OSCin – 1, w*here OSCin=1~40 (MHz).*

For examples,
(1) If OSCin=12MHz, then fill [XCKS5~XCKS0] with 11, i.e., 00-1011B.
(2) If OSCin=6MHz, then fill [XCKS5~XCKS0] with 5, i.e., 00-0101B.

OSCin	XCKS[5:0]
1MHz	00-0000
2MHz	00-0001
3MHz	00-0010

4MHz	00-0011
……	……
……	……
38MHz	10-0101
39MHz	10-0110
40MHz	10-0111

The default value of XCKS= 00-1011 for OSCin= 12MHz.

IAPLB: IAP Low Boundary

SFR Page = **Page P Only**

SFR Address = 0x03 RESET = 0111-000x

7	6	5	4	3	2	1	0
IAPLB							0
W	**W**	**W**	**W**	**W**	**W**	**W**	**W**

Bit 7~0: The IAPLB determines the IAP-memory lower boundary. Since a Flash page has 512 bytes, the IAPLB must be an even number.

To read IAPLB, MCU need to define the IMFT for mode selection on IAPLB Read and set ISPCR.ISPEN. And then write 0x46h & 0xB9h sequentially into SCMD. The IAPLB content is available in IFD. If write IAPLB, MCU will put new IAPLB setting value in IFD firstly. And then select IMFT, enable ISPCR.ISPEN and then set SCMD. The IAPLB content has already finished the updated sequence.

The range of the IAP-memory is determined by IAPLB and the ISP start address as listed below.

IAP lower boundary = IAPLB[7:0] x 256, and

IAP higher boundary = ISP start address – 1.

~~For example, if IAPLB=0x60 and ISP start address is 0x7000, then the IAP-memory range is located at 0x6000 ~ 0x6FFF.~~

Additional attention point, the IAP low boundary address must not be higher than ISP start address.

29.5.1. ISP/IAP Sample Code

The following Figure 29–8 shows a sample code for ISP operation.

Figure 29–8. Sample Code for ISP

```
;*******************************************************************************
; Demo Program for the ISP
;*******************************************************************************
IFD      DATA   0E2h
IFADRH   DATA   0E3h
IFADRL   DATA   0E4h
IFMT     DATA   0E5h
SCMD     DATA   0E6h
ISPCR    DATA   0E7h
;
       MOV    ISPCR,#10000000b  ;ISPCR.7=1, enable ISP

;===============================================================================
; 1. Page Erase Mode (512 bytes per page)
;===============================================================================
       ORL    IFMT,#03h     ;MS[2:0]=[0,1,1], select Page Erase Mode
       MOV    IFADRH,??     ;fill page address in IFADRH & IFADRL
       MOV    IFADRL,??     ;
       MOV    SCMD,#46h   ;trigger ISP processing
       MOV    SCMD,#0B9h  ;
       ;Now in processing...(CPU will halt here until complete)

;===============================================================================
; 2. Byte Program Mode
;===============================================================================
       ORL    IFMT,#02h     ;MS[2:0]=[0,1,0], select Byte Program Mode
       ANL    ISPCR,#0FAh  ;
       MOV    IFADRH,??     ;fill byte address in IFADRH & IFADRL
       MOV    IFADRL,??     ;
       MOV    IFD,??        ;fill the data to be programmed in IFD
       MOV    SCMD,#46h   ;trigger ISP processing
       MOV    SCMD,#0B9h  ;
       ;Now in processing...(CPU will halt here until complete)

;===============================================================================
; 3. Verify using Read Mode
;===============================================================================

       ANL    IFMT,#0F9h    ;MS1[2:0]=[0,0,1], select Byte Read Mode
       ORL    IFMT,#01h     ;
       MOV    IFADRH,??     ;fill byte address in IFADRH & IFADRL
       MOV    IFADRL,??     ;
       MOV    SCMD,#46h   ;trigger ISP processing
       MOV    SCMD,#0B9h  ;
       ;Now in processing...(CPU will halt here until complete)
       MOV    A,IFD       ;data will be in IFD
       CJNE   A,wanted,ISP_error ;compare with the wanted value
       ...
ISP_error:
       ...
;
```

30. Page P SFR Access

MG82FG5C64 builds a special SFR page (Page P) to store the control registers for MCU operation. These SFRs can be accessed by the ISP/IAP operation with different IFMT. In page P access, IFADRH must set to “00” and IFADRL indexes the SFR address in page P. If IFMT= 04H for Page P writing, the content in IFD will be loaded to the SFR in IFADRL indexed after the SCMD triggered. If IFMT = 05H for Page P reading, the content in IFD is stored the SFR value in IFADRL indexed after the SCMD triggered.

Following descriptions are the SFR function definition in Page P:

IAPLB: IAP Low Boundary

SFR Page = **P**

SFR Address = 0x03 RESET = 1111-111x

7	6	5	4	3	2	1	0
IAPLB							0
R/W	**R/W**	**R/W**	**R/W**	**R/W**	**R/W**	**R/W**	**R/W**

Bit 7~0: The IAPLB determines the IAP-memory lower boundary. Since a Flash page has 512 bytes, the IAPLB must be an even number.
To read IAPLB, MCU need to define the IFADRL for SFR address in Page-P, the IMFT for mode selection on Page-P Read and set ISPCR.ISPEN. And then write 0x46h & 0xB9h sequentially into SCMD. The IAPLB content is available in IFD. If write IAPLB, MCU will put new IAPLB setting value in IFD firstly. And index IFADRL, select IMFT, enable ISPCR.ISPEN and then set SCMD. The IAPLB content has already finished the updated sequence.

The range of the IAP-memory is determined by IAPLB and the ISP Start address as listed below.

IAP lower boundary = IAPLBx256, and
IAP higher boundary = ISP start address – 1.

For example, if IAPLB=0xE0 and ISP start address is 0xF000, then the IAP-memory range is located at 0xE000 ~ 0xEFFF.

Additional attention point, the IAP low boundary address must not be higher than ISP start address.

CKCON2: Clock Control Register 2

SFR Page = **P**

SFR Address = 0x40 RESET = 0101-0000

7	6	5	4	3	2	1	0
XTGS1	XTGS0	XTALE	IHRCOE	MCKS1	MCKS0	OSCS1	OSCS0
R/W	**R/W**	**R/W**	**R/W**	**R/W**	**R/W**	**R/W**	**R/W**

Bit 7~6: XTGS1~XTGS0, OSC Driving control Register. Default value is loaded from OSCDN1~0 in OR5.

XTGS1, XTGS0	Gain Define
0, 0	Lowest Gain
0, 1	Medium Low
1, 0	Medium High
1, 1	Highest Gain

Bit 5: XTALE, external Crystal(XTAL) Enable.
0: Disable XTAL oscillating circuit. In this case, XTAL2 and XTAL1 behave as Port 6.0 and Port 6.1.
1: Enable XTAL oscillating circuit. If this bit is set by CPU software, software pools the **XTOR** (CKCON1.7) **true** to indicate the crystal oscillator is ready for OSCin clock selected.

Bit 4: IHRCOE, Internal High frequency RC Oscillator Enable.
0: Disable internal high frequency RC oscillator.

1: Enable internal high frequency RC oscillator. If this bit is set by CPU software, it needs **32 us** to have stable output after IHRCOE is enabled.

Bit 3~2: MCKS[1:0], MCK Source Selection.

MCKS[1:0]	MCK Source Selection	OSCin =12MHz CKMIS = [01]	OSCin =11.059MHz CKMIS = [01]
0 0	OSCin	12MHz	11.059MHz
0 1	CKMI x 4 (ENCKM =1)	24MHz	22.118MHz
1 0	CKMI x 5.33 (ENCKM =1)	32MHz	29.491MHz
1 1	CKMI x 8 (ENCKM =1)	48MHz	44.236MHz

Bit 1~0: OSCS[1:0], OSCin Source selection.

OSCS[1:0]	OSCin source Selection
0 0	IHRCO
0 1	XTAL
1 0	ILRCO
1 1	ECKI, External Clock Input (P6.0) as OSCin.

CKCON3: Clock Control Register 3

SFR Page = **P**

SFR Address = 0x41 RESET = 0000-0010

7	6	5	4	3	2	1	0
--	--	FWKP	--	MCKD1	MCKD0	MCDS1	MCDS0
R/W	**R/W**	**R/W**	**R/W**	**R/W**	**R/W**	**R/W**	**R/W**

PCON2: Power Control Register 2

SFR Page = **P**

SFR Address = 0x44 POR = 0011-0101

7	6	5	4	3	2	1	0
AWBOD1	**0**	BO1S1	BO1S0	BO1RE	EBOD1	BO0RE	**1**
R/W	**R/W**	**R/W**	**R/W**	**R/W**	**R/W**	**R/W**	**R/W**

Bit 7: AWBOD1, Awaked BOD1 in PD mode.
0: BOD1 is disabled in power-down mode.
1: BOD1 keeps operation in power-down mode.

Bit 6: Reserved. Software must write “0” on this bit when PCON2 is written.

Bit 5~4: BO1S[1:0]. Brown-Out detector 1 monitored level Selection. The initial values of these two bits are loaded from OR1.BO1S1O and OR1.BO1S0O.

BO1S[1:0]	BOD1 detecting level
0 0	2.0V
0 1	2.4V
1 0	3.7V
1 1	4.2V

Bit 3: BO1RE, BOD1 Reset Enabled.
0: Disable BOD1 to trigger a system reset when BOF1 is set.
1: Enable BOD1 to trigger a system reset when BOF1 is set.

Bit 2: EBOD1, Enable BOD1 that monitors VDD power dropped at a BO1S1~0 specified voltage level.
0: Disable BOD1 to slow down the chip power consumption.
1: Enable BOD1 to monitor VDD power dropped.

Bit 1: BO0RE, BOD0 Reset Enabled.
0: Disable BOD0 to trigger a system reset when BOF0 is set.
1: Enable BOD0 to trigger a system reset when BOF0 is set (VDD meets 2.2V).

Bit 0: Reserved. Software must write "**1**" on this bit when PCON2 is written.

SPCON0: SFR Page Control 0

SFR Page = P
SFR Address = 0x48 POR = 0000-0000

7	6	5	4	3	2	1	0
RTCCTL	P6CTL	P4CTL	WRCTL	CKCTL1	CKCTL0	PWCTL1	PWCTL0
R/W	**R/W**	**R/W**	**R/W**	**R/W**	**R/W**	**R/W**	**R/W**

Bit 7: RTCCTL. RTCCR SFR access Control.
If RTCCTL is set, it will disable the RTCCR SFR modified in general Page. RTCCR in general Page only keeps the SFR read function. But software always owns the modification capability in SFR Page P.

Bit 6: P6CTL. P6 SFR access Control.
If P6CTL is set, it will disable the P6 SFR modified in Page 0~F. P6 in Page 0~F only keeps the SFR read function. But software always owns the modification capability in SFR Page P.

Bit 5: P4CTL. P4 SFR access Control.
If P4CTL is set, it will disable the P4 SFR modified in Page 0~F. P4 in Page 0~F only keeps the SFR read function. But software always owns the modification capability in SFR Page P.

Bit 4: WRCTL. WDTCR SFR access Control.
If WRCTL is set, it will disable the WDTCR SFR modified in Page 0~F. WDTCR in Page 0~F only keeps the SFR read function. But software always owns the modification capability in SFR Page P.

Bit 3: CKCTL1. CKCON1 SFR access Control.
If CKCTL1 is set, it will disable the CKCON1 SFR modified in Page 0~F. CKCON1 in Page 0~F only keeps the SFR read function. But software always owns the modification capability in SFR Page P.

Bit 2: CKCTL0. CKCON0 SFR access Control.
If CKCTL0 is set, it will disable the CKCON0 SFR modified in Page 0~F. CKCON0 in Page 0~F only keeps the SFR read function. But software always owns the modification capability in SFR Page P.

Bit 1: PWCTL1. PCON1 SFR access Control.
If PWCTL1 is set, it will disable the PCON1 SFR modified in Page 0~F. PCON1 in Page 0~F only keeps the SFR read function. But software always owns the modification capability in SFR Page P.

Bit 0: PWCTL0. PCON0 SFR access Control.
If PWCTL0 is set, it will disable the PCON0 SFR modified in Page 0~F. PCON0 in Page 0~F only keeps the SFR read function. But software always owns the modification capability in SFR Page P.

DCON0: Device Control 0

SFR Page = P
SFR Address = 0x4C RESET = 00xx-x011

7	6	5	4	3	2	1	0
HSE	IAPO	--	--	--	IORCTL	RSTIO	OCDE
R/W	**R/W**	**W**	**W**	**W**	**W**	**R/W**	**W**

Bit 7: HSE, High Speed operation Enable.
0: Disable high speed operation for MCU.
1: Enable high speed operation for MCU (SYSCLK > 24MHz). Before select high frequency clock (>24MHz) on SYSCLK, software must set HSE to switch internal circuit for high speed operation. It may cause more power consumption on chip operation.

Bit 6: IAPO, IAP function Only.
0: Maintain IAP region to service IAP function and code execution.
1: Disable the code execution in IAP region and the region only service IAP function.

Bit 5~3: Reserved. Software must write "**0**" on these bits when DCON0 is written.

Bit 2: IORCTL, GPIO Reset Control.
0: Port 6 keeps reset condition for all reset events.
1: If this bit is set, Port 6 is only reset by POR/LVR/Ext_Reset/BOR0/BOR1 (if BOR0/1 is enabled).

Bit 1: RSTIO, RST function on I/O,
0: Select I/O pad function for P47.
1: Select I/O pad function for external reset input, RST.

Bit 0: OCDE, OCD enable.
0: Disable OCD interface on P4.4 and P4.5
1: Enable OCD interface on P4.4 and P4.5.

31. Auxiliary SFRs

AUXR0: Auxiliary Register 0

SFR Page = 0~F

SFR Address = 0xA1 RESET = 0000-0000

7	6	5	4	3	2	1	0
P60OC1	P60OC0	P60FD	T0XL	P4FS1	P4FS0	INT1H	INT0H
R/W	R/W	R/W	R/W	R/W	R/W	R/W	R/W

Bit 7~6: P6.0 function configured control bit 1 and 0. The two bits only act when internal RC oscillator (IHRCO or ILRCO) is selected for system clock source. In crystal mode, XTAL2 and XTAL1 are the alternated function of P6.0 and P6.1. In external clock input mode, P6.0 is the dedicated clock input pin. In internal oscillator condition, P6.0 provides the following selections for GPIO or clock source generator. When P60OC[1:0] index to non-P6.0 GPIO function, P6.0 will drive the on-chip RC oscillator output to provide the clock source for other devices.

P60OC[1:0]	P60 function	I/O mode
00	P60	By P6M0.0
01	MCK	By P6M0.0
10	MCK/2	By P6M0.0
11	MCK/4	By P6M0.0

Please refer Section "8 System Clock" to get the more detailed clock information. For clock-out on P6.0 function, it is recommended to set P6M0.0 to "1" which selects P6.0 as push-push output mode.

Bit 5: P60FD, P6.0 Fast Driving.
0: P6.0 output with default driving.
1: P6.0 output with fast driving enabled. If P6.0 is configured to clock output, enable this bit when P6.0 output frequency is more than 12MHz at 5V application or more than 6MHz at 3V application.

Bit 4: T0XL is the Timer 0 per-scaler control bit. Please refer T0X12 (AUXR2.2) for T0XL function definition.

Bit 3~2: P4.4 and P4.5 alternated function selection.

P4FS[1:0]	P4.4	P4.5
00	P4.4	P4.5
01	RXD0	TXD0
10	T0/T0CKO	T1/T1CKO
11	T2EX	T2/T2CKO

Bit 1: INT1H, INT1 High/Rising trigger enable.
0: Remain nINT1 triggered on low level or falling edge on nINT1 port pin.
1: Set nINT1 triggered on high level or rising edge on nINT1 port pin.

Bit 0: INT0H, INT0 High/Rising trigger enable.
0: Remain nINT0 triggered on low level or falling edge on nINT0 port pin.
1: Set nINT0 triggered on high level or rising edge on nINT0 port pin.

AUXR1: Auxiliary Control Register 1

SFR Page = 0~F

SFR Address = 0xA2 RESET = 0000-0000

7	6	5	4	3	2	1	0
KBIPS1	KBIPS0	SPIPS0	S1PS1	S1PS0	T01PS0	EXTRAM	DPS
R/W	R/W	R/W	R/W	R/W	R/W	R/W	R/W

Bit 7~6: KBIPS1~0, KBI Port Selection [1:0].

KBIPS1~0	KBI.7~0
00	P0.7 ~ P0.0
01	P2.7 ~ P2.0
10	P5.7 ~ P5.0

11	P4.3~P4.0, P3.7~P3.4

Bit 5: SPIPS0, SPI Port Selection 0.

SPIPS0	nSS	MOSI	MISO	SPICLK	SPID2	SPID3
0	P1.4	P1.5	P1.6	P1.7	P5.3	P5.4
1	P4.3	P4.2	P4.1	P4.0	P3.6	P3.7

Bit 4~3: S1PS1~0, Serial Port 1 (UART1) Port Selection [1:0]

S1PS2	S1PS1~0	RXD1	TXD1
0	00	P1.2	P1.3
0	01	P3.2	P3.3
0	10	P0.6	P0.7
0	11	P0.0	P0.5
1	xx	P7.0	P7.1

Bit 2: T01PS0, Timer0/1 Port Selection 0.

T01PS0	T0/T0CKO	T1/T1CKO
0	P3.4	P3.5
1	P5.5	P5.6

Bit 1: EXTRAM, External data RAM enable.
0: Enable on-chip expanded data RAM (XRAM **3840** bytes) on XRAM access.
1: Disable on-chip expanded data RAM on XRAM access.

Bit 0: DPS, DPTR select bit. Use to switch between DPTR0 and DPTR1.
0: Select DPTR0.
1: Select DPTR1.

DPS	Selected DPTR
0	DPTR0
1	DPTR1

AUXR2: Auxiliary Register 2

SFR Page = 0~F
SFR Address = 0xA3 RESET = 0000-0000

7	6	5	4	3	2	1	0
ALEINV	ADDRO	--	--	T1X12	T0X12	T1CKOE	T0CKOE
R/W	**R/W**	**W**	**W**	**R/W**	**R/W**	**R/W**	**R/W**

Bit 7: ALEINV, ALE inverted output.
0: Keep ALE as high pulse active.
1: Change ALE to low pulse active.

Bit 6: ADDRO, Address output on external memory access cycle.
0: Disable the address output on external memory access cycle.
1: Enable the address output on external memory access cycle when EMAI.1~0 is equal to “11” only.

ADDRO	P5.7~0	P6.7~2	P7.1~0
0	P5.7~0	P6.7~2	P7.1~0
1	ADD[7:0]	ADD[15:10]	ADD[9:8]

Bit 5~4: Reserved. Software must write “**0**” on these bits when AUXR2 is written.

Bit 3: T1X12, Timer 1 clock source selector while C/T=0.
0: Clear to select SYSCLK/12.
1: Set to select SYSCLK as the clock source.

Bit 2: T0X12, Timer 1 clock source selector while C/T=0.
0: Clear to select SYSCLK/12.
1: Set to select SYSCLK as the clock source.

Bit 1: T1CKOE, Timer 1 Clock Output Enable.
0: Disable Timer 1 clock output.
1: Enable Timer 1 clock output on P3.5.

Bit 0: T0CKOE, Timer 0 Clock Output Enable.
0: Disable Timer 0 clock output.
1: Enable Timer 0 clock output on P3.4.

AUXR3: Auxiliary Register 3

SFR Page = **0 only**
SFR Address = 0xA4 RESET = 0000-0000

7	6	5	4	3	2	1	0
STAF	STOF	BPOC1	BPOC0	ALEPS0	TWIPS1	TWIPS0	T2PS0
R/W	**R/W**	**R/W**	**R/W**	**R/W**	**R/W**	**R/W**	**R/W**

Bit 7: STAF, Start Flag detection of STWI.
0: Clear by firmware by writing “0” on it.
1: Set by hardware to indicate the START condition occurred on STWI bus.

Bit 6: STOF, Stop Flag detection of STWI.
0: Clear by firmware by writing “0” on it.
1: Set by hardware to indicate the START condition occurred on STWI bus.

Bit 5~4: BPOC1~0, Beeper output control bits.

BPOC[1:0]	P4.4 function	I/O mode
00	P4.4	By P4M0.4
01	ILRCO/64	By P4M0.4
10	ILRCO/32	By P4M0.4
11	ILRCO/16	By P4M0.4

For beeper on P4.4 function, it is recommended to set P4M0.4 to “1” which selects P4.4 as push-push output mode.

Bit 3: ALEPS0, ALE port selection 0.

ALEPS0	ALE
0	P4.6
1	P4.7

Bit 2~1: TWIPS1~0, TWSI Port Selection [1:0].

TWIPS1~0	TWI_SCL	TWI_SDA
00	P4.0	P4.1
01	P6.0	P6.1
10	P3.0	P3.1
11	P3.4	P3.5

Bit 0: T2PS0, Timer 2 Port Selection 0.

T2PS0	T2/T2CKO	T2EX
0	P1.0	P1.1
1	P3.6	P3.7

AUXR4: Auxiliary Register 4

SFR Page = **1 only**
SFR Address = 0xA4 RESET = 0000-0000

7	6	5	4	3	2	1	0
C1IC2S1	C1IC2S0	C1IC0S1	C1IC0S0	AC1OE	AC1FLT1	AC0OE	AC0FLT1
R/W	**R/W**	**R/W**	**R/W**	**R/W**	**R/W**	**R/W**	**R/W**

Bit 7~6: C1IC2S1~0, PCA1 Input Channel 2 input Selection.

C1IC2S1~0	C1EX2 input
00	C1EX2 Port Pin
01	AC1OUT
10	--
11	AC0OUT

Bit 5~4: C1IC0S1~0, PCA1 Input Channel 0 input Selection.

C1IC0S1~0	C1EX0 input
00	C1EX0 Port Pin
01	AC0OUT
10	--
11	ILRCO

Bit 3: AC1OE, AC1OUT output enable on port pin.
0: Disable AC1OUT output on port pin.
1: Enable AC1OUT output on P7.2.

Bit 1: AC0OE, AC0OUT output enable on port pin.
0: Disable AC0OUT output on port pin.
1: Enable AC0OUT output on P0.0.

AUXR5: Auxiliary Register 5

SFR Page = **2 only**
SFR Address = 0xA4 RESET = 0000-0000

7	6	5	4	3	2	1	0
SnMIPS	S3PS0	S2PS0	C1PPS0	T0OPS0	T4PS0	T3PS1	T3PS0
R/W	**R/W**	**R/W**	**R/W**	**R/W**	**R/W**	**R/W**	**R/W**

Bit 7: SnMIPS, {S0MI, S1MI, S2MI, S3MI} Port Selection.

SnMIPS	S0MI	S1MI	S2MI	S3MI
0	P4.0	P4.1	P4.2	P4.3
1	P5.3	P5.4	P5.5	P5.6

Bit 6: S3PS0, Serial Port 3 (UART3) Port Selection 0.

S3PS0	RXD3	TXD3
0	P3.6	P3.7
1	P6.5	P6.6

Bit 5: S2PS0, Serial Port 2 (UART2) Port Selection 0.

S2PS0	RXD2	TXD2
0	P3.2	P3.3
1	P5.7	P6.7

Bit 4: C1PPS0, {C1PWM0A, C1PWM0B, C1PWM2A, C1PWM2B} Port Selection 0.

C1PPS0	C1PWM0A	C1PWM0B	C1PWM2A	C1PWM2B
0	P3.4	P3.5	P3.6	P3.7
1	P6.0	P6.1	P6.2	P6.3

Bit 3: T0OPS0, Timer 0 Clock Output Port Selection 0.

T0OPS0	T0CKOA	T0CKOB
0	P4.2	P4.3
1	P5.0	P5.1

Bit 2: T4PS0, Timer 4 port selection0.

T4PS0	T4/T4CKO	T4EX
0	P7.0	P7.1
1	P4.2	P4.3

Bit 1~0: T3PS1~0, Timer 3 Port Selection [1:0].

T3PS1~0	T3/T3CKO	T3EX
00	P4.6	P7.2
01	P4.0	P4.1
10	P2.1	P2.0
11	P6.7	P5.7

AUXR6: Auxiliary Register 6

SFR Page = **3 only**

SFR Address = 0xA4 RESET = 0000-0000

7	6	5	4	3	2	1	0
--	--	TWI1PS1	TWI1PS0	C1IC4S0	C1PS0	PCAPS0	S1PS2
W	**W**	**R/W**	**R/W**	**R/W**	**R/W**	**R/W**	**R/W**

Bit 7~6: Reserved. Software must write "**0**" on these bits when AUXR6 is written.

Bit 5~4: TWI1PS1~0, TWI1 Port Selection [1:0].

TWI1PS1~0	TWI1_SCL	TWI1_SDA
00	P4.2	P4.3
01	P6.2	P6.3
10	P3.2	P3.3
11	P0.3	P0.4

Bit 7~6: C1IC4S0, PCA1 Input Channel 4 input Selection.

C1IC4S0	C1EX4 input
0	C1EX4 Port Pin
1	AC2OUT

Bit 2: C1PS0, PCA1 Port Selection 0.

C1PS0	C1EX0	C1EX1	C1EX2	C1EX3	C1EX4	C1EX5
0	P6.2	P6.5	P6.3	P6.6	P6.4	P6.7
1	P3.6	P4.1	P3.7	P4.2	P4.0	P4.3

Bit 1: PCAPS0, PCA Port Selection 0.

PCAPS0	ECI	CEX0	CEX1	CEX2	CEX3	CEX4	CEX5
0	P2.1	P2.2	P2.3	P2.4	P2.5	P2.6	P2.7
1	P0.0	P3.4	P3.5	P4.0	P4.1	P4.2	P4.3

Bit 0: S1PS2, Serial Port 1 (UART1) Port Selection [2]

S1PS2	S1PS1~0	RXD1	TXD1
0	00	P1.2	P1.3
0	01	P3.2	P3.3
0	10	P0.6	P0.7
0	11	P0.0	P0.5
1	xx	P7.0	P7.1

AUXR7: Auxiliary Register 7

SFR Page = **4 only**

SFR Address = 0xA4 RESET = 0000-0000

7	6	5	4	3	2	1	0
GF	PBKS5	PBKS4	PBKS3	GF	GF	AC2OE	AC2FLT1
R/W	**R/W**	**R/W**	**R/W**	**R/W**	**R/W**	**R/W**	**R/W**

Bit 1: AC2OE, AC2OUT output enable on port pin.
0: Disable AC2OUT output on port pin.
1: Enable AC2OUT output on P6.4.

XICFG: External Interrupt Configured Register

SFR Page = **0 only**

SFR Address = 0xC1 RESET = 0000-0000

7	6	5	4	3	2	1	0
INT1IS.1	INT1IS.0	INT0IS.1	INT0IS.0	X3FLT	X2FLT	X1FLT	X0FLT
R/W	**R/W**	**R/W**	**R/W**	**R/W**	**R/W**	**R/W**	**R/W**

Bit 7~6: INT1IS.1~0, nINT3 input selection bits which function is defined as following table.

INT1IS.1~0	Selected Port Pin of nINT1
00	P3.3
01	P3.1
10	P1.7
11	P4.1

Bit 5~4: INT0IS.1~0, nINT0 input selection bits which function is defined as following table.

INT0IS.1~0	Selected Port Pin of nINT0
00	P3.2
01	P3.0
10	P1.6
11	P4.0

XICFG1: External Interrupt Configured 1 Register

SFR Page = **1 only**

SFR Address = 0xC1 RESET = 0000-0000

7	6	5	4	3	2	1	0
INT3IS.1	INT3IS.0	INT2IS.1	INT2IS.0	X3FLT1	X2FLT1	X1FLT1	X0FLT1
R/W	**R/W**	**R/W**	**R/W**	**R/W**	**R/W**	**R/W**	**R/W**

Bit 7~6: INT3IS1~0, nINT3 input selection bits which function is defined as following table.

INT3IS.1~0	Selected Port Pin of nINT3
00	P4.2
01	P6.3
10	P1.5
11	P6.0

Bit 5~4: INT2IS1~0, nINT2 input selection bits which function is defined as following table.

INT2IS.1~0	Selected Port Pin of nINT2
00	P4.3
01	P6.2
10	P1.4
11	P6.1

SFRPI: SFR Page Index Register

SFR Page = **0~F & P**

SFR Address = 0xAC RESET = xxxx-0000

7	6	5	4	3	2	1	0
--	--	--	--	PIDX3	PIDX2	PIDX1	PIDX0
W	**W**	**W**	**W**	**R/W**	**R/W**	**R/W**	**R/W**

Bit 7~4: Reserved. Software must write “0” on these bits when SFRPI is written.

Bit 3~0: SFR Page Index. The available pages are only page **“0” and “1”**.
There are 13 register sets in Page 0, S0CON(98H), S0BUF(99H), S0CFG(9AH), S1CFG(9BH), PUCON0(B4H), P5M0(B5H), T2CON(C8H), T2MOD(C9H), RCAP2L(CAH), RCAP2H(CBH), TL2(CCH), TH2(CDH) and P5(F8H).
13 register sets in Page 1, S1CON(98H), S1BUF(99H) and S1BRT(9AH), S1BRC(9BH), PUCON1(B4H), P6M0(B5H), T3CON(C8H), T3MOD(C9H), RCAP3L(CAH), RCAP3H(CBH), TL3(CCH), TH3(CDH) and P6(F8H).

PIDX[3:0]	Selected Page
0000	Page 0
0001	Page 1
0010	Page 2
0011	Page 3
……	……
……	……
……	……
1111	Page F

32. Hardware Option

The MCU's Hardware Option defines the device behavior which cannot be programmed or controlled by software. The hardware options can only be programmed by a Universal Programmer, the "Megawin 8051 Writer U1" or the "Megawin 8051 ICE Adapter" (The ICE adapter also supports ICP programming function. Refer Section "33.5 In-Chip-Programming Function"). After whole-chip erased, all the hardware options are left in "disabled" state and there is no ISP-memory and IAP-memory configured. The **MG82FG5C64** has the following Hardware Options:

LOCK:
☑: Enabled. Code dumped on a universal Writer or Programmer is locked to 0xFF for security.
☐: Disabled. Not locked.

ISP-memory Space:
The ISP-memory space is specified by its starting address. And, its higher boundary is limited by the Flash end address, i.e., 0x7FFF. The following table lists the ISP space option in this chip. In default setting, MG82FG5C64 ISP space is configured to 2.5K that had been embedded Megawin proprietary COMBO ISP code to perform device firmware upgrade through Megawin 1-Line ISP protocol and COM port ISP.

ISP-memory Size	ISP Start Address
4K bytes	
3.5K bytes	
3K bytes	
2.5K bytes	
2K bytes	
1.5K bytes	
1K bytes	
No ISP Space	--

HWBS:
☑: Enabled. When powered up, MCU will boot from ISP-memory if ISP-memory is configured.
☐: Disabled. MCU always boots from AP-memory.

HWBS2:
☑: Enabled. Not only power-up but also any reset will cause MCU to boot from ISP-memory if ISP-memory is configured.
☐: Disabled. Where MCU boots from is determined by HWBS.

IAP-memory Space:
The IAP-memory space specifies the user defined IAP space. The IAP-memory Space can be configured by hardware option or MCU software by modifying IAPLB. In default, it is configured to **2.5K** bytes.

BO1S1O, BO1S0O:
☑,☑: Select BOD1 to detect 2.0V.
☑,☐: Select BOD1 to detect 2.4V.
☐,☑: Select BOD1 to detect 3.7V.
☐,☐: Select BOD1 to detect 4.2V.

BO0REO:
☑: Enabled. BOD0 will trigger a RESET event to CPU on AP program start address. (2.2V)
☐: Disabled. BOD0 can not trigger a RESET to CPU.

BO1REO:
☑: Enabled. BOD1 will trigger a RESET event to CPU on AP program start address. (4.2V, 3.7V, 2.4V or 2.0V)
☐: Disabled. BOD1 can not trigger a RESET to CPU.

WRENO:

☑: Enabled. Set WDTCR.WREN to enable a system reset function by WDTF.
☐: Disabled. Clear WDTCR.WREN to disable the system reset function by WDTF.

NSWDT: Non-Stopped WDT
☑: Enabled. Set WDTCR.NSW to enable the WDT running in power down mode (watch mode).
☐: Disabled. Clear WDTCR.NSW to disable the WDT running in power down mode (disable Watch mode).

HWENW: Hardware loaded for "ENW" of WDTCR.
☑: Enabled. Enable WDT and load the content of WRENO, NSWDT, HWWIDL and HWPS2~0 to WDTCR after power-on.
☐: Disabled. WDT is not enabled automatically after power-on.

HWWIDL, HWPS2, HWPS1, HWPS0:
When HWENW is enabled, the content on these four fused bits will be loaded to WDTCR SFR after power-on.

WDSFWP:
☑: Enabled. The WDT SFRs, WREN, NSW, WIDL, PS2, PS1 and PS0 in WDTCR, will be write-protected.
☐: Disabled. The WDT SFRs, WREN, NSW, WIDL, PS2, PS1 and PS0 in WDTCR, are free for writing of software.

33. Application Notes

33.1. Power Supply Circuit

To have the **MG82FG5C64** work with power supply varying from 2.0V to 5.5V, adding some external decoupling and bypass capacitors is necessary, as shown in Figure 33–1.

Figure 33–1. Power Supplied Circuit

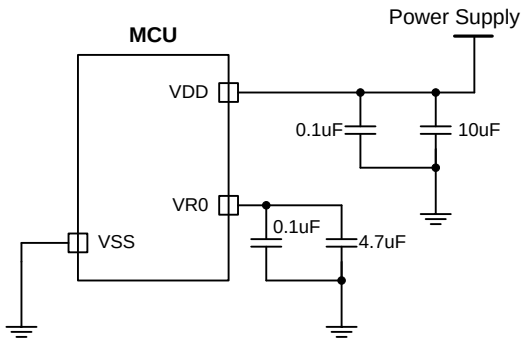

33.2. Reset Circuit

Normally, the power-on reset can be successfully generated during power-up. However, to further ensure the MCU a reliable reset during power-up, the external reset is necessary. Figure 33–2 shows the external reset circuit, which consists of a capacitor C_{EXT} connected to VDD (power supply) and a resistor R_{EXT} connected to VSS (ground).

In general, R_{EXT} is optional because the RST pin has an internal pull-down resistor (R_{RST}). This internal diffused resistor to VSS permits a power-up reset using only an external capacitor C_{EXT} to VDD.

See Section "34.2 DC Characteristics" for R_{RST} value.

Figure 33–2. Reset Circuit

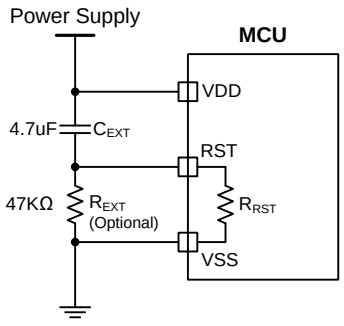

33.3. XTAL Oscillating Circuit

To achieve successful and exact oscillating (up to 24MHz), the capacitors C1 and C2 are necessary, as shown in Figure 33–3. Normally, C1 and C2 have the same value. Table 33–1 lists the C1 & C2 value for the different frequency crystal application.

Figure 33–3. XTAL Oscillating Circuit

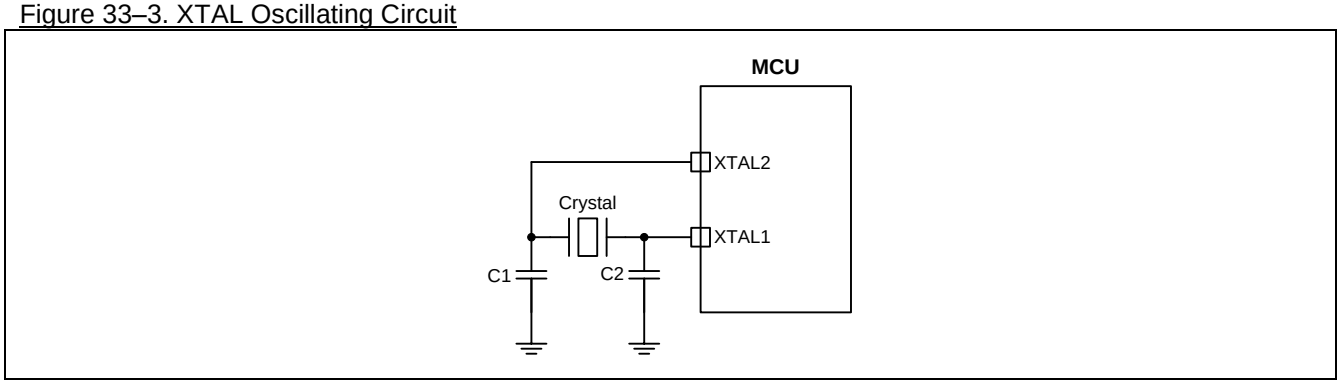

Table 33–1. Reference Capacitance of C1 & C2 for crystal oscillating circuit

Crystal	C1, C2 Capacitance
16MHz ~ 25MHz	10pF
6MHz ~ 16MHz	15pF
2MHz ~ 6MHz	33pF

33.4. ICP and OCD Interface Circuit

MG82FG5C64 devices include an on-chip Megawin proprietary debug interface to allow In-Chip-Programming (ICP) and in-system On-Chip-Debugging (OCD) with the production part installed in the end application. The ICP and OCD share the same interface to use a clock signal (ICP_SCL/OCD_SCL) and a bi-directional data signal (ICP_SDA/OCD_SDA) to transfer information between the device and a host system.

The ICP interface allows the ICP_SCL/ICP_SDA pins to be shared with user functions so that In-Chip Flash Programming function could be performed. This is practicable because ICP communication is performed when the device is in the halt state, where the on-chip peripherals and user software are stalled. In this halted state, the ICP interface can safely 'borrow' the ICP_SCL (P4.4) and ICP_SDA (P4.5) pins. In most applications, external resistors are required to isolate ICP interface traffic from the user application. A typical isolation configuration is shown in Figure 33–4.

It is strongly recommended to build the ICP interface circuit on target system. It will reserve the whole capability for software programming and device options configured.

After power-on, the P4.4 and P4.5 of MG82FG5C64 are configured to OCD_SCL/OCD_SDA for in-system On-Chip-Debugging function. This is possible because OCD communication is typically performed when the CPU is in the halt state, where the user software is stalled. In this halted state, the OCD interface can safely 'use' the OCD_SCL (P4.4) and OCD_SDA (P4.5) pins. As mentioned ICP interface isolation in Figure 33–4, external resistors are required to isolate OCD interface traffic from the user application.

If user gives up the OCD function, software can configure the OCD_SCL and OCD_SDA to port pins: P4.4 and P4.5 by clearing OCDE on bit 0 of PCON3. When user would like to regain the OCD function, user can predict an event that triggers the software to switch the P4.4 and P4.5 back to OCD_SCL and OCD_SDA by setting OCED as "1". Or "Erase" the on-chip flash by ICP which cleans the user software to stop the port pins switching.

Figure 33–4. ICP and OCD Interface Circuit

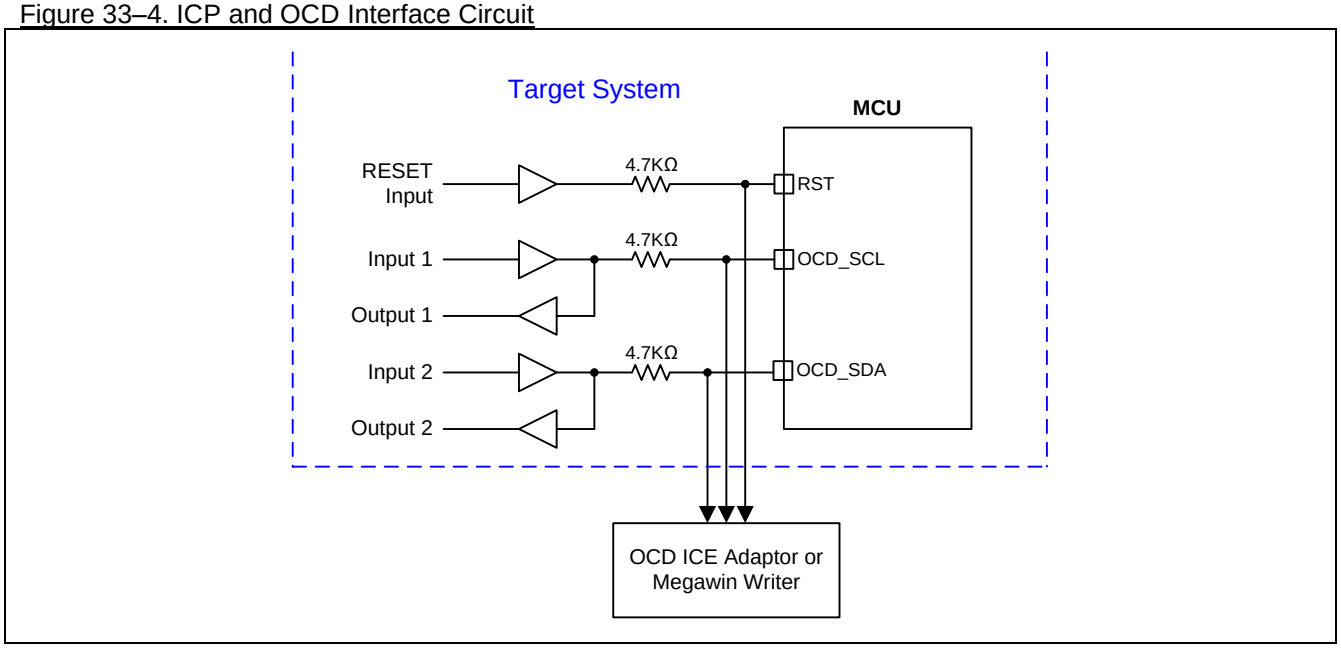

33.5. In-Chip-Programming Function

The ICP, like the traditional parallel programming method, can be used to program anywhere in the MCU, including the Flash and MCU's Hardware Option. And, owing to its dedicated serial programming interface (via the On-Chip Debug path), the ICP can update the MCU without removing the MCU chip from the actual end product, just like the ISP does.

The proprietary 6-pin "Megawin 8051 ICE Adapter" can support the In-Circuit Programming of MG82FG5C64. "Megawin 8051 ICE Adapter" has the in-system storage to store the user program code and device options. So, the tools can perform a portable and stand-alone programming without a host on-line, such as connecting the tool to PC. Following lists the features of the ICP function:

Features

- No need to have a loader program pre-programmed in the target MCU.
- Dedicated serial interface; no port pin is occupied.
- The target MCU needn't be in running state; it just needs to be powered.
- Capable of portable and stand-alone working without host's intervention.

The above valuable features make the ICP function very friendly to the user. Particularly, it is capable of stand-alone working after the programming data is downloaded. This is especially useful in the field without a PC. The system diagrams of the ICP function for the stand-alone programming are shown in Figure 33–5. Only **five** pins are used for the ICP interface: the SDA line and SCL line function as serial data and serial clock, respectively, to transmit the programming data from the 6-pin "Megawin 8051 ICE Adapter" to the target MCU; the RST line to halt the MCU, and the VCC & GND are the power supply entry of the 6-pin "Megawin 8051 ICE Adapter" for portable programming application. The USB connector can be directly plugged into the PC's USB port to download the programming data from PC to the 6-pin "Megawin 8051 ICE Adapter".

Figure 33–5. Stand-alone programming via ICP

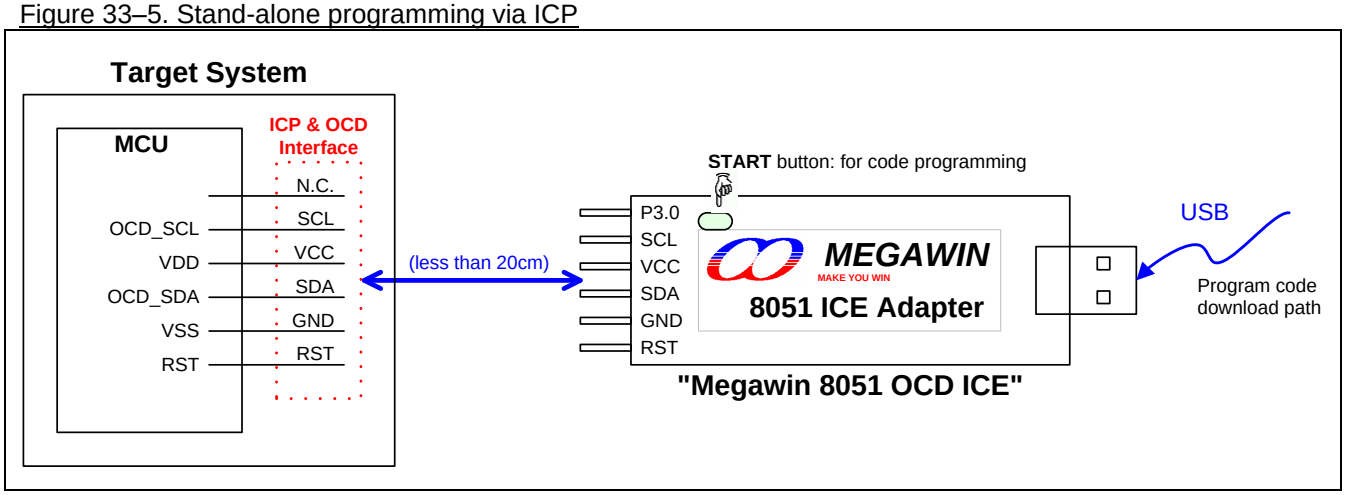

33.6. On-Chip-Debug Function

The **MG82FG5C64** is equipped with a Megawin proprietary On-Chip Debug (OCD) interface for In-Circuit Emulator (ICE). The OCD interface provides on-chip and in-system non-intrusive debugging without any target resource occupied. Several operations necessary for an ICE are supported, such as Reset, Run, Stop, Step, Run to Cursor and Breakpoint Setting.

Using the OCD technology, Megawin provides the “Megawin 8051 OCD ICE” for the user, as shown in Figure 33–6. The user has no need to prepare any development board during developing, or the socket adapter used in the traditional ICE probe. All the thing the user needs to do is to reserve a 6-pin connector on the system for the dedicated OCD interface: P3.0, RST, VCC, OCD_SDA, OCD_SCL and GND as shown in Figure 33–6.

In addition, the most powerful feature is that it can directly connect the user’s target system to the Keil 8051 IDE software for debugging, which directly utilizes the Keil IDE’s dScope-Debugger function. Of course, all the advantages are based on your using Keil 8051 IDE software.

Note: “Keil” is the trade mark of “Keil Elektronik GmbH and Keil Software, Inc.”.

Features

- Megawin proprietary OCD (On-Chip-Debug) technology
- On-chip & in-system real-time debugging
- 5-pin dedicated serial interface for OCD, no target resource occupied
- Directly linked to the debugger function of the Keil 8051 IDE Software
- USB connection between target and host (PC)
- Helpful debug actions: Reset, Run, Stop, Step and Run to Cursor
- Programmable breakpoints, up to 4 breakpoints can be inserted simultaneously
- Several debug-helpful windows: Register/Disassembly/Watch/Memory Windows
- Source-level (Assembly or C-language) debugging capability

Figure 33–6. System Diagram for the ICE Function

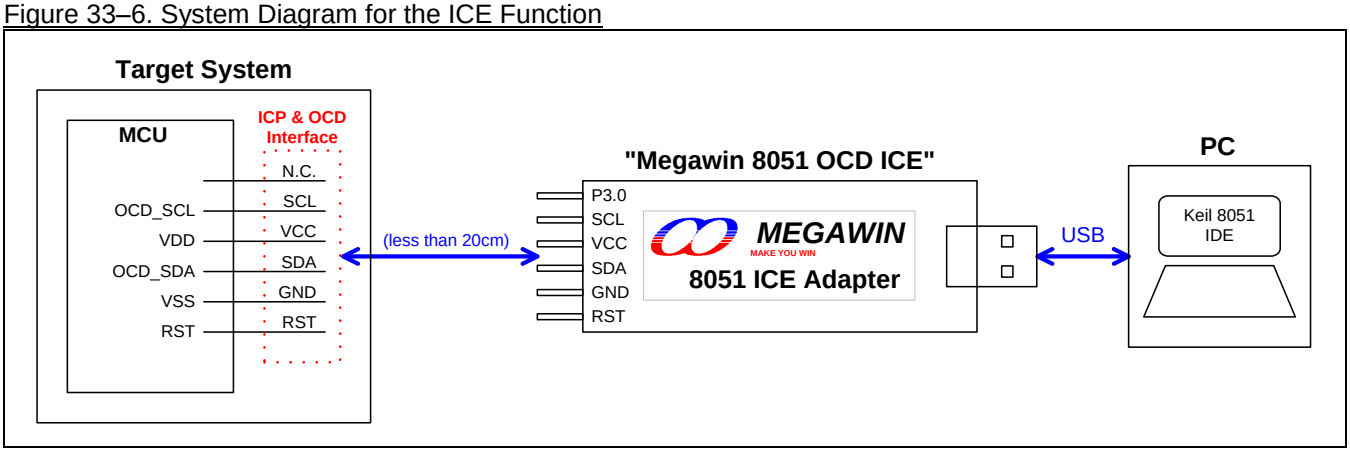

Note: For more detailed information about the OCD ICE, please feel free to contact Megawin.

34. Electrical Characteristics

34.1. Absolute Maximum Rating

Parameter	Rating	Unit
Ambient temperature under bias	-40 ~ +85	°C
Storage temperature	-65 ~ + 150	°C
Voltage on any Port I/O Pin or RST with respect to VSS	-0.5 ~ VDD + 0.5	V
Voltage on VDD with respect to VSS	-0.5 ~ +6.0	V
Maximum total current through VDD and VSS	200	mA
Maximum output current sunk by any Port pin	40	mA

*Note: stresses above those listed under “Absolute Maximum Ratings” may cause permanent damage to the device. This is a stress rating only and functional operation of the devices at those or any other conditions above those indicated in the operation listings of this specification is not implied. Exposure to maximum rating conditions for extended periods may affect device reliability.

34.2. DC Characteristics

VDD = 5.0V±10%, VSS = 0V, T_A = 25°C and execute NOP for each machine cycle, unless otherwise specified

Symbol	Parameter	Test Condition	Limits			Unit
			min	typ	max	
Input/Output Characteristics						
V_{IH1}	Input High voltage (All I/O Ports)	Except P6.0, P6.1, RST(P4.7)	0.6			VDD
V_{IH2}	Input High voltage	P6.0, P6.1, RST(P4.7)	0.75			VDD
V_{IL1}	Input Low voltage (All I/O Ports)	Except P6.0, P6.1, RST(P4.7)			0.15	VDD
V_{IL2}	Input Low voltage	P6.0, P6.1, RST(P4.7)			0.2	VDD
I_{IH}	Input High Leakage current (All I/O Ports)	V_{PIN} = VDD		0	10	uA
I_{IL1}	Logic 0 input current (P3 in quasi-mode)	V_{PIN} = 0.4V		20	50	uA
I_{IL2}	Logic 0 input current (All Input only or open-drain Ports)	V_{PIN} = 0.4V		0	10	uA
I_{H2L}	Logic 1 to 0 input transition current (P3 in quasi-mode)	V_{PIN} =1.8V		320	500	uA
I_{OH0}	Output High current (P3 in quasi-Mode)	V_{PIN} =2.4V	150	200		uA
I_{OH1}	Output High current (All push-pull output ports)	V_{PIN} =2.4V	12			mA
I_{OL1}	Output Low current (All I/O Ports)	V_{PIN} =0.4V	12			mA
I_{OH2}	Output High current (All push-pull output ports)	V_{PIN} =2.4V, except P6.0, P6.1, P4.7	2			mA
I_{OL2}	Output Low current (All I/O Ports)	V_{PIN} =0.4V, except P6.0, P6.1, P4.7	2			mA
R_{RST}	Internal reset pull-down resistance			110		Kohm
Power Consumption						
I_{OP1}	Normal mode operating current	SYSCLK = 32MHz @ IHRCO with PLL		7		mA
I_{OP2}		SYSCLK = 24MHz @ IHRCO with PLL		5.6		mA
I_{OP3}		SYSCLK = 12MHz @ IHRCO		3		mA
I_{OP4}		SYSCLK = 12MHz @ IHRCO with ADC				mA
I_{OP5}		SYSCLK = 24MHz @ XTAL		6.2		mA
I_{OP6}		SYSCLK = 12MHz @ XTAL		4		mA
I_{OP7}		SYSCLK = 6MHz @ XTAL		2.7		mA
I_{OP8}		SYSCLK = 2MHz @ XTAL		1.7		mA
I_{OPS1}	Slow mode operating current	SYSCLK = 12MHz/128 @ IHRCO		0.5		mA
I_{OPS2}		SYSCLK = 12MHz/128 @ XTAL		1.4		mA
I_{IDLE1}	Idle mode operating current	SYSCLK = 12MHz @ IHRCO		1.4		mA
I_{IDLE2}		SYSCLK = 12MHz @ XTAL		2.3		mA
I_{IDLE3}		SYSCLK = 12MHz/128 @ IHRCO		0.47		mA

I_{IDLE4}		SYSCLK = 12MHz/128 @ XTAL		1.37		mA
I_{IDLE5}		SYSCLK = 32KHz @ ILRCO		110		uA
I_{SUB1}	Sub-clock mode operating current	SYSCLK = 32KHz @ ILRCO, BOD1 disabled		115		uA
I_{SUB2}		SYSCLK = 32KHz/128 @ ILRCO, BOD1 disabled		105		uA
I_{WAT}	Watch mode operating current	WDT = 32KHz @ ILRCO in PD mode		4		uA
I_{MON1}	Monitor Mode operating current	BOD1 enabled in PD mode		14		uA
I_{RTC1}	RTC Mode operating current	RTC operating in PD mode, VDD = 5.0V		12		uA
		RTC operating in PD mode, VDD = 3.0V		4		
I_{PD1}	Power down mode current			2.5		uA
BOD0/BOD1 Characteristics						
V_{BOD0}	BOD0 detection level	T_A = -40°C to +85°C		1.7		V
V_{BOD10}	BOD1 detection level for 2.0V	T_A = -40°C to +85°C		2.0		V
V_{BOD10}	BOD1 detection level for 2.4V	T_A = -40°C to +85°C		2.4		V
V_{BOD11}	BOD1 detection level for 3.7V	T_A = -40°C to +85°C		3.7		V
V_{BOD11}	BOD1 detection level for 4.2V	T_A = -40°C to +85°C		4.2		V
I_{BOD1}	BOD1 Power Consumption	T_A = +25°C, VDD=5.0V		6		uA
		T_A = +25°C, VDD=3.3V		4.5		uA
Operating Condition						
V_{PSR}	Power-on Slop Rate	T_A = -40°C to +85°C	0.05			V/ms
V_{POR1}	Power-on Reset Valid Voltage	T_A = -40°C to +85°C			0.1	V
V_{OP1}	XTAL Operating Speed 0–24MHz	T_A = -40°C to +85°C	2.7		5.5	V
V_{OP2}	XTAL Operating Speed 0-12MHz	T_A = -40°C to +85°C	2.0		5.5	V
V_{OP3}	CPU Operating Speed 0-24MHz	T_A = -40°C to +85°C	2.4		5.5	V
V_{OP4}	CPU Operating Speed 0-12MHz	T_A = -40°C to +85°C	2.0		5.5	V

(1) Data based on characterization results, not tested in production.

34.3. External Clock Characteristics

VDD = 2.0V ~ 5.5V, VSS = 0V, T_A = -40°C to +85°C, unless otherwise specified

Symbol	Parameter	Oscillator				Unit
		Crystal Mode		ECKI Mode		
		Min.	Max	Min.	Max	
$1/t_{CLCL}$	Oscillator Frequency (VDD = 2.7V ~ 5.5V)	0.032	25	0	25	MHz
$1/t_{CLCL}$	Oscillator Frequency (VDD = 2.0V ~ 5.5V)	0.032	12	0	12	MHz
t_{CLCL}	Clock Period	41.6		41.6		ns
t_{CHCX}	High Time	0.4T	0.6T	0.4T	0.6T	t_{CLCL}
t_{CLCX}	Low Time	0.4T	0.6T	0.4T	0.6T	t_{CLCL}
t_{CLCH}	Rise Time		5		5	ns
t_{CHCL}	Fall Time		5		5	ns

Figure 34–1. External Clock Drive Waveform

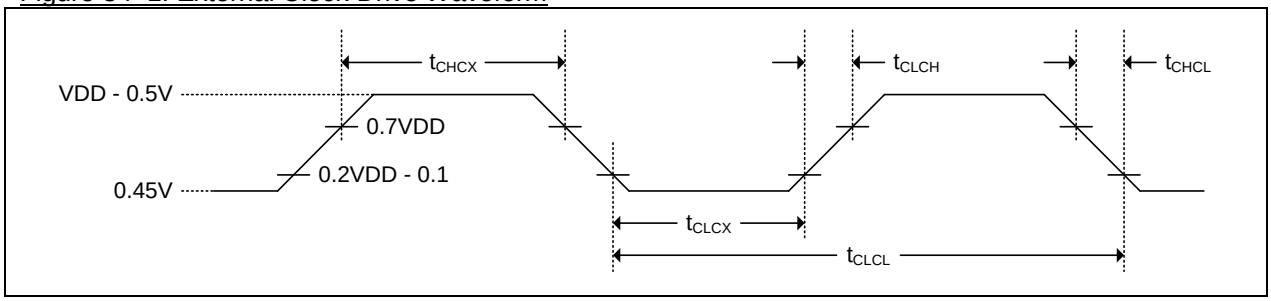

34.4. IHRCO Characteristics

Parameter	Test Condition	Limits			Unit
		min	typ	max	
Supply Voltage		1.8		5.5	V
IHRCO Frequency	T_A = +25°C, AFS = 0		12		MHz
	T_A = +25°C, AFS = 1		11.059		MHz
IHRCO Frequency Deviation (factory calibrated)	T_A = +25°C	-1.0		+1.0	%
	T_A = -40°C to +85°C	-2.5(1)		+2.5(1)	%
IHRCO Start-up Time	T_A = -40°C to +85°C			32(1)	us
IHRCO Power Consumption	T_A = +25°C, VDD=5.0V		350(1)		uA

(1) Data based on characterization results, not tested in production.

34.5. ILRCO Characteristics

Parameter	Test Condition	Limits			Unit
		min	typ	max	
Supply Voltage		1.8		5.5	V
ILRCO Frequency	T_A = +25°C		32		KHz
ILRCO Frequency Deviation	T_A = +25°C	-15(1)		+15(1)	%
	T_A = -40°C to +85°C	-40(1)		+40(1)	%

(1) Data based on characterization results, not tested in production.

34.6. CKM Characteristics

Parameter	Test Condition	Limits			Unit
		min	typ	max	
Supply Voltage	T_A = -40°C to +85°C	2.4		5.5	V
Clock Input Range	T_A = -40°C to +85°C	4.5[1]		6.5[1]	MHz
CKM Start-up Time	T_A = -40°C to +85°C	30[2]		100[2]	us
CKM Power Consumption	T_A = +25°C, VDD=5.0V		480		uA

[1] Data guaranteed by design, not tested in production.
[2] Data based on characterization results, not tested in production.

34.7. Flash Characteristics

Parameter	Test Condition	Limits			Unit
		min	typ	max	
Supply Voltage	T_A = -40°C to +85°C	1.7		5.5	V
Flash Write (Erase/Program) Voltage	T_A = -40°C to +85°C	1.8		5.5	V
Flash Erase/Program Cycle	T_A = -40°C to +85°C	20,000			times
Flash Data Retention	T_A = +25°C	100			year

34.8. ADC Characteristics

VDD=5.0V, VREF+=3.0, T_A= -40℃ ~ +85°C unless otherwise specified

Parameter	Test Condition	Limits			Unit
		min	typ	max	
Supply Range					
Supply Voltage		2.4		5.5	V
DC Accuracy					
Resolution					bits
Integral Nonlinearity	VDD= VREF+= 5.0V				LSB
	VDD= VREF+= 2.4V~5.5V				LSB
	VDD > VREF+ & VREF+= 3.0V ~VDD				LSB
Differential Nonlinearity	VDD= VREF+= 2.4V~5.5V				LSB
	VDD > VREF+ & VREF+= 3.0V ~VDD				LSB
Offset Error	VDD= VREF+= 2.4V~5.5V				LSB
	VDD > VREF+ & VREF+= 3.0V ~VDD				
Conversion Rate					
SAR Conversion Clock					MHz
Conversion Time in SAR Clocks					clocks
Throughput Rate					ksps
Analog Inputs					
ADC Input Voltage Range	Single Ended (AIN+ – GND)				V
	Differential (AIN+ – AIN–)				V
Input Capacitance					pF
Power Consumption					
Power Supply Current	Operating Mode, 250 ksps				mA

34.9. Serial Port Timing Characteristics

VDD = 5.0V±10%, VSS = 0V, T_A = -40°C to +85°C, unless otherwise specified

Symbol	Parameter	URM0X3 = 0		URM0X3 = 1		Unit
		Min.	Max	Min.	Max	
t_{XLXL}	Serial Port Clock Cycle Time	12T		4T		T_{SYSCLK}
t_{QVXH}	Output Data Setup to Clock Rising Edge	10T-20		T-20		ns
t_{XHQX}	Output Data Hold after Clock Rising Edge	T-10		T-10		ns
t_{XHDX}	Input Data Hold after Clock Rising Edge	0		0		ns
t_{XHDV}	Clock Rising Edge to Input Data Valid		10T-20		2T-20	ns

Figure 34–2. Shift Register Mode Timing Waveform

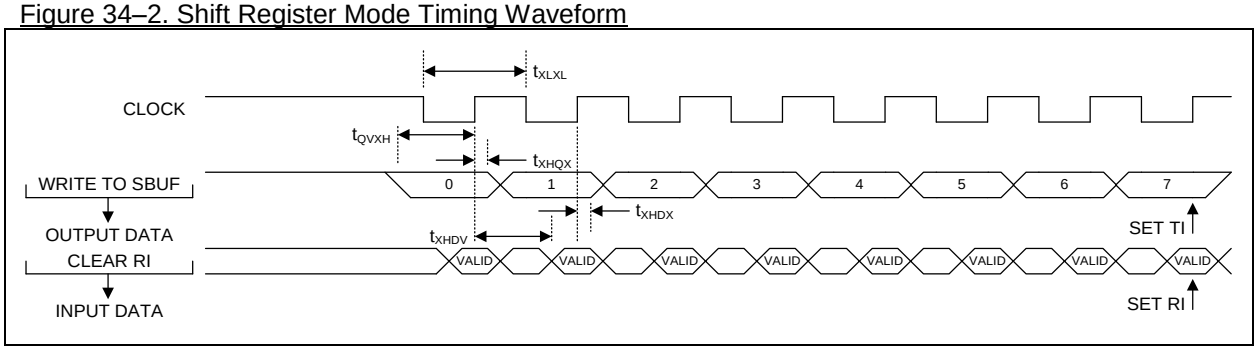

34.10. SPI Timing Characteristics

VDD = 5.0V±10%, VSS = 0V, T_A = -40°C to +85°C, unless otherwise specified

Symbol	Parameter	Min	Max	Units
Master Mode Timing				
t_{MCKH}	SPICLK High Time	2T		T_{SYSCLK}
t_{MCKL}	SPICLK Low Time	2T		T_{SYSCLK}
t_{MIS}	MISO Valid to SPICLK Shift Edge	2T+20		ns
t_{MIH}	SPICLK Shift Edge to MISO Change	0		ns
t_{MOH}	SPICLK Shift Edge to MOSI Change		10	ns
Slave Mode Timing				
t_{SE}	nSS Falling to First SPICLK Edge	2T		T_{SYSCLK}
t_{SD}	Last SPICLK Edge to nSS Rising	2T		T_{SYSCLK}
t_{SEZ}	nSS Falling to MISO Valid		4T	T_{SYSCLK}
t_{SDZ}	nSS Rising to MISO High-Z		4T	T_{SYSCLK}
t_{CKH}	SPICLK High Time	4T		T_{SYSCLK}
t_{CKL}	SPICLK Low Time	4T		T_{SYSCLK}
t_{SIS}	MOSI Valid to SPICLK Sample Edge	2T		T_{SYSCLK}
t_{SIH}	SPICLK Sample Edge to MOSI Change	2T		T_{SYSCLK}
t_{SOH}	SPICLK Shift Edge to MISO Change		4T	T_{SYSCLK}
t_{SLH}	Last SPICLK Edge to MISO Change (CPHA = 1 ONLY)	1T	2T	T_{SYSCLK}

Figure 34–3. SPI Master Transfer Waveform with CPHA=0

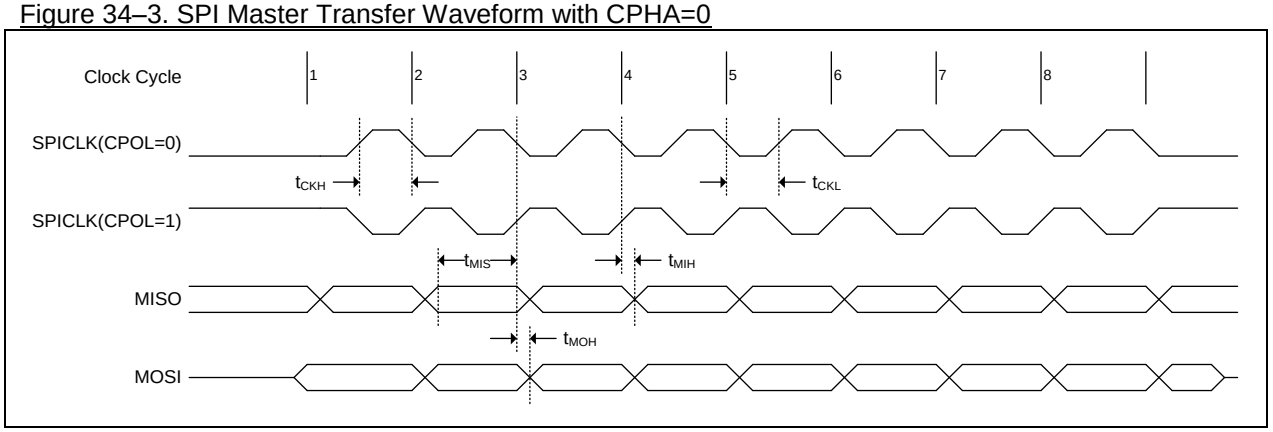

Figure 34–4. SPI Master Transfer Waveform with CPHA=1

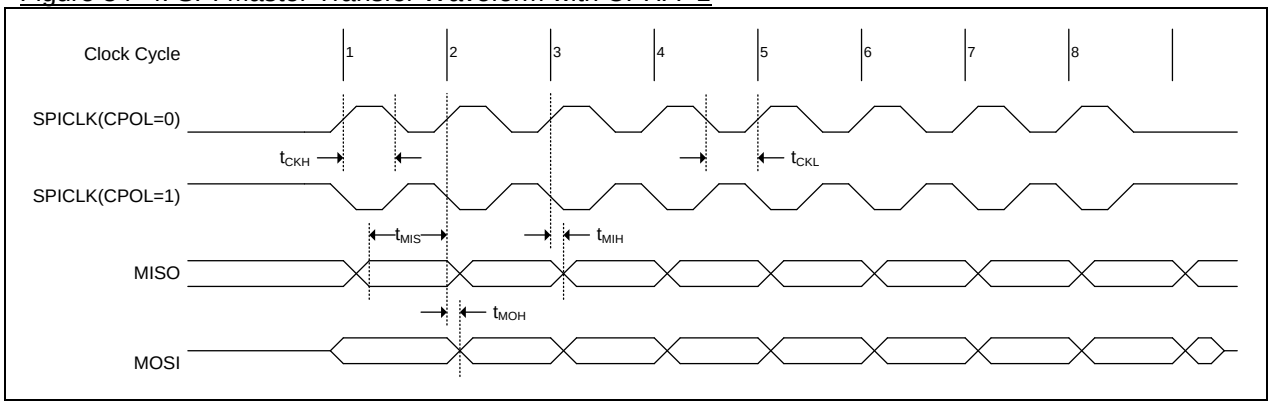

Figure 34–5. SPI Slave Transfer Waveform with CPHA=0

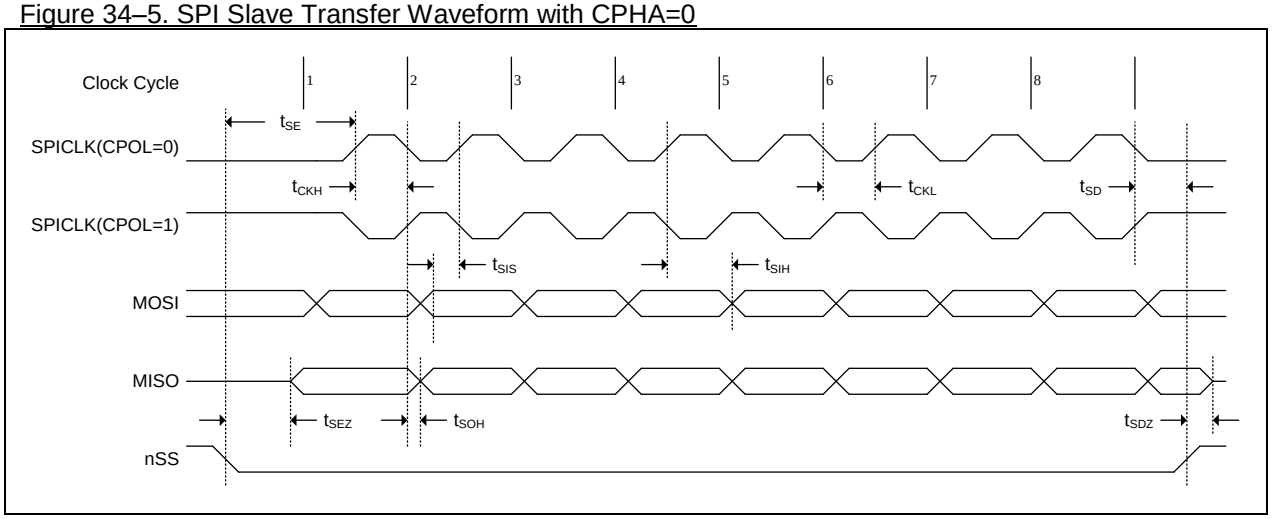

Figure 34–6. SPI Slave Transfer Waveform with CPHA=1

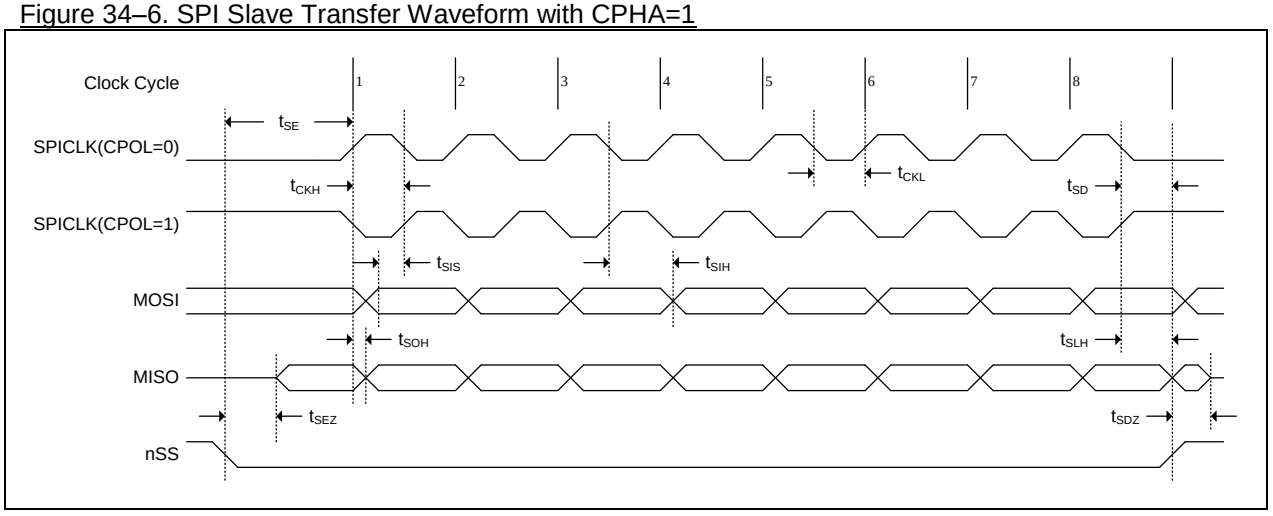

34.11. External Memory Cycle Timing Characteristics

Under operating conditions, load capacitance for Port 0, ALE, and PSEN = 100 pF; load capacitance for all other outputs = 80pF. T_A = -40°C to +85°C, VDD=5.0V±10%, VSS=0V

T: Clock Cycle
M: Clock number of ALE Stretch, M = 0T~3T
N: Clock number of Read/Write Pulse Width Stretch, N = 0T ~ 7T
L: Clock number of Read/Write pulse Setup/Hold Stretch, L = 0T ~ 1T

Symbol	Parameter	Oscillator				Unit
		36MHz Without Stretched MOVX		36MHz with Stretched MOVX		
		Min.	Max	Min.	Max	
$1/t_{CLCL}$	Oscillator Frequency		32		32	MHz
t_{LHLL}	ALE Pulse Width	T-10		T+M-10		ns
t_{AVLL}	Address Valid to ALE Low	T-12		T+M-12		ns
t_{LLAX}	Address Hold after ALE Low	T-12		T+M-12		ns
t_{RLRH}	nRD Pulse Width	T-10		T+N-10		ns
t_{WLWH}	nWR Pulse Width	T-10		T+N-10		ns
t_{RLDV}	nRD Low to valid Data In		T-20		T+N-20	ns
t_{RHDX}	Data Hold After nRD	0		0		ns
t_{RHDZ}	Data Float After nRD		10		10	ns
t_{LLDV}	ALE Low to Valid Data In		3T-20		3T+M+L+N -20	ns
t_{AVDV}	Address to Valid Data In		4T-20		4T+2M+L+N -20	ns
t_{LLWL}	ALE Low to nRD or nWR Low	2T-10	2T+10	2T+2M+L -10	2T+2M+L +10	ns
t_{AVWL}	Address to nRD or nWR Low	3T-10		3T+2M+L -10		ns
t_{WHQX}	Data Hold After nWR	T-10		T+L-10		ns
t_{QVWH}	Data Valid to nWR High	2T-10		2T+L+N -10		ns
t_{QVWX}	Data Valid to nWR High to Low Transition	T-10		T+L-10		ns
t_{RLAZ}	nRD Low to Address Float		0		0	ns
t_{WHLH}	nRD or nWR High to ALE High	T-10		T+L-10		ns

Explanation of Symbols Each timing symbol has 5 characters. The first character is always a 't' (stands for time). The other characters, depending on their positions, stand for the name of a signal or the logical status of that signal. The following is a list of all the characters and what they stand for.

A: Address
C: Clock
D: Input data
H: Logic level HIGH
L: Logic level LOW or ALE
X: No longer a valid logic level
Q: Output data
R: RD signal
t: Time
V: Valid
W: WR signal
Z: High Impedance (Float)

For example:
t_{AVLL} = Time from Address Valid to ALE Low
t_{RLRH} = nRD Pulse Width

Figure 34–7. External Data Memory Read Cycle

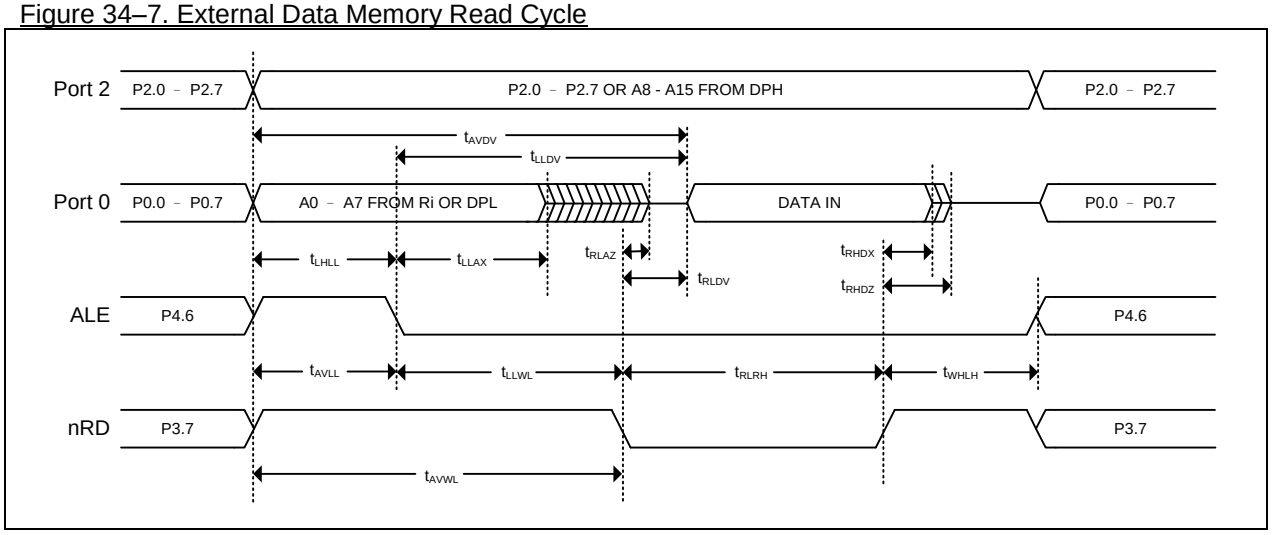

Figure 34–8. External Data Memory Write Cycle

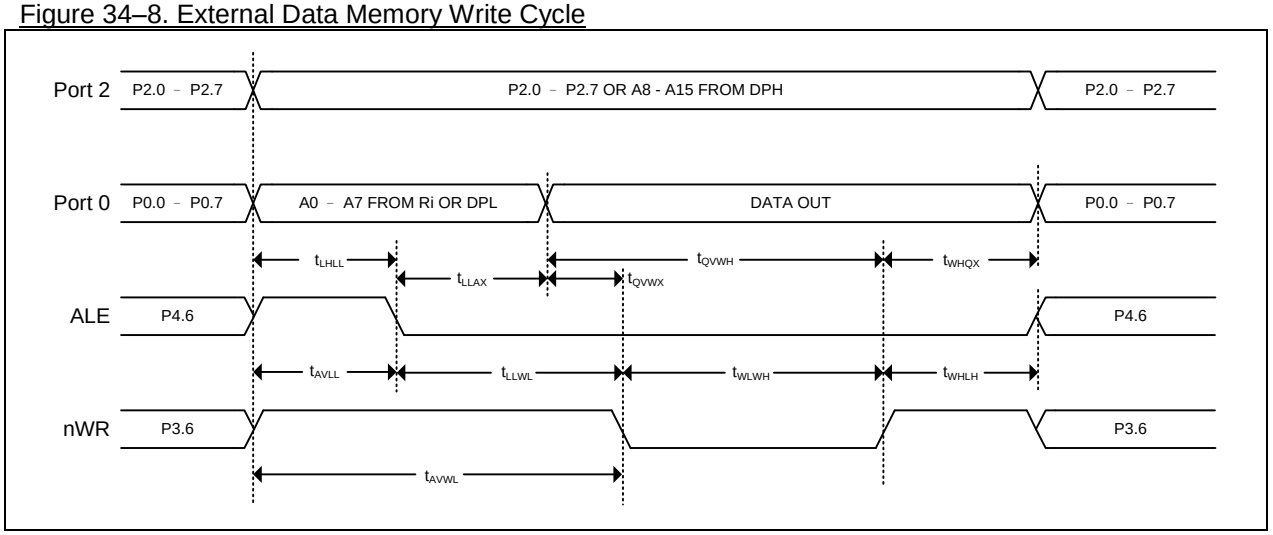

35. Instruction Set

Table 35–1. Instruction Set

MNEMONIC	DESCRIPTION	BYTE	EXECUTION Cycles
DATA TRASFER			
MOV A,Rn	Move register to Acc	1	1
MOV A,direct	Move direct byte o Acc	2	2
MOV A,@Ri	Move indirect RAM to Acc	1	2
MOV A,#data	Move immediate data to Acc	2	2
MOV Rn,A	Move Acc to register	1	2
MOV Rn,direct	Move direct byte to register	2	4
MOV Rn,#data	Move immediate data to register	2	2
MOV direct,A	Move Acc to direct byte	2	3
MOV direct,Rn	Move register to direct byte	2	3
MOV direct,direct	Move direct byte to direct byte	3	4
MOV direct,@Ri	Move indirect RAM to direct byte	2	4
MOV direct,#data	Move immediate data to direct byte	3	3
MOV @Ri,A	Move Acc to indirect RAM	1	3
MOV @Ri,direct	Move direct byte to indirect RAM	2	3
MOV @Ri,#data	Move immediate data to indirect RAM	2	3
MOV DPTR,#data16	Load DPTR with a 16-bit constant	3	3
MOVC A,@A+DPTR	Move code byte relative to DPTR to Acc	1	4
MOVC A,@A+PC	Move code byte relative to PC to Acc	1	4
MOVX A,@Ri	Move on-chip auxiliary RAM(8-bit address) to Acc	1	3
MOVX A,@DPTR	Move on-chip auxiliary RAM(16-bit address) to Acc	1	3
MOVX @Ri,A	Move Acc to on-chip auxiliary RAM(8-bit address)	1	3
MOVX @DPTR,A	Move Acc to on-chip auxiliary RAM(16-bit address)	1	3
MOVX A,@Ri	Move external RAM(8-bit address) to Acc	1	3 ~ 20*Note1
MOVX A,@DPTR	Move external RAM(16-bit address) to Acc	1	3 ~ 20*Note1
MOVX @Ri,A	Move Acc to external RAM(8-bit address)	1	3 ~ 20*Note1
MOVX @DPTR,A	Move Acc to external RAM(16-bit address)	1	3 ~ 20*Note1
PUSH direct	Push direct byte onto Stack	2	4
POP direct	Pop direct byte from Stack	2	3
XCH A,Rn	Exchange register with Acc	1	3
XCH A,direct	Exchange direct byte with Acc	2	4
XCH A,@Ri	Exchange indirect RAM with Acc	1	4
XCHD A,@Ri	Exchange low-order digit indirect RAM with Acc	1	4
ARITHEMATIC OPERATIONS			
ADD A,Rn	Add register to Acc	1	2
ADD A,direct	Add direct byte to Acc	2	3
ADD A,@Ri	Add indirect RAM to Acc	1	3
ADD A,#data	Add immediate data to Acc	2	2
ADDC A,Rn	Add register to Acc with Carry	1	2
ADDC A,direct	Add direct byte to Acc with Carry	2	3
ADDC A,@Ri	Add indirect RAM to Acc with Carry	1	3
ADDC A,#data	Add immediate data to Acc with Carry	2	2
SUBB A,Rn	Subtract register from Acc with borrow	1	2
SUBB A,direct	Subtract direct byte from Acc with borrow	2	3
SUBB A,@Ri	Subtract indirect RAM from Acc with borrow	1	3

SUBB A,#data	Subtract immediate data from Acc with borrow	2	2
INC A	Increment Acc	1	2
INC Rn	Increment register	1	3
INC direct	Increment direct byte	2	4
INC @Ri	Increment indirect RAM	1	4
DEC A	Decrement Acc	1	2
DEC Rn	Decrement register	1	3
DEC direct	Decrement direct byte	2	4
DEC @Ri	Decrement indirect RAM	1	4
INC DPTR	Increment DPTR	1	1
MUL AB	Multiply A and B	1	4
DIV AB	Divide A by B	1	5
DA A	Decimal Adjust Acc	1	4
LOGIC OPERATION			
ANL A,Rn	AND register to Acc	1	2
ANL A,direct	AND direct byte to Acc	2	3
ANL A,@Ri	AND indirect RAM to Acc	1	3
ANL A,#data	AND immediate data to Acc	2	2
ANL direct,A	AND Acc to direct byte	2	4
ANL direct,#data	AND immediate data to direct byte	3	4
ORL A,Rn	OR register to Acc	1	2
ORL A,direct	OR direct byte to Acc	2	3
ORL A,@Ri	OR indirect RAM to Acc	1	3
ORL A,#data	OR immediate data to Acc	2	2
ORL direct,A	OR Acc to direct byte	2	4
ORL direct,#data	OR immediate data to direct byte	3	4
XRL A,Rn	Exclusive-OR register to Acc	1	2
XRL A,direct	Exclusive-OR direct byte to Acc	2	3
XRL A,@Ri	Exclusive-OR indirect RAM to Acc	1	3
XRL A,#data	Exclusive-OR immediate data to Acc	2	2
XRL direct,A	Exclusive-OR Acc to direct byte	2	4
XRL direct,#data	Exclusive-OR immediate data to direct byte	3	4
CLR A	Clear Acc	1	1
CPL A	Complement Acc	1	2
RL A	Rotate Acc Left	1	1
RLC A	Rotate Acc Left through the Carry	1	1
RR A	Rotate Acc Right	1	1
RRC A	Rotate Acc Right through the Carry	1	1
SWAP A	Swap nibbles within the Acc	1	1
BOOLEAN VARIABLE MANIPULATION			
CLR C	Clear Carry	1	1
CLR bit	Clear direct bit	2	4
SETB C	Set Carry	1	1
SETB bit	Set direct bit	2	4
CPL C	Complement Carry	1	1
CPL bit	Complement direct bit	2	4
ANL C,bit	AND direct bit to Carry	2	3
ANL C,/bit	AND complement of direct bit to Carry	2	3
ORL C,bit	OR direct bit to Carry	2	3

ORL C,/bit	OR complement of direct bit to Carry	2	3
MOV C,bit	Move direct bit to Carry	2	3
MOV bit,C	Move Carry to direct bit	2	4
BOOLEAN VARIABLE MANIPULATION			
JC rel	Jump if Carry is set	2	3
JNC rel	Jump if Carry not set	2	3
JB bit,rel	Jump if direct bit is set	3	4
JNB bit,rel	Jump if direct bit not set	3	4
JBC bit,rel	Jump if direct bit is set and then clear bit	3	5
PROAGRAM BRACHING			
ACALL addr11	Absolute subroutine call	2	6
LCALL addr16	Long subroutine call	3	6
RET	Return from subroutine	1	4
RETI	Return from interrupt subroutine	1	4
AJMP addr11	Absolute jump	2	3
LJMP addr16	Long jump	3	4
SJMP rel	Short jump	2	3
JMP @A+DPTR	Jump indirect relative to DPTR	1	3
JZ rel	Jump if Acc is zero	2	3
JNZ rel	Jump if Acc not zero	2	3
CJNE A,direct,rel	Compare direct byte to Acc and jump if not equal	3	5
CJNE A,#data,rel	Compare immediate data to Acc and jump if not equal	3	4
CJNE Rn,#data,rel	Compare immediate data to register and jump if not equal	3	4
CJNE @Ri,#data,rel	Compare immediate data to indirect RAM and jump if not equal	3	5
DJNZ Rn,rel	Decrement register and jump if not equal	2	4
DJNZ direct,rel	Decrement direct byte and jump if not equal	3	5
NOP	No Operation	1	1

Note 1: The cycle time for access of external auxiliary RAM is:

EMAI1 = 0: 5 + 2 x ALE_Stretch + RW_Stretch + 2 x RWSH; (5~20)

EMAI1 = 1: 3 + RW_Stretch + 2 x RWSH; (3~12)

36. Package Dimension

36.1. LQFP-64 (7mm X 7mm)

Figure 36–1 LQFP-64 (7mm X 7mm)

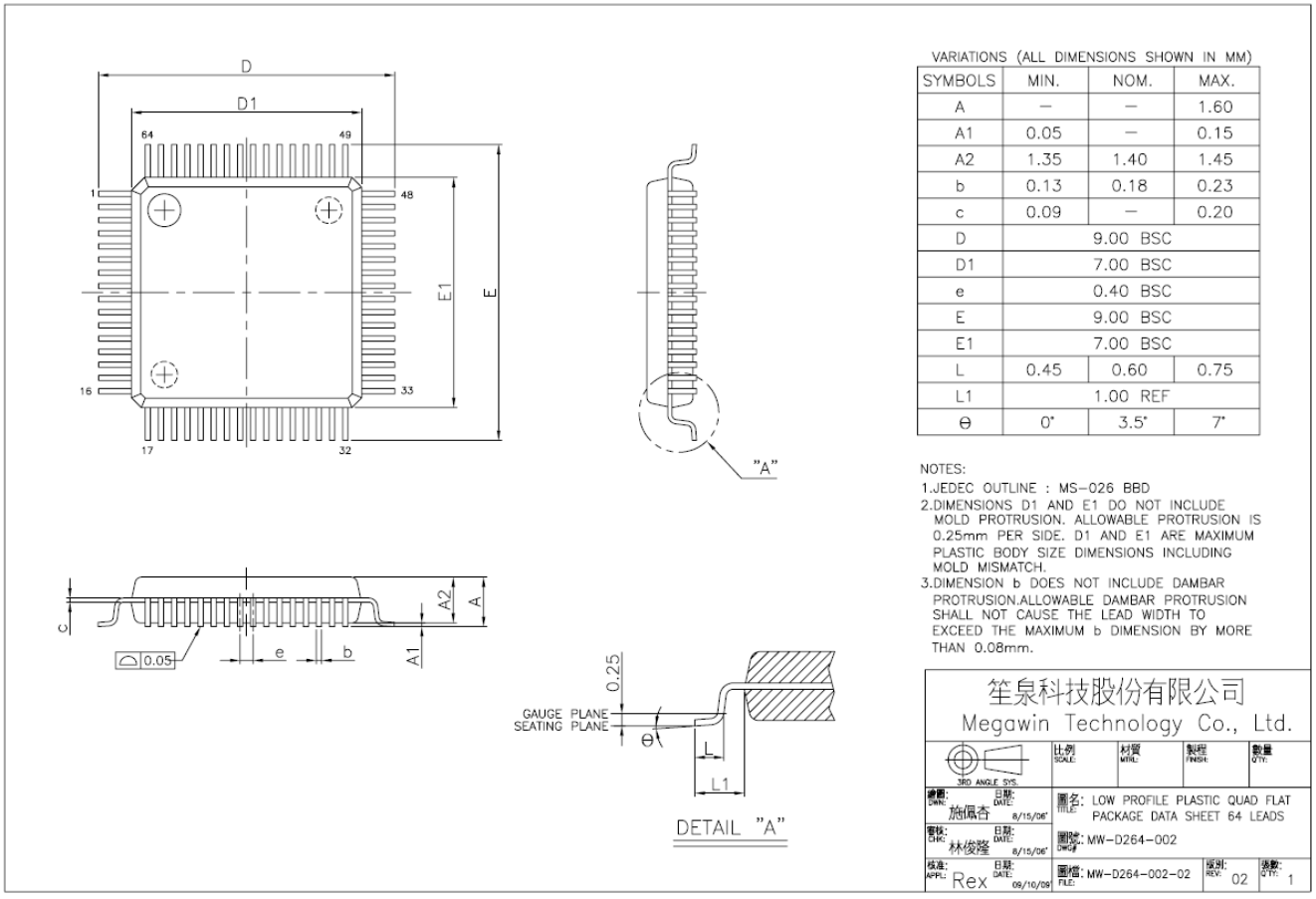

VARIATIONS (ALL DIMENSIONS SHOWN IN MM)

SYMBOLS	MIN.	NOM.	MAX.
A	—	—	1.60
A1	0.05	—	0.15
A2	1.35	1.40	1.45
b	0.13	0.18	0.23
c	0.09	—	0.20
D		9.00 BSC	
D1		7.00 BSC	
e		0.40 BSC	
E		9.00 BSC	
E1		7.00 BSC	
L	0.45	0.60	0.75
L1		1.00 REF	
θ	0°	3.5°	7°

NOTES:
1.JEDEC OUTLINE : MS-026 BBD
2.DIMENSIONS D1 AND E1 DO NOT INCLUDE MOLD PROTRUSION. ALLOWABLE PROTRUSION IS 0.25mm PER SIDE. D1 AND E1 ARE MAXIMUM PLASTIC BODY SIZE DIMENSIONS INCLUDING MOLD MISMATCH.
3.DIMENSION b DOES NOT INCLUDE DAMBAR PROTRUSION.ALLOWABLE DAMBAR PROTRUSION SHALL NOT CAUSE THE LEAD WIDTH TO EXCEED THE MAXIMUM b DIMENSION BY MORE THAN 0.08mm.

笙泉科技股份有限公司
Megawin Technology Co., Ltd.

3RD ANGLE SYS.	比例 SCALE:	材質 MTRL:	製程 FINISH:	數量 QTY:
繪圖: DWN: 施佩杏	日期: DATE: 8/15/06'	圖名: TITLE: LOW PROFILE PLASTIC QUAD FLAT PACKAGE DATA SHEET 64 LEADS		
審核: CHK: 林俊隆	日期: DATE: 8/15/06'	圖號: DWG# MW-D264-002		
核准: APPL: Rex	日期: DATE: 09/10/09	檔名: FILE: MW-D264-002-02	版別: REV: 02	張數: QTY: 1

36.2. LQFP-48 (7mm X 7mm)

Figure 36–1. LQFP-48 (7mm X 7mm)

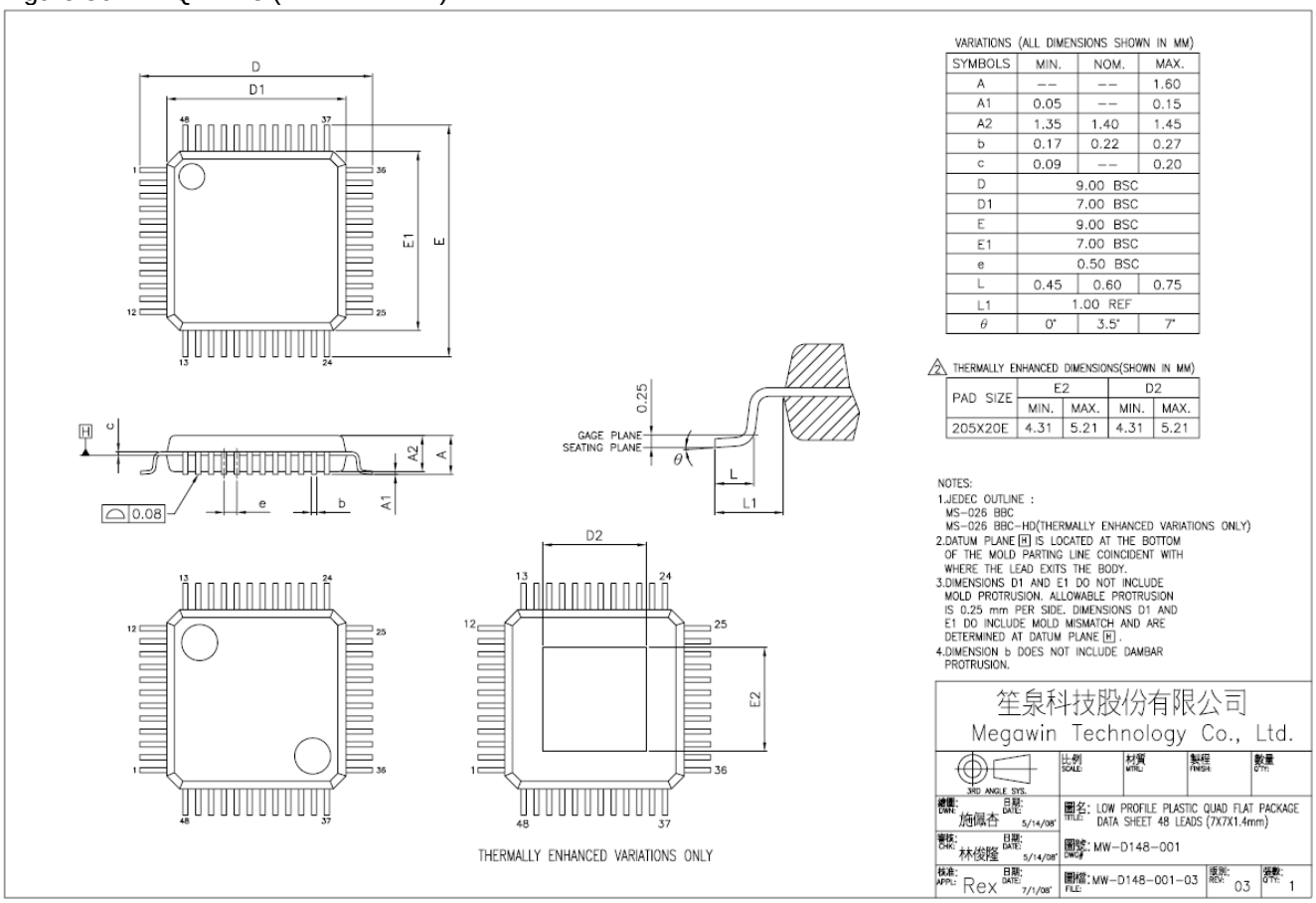

VARIATIONS (ALL DIMENSIONS SHOWN IN MM)

SYMBOLS	MIN.	NOM.	MAX.
A	--	--	1.60
A1	0.05	--	0.15
A2	1.35	1.40	1.45
b	0.17	0.22	0.27
c	0.09	--	0.20
D	9.00 BSC		
D1	7.00 BSC		
E	9.00 BSC		
E1	7.00 BSC		
e	0.50 BSC		
L	0.45	0.60	0.75
L1	1.00 REF		
θ	0°	3.5°	7°

2 THERMALLY ENHANCED DIMENSIONS(SHOWN IN MM)

PAD SIZE	E2		D2	
	MIN.	MAX.	MIN.	MAX.
205X20E	4.31	5.21	4.31	5.21

NOTES:
1.JEDEC OUTLINE :
MS-026 BBC
MS-026 BBC-HD(THERMALLY ENHANCED VARIATIONS ONLY)
2.DATUM PLANE H IS LOCATED AT THE BOTTOM OF THE MOLD PARTING LINE COINCIDENT WITH WHERE THE LEAD EXITS THE BODY.
3.DIMENSIONS D1 AND E1 DO NOT INCLUDE MOLD PROTRUSION. ALLOWABLE PROTRUSION IS 0.25 mm PER SIDE. DIMENSIONS D1 AND E1 DO INCLUDE MOLD MISMATCH AND ARE DETERMINED AT DATUM PLANE H.
4.DIMENSION b DOES NOT INCLUDE DAMBAR PROTRUSION.

笙泉科技股份有限公司
Megawin Technology Co., Ltd.

3RD ANGLE SYS.

比例 SCALE:	材質 MTRL:	製程 FINISH:	數量 QTY:
繪圖: 施佩杏 DWN: 日期: 5/14/08'	圖名: LOW PROFILE PLASTIC QUAD FLAT PACKAGE DATA SHEET 48 LEADS (7X7X1.4mm)		
審核: 林俊隆 CHK: 日期: 5/14/08'	圖號: MW-D148-001 DWG#		
核准: Rex APPL: 日期: 7/1/08'	圖檔: MW-D148-001-03 FILE:	版次: REV: 03	張數: QTY: 1

37. Revision History

Table 37–1. Revision History

Rev	Descriptions	Date
v0.22	Preliminary version release.	2015/01/21
v0.23	Update the content of Electrical Characteristics.	2015/07/10
V0.24	Update the content of Package Dimension and Section 29.2	2015/08/04

38. Disclaimers

Herein, Megawin stands for "***Megawin Technology Co., Ltd.***"

Life Support — This product is not designed for use in medical, life-saving or life-sustaining applications, or systems where malfunction of this product can reasonably be expected to result in personal injury. Customers using or selling this product for use in such applications do so at their own risk and agree to fully indemnify Megawin for any damages resulting from such improper use or sale.

Right to Make Changes — Megawin reserves the right to make changes in the products - including circuits, standard cells, and/or software - described or contained herein in order to improve design and/or performance. When the product is in mass production, relevant changes will be communicated via an Engineering Change Notification (ECN).