humiSteam Basic

humidifiers

CAREL



ENG User manual

LEGGI E CONSERVA QUESTE ISTRUZIONI

READ AND SAVE THESE INSTRUCTIONS

Integrated Control Solutions & Energy Savings

WARNINGS



The CAREL humidifiers are advanced products, whose operation is specified in the technical documentation supplied with the product or can be downloaded, even prior to purchase, from the website www.carel.com. Each CAREL S.p.A. product, in relation to its advanced level of technology, requires setup/configuration/programming/commissioning to be able to operate in the best possible way for the specific application. The failure to complete such operations, which are required/indicated in the user manual, may cause the final product to malfunction; CAREL accepts no liability in such cases.
The customer (manufacturer, developer or installer of the final equipment) accepts all liability and risk relating to the configuration of the product in order to reach the expected results in relation to the specific final installation and/or equipment. CAREL may, based on prior agreements, act as a consultant for the installation/commissioning/use of the unit, however in no case does it accept liability for the correct operation of the humidifier and the final installation if the warnings or suggestions provided in this manual or in other product technical documents are not heeded. In addition to observing the above warnings and suggestions, the following warnings must be heeded for the correct use of the product:

- **DANGER OF ELECTRIC SHOCK**

The humidifier contains live electrical components. Disconnect the mains power supply before accessing inside parts or during maintenance and installation.

- **DANGER OF WATER LEAKS**

The humidifier automatically and constantly fills/drains certain quantities of water. Malfunctions in the connections or in the humidifier may cause leaks.

- **DANGER OF BURNS**

The humidifier contains high temperature components and delivers steam at 100°C/ 212°F.

Important:

- The installation of the product must include an earth connection, using the special yellow-green terminal available in the humidifier.
- The environmental and power supply conditions must conform to the values specified on the product rating labels.
- The product is designed exclusively to humidify rooms either directly or through distribution systems (ducts).
- Only qualified personnel who are aware of the necessary precautions and able to perform the required operations correctly may install, operate or carry out technical service on the product.
- Only water with the characteristics indicated in this manual must be used for steam production.
- All operations on the product must be carried out according to the instructions provided in this manual and on the labels applied to the product. Any uses or modifications that are not authorised by the manufacturer are considered improper. CAREL S.p.A. declines all liability for any such unauthorised use.
- Do not attempt to open the humidifier in ways other than those specified in the manual.
- Observe the standards in force in the place where the humidifier is installed.
- Keep the humidifier out of the reach of children and animals.
- Do not install and use the product near objects that may be damaged when in contact with water (or condensate). CAREL S.p.A. declines all liability for direct or indirect damage following water leaks from the humidifier.
- Do not use corrosive chemicals, solvents or aggressive detergents to clean the inside and outside parts of the humidifier, unless specifically indicated in the user manual.
- Do not drop, hit or shake the humidifier, as the inside parts and the linings may be irreparably damaged.

CAREL S.p.A. adopts a policy of continual development. Consequently, CAREL reserves the right to make changes and improvements to any product described in this document without prior warning. The technical specifications shown in the manual may be changed without prior warning.

The liability of CAREL in relation to its products is specified in the CAREL S.p.A. general contract conditions, available on the website www.carel.com and/or by specific agreements with customers; specifically, to the extent where allowed by applicable legislation, in no case will CAREL S.p.A., its employees or subsidiaries be liable for any lost earnings or sales, losses of data and information, costs of replacement goods or services, damage to things or people, downtime or any direct, indirect, incidental, actual, punitive, exemplary, special or consequential damage of any kind whatsoever, whether contractual, extra-contractual or due to negligence, or any other liabilities deriving from the installation, use or impossibility to use the product, even if CAREL S.p.A. or its subsidiaries are warned of the possibility of such damage.

DISPOSAL



The humidifier is made up of metal parts and plastic parts. In reference to European Union directive 2002/96/EC issued on 27 January 2003 and the related national legislation, please note that:

1. WEEE cannot be disposed of as municipal waste and such waste must be collected and disposed of separately;
2. the public or private waste collection systems defined by local legislation must be used. In addition, the equipment can be returned to the distributor at the end of its working life when buying new equipment;
3. the equipment may contain hazardous substances: the improper use or incorrect disposal of such may have negative effects on human health and on the environment;
4. the symbol (crossed-out wheeled bin) shown on the product or on the packaging and on the instruction sheet indicates that the equipment has been introduced onto the market after 13 August 2005 and that it must be disposed of separately;
5. in the event of illegal disposal of electrical and electronic waste, the penalties are specified by local waste disposal legislation.

Warranty on the materials: 2 years (from the date of production, excluding consumables).

Approval: the quality and safety of CAREL S.P.A. products are guaranteed by the ISO 9001 certified design and production system, as well as by the mark.

Contents

1. INTRODUCTION AND ASSEMBLY 7

1.1 humiSteam basic (UEY*) 7
1.2 Dimensions and weights 7
1.3 Opening the packaging 7
1.4 Positioning 7
1.5 Wall-mounting 7
1.6 Removing the front cover 8
1.7 Fitting the front cover 9
1.8 Components and accessories 9

2. WATER CONNECTIONS 10

2.1 Supply water 12
2.2 Drain water 12
2.3 Drain tempering 12

3. STEAM DISTRIBUTION 13

3.1 CAREL jet distributors (SDPOEM00**) 13
3.2 CAREL linear distributors for air ducts (DP***DRU) 13
3.3 CAREL steam blowers (VSDU0A*, models UE001 to UE018 only) 13
3.4 Steam hoses 14
3.5 Condensate drain hose 14

4. ELECTRICAL CONNECTIONS 15

4.1 Preparing the electric cableways 15
4.2 Power cable connection 15
4.3 Steam production control signals (M2.1 - M2.7) 15
4.4 Alarm contact (M5.1 - M5.2) 16
4.5 Auxiliary contact: production request present, external fan control) (M14.1 - M14.3) 16

5. REMOTE TERMINAL AND SUPERVISORY NETWORK 17

5.1 Remote display terminal 17
5.2 RS485 supervisory network (M1.1-M1.3) 17

6. STARTING AND USER INTERFACE 18

6.1 Starting 18
6.2 Stopping 18
6.3 Display 18
6.4 Keypad 18
6.5 Main display 18
6.6 Disabling 18
6.7 Recalling the manufacturer defaults 19
6.8 Visualization release Software 19
6.9 Match digit (match between the softwares of board and terminal) 19
6.10 Reset cylinder hour counters 19
6.11 Parameters: Saving/recalling the user settings 19
6.12 Manually drain the water in the cylinder 19

7. CONFIGURATION PARAMETERS 20

7.1 Accessing and setting the parameters 20
7.2 Basic parameters 20
7.3 Advanced parameters 20
7.4 Serial connection parameters 20
7.5 Read-only parameters 20

8. ALARMS 21

9. MAINTENANCE AND SPARE PART 23

9.1 Spare parts for models UE001 to UE018 23
9.2 Spare parts for models UE025 to UE065 25
9.3 Cleaning and maintenance of the cylinder 27
9.4 Mechanically draining the water in the cylinder 27
9.5 Cylinder connection, three-phase models UE025 to UE065 28
9.6 Cleaning and maintenance of the other components 28

10. WIRING DIAGRAMS 29

10.1 Diagram of single-phase models UE001 to UE009 (208-230V) 29
10.2 Diagram of three-phase models UE003 to UE018 (208-230-460-575V) 30
10.3 Diagram of three-phase models UE025 (208-230-460-575V) and UE045 (460-575 V) 31
10.4 Diagram of three-phase models UE045 (208-230 V) and UE065(460-575V) 32

11. GENERAL FEATURES AND MODELS 33

11.2 Technical specifications 35
11.3 Models of steam hoses 36
11.5 Models of linear distributors and typical installations 37
11.6 Table of parameter b1 39
11.6 Table of parameter b1 41
11.7 CONTROLLING THE BOARD VIA NETWORK 43
11.8 Controlling production using variables I62 and I63 44
11.9 Read alarm log via the network 44
11.10 Loss of network communication 44
11.11 Modbus® protocol on the UEY boards 44
11.12 Exceptions managed 44

12. ADVANCED FUNCTIONS 45

12.1 Operating principle 45
12.2 Control principles 45
12.3 Supply water conductivity 45
12.4 Automatic draining 45
12.5 Automatic insufficient supply water management 46
12.6 Alarm relay switching 46
12.7 Auxiliary contact management (active fan request) 46
12.8 Manual procedure 46
12.9 LEDs on the control board 46

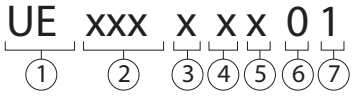

1	ID prefix;		
2	rated instant steam production in kg/h / lbr/h:	**mod.**	**production**
		001	1.5/3.3
		003	3/6.6
		005	5/11
		008	8/17.6
		009	9/19.8
		010	10/22
		015	15/33
		018	18/39.7
		025	25/55.1
		035	35/77.2
		045	45/99.2
		065	65/143.3
3	type of control:	Y= UEY basic	
4	type - power supply:	**type**	**V**
		U= 208	1~N
		D= 230	1~N
		W= 208	3~
		K= 230	3~
		M= 460	3~
		N= 575	3~
5	option:	0= standard cylinder 1= cylinder for low conductivity	
6		U= UL certified version for the American market	
7		level revision	

Table 1.a

1. INTRODUCTION AND ASSEMBLY

1.1 humiSteam basic (UEY*)

Range of isothermal immersed electrode humidifiers with backlit display for the control and distribution of steam.

Models available (identifiable from the code shown on the product):
- UE001, UE003, UE005, UE008, UE009, UE010, UE015, UE018 with steam production capacity up to 18 kg/h (39.7 lb/h), water connections under the base of the humidifier;
- UE025, UE035, UE045, UE065 with steam production capacity from 25 to 65 kg/h (55.1 to 144.3 lb/h), water connections on the side of the humidifier.

1.2 Dimensions and weights

Models UE001 to UE018 | Models UE025 to UE065

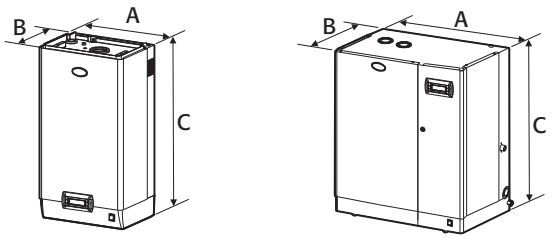

Fig. 1.a

		UE001 to UE008	UE009 to UE018	UE025 to UE045	UE045** to UE065
dimensions mm (")	A	365 (14.4)		545 (21.5)	635 (25.0)
	B	275 (10.8)		375 (14.8)	465 (18.3)
	C	712 (28.0)		815 (32.0)	890 (35.0)
weights kg (lb)	packaged	16 (35.3)	20 (44.0)	39 (86.0)	51 (112.4)
	empty	13,5 (29.8)	17 (37.5)	34 (74.9)	44 (97.0)
	installed*	19 (41.9)	27 (59.5)	60,5 (133.4)	94 (207.2)

Tab. 1.a

*: in operating conditions, filled with water
**: 230 Vac model

1.3 Opening the packaging

- ☒ make sure the humidifier is intact upon delivery and immediately notify the transporter, in writing, of any damage that may be due to careless or improper transport;
- ☒ move the humidifier to the site of installation before removing from the packaging, grasping the neck only from underneath the base;
- ☒ open the cardboard box, remove the protective material and remove the humidifier, keeping it vertical at all times.

1.4 Positioning

- the unit is designed to be mounted on a wall that is strong enough to support the weight in normal operating conditions (see Wall-mounting below). Models UE025 to UE065 can stand on the floor;
- to ensure correct steam distribution, position the humidifier near the point of steam distribution;
- make sure the humidifier is level, allowing the minimum clearances (see Fig. 1.b) for maintenance operations.

Important: during operation the metal casing heats up and the rear part resting against the wall may reach temperatures in excess of 60 °C (140 °F) .

Distances from walls

Models UE001 to UE018 | Models UE025 to UE065

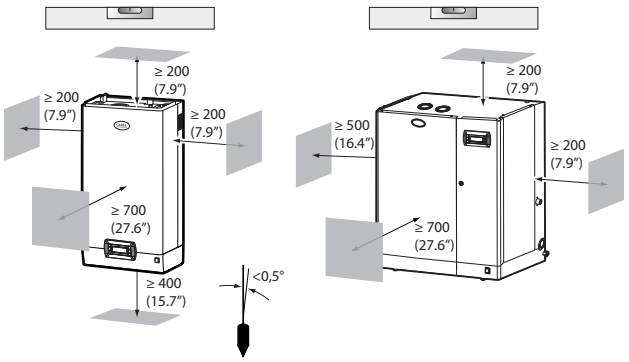

Fig. 1.b

1.5 Wall-mounting

Fit the humidifier on the wall using the support bracket and the screw kit supplied (for the dimensions in mm/inches see Fig. 1.d).
Assembly instructions:
1. unscrew the wall bracket from the humidifier bracket;
2. fasten the wall bracket (see Fig. 1.c), checking horizontal position with a spirit level; if installed on a masonry wall, the plastic anchor plugs (dia. 8 mm/0.31") and screws (dia. 5 mm x L= 50 mm/ 0.19" x L= 1.97") supplied can be used;
3. hang the appliance to the bracket using the slot on the top edge of the rear of the appliance;
4. secure the appliance to the wall through the hole in the centre on the rear of the unit. For the weights and dimensions see Tab.1.a.

Models UE001 to UE065

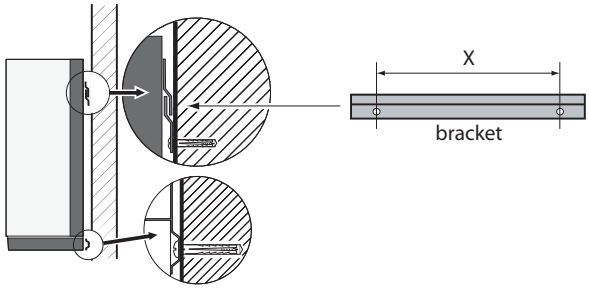

Fig. 1.c

Spacing of the holes on the wall

Models UE001 to UE018

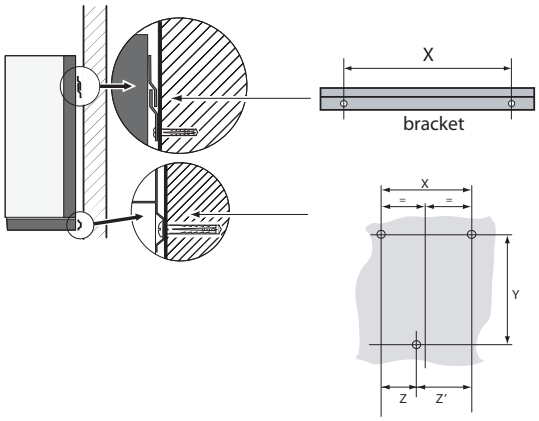

Models UE025 to UE065

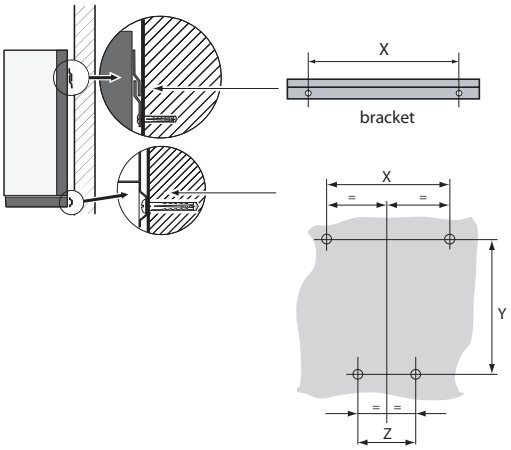

Fig. 1.d

Models UE025 to UE065

distance mm (")	Models			
	UE001 to UE018	UE009 to UE018	UE025 to UE045	UE045* to UE065
X	270 (10.7)	270 (10.7)	445 (17.5)	535 (21.0)
Y	580 (22.8)		655 (25.8)	730 (28.7)
Z	107 (4.2)	107 (4.2)	250 (9.8)	340 (13.4)
Z'	163 (6.4)	163 (6.4)	--	--

* 230 Vac models only

1.6 Removing the front cover

Models UE001 to UE018:

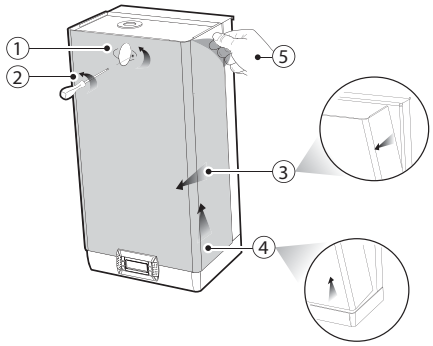

Fig. 1.e

1. turn oval-shaped label with the Carel logo, revealing the head of the earth screw below;
2. remove the screw using a screwdriver;
3. hold the cover by the sides and tilt;
4. remove the cover by moving to the bottom;
5. remove the protective film

Models UE025 to UE065:

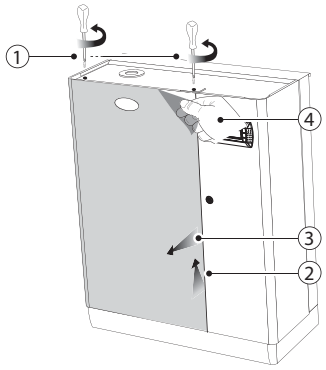

Fig. 1.f

1. remove the screws from the top of the humidifier using a screwdriver;
2. hold the cover/covers from the top and lift it around 20 mm (0.79");
3. remove the cover/covers by moving it/them forwards;
4. remove the protective film (on all the outside surfaces of the humidifier).

1.7 Fitting the front cover

Models UE001 to UE018:

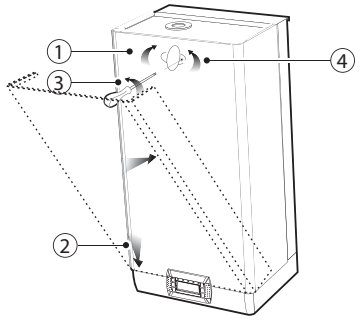

Fig. 1.g

1. turn the red oval-shaped plate with the CAREL logo, revealing the fastening hole below;
2. slip the cover onto the frame (keeping it slightly oblique), until it rests on the rear edges, paying attention to the positioning holes on the side;
3. tighten the earth screw using a screwdriver;
4. turn the red oval-shaped plate with the CAREL logo until covering the fastening hole below7.

Models UE025 to UE065:

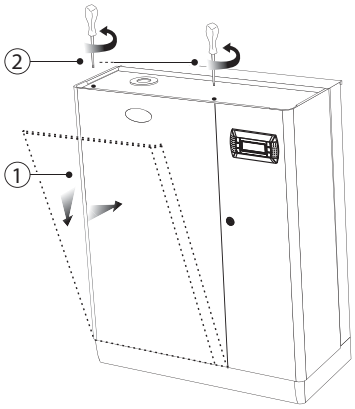

Fig. 1.h

1. slip the cover/covers onto the frame (keeping it/them slightly raised and tilted), until it rests on the rear edges;
2. tighten the screws on the top of the humidifier using a screwdriver.

Important: in models UE025 to UE065 open the electrical compartment on the humidifier using the lock with slot.

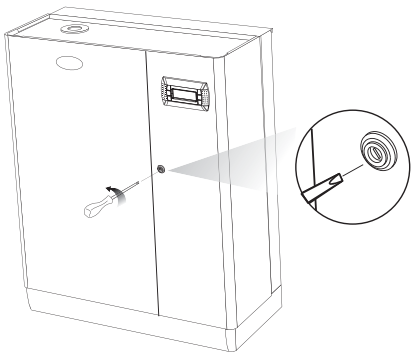

Fig. 1.i

1.8 Components and accessories

Once having opened the packaging and removed the front cover of the humidifier, make sure the following are included::



☒ kit of screws with plugs for wall-mounting



☒ kit code **98C615P003** of connectors for the electronic board.



☐ models UE001 to UE018 use fill hose connection FWH3415000, and models UE025 to UE65 use code FWHDCV0000 non-return valve with connection pipe for fill water and use code FWH3415000 for inlet drain temperening.



☒ models UE025 to UE065 only: angular plastic hose (drain water connection).

2. WATER CONNECTIONS

Important: before proceeding, disconnect the humidifier from the power supply.

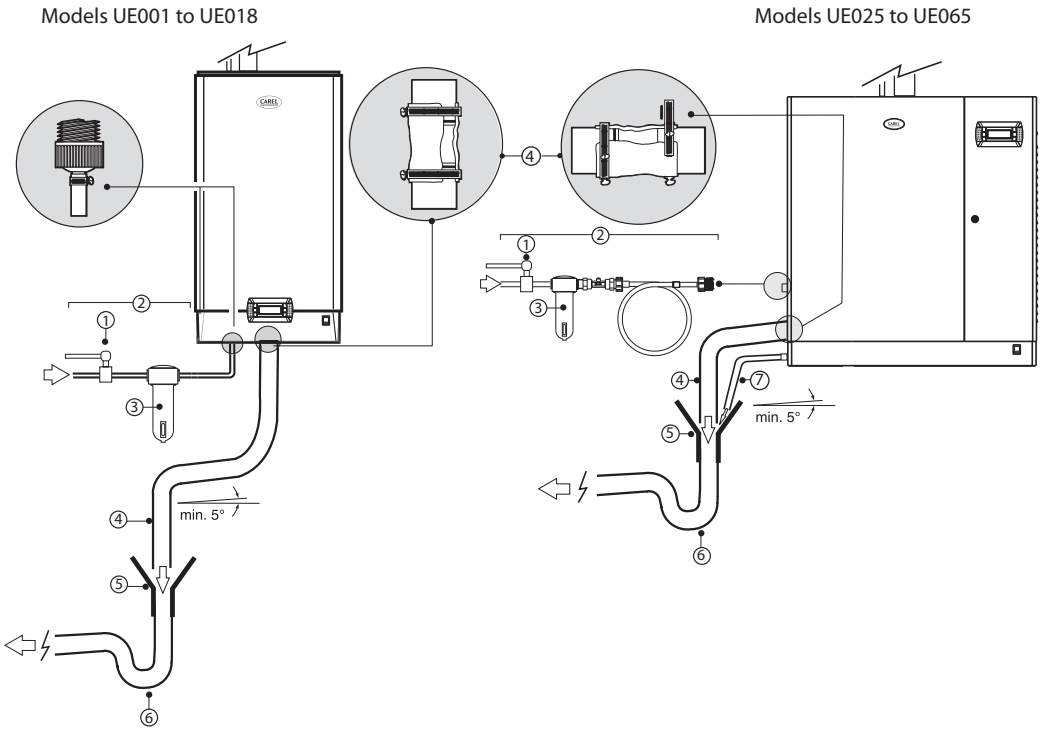

Fig. 2.a

Water connections:

- 1. install a manual valve upstream of the installation (to be able to shut off the water supply);
- 2. connect the humidifier to the water supply. On models UE001 to UE0018, use a hose with 3/4"G fittings (see par. 11.2 "Technical specifications", compatible CAREL hose: code FWH3415000). On models UE025 to UE065 connect the hose with the non-return valve supplied (code FWHDCV0000) to prevent the water inside the humidifier from coming into contact with the mains water;
- 3. install a mechanical filter to trap any solid impurities (to be connected downstream of the manual valve);
- 4 connect a section of non-conductive pipe or hose for draining (resistant to temperatures of 100 °C (212 °F) and with a minimum inside diameter of 40 mm/1.6" up to UE018, and 50 mm/ 1.9" for models UE025 to UE065);
- 5 prepare a funnel to interrupt continuity in the drain line funnel for required air gap, can be composed of a piping reducer;
- 6 connect a drain trap to prevent the return of bad odours (minimum inside diameter of 40 mm/1.6" up to UE018, and 50 mm/ 1.9" for models UE025 to UE065);
- 7 in models UE025 to UE0065: connect a drain hose (minimum inside diameter 15 mm (0.59")) from the bottom tank of the humidifier (this can run into the drain funnel).
- 8 in models UE025 to UE065: connect the hose code FWH3415000 for the drain tempering valve.

Important: when installation is completed, flush the supply hose for around 30 minutes by piping water directly into the drain, without sending it into the humidifier. This will eliminate any scale or processing residues that may block the drain pump and cause foam when boiling.

Fittings provided for the water connections:

Models UE001 to UE018

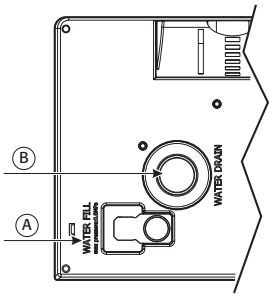

Models UE025 to UE065

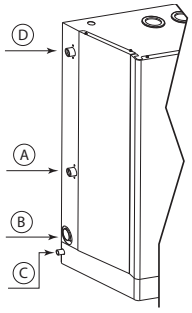

Key:

A. supply water inlet
B. drain water outlet
C. bottom tank drain water outlet (models UE025 to UE065 only)
D. supply water inlet drain tempering valve

Fig. 2.b

Hydraulic interfaces dimensions

Interfaces dimensions drain/fill

dimensions mm (in)	UE001 to UE018
D	72.6 (28.6)
D'	125.4 (49.4)
E	52.6 (20.7)
E'	107.5 (42.3)

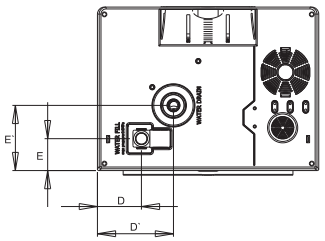

Interfaces dimensions
steam outlet and condensed drain

dimensions mm (in)	UE001 to UE018
F	126.7 (50.0)
F'	224 (88.2)
G	137.9 (54.3)
G'	21.7 (8.6)

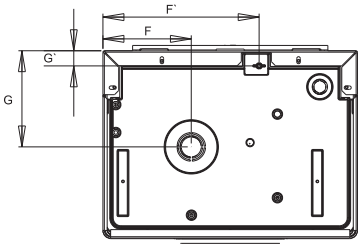

Interfaces dimensions drain/fill

dimensions mm (in)	UE025 to UE045	UE045* to UE065
I	40 (15.8)	
I'	72 (28.3)	
I''	10.2 (4.0)	
L	123.2 (48.5)	
L'	231.2 (91.0)	
L''	49.1 (19.3)	
L'''	678 (26.7)	752(29.6)

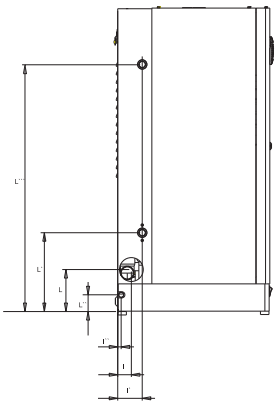

Interfaces dimensions
steam outlet and condensed drain

dimen. mm (in)	UE025 to UE045	UE045* to UE065
M	172 (67.7)	223.7 (88.1)
M'	30.2 (11.9)	30.2 (11.9)
N	181 (71.3)	181 (71.3)
N'	---	100 (39.4)
N''	55 (21.7)	61 (24.0)

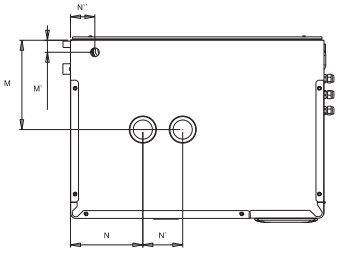

* 230 Vac models only

2.1 Supply water

Only use mains water with:
- pressure between 0.1 and 0.8 MPa (14.5 and 116 PSI), temperature between 1 and 40 °C (33.8 and104 °F) and an instant flow-rate no lower than the rated flow of the fill solenoid valve, the connection is G3/4M (see par. "11.2 Technical specifications");
- range hardness 10° to 40 °f (equal to 400 ppm of $CaCO_3$), conductivity: 75 to 1250 µS/cm;
- no organic compounds.

supply water characteristics	unit of measure	normal water		water with low salt content	
		min.	max.	min.	max.
Hydrogen ions (pH)		7	8.5	7	8.5
Specific conductivity at 20°C ($\sigma_{R, 20 °C}$)	µS/cm	300	1250	75	350
Total dissolved solids (c_R)	mg/l	(1)	(1)	(1)	(1)
Dry residue at 180°C (R_{180})	mg/l	(1)	(1)	(1)	(1)
Total hardness (TH)	mg/l $CaCO_3$	100 (2)	400	50 (2)	150
Temporary hardness	mg/l $CaCO_3$	60 (3)	300	30 (3)	100
Iron + Manganese	mg/l Fe+Mn	=	0,2	=	0,2
Chlorides	ppm Cl	=	30	=	20
Silica	mg/l SiO_2	=	20	=	20
Residual chlorine	mg/l Cl-	=	0,2	=	0,2
Calcium sulphate	mg/l $CaSO_4$	=	100	=	60
Metallic impurities	mg/l	0	0	0	0
Solvents, thinners, detergents, lubricants	mg/l	0	0	0	0

Tab. 3.a

(1)= values depend on the specific conductivity; in general:
$C_R \cong 0.65 * \sigma_{R, 20 °C}$; $R_{180} \cong 0.93 * \sigma_{R, 20 °C}$
(2)= not less than 200% of the chloride content in mg/l CL
(3)= not less than 300% of the chloride content in mg/l CL^-

There is not reliable relationship between hardness and conductivity of the water

Important:
- do not treat the water with softeners, this may cause the entrainment of foam, affecting the operation of the unit;
- do not add disinfectants or anticorrosive compounds to the water, as these are potential irritants;
- the use of well water, industrial water or water from cooling circuits and, in general, any potentially chemically or bacteriologically contaminated water is not recommended.

2.2 Drain water

this contains the same substances dissolved in the supply water, however in larger quantities;
- it may reach a temperature of 100 °C (212 °F);
- it is not toxic and can be drained into the sewerage system.

2.3 Drain tempering

The unit is fitted with a tempering valve that, opening at the same time as the drain valve, adds cold water to the drain line, thus ensuring a maximum temperature of the drain water of 60°C/140°F.

Note: The use of the drain tempering option, increase the flow rate of the drain water.

3. STEAM DISTRIBUTION

3.1 CAREL jet distributors (SDPOEM00**)

These can be fitted horizontally or vertically (hole facing upwards).
See page 31 for the models of distributors.

Assembly instructions (see Fig.3.a):

- make a series of holes on the wall according to the distributor drilling template;
- insert the distributor;
- fasten the flange using 4 screws.

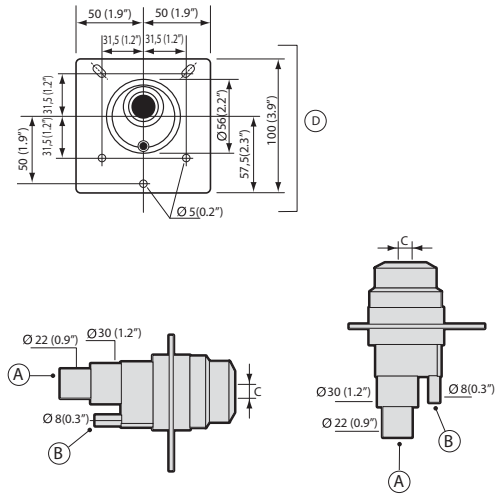

Fig. 3.a

Key:

A. steam inlet
B. condensate drain
C. steam outlet.
the dimensions of the hole vary depending on the models of distributor:
model SDPOEM0000: hole made manually, up to 30 mm (1.2") in diameter);
D drilling template

Note: if steam hoses with an inside diameter of 30 mm (1.2") are used, remove the 22 mm (0.9") steam inlet section.

3.2 CAREL linear distributors for air ducts (DP***DRU)

Install away from obstacles (curves, branches, changes in cross-section, grills, filters, fans).
Minimum distance between the distributor and the obstacle: 1/1.5 m (3.3/4.9 ft). Increase the distance if:

- the air speed increases in the duct,
- the relative humidity of the air increases before and after humidification,
- the turbulence decreases.

See page 33 for installation examples.

Assembly instructions (see Fig.3.b):

- make a series of holes on the wall according to the distributor drilling template (included in the packaging with the distributor);
- insert the distributor with the steam holes facing upward;
- fasten the flange using 4 screws.

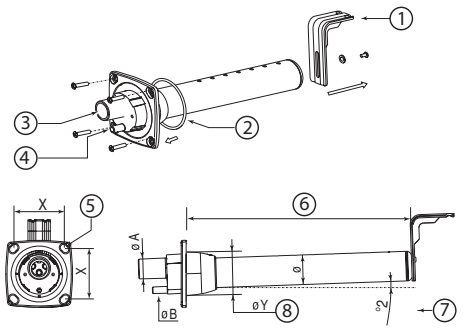

Fig. 3.b

Key:

1 "L"-shaped mounting support (where featured)
2 flange gasket
3 steam inlet (ØA)
4 condensate drain (ØB)
5 screw diameter (see the instruction sheet supplied with the distributor)
6 length (depending on the model of distributor, see par. "10.5" page 38)
7 angle (around 2°) for draining the condensate.
8 diameter of the hole on the wall (ØY)

Dimensions in mm (in)

	CAREL linear distributors		
	DP***D22RU	DP***D30RU	DP***D40RU
ØA	22 (0.9")	30 (1.18")	40 (1.57")
ØB	10 (0.4")	10 (0.4")	10 (0.4")
ØY	58 (2.3")	68 (2.7")	89 (3.5")
Ø	35 (1.4")	45 (1.8")	60 (2.4")
X	68 (2.7")	77 (3.0")	99 (3.9")

Tab. 3.a

Important:

1. fit the distributor at a slight incline (at least 2°, to prevent the return of condensate);
2. the "L"-shaped mounting support (see part 1 Fig. 3.c) is supplied with steam distributor models from DP085* to DP205*. For shorter lengths, the support can be supplied as an option (code 18C478A088).

3.3 CAREL steam blowers (VSDU0A*, models UE001 to UE018 only)

Steam distributors for humidifiers with flow rates up to 18 kg/h (39.7 lb/h). Can be connected on top of the humidifier, or separately in another location (see the figure below).

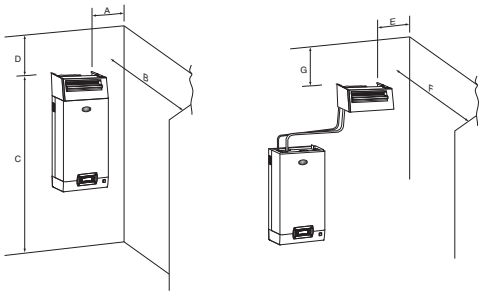

DIMENSIONS (m)	A	B	C	D
	>0,5	>5	≥2,1	>1

DIMENSIONS (m)	E	F	G
	>0,5	>5	>1

Fig. 3.c

Important: For correct distribution of the steam, observe the distance shown in the figure above.

3.4 Steam hoses

- Use CAREL hoses (max. 4 m long, see "Models of steam hoses", page 30). Rigid pipes may break and cause steam leaks;
- avoid the formation of pockets or traps (causes of condensate);
- avoid choking the hose due to tight bends or twisting;
- fasten the end of the hose to the connectors on the humidifier and the steam distributor using metal clamps, so that these do not detach due to the high temperature;
- avoid situations that cause stress on the outlet of the steam cylinder.

3.5 Condensate drain hose

During the operation of the humidifier some of the steam may condense, causing a decline in efficiency and noise (gurgling).
To drain the condensate, connect a drain hose with a drain trap and a minimum slope of 5° to the bottom of the humidifier (see Fig. 3.d). CAREL condensate drain hoses: code 1312353APG

Important: he drain trap in the condensate drain hose must be filled with water before starting the humidifier.

Example of correct and incorrect installation of the steam hose and condensate drain hose.

Final checks

- ☒ the steam outlet hoses run upwards and the distributor has a minimum incline of 2° upwards (see Fig. 3.c);
- ☒ the ends of the hose are tightened to the fittings with metal clamps;
- ☒ the curves in the tubing are sufficiently wide (radius > 300 mm / 11.8") so as to not cause bending or choking;
- ☒ the steam hose has no pockets or traps for condensate to form;
- ☒ the paths of the steam and condensate hoses are as described in this chapter (see Fig. 3.d);
- ☒ the length of the steam hose is no greater than 4 metres (13.1 feet);
- ☒ the incline of the steam hose is sufficient to allow correct draining of the condensate (> 20° for the upward sections, > 5° for the downward sections);
- ☒ the incline of the condensate hose is at least 5° at every point;
- ☒ the condensate hose always follows a downwards path and features a drain trap (filled with water before starting operation) to avoid steam being released.

YES

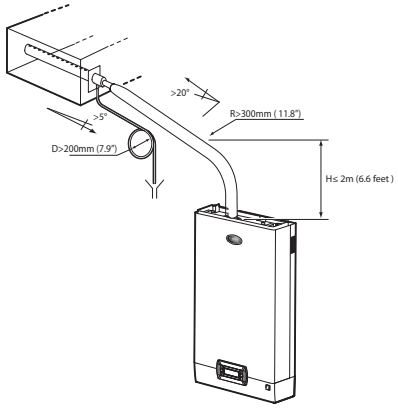

All UE models

YES

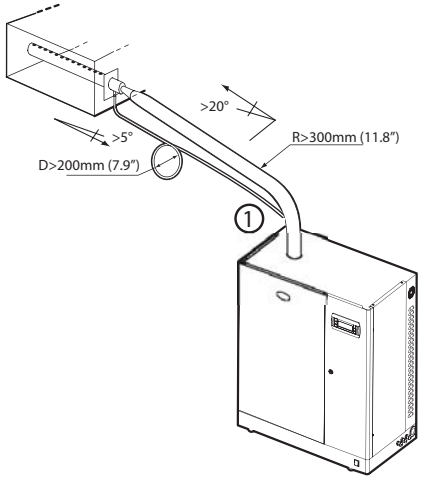

Models UE25 to UE65
(1) extend the hose inside the humidifier to the bottom tank.

YES

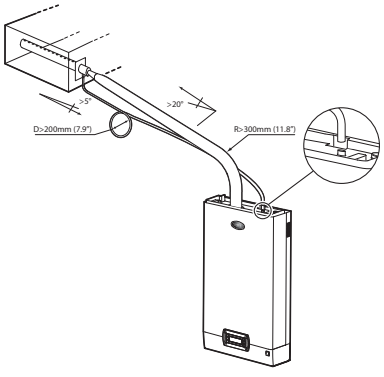

Models UE001 to UE025
(1): connection with fill tank

NO

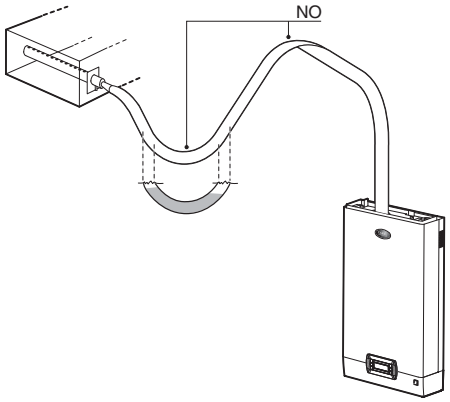

All UE models

Fig. 3.d

4. ELECTRICAL CONNECTIONS

4.1 Preparing the electric cableways

Models UE001 to UE018

outside unit, bottom view

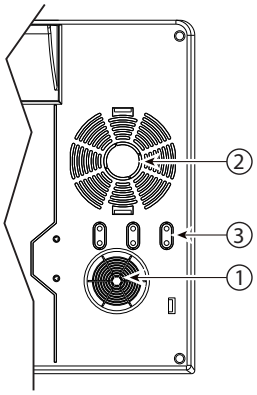

inside unit, top view

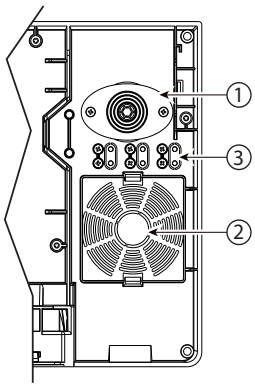

Fig. 4.a

Models UE025 to UE065

outside unit, side view

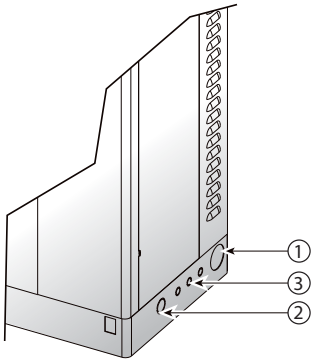

Fig. 4.b

Key to Figs. 4.a & 4.b:

1. power cable inlet;
2. optional utility cable inlet (after drilling).
3. probe cable inlet. On models UE001 to UE018, remove the plastic "tab" and use it to secure the cable (held in place by the screws provided).

4.2 Power cable connection

Before making the connections, ensure that the machine is disconnected from the mains power supply.

Check that the power supply voltage of the appliance corresponds to the value indicated on the rating plate inside the electrical panel. Insert the power and ground connection cables into the electrical panel compartment using the tear-proof cable gland supplied, or through the cable gland with cable stop, and connect the ends to the terminals (see Fig. 4.c). The humidifier power line must be fitted, by the installer, with a disconnecting switch and fuses protecting against short circuits. Table 11.a lists the recommended cross-sections of the power supply cable and the recommended fuse ratings; note, however, that this data is purely a guide and, in the event of non-compliance with local standards, the latter must prevail.

Note: to avoid unwanted interference, the power cables should be kept apart from the probe signal cables.

Single-phase models

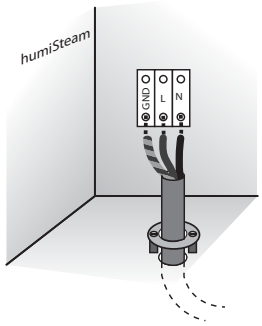

Three-phase models

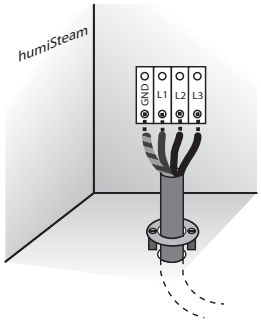

Fig. 4.c (view inside unit, electrical compartment)

Important: connect the yellow-green cable to the earth point (GND).

① In the 400 V three-phase models, also connect the neutral (N)

4.3 Steam production control signals (M2.1 - M2.7)

Depending on the type of signal used, steam production can be enabled and/or managed in different ways (ON/OFF or modulating)..
Steam production is enabled by keeping terminals M2.4 and M2.5 closed.

1. Enable steam production using:
HUMIDISTAT (ON/OFF action)
- connect inputs M2.2 and M2.3 (production request) to a humidistat;
- jumper inputs M2.4 and M2.5 (enable);
- set parameter A0=0 to enable the ON/OFF action.

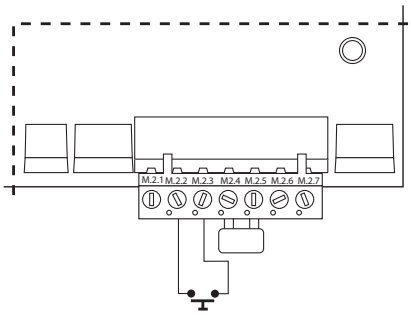

Fig. 4.d

HUMIDISTAT and REMOTE CONTACT (ON/OFF action)
- connect inputs M2.2 and M2.3 (production request) to a humidistat;
- connect inputs M2.4 and M2.5 (enable) to a remote contact (e.g.: switch, timer,…)
- set parameter A0=0 to enable the ON/OFF action.

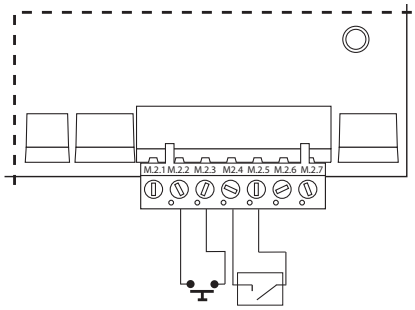

Fig. 4.e

2. Enable and control steam production using:
PROPROTIONAL EXTERNAL CONTROLLER (modulating action)
- jumper inputs M2.4 and M2.5 (enable)
- connect outputs M2.2 and M2.3 (production request) to an external controller
- iset parameter A0=1 to enable the modulating action (see chap. 7) and parameter A2 depending on the signal chosen (0 to 10 V, 2 to 10V, 0..20mA, 4 to 20 mA) (see chap. 7).

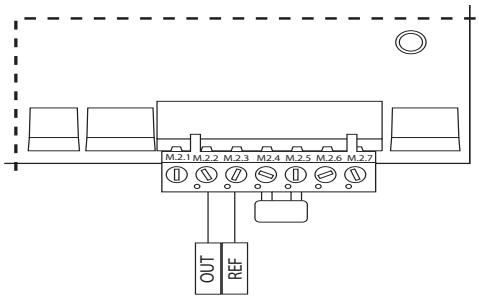

Fig. 4.f

PROPORTIONAL EXTERNAL CONTROLLER and REMOTE CONTACT (modulating action)
- connect inputs M2.4 and M2.5 to a remote contact (enable)
- connect outputs M2.2 and M2.3 (request) to an external controller
- set parameter A0=1 to enable the modulating action (see chap. 7) and parameter A2 depending on the signal chosen (0 to 10 V, 2 to 10V, 0…20V, 4 to 20 mA) (see chap. 7).

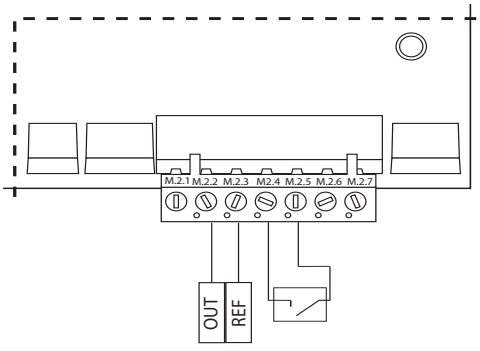

Fig. 4.g

Note: in industrial environments (IEC EN61000-6-2) the signal cables running from the unit must not exceed 10 m (33 ft)[1] in length: steam production signal cable (terminals M2.1...M2.3), remote on/off input (terminals M2.4...M2.5) and cable shields for RS485 communication.

4.4 Alarm contact (M5.1 - M5.2)

Contact available for the remote signalling of one or more alarms.

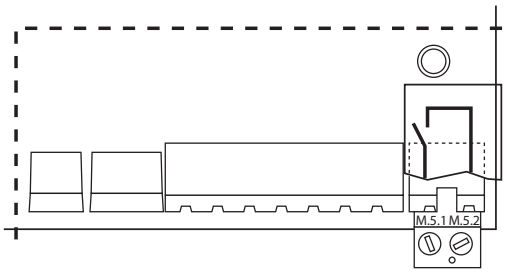

Fig. 4.h

Electrical specifications: 250 Vac; Imax: 2 A resistive 2 A inductive.

Note: use clamps on the relay terminal blocks (alarm, utilities) to prevent the cables from being detached.

4.5 Auxiliary contact: production request present, external fan control) (M14.1 - M14.3)

Relay contact that indicates the presence of the steam production request. It can also be used to control an external fan (see chap. 12.7)

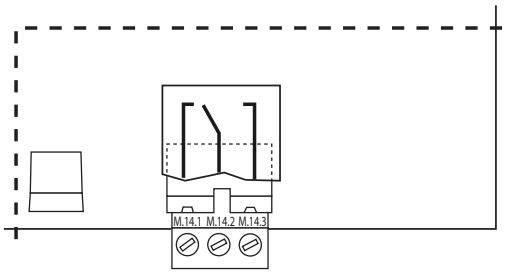

Electrical specifications: 250 Vac; Imax: 8 A resistive 2 A inductive.

Final checks

The following conditions represent correct electrical connection:

- ☒ the rated voltage of the appliance corresponds to the rated supply voltage;
- ☒ the fuses installed are suitable for the line and the power supply voltage;
- ☒ a mains disconnect switch has been installed to disconnect power to the humidifier when required;
- ☒ the humidifier has been correctly earthed;
- ☒ the power cable is fastened using the tear-proof cable gland;
- ☒ terminals M2.4 and M2.5 are jumpered or connected to an enable-operation contact;
- ☒ if the humidifier is controlled by an external control device, the earth of the signal is electrically connected to the controller earth.

5. REMOTE TERMINAL AND SUPERVISORY NETWORK

5.1 Remote display terminal

The display terminal can be detached from the humidifier and moved up to 30 m (98 feet) away.

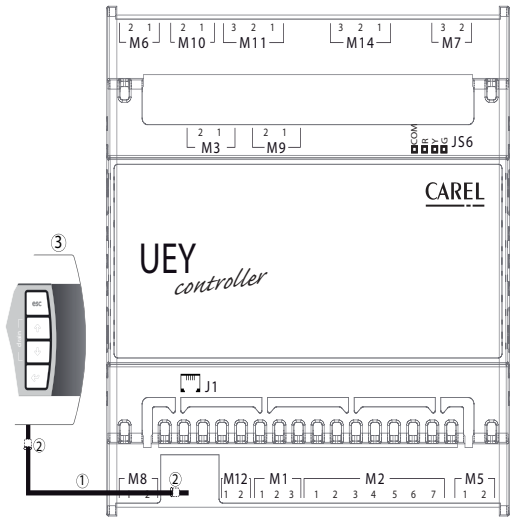

Fig. 5.a

Key:

1 telephone cable 6 wires (up to 10 m (33 ft)[1] distance);
2 two EMC filters (code 0907858AXX) to be applied to the ends of the telephone cable;
3 remote display terminal.

Note: to fill the empty space left by the display terminal on the humidifier, use CAREL kit code HCTREW0000.

[1] For lengths greater than 10 m (33 ft) use shielded cable with the shield connected to PE both on the terminal side and the controller side

5.2 RS485 supervisory network (M1.1-M1.3)

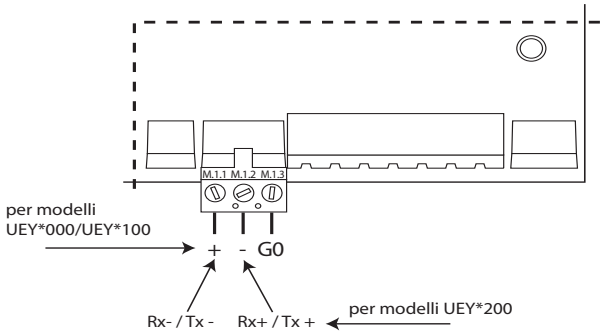

Fig. 5.b

Important: for the RS485 connections in household (IEC EN 55014-1) and residential (IEC EN 61000-6-3) environments, use shielded cable (with shield connected to PE both on the terminal side and the controller side) with maximum shielded cable length: specified by the EIA RS485 protocol, equivalent to European stan-dard CCITT V11, using shielded twisted pair cable, AWG26, 485 input stage impedance 1/8 unit-load (with this configuration, a maximum of 256 devices can be connected) laid in separate conduits from the power cables

6. STARTING AND USER INTERFACE

Before starting the humidifier, check:

- ☒ water connections: chap. 2. In the event of water leaks do not start the humidifier before having resolved the problem;
- ☒ steam distribution: chap. 3 and electrical connections chap. 4 .

6.1 Starting

1 

2 if the cylinder is new, run a pre-wash cycle by pressing ENTER + DOWN for 5 sec. (the cylinder is filled and emptied three times, cleaning the inside walls from impurities).
A display shows the symbol PRE CIn

6.2 Stopping

1 empty the water in the cylinder to avoid stagnation (see paragraph 6.6 "Manually drain the water in the cylinder").

2 

6.3 Display

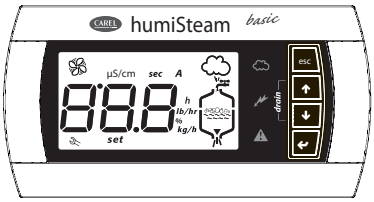

Fig. 6.a

Key:

drain	manually drain the cylinder (see paragraph 6.6)
	power supply (green LED)
	humidifier operating (yellow LED) Flashing: steam production not yet in steady operation Steady: steam production in steady operation
	alarm (red LED, not flashing) Alarm activated: LED flashing and buzzer active If an alarm is active pressing ESC mutes the buzzer and the LED comes on steady, pressing ESC again resets the alarms (see Chap. 8)
µS/cm	conductivity value
sec	time in seconds
A	instant current value in Amperes
h	real hour counter
lb/hr	steam flow-rate (Imperial system)
%	steam production as a percentage of rated capacity
kg/h	steam flow-rate (international system, default)
set	parameter programming in progress (parameter setup)
	maintenance request (alarm active) or display alarm log (HYS)
	on steady: external fan or steam production active. Flashing: external fan or steam production awaiting start/ stop
888	3 digits, after 999 the display shows 100 to indicate 1000 (only three digits plus point - between the first and the second digit- are displayed).
	steam production in progress cylinder filling in progress foam in the cylinder presence water in the cylinder cylinder water drain in progress

6.4 Keypad

key	function
Esc	return to the previous display
	from the main screen: pressed for 5 seconds disables/ enables the humidifier
UP	from the main screen: display the humidification values (current, conductivity,....), see the following paragraph
	from the list of parameters: circular navigation of the parameters and set the values
DOWN	from the main screen: display the humidification values (current, conductivity,....)
	from the list of parameters: circular navigation of the parameters and set the values
ENTER (PRG)	for 2 seconds: access the list of parameters
	from the list of parameters: select and confirm (like the "Enter" key on a computer keyboard)

6.5 Main display

The display on the humidifier normally shows the current steam production (kg/h, basic display).
To display other values, press UP or DOWN and scroll the following list:

- input signal (0-100%, or ON/OFF if A0=0)
- access alarm log (HYS) (**)
- set maximum steam production (parameter P0) (*)
- current (A)
- conductivity (µS/cm)
- cylinder hour counter (h)

To return to the basic display, press ESC.
Parameter C0 (see chap. 7) can be used to change the value of the basic display (default: current steam production).

(*) To modify the maximum steam output (P0) press:
- ENTER (display: ***set***)
- UP or DOWN to set the value percentage of production (from 20 to 100%)
- ENTER to confirm the new value

Press ESC to return to the main screen
Parameter P0 can also be accessed from the list of parameters (see chap. 7).

(**) To display the alarm log (HYS) press:
- ENTER (the most recent alarm is shown)
- UP or DOWN to scroll the list of alarms in chronological order

press ESC to return to the main screen
To delete the list of alarms press UP and DOWN for 5 seconds (inside the alarm log), when the list has been reset the display will show 'res'.

6.6 Disabling

The humidifier can be disabled in 3 different ways:
- Opening contact M2.4 and M2.5 (enable) : the display shows C--
- From serial (see Chap. 7 Digital 2) : the display shows S--
- From terminal (see ESC button) : the display shows t--

6.7 Recalling the manufacturer defaults

From the main screen press ENTER until the password screen is shown:
- Enter the password 50
- The message dEF is displayed, flashing

Confirm by pressing ENTER or exit by pressing ESC
If no button is pressed for 30 seconds, the display returns to the main screen.

6.8 Visualization release Software

1) when swith-on the unit to display "rel. x.y "(example rel. 1.0)
2) during operation
a) to display: by main mask press ESC and UP appear in sequence: the size dell'umidificatore, the voltage, the number of phases and the software release
b) the network by means of variable whole 81. Es. format = # # #. # "(eg., 12 = release 1.2)"

6.9 Match digit (match between the softwares of board and terminal)

humiSteam basic verifies the matching between the softwares of the controller and the terminal at the start-up. The 8th digits for board and 9th for terminal of both codes must be equal.
If there is no match, on power-up after displaying the software release, and in normal operation when pressing UP+PRG, the red LED will remain on for 5 seconds, and the following error message will be displayed:

"X – Y", where "X" and "Y" are the 2 different 8th digits. Refer to the after-sales service.

6.10 Reset cylinder hour counters

- Access parameter 'da' (see chap. 7)
- press UP and DOWN for 5 seconds

When the counter has been reset, the display shows 'res'.

6.11 Parameters: Saving/recalling the user settings

From the main screen, a copy of the user settings can be saved at any time, and then later recalled.

To save the settings::
From the main screen press:
- ENTER for 2 seconds,
- enter the password 51 using the UP or DOWN button and press ENTER, the message UbP (Backup User parameters)
- press ENTER: the message -L- is displayed, flashing
- press UP or DOWN, the message–S- (Save) is displayed, flashing,
- press ENTER to save a copy of the user settings, or press ESC to cancel the operation

NOTE: the copy of the user parameters saved previously will be overwritten with current user settings.

To recall the settings::
From the main screen press:
- ENTER for 2 seconds,
- enter the password 51 using the UP or DOWN button and press ENTER, the message UbP (Backup User parameters)
- press ENTER: the message -L- (Loading) is displayed flashing,
- press ENTER to recall the previously saved copy of the user settings, or press ESC to cancel the operation.

If no button is pressed for 30 seconds, the display returns to the main screen, without performing the operation.

6.12 Manually drain the water in the cylinder

Total drain in operation

Press UP and DOWN together for 2 seconds (the message 'dr' on the display alternating with 'tot' indicates the function has been activated). Press UP and DOWN again for 2 seconds to stop the drain cycle. The drain cycle in any case ends automatically.

7. CONFIGURATION PARAMETERS

7.1 Accessing and setting the parameters

The configuration parameters are used to select and control the functions and the status of the humidifier.

From the main screen press:
- ENTER for 2 seconds,
- enter the password 77 using UP or DOWN,
- ENTER to confirm and access the list of parameters,
- UP or DOWN to scroll the list cyclically,
- ENTER to select a parameter (display: 'set'),
- UP to modify (increase) the value of the parameter. To scroll the values faster press UP together with DOWN,
- DOWN to modify (decrease) the value of the parameter. To scroll the values faster press DOWN together with UP,
- ENTER to save the new value and return to the list of parameters, or ESC to return to the list without saving the new value,

Press ESC to return to the main screen.

7.2 Basic parameters

Parameter		UOM	range	def	notes
P0	maximum production (also see paragraph 6.5)	%	20 to 100	100	
A0	operating mode 0= ON/OFF control 1= proportional	-	0 to 1	1	
A1	unit of measure 0= kg/h; 1= lb/h	-	0 to 1	0	
A2	type of production request signal (the parameter can be displayed when A0=1) 1=0...10 V; 2= 2...10 V; 3= 0...20 mA; 4= 4...20 mA	-	1 to 4	1	
A6	Relay M14 activation delay for signalling presence of steam production request / activating external fan	s	0 to 300	0	Visible only if function activated (parameter b1, see par 11.6)
A7	Relay M14 deactivation delay for signalling presence of steam production request / deactivating external fan	s	0 to 300	180	Visible only if function activated (parameter b1, see par 11.6)
C0	value normally displayed 1= input/control signal; 2= steam prod.; 3= hour counter; 4= conductivity; 5= current	-	1 to 5	2	

7.3 Advanced parameters

Parameter		UOM	range	def	notes
b1	optional functions (see paragraph 11.6)	-	0 to 127	0	
b2	delay time when shutting down	s	0 to 120	0	
b4	Override conductivity of the water 0= automatic measurement	µS/cm	0 to 1250	0	Visible only if function activated (parameter b1, see par 11.6)
b5	conductivity pre-alarm threshold (*)	µS/cm	0 to 2000	1500	
b6	conductivity alarm threshold (*)	µS/cm	0 to .2000	2000	
b7	foam threshold setting 0= no foam detection; 1= max. foam detection sensitivity; 100= min. foam detection sensitivity	%	0 to 100	50	
b8	conductivity setting inside the cylinder in steady operation compared to rated value	%	50 to 200	100	
b9	duration of the drain to dilute cycle	%	50 to 200	100	
bb	cylinder maintenance limit time (in hours) 0= the cylinder life alarm "Cy" and maintenance required alarm "Mn" are not shown (*)	h	0 to 4000	3000	
bE	time limit between two periodical drain cycles (if periodical drain is enabled, b1 = 64)	h	1 to 240	24	
bf	days delay for drain due to inactivity (if the drain due to inactivity has been disabled, 8 set for b1)	days	1 to 199	3	

(*) after 999 the display shows 100 to indicate 1000 (only three digits plus point - between the first and the second digit- are displayed).

7.4 Serial connection parameters

Parameter		UOM	range	def	notes
C3	serial address	-	1 to 207	1	
C4	baud rate: 0= 9,600; 1= 19,200	-	0 to 1	0	
C5	supervisor: frame (character bits, parity, stop bits) 0=8,N,2 1=8,N,1 2=8,E,2 3=8,E,1 4=8,O,2 5=8,O,1 6=7,N,2 7=7,N,1 8=7,E,2 9=7,E,1 10=7,O,2 11=7,O,1		0 to 11	0	
C6	serial response transmission delay	ms	0 to 199	0	
C7	protocollo: 0= supervisione CAREL; 1=Modbus®	-	0...1	0	
C8	maximum time with no data (sent to controller) over RS485 to generate stop production and "SU" alarm	0.1s (ex: 50=5s)	0 to 300.0	5.0	see variable "I" 62

7.5 Read-only parameters

Parameter		UOM	range	def	notes
d1	display signal measured by external controller (only if A0=1)	%	0.0 to 199	-	
d3	display steam production (instant value)	kg/h	0.0 to 199	-	
d5	conductivity of the supply water (*)	µS/cm	0 to 1500	-	
d6	current	A	0.0 to 199	-	
d7	display maximum production (releated to P0 set range)	kg/h	0.0 to 199	-	
d9	rated steam production	kg/h	0.0 to 199	-	
da	cylinder hour counter (resettable)	h			
db	unit hour counter (read only)	h			

(*) after 999 the display shows 100 to indicate 1000 (only three digits plus point - between the first and the second digit- are displayed).

8. ALARMS

code display and symbol		var. code I89	meaning	causes	solution	reset (press)	alarm relay activation	effect	red LED signal on board (*) (if terminal not connected)
E0	-	1008Hex	calibration parameter software verification errora	internal memory error	if the problem persists, contact the CAREL service center	--	yes	humidification stopped	3 fast flashes
E1	-	1004Hex	parameter configuration error	error in the parameters user	if the problem persists, contact the CAREL service center	--	yes	humidification stopped	4 fast flashes
EH	**A**	1010Hex	excess current	over-current at the electrodes; probable electrode malfunction or water conductivity temporarily too high (especially when starting after a short stop)	1. check the operation of the drain pump 2. check the seal of the fill electrovalve when not energised 3. drain part of the water and re-start	AUTO	yes	humidification stopped	2 fast flashes
EP		1020Hex	no production	excessive reduction in production , or cylinder completely depleted or water	Perform maintenance on the cylinder	ESC	yes	humidification stopped	4 slow flashes
CY		3001Hex	cylinder life pre-alarm	the cylinder full limit of 1500 h (default)	perform maintenance and/ or replace the cylinder	ESC (the alarm is reactivated after 50 hrs)	no	signal only	7 fast flashes
EF		2004Hex	no water		Check: • water supply and fill valve; • whether the manual drain is open; • blockage of the filter on the fill solenoid valve; • whether there is excessive backpressure in steam outlet, preventing the flow of water into the cylinder by gravity; • that the steam outlet hose is not choked or that there are no pockets of condensate; • that the power cables are connected to the cylinder	automatic (after 10 minute waiting time)	yes (in 10 minute waiting time)	humidification stopped for 10 minutes only	3 slow flashes
Ed		2008Hex	failed drain		check the drain pump and drain connection	ESC	yes	humidification stopped	5 slow flashes
CP		3004Hex	cylinder being depleted signal		cylinder life ending, perform maintenance and/ or replace the cylinder	AUTO	no	signal only	6 slow flashes
CL		3008Hex	cylinder depleted signal		cylinder life ended, perform maintenance and/or replace the cylinder	AUTO	no	signal only	10 slow flashes
EA		3002Hex	foam	excessive foam in the cylinder during boiling. the formation of foam is generally due to the presence of surfactants in the water (lubricants, solvents, detergents, water treatment agents, softeners) or an excessive concentration of dissolved salts.	1. drain the water supply lines 2. clean the cylinder 3. check for the presence of softeners (in this case, use another type of water or reduce the softening)	ESC	no	signal only	9 slow flashes
E2		3010Hex	memory backup fails	internal memory error	if the problem persists, contact the CAREL service center	--	no	signal only	6 fast flashes
Mn		1001Hex	end of cylinder life		the cylinder has exceeded the limit of 2000 hours, replace the cylinder	reset hour counter	yes	humidification stopped	8 fast flashes

code display and symbol		var. code I89	meaning	causes	solution	reset (press)	alarm relay activation	effect	red LED signal on board (*) (if terminal not connected)
EU		2001Hex	cylinder full	excessive water level when unit producing steam	with the machine off: 1. check for any leaks from the fill electrovalve or the condensate return pipe 2. check that the level sensors are clean total shut-down pipe 2. check that the level sensors are clean total shut-down	--	no	signal only	8 slow flashes
EC	***µS/cm***	1002Hex	high conductivity	high supply water conductivity	1. check water conductivity 2. if the problem persists, change the source of supply water or install a suitable treatment system (demineralisation, even partial). N.B.: the problem will not be resolved by softening the supply water.	AUTO	no (b5) yes (b6)	signal only humid. stopped	5 fast flashes
E3	-	2002Hex	failed connection of modulating signal	Cable interrupted / disconnected / improperly connected.	check the reference signal in 4 to 20 mA or 2 to 10V mode)	AUTO	yes	humidification stopped	7 slow flashes
SU		2040Hex	serial disconnected			AUTO			2 slow flashes
Pre/Cln	-		cylinder cleaning started signal			--	--	--	none
dr	-		cylinder drain activated			--	--	--	none
dr / TOT	-		complete drain due to inactivity			--		--	(both codes alternate on display)
AF			antifoam active			--	--	--	none

Press ESC once to mute the buzzer, press ESC a second time to reset the alarm.
(*) Quick flash: 0.2 seconds ON and 0.2 seconds OFF
Slow flash: 1 second ON and 1 second OFF

9. MAINTENANCE AND SPARE PART

9.1 Spare parts for models UE001 to UE018

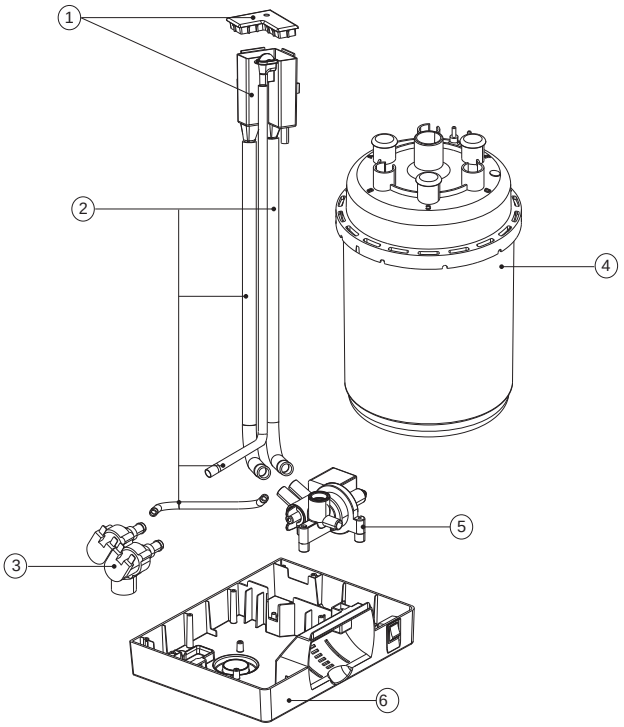

Fig. 9.a

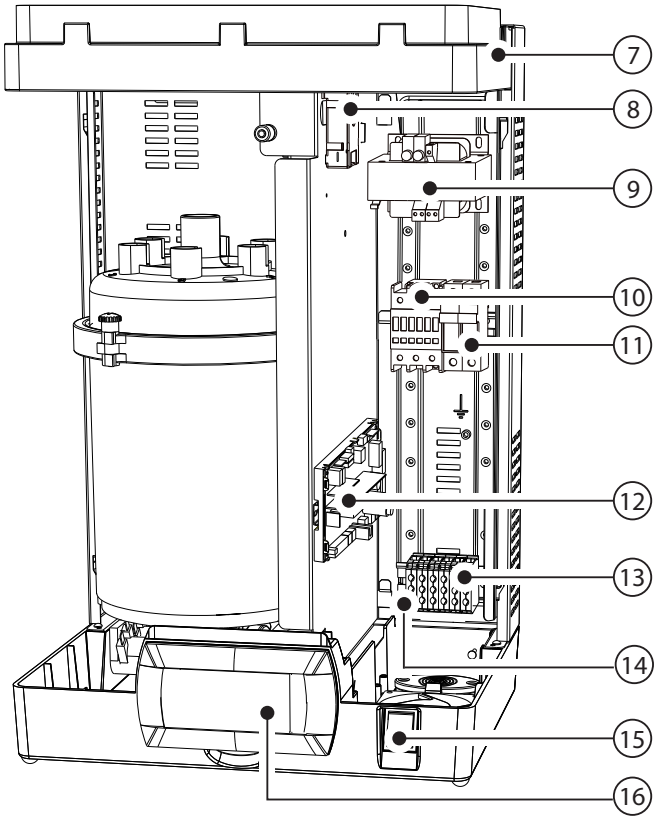

Fig. 9.b

Key to Figs. 9a & 9.b:

1 fill tank
2 internal tubing kit
3 fill solenoid and drain tempering valve kit
4 cylinder
5 manifold with drain pump
6 plastic base
7 plastic humidifier top
8 TAM (transformer for measuring the current)
9 transformer
10 contactor
11 fuse holder F1-F2
12 electronic controller
13 power terminals
14 fuse holder F3
15 switch
16 terminal with display

Table of water circuit, electrical and electronic spare parts, UE001 to UE018

	spare part code								position	fig.
	UE001	UE003	UE005		UE008	UE009	UE010	UE015	UE018		
			460-575 3ph	208-230 1ph 208-230 3ph						
Water circuit										
Fill tank + conductivity meter	UEKVASC100								1	9.a
fill solenoid and drain tempering valve kit	KITFD11206					KITFD11211			3	9.a
Internal tubing kit	UEKT20000M								2	9.a
Plastic humidifier base	UEKBOTTOM0								6	9.a
Plastic humidifier top	UEKTOP0000								7	9.b
Assembled f/d manifold + 230V pump	UEKDRAIN02								5	9.a
Electrical and electronics										
Display terminal	HCTLEYW0w0 (3)								16	9.b
TAM (current transformer)	UEKTAM0000								8	9.b
Contactor	UEKCONT100		UEKCONT200		UEKCONT100		UEKCONT200		10	9.b
Power transformer: 208-230-460-575/24 V	UEKTR30000								9	9.b
Electronic controller(1)	UEYxxv0z0i(2)								12	9.b
Fuse carrier (F1,F2)	URKFH10000								11	9.b
Fuse carrier (F3)	UEKFH10000								14	9.b
F1 - F2 power fuses	URKFUSE100								-	see electrical draw
F4 Transformer secondary fuse	URKFUSE500								-	see electrical draw
F3 Pump fuse	UEKFUSE200								-	see electrical draw
Connection cable between terminal and electronic controller	S90CONN002								-	

Tab. 9.a

(1) when ordering, as well as the controller code specify the complete code and serial number of the humidifier.
(2) xx: kg/h (01,.....65)
v: power supply (D=230V 1ph, M=460V 3ph, etc)
z: match digit board (8th code number of the card)
i: 0 single package / 1 multiple package
(3) w: match digit terminal (9th code number of the terminal)

Table of spare part codes, Single-phase cylinders UE001 to UE009, electrode and gasket kit

Model		UE001	UE003	UE005	UE009
STANDARD disposable cylinders	208/230 Vac 1~, conductivity 350 to 1250 µS/cm	BL0S1F00H2	BL0S1F00H2	BL0S2E00H2	BL0S3F00H2
SPECIAL disposable cylinders	208/230 Vac 1~, conductivity 75 to 350 µS/cm	BL0S1E00H2	BL0S1E00H2	BL0S2E00H2	BL0S3E00H2
SPECIAL openable cylinders	208/230 Vac 1~, conductivity 75 to 350 µS/cm	BLCS1E00W2	BLCS1E00W2	BLCS2E00W2	BLCS3E00W2
	208/230 Vac 1~, conductivity 350 to 1250 µS/cm	BLCS1F00W2	BLCS1F00W2	BLCS2E00W2	BLCS3F00W2
Electrode and gasket kit	208/230 Vac 1~, conductivity 75 to 350 µS/cm	KITBLCS1E2	KITBLCS2E2	KITBLCS2E2	KITBLCS3E2
	208/230 Vac 1~, conductivity 350 to 1250 µS/cm	KITBLCS1F2	KITBLCS2F2	KITBLCS2E2	KITBLCS3F2
Filter gasket kit		KITBLC1FG0	KITBLC2FG0	KITBLC2FG0	KITBLC3FG0

Tab. 9.b

Table of spare part codes, three-phase cylinders UE003 to UE018, electrode and gasket kit

Model		UE003	UE005	UE008	UE010	UE015	UE018
STANDARD disposable cylinders	208/230 VAC 3~, conductivity 350 to 1250 µS/cm	BL0T1B00H2	BL0T2A00H2	BL0T2A00H2	BL0T3A00H2	BL0T3A00H2	--
	460 VAC 3~, conductivity 350 to 750 µS/cm	BL0T1D00H2	BL0T2D00H2	BL0T2D00H2	BL0T3D00H2	BL0T3D00H2	BL0T3D00H2
	575 VAC 3~, conductivity 350 to 750 µS/cm		BL0T2D00H2	BL0T2D00H2	BL0T3D00H2	BL0T3D00H2	BL0T3D00H2
SPECIAL disposable cylinders	208/230 VAC 3~, conductivity 75-350 µS/cm	BL0T1A00H2	BL0T2A00H2	BL0T2A00H2	BL0T3A00H2	BL0T3A00H2	--
	460 VAC 3~, conductivity 75 to 350 µS/cm	BL0T1B00H2	BL0T2C00H2	BL0T2C00H2	BL0T3C00H2	BL0T3C00H2	BL0T3C00H2
	460 VAC 3~, conductivity 750 to 1250 µS/cm	BL0T1D00H2	BL0T2D00H2	BL0T2D00H2	BL0T3D00H2	BL0T3D00H2	BL0T3D00H2
	575 VAC 3~, conductivity 75 to 350 µS/cm		BL0T2C00H2	BL0T2C00H2	BL0T3C00H2	BL0T3C00H2	BL0T3C00H2
	575 VAC 3~, conductivity 750 to 1250 µS/cm		BL0T2D00H2	BL0T2D00H2	BL0T3D00H2	BL0T3D00H2	BL0T3D00H2
SPECIAL openable cylinders	208/230 VAC 3~, conductivity 75-350 µS/cm	BLCT1A00W2	BLCT2A00W2	BLCT2A00W2	BLCT3A00W2	BLCT3A00W2	--
	460 VAC 3~, conductivity 75 to 350 µS/cm	BLCT1B00W2	BLCT2C00W2	BLCT2C00W2	BLCT3C00W2	BLCT3C00W2	BLCT3C00W2
	460 VAC 3~, conductivity 350 to 750 µS/cm	BLCT1D00W2	BLCT2D00W2	BLCT2D00W2	BLCT3D00W2	BLCT3D00W2	BLCT3D00W2
	460 VAC 3~, conductivity 750 to 1250 µS/cm	BLCT1D00W2	BLCT2D00W2	BLCT2D00W2	BLCT3D00W2	BLCT3D00W2	BLCT3D00W2
	575 VAC 3~, conductivity 75 to 350 µS/cm		BLCT2C00W2	BLCT2C00W2	BLCT3C00W2	BLCT3C00W2	BLCT3C00W2
	575 VAC 3~, conductivity 350 to 750 µS/cm		BLCT2D00W2	BLCT2D00W2	BLCT3D00W2	BLCT3D00W2	BLCT3D00W2
	575 VAC 3~, conductivity 750 to 1250 µS/cm		BLCT2D00W2	BLCT2D00W2	BLCT3D00W2	BLCT3D00W2	BLCT3D00W2
Electrode and gasket kit	Electrode kit 208/230 Vac 3~, 75/350 µS/cm	KITBLCT1A2	KITBLCT2A2	KITBLCT2A2	KITBLCT3A2	KITBLCT3A2	--
	Electrode kit 208/230 Vac 3~, 350/1250 µS/cm	KITBLCT1B2	KITBLCT2A2	KITBLCT2A2	KITBLCT3A2	KITBLCT3A2	--
	Electrode kit 460 Vac 3~, 75/350 µS/cm	KITBLCT1B2	KITBLCT2C2	KITBLCT2C2	KITBLCT3C2	KITBLCT3C2	KITBLCT3C2
	Electrode kit 460 Vac 3~, 350/750 µS/cm	KITBLCT1D2	KITBLCT2D2	KITBLCT2D2	KITBLCT3D2	KITBLCT3D2	KITBLCT3D2
	Electrode kit 460 Vac 3~, 750/1250 µS/cm	KITBLCT1D2	KITBLCT2D2	KITBLCT2D2	KITBLCT3D2	KITBLCT3D2	KITBLCT3D2
	Filter gasket kit	KITBLC1FG0	KITBLC2FG0	KITBLC2FG0	KITBLC3FG0	KITBLC3FG0	KITBLC3FG0
	575 VAC 3~, conductivity 75 to 350 µS/cm		KITBLCT2C2	KITBLCT2C2	KITBLCT3C2	KITBLCT3C2	KITBLCT3C2
	575 VAC 3~, conductivity 350 to 750 µS/cm		KITBLCT2D2	KITBLCT2D2	KITBLCT3D2	KITBLCT3D2	KITBLCT3D2
	575 VAC 3~, conductivity 750 to 1250 µS/cm		KITBLCT2D2	KITBLCT2D2	KITBLCT3D2	KITBLCT3D2	KITBLCT3D2

Tab. 11.c

9.2 Spare parts for models UE025 to UE065

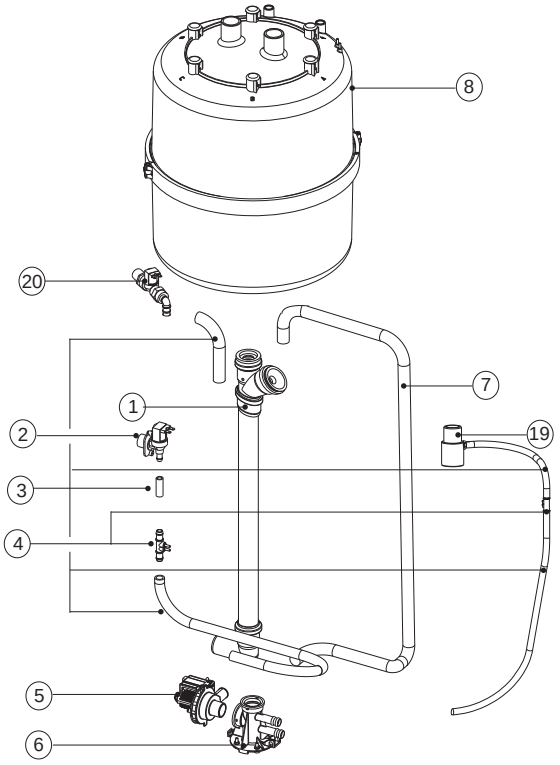

Fig. 9.c

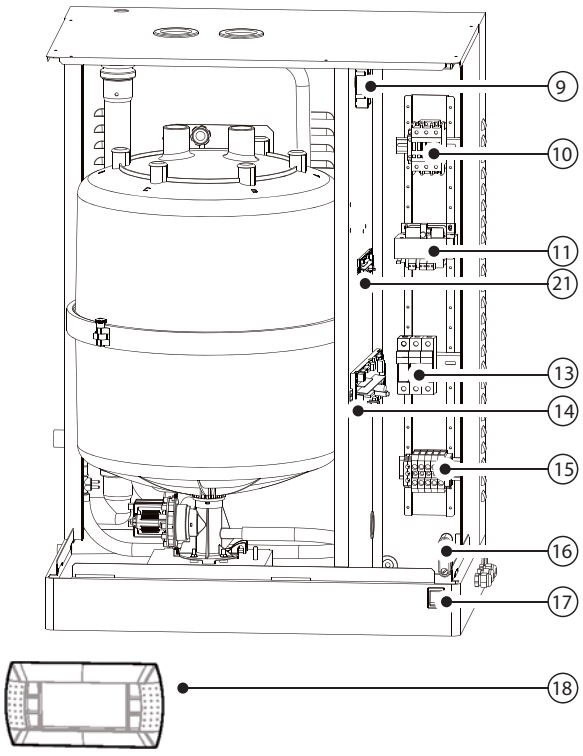

Fig. 9.d

Key:

1 drain circuit
2 fill solenoid valve kit
3 internal tubing kit
4 conductivity meter
5 drain pump kit
6 manifold
7 drain pump hose
8 cylinder
9 TAM (transformer for measuring the current)
10 contactor
11 transformer
13 fuse carrier
14 electronic controller
15 power terminals
16 cable clamp
17 switch
18 terminal with liquid crystal display (fitted on the cover of the electrical compartment)
19 kit outlet connector steam (only in the UE045(208-230Vac and UE065)
20 drain tempering valve
21 liquid level cutoff (only in the UE045(208-230Vac and UE065)

Table of water circuit, electrical and electronic spare parts, UE025 to UE065

Description	spare part code							Position	Figure
	UE025		UE035		UE045		UE065		
	230 V	400 V	230 V	400 V	400V	230 V			
Water circuit									
Drain pump hose	UEKDH00000							7	9.c
Manifold	UEKCOLL000							6	9.c
Drain pump kit	KITPSE0000							5	9.c
Internal tubing kit	UEKT10000L						UEKT1000XL	3	9.c
Double check valve kit	FWHDCV0000							-	
Conductivity meter kit	KITCN00000							4	9.c
Fill solenoid valve kit	KITVC10058						KITVC10070	2	9.c
Drain circuit	UEKDC00000						UEKDC10000	1	9.c
Electrical and electronics									
Display terminal	HCTLEYF0w0 (3)							18	9.d
TAM (current transformer)	UEKTAM0000							9	9.b
Contactor	URKCONT300	UEKCONT200	URKCONT300	URKCONT400	URKCONT300			10	9.d
Power transformer: 230/400-24V	UEKTR30000							11	9.d
Electronic controller	UEYxxv0z0i(2)							14	9.d
Fuse carrier	URKFH20000							13	9.d
Pump control relay	UEKRD00000							-	
F1 - F2 230 to 400Vac power fuses	UEKFUSE100							-	see wiring diagrams
F3 Pump fuse	UEKFUSE300	UEKFUSE100	UEKFUSE300	UEKFUSE100	UEKFUSE300	UEKFUSE100	UEKFUSE100	-	see wiring diagrams
F4 Transformer secondary fuse	UEKFUSE400							-	see wiring diagrams
Connection cable between terminal and electronic controller	S90CONN002							-	

Tab. 9.d

(1) when ordering, as well as the controller code specify the complete code and serial number of the humidifier.
(2) xx: kg/h (01,.....65)
v: power supply (K=230V 3ph, M=460V 3ph, etc)
z: match digit board (8th code number of the card)
i: 0 single package / 1 multiple package
(3) w: match digit terminal (9th code number of the terminal)

Table of spare parts for standard and special cylinders UE025 to UE065

Description		UE025	UE035	UE045	UE065
STANDARD disposable cylinders	208V 3ph cylinder, conductivity 350 to 1250 µS/cm	BL0T4C00H2	BL0T4B00H2	BL0T5A00H1	-
	230V 3ph cylinder, conductivity 350 to 1250 µS/cm	BL0T4C00H2	BL0T4B00H2	BL0T5B00H0	
	460V 3ph cylinder, conductivity 350 to 1250 µS/cm	BL0T4D00H2	BL0T4D00H2	BL0T4D00H2	BL0T5D00H0
	575V 3ph cylinder, conductivity 350 to 1250 µS/cm	BL0T4D00H2	BL0T4D00H2	BL0T4D00H2	BL0T5D00H0
SPECIAL disposable cylinders	208V 3ph cylinder, conductivity 75 to 350 µS/cm	BL0T4B00H2	BL0T4B00H2	BL0T5A00H1	--
	230V 3ph cylinder, conductivity 75 to 350 µS/cm	BL0T4B00H2	BL0T4B00H2	BL0T5A00H1	
	460V 3ph cylinder, conductivity 75 to 350 µS/cm	BL0T4D00H2	BL0T4C00H2	BL0T4C00H2	BL0T5C00H0
	575V 3ph cylinder, conductivity 75 to 350 µS/cm	BL0T4D00H2	BL0T4D00H2	BL0T4D00H2	BL0T5C00H0
SPECIAL openable cylinders	208V 3ph cylinder, conductivity 75 to 350 µS/cm	BLCT4B00W2	BLCT4B00W2	BLCT5A00W1	--
	230V 3ph cylinder, conductivity 75 to 350 µS/cm	BLCT4B00W2	BLCT4B00W2	BLCT5A00W1	
	208V 3ph cylinder, conductivity 350 to 1250 µS/cm	BLCT4C00W2	BLCT4B00W2	BLCT5A00W1	--
	230V 3ph cylinder, conductivity 350 to 1250 µS/cm	BLCT4C00W2	BLCT4B00W2	BLCT5B00W0	
	460V 3ph cylinder, conductivity 75 to 350 µS/cm	BLCT4D00W2	BLCT4C00W2	BLCT4C00W2	BLCT5C00W0
	460V 3ph cylinder, conductivity 350 to 1250 µS/cm	BLCT4D00W2	BLCT4D00W2	BLCT4D00W2	BLCT5C00W0
	575V 3ph cylinder, conductivity 75 to 350 µS/cm	BLCT4D00W2	BLCT4D00W2	BLCT4D00W2	BLCT5C00W0
	575V 3ph cylinder, conductivity 350 to 1250 µS/cm	BLCT4D00W2	BLCT4D00W2	BLCT4D00W2	BLCT5D00W0
Electrode and gasket kit	208V 3ph cylinder, conductivity 75 to 350 µS/cm	KITBLCT4B2	KITBLCT4B2	KITBLCT5A0	--
	208V 3ph cylinder, conductivity 350 to 1250 µS/cm	KITBLCT4C2	KITBLCT4B2	KITBLCT5A0	--
	230V 3ph cylinder, conductivity 75 to 350 µS/cm	KITBLCT4B2	KITBLCT4B2	KITBLCT5A0	
	230V 3ph cylinder, conductivity 350 to 1250 µS/cm	KITBLCT4C2	KITBLCT4B2	KITBLCT5B0	--
	460V 3ph cylinder, conductivity 75 to 350 µS/cm	KITBLCT4D2	KITBLCT4C2	KITBLCT4C2	KITBLCT5C0
	460V 3ph cylinder, conductivity 350 to 1250 µS/cm	KITBLCT4D2	KITBLCT4D2	KITBLCT4D2	KITBLCT5D0
	575V 3ph cylinder, conductivity 75 to 350 µS/cm	KITBLCT4D2	KITBLCT4D2	KITBLCT4D2	KITBLCT5C0
	575V 3ph cylinder, conductivity 350 to 1250 µS/cm	KITBLCT4D2	KITBLCT4D2	KITBLCT4D2	KITBLCT5D0
Gasket and filter kit		KITBLC4FG0	KITBLC4FG0	KITBLC4FG0	KITBLC5FG0

Tab. 9.e

9.3 Cleaning and maintenance of the cylinder

Replacement

Important: he cylinder must be only be replaced by qualified personnel, and with the humidifier unplugged from the power supply.

In normal conditions, the **disposable cylinders should be replaced after one year** (or 2500 hours of operation, if cleaned periodically), while the **openable cylinders last 5 years** (or 10,000 hours of operation, if cleaned periodically). They must be replaced immediately – even before the specified intervals – if any anomalies occur. For example, when the lime scale inside the cylinder prevents the correct flow of electric current.

Replacement procedure::

1. empty all the water (see chap. 6);
2. turn off the humidifier (switch "0"), and open the mains disconnect switch on the power supply (safety procedure);
3. wait for the humidifier and the cylinder to cool down;
4. remove the front cover;
5. disconnect the electrical cables from the cylinder;
6. release the cylinder from the locking device and lift it to remove it;
7. insert the new cylinder (make sure that the model and the power supply of the new cylinder correspond to the rated data);
8. fasten the cylinder;
9. reconnect the electrical cables to the cylinder;
10. replace the front cover;
11. switch on the humidifier;
12. reset cylinder operating hour counter (see parameters da , chap. 7);
13. Activate the wash new cylinder procedure, pressing ENTER + DOWN for 5 seconds

9.4 Mechanically draining the water in the cylinder

Drain due to gravity without activating the humidifier, recommended if:

- humidifier decommissioned;
- to empty the cylinder without switching the humidifier on.

Mechanical drain:

- make sure that the humidifier is not powered;
- remove the cover;
- activate the mechanical device under the cylinder (see part A, Fig. 9.e).

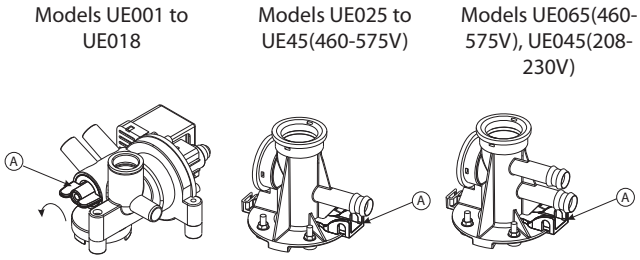

Fig. 9.e

Periodical checks

- **After one hour** of operation: check for any significant water leaks.
- **Every 15 days** or no more than 300 operating hours: check operation, the absence of significant water leaks, the general conditions of the casing. Check that during operation there are no arcs or sparks between the electrodes.
- **Every 3 months** or no more than 1000 operating hours:
  - disposable cylinders: check operation, the absence of significant water leaks and if necessary replace the cylinder;
  - openable cylinders: if there are significantly blackened areas, check the deposits on the electrodes and clean them, using the specific electrode and gasket kit.
- **Every year** or no more than 2500 operating hours:
  - disposable cylinders: replace;
  - openable cylinders: if there are significantly blackened areas, check the deposits on the electrodes and clean them, using the specific electrode and gasket kit.
- **After 5 years** or no more than 10,000 operating hours: replace the openable cylinder.

After extended operation, or when using water rich in salts, the solid deposits that naturally form on the electrodes may grow until attaching to the inside wall of the cylinder. If these deposits are conductive the heat generated may overheat the plastic until it melts, with the risk of very hot water being released.

Important: In the event of water leaks, disconnect the power supply from the humidifier as the water may conduct electricity.

9.5 Cylinder connection, three-phase models UE025 to UE065

production (kg/h)	conductivity (µS/cm)	power supply (V)	
		208-230	460-575
25	75/350 µS/cm	A	B
	350/1250 µS/cm	B	B
35	75/350 µS/cm	A	B
	350/1250 µS/cm	A	B
45	75/350 µS/cm	A	B
	350/1250 µS/cm	A	B
65	75/350 µS/cm	/	B
	350/1250 µS/cm	/	B

Tab. 9.f

The cable ends must be tightened with the top nut to 3 Newton • m (27 lbf-in). (units with BL*T5* cylinder only)

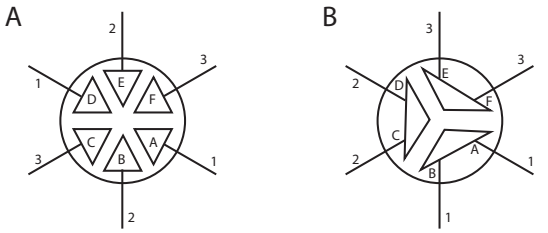

Fig. 9.f

Three-phase and sigle-phase models UE01 to UE018

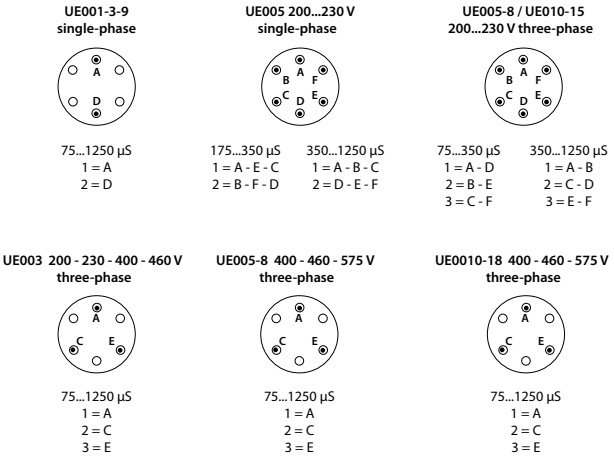

9.6 Cleaning and maintenance of the other components

- when cleaning plastic components do not use detergents or solvents;
- scale can be removed using a solution of 20% acetic acid and then rinsing with water.

Maintenance checks on other components:

- fill solenoid valve. After having disconnected the cables and the tubing, remove the solenoid valve and make sure the inlet filter is clean; if necessary, clean with water and a soft brush;
- manifold with drain pump. Check that there are no solid residues in the cylinder attachment, remove any impurities. Check that the gasket (o-ring) is not damaged or cracked, replace if necessary. Check that there are no solid residues in the drain hose;
- drain pump. Disconnect the power supply, remove the pump and clean any impurities. Clean the tank from any deposits and check that the water flows freely from the tank to the drain (corresponding to the drain pump);
- fill tank. Check that there are no obstructions or solid particles and that the conductivity measuring electrodes are clean, remove any impurities and rinse;
- internal tubing kit. Check that the pipes and hoses are free and clear of impurities, remove any impurities and rinse.

Important: after having replaced or checked the water circuit, make sure that the connections are tight. Restart the unit and run a number of fill and drain cycles (from 2 to 4), after which, applying the safety procedure, check for any water leaks.

Fuses in the auxiliary circuits

Fuses	UE001 to 018	UE 025 to 065 (460-575V)	UE025-045 (208-230V)
F1. F2	1 A fast-blow, 10.3x38		2 A fast-blow, 10.3x38
F3	1 A fast-blow, 5x20 ceramic	1 A fast-blow, 10.3x38	
F4	4 A T slow-blow 5x20 ceramic		

Tab. 9.g

10. WIRING DIAGRAMS

10.1 Diagram of single-phase models UE001 to UE009 (208-230V)

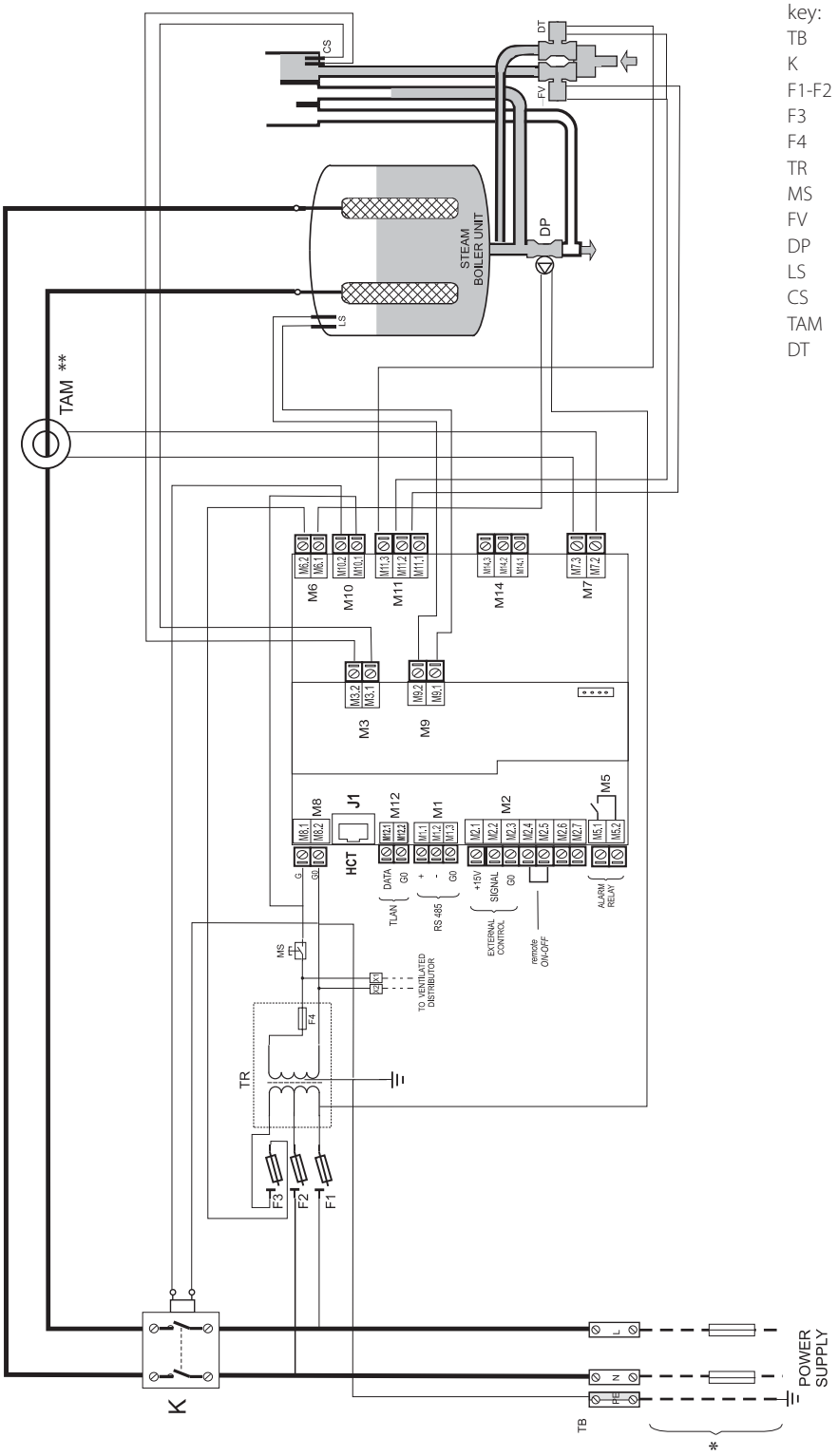

key:

TB	terminal block
K	contactor
F1-F2	primary fuses
F3	fuse protection drain pump
F4	secondary fuse
TR	transformer
MS	manual switch
FV	fill valve
DP	drain pump
LS	high level electrodes
CS	conductivity meter
TAM	external TAM
DT	valve drain tempering

Fig. 10.a

(**) Important: for the TAM configuration and connection see par. 11.1

10.2 Diagram of three-phase models UE003 to UE018 (208-230-460-575V)

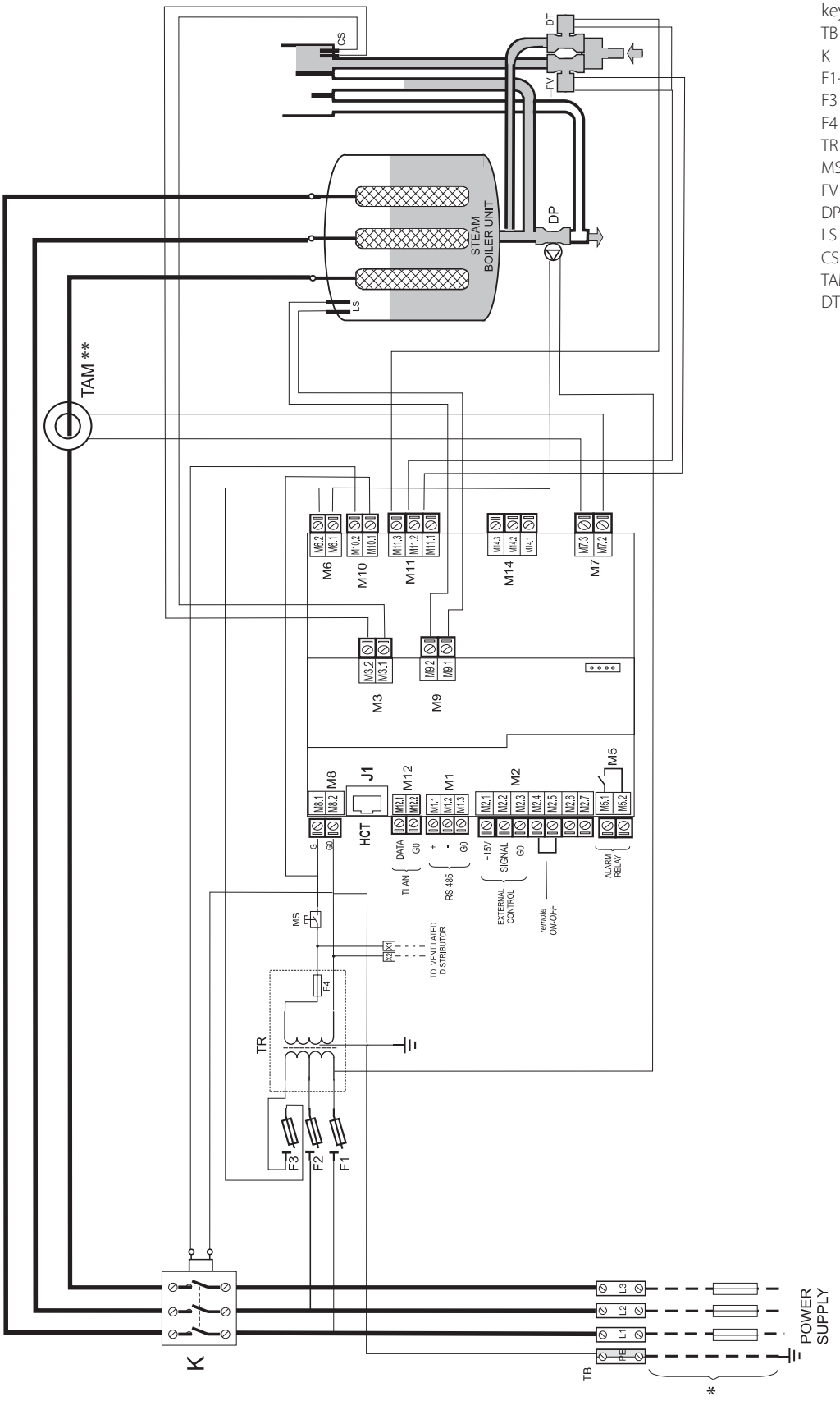

key:

TB	terminal block
K	contactor
F1-F2	primary fuses
F3	fuse protection drain pump
F4	secondary fuse
TR	transformer
MS	manual switch
FV	fill valve
DP	drain pump
LS	high level electrodes
CS	conductivity meter
TAM	external TAM
DT	valve drain tempering

Fig. 10.b

(**) Important: for the TAM configuration and connection see par. 11.1

10.3 Diagram of three-phase models UE025 (208-230-460-575V) and UE045 (460-575 V)

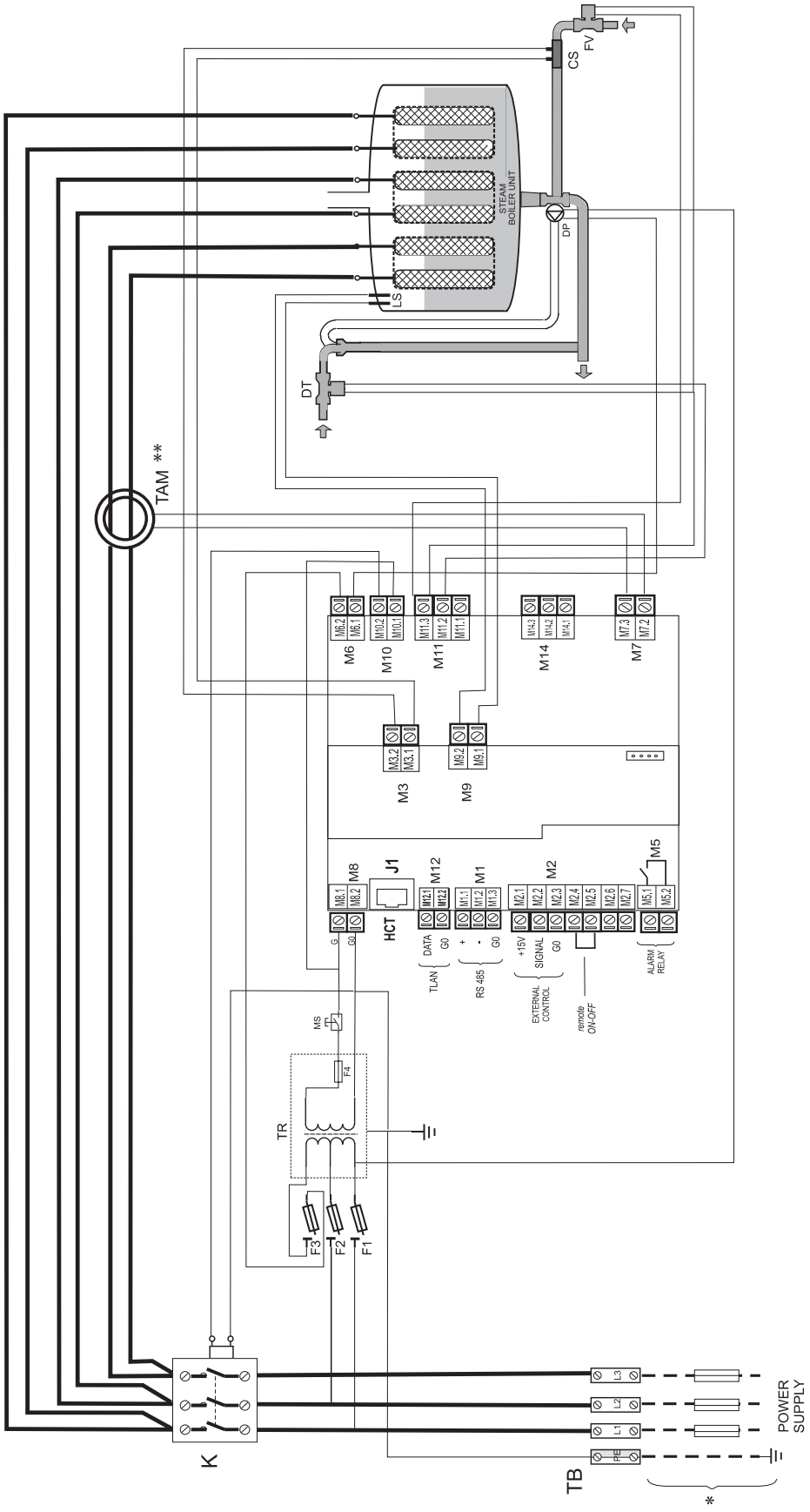

key:

TB	terminal block
K	contactor
F1-F2	primary fuses
F3	fuse protection drain pump
F4	secondary fuse
TR	transformer
MS	manual switch
FV	fill valve
DP	drain pump
LS	high level electrodes
CS	conductivity meter
TAM	external TAM
DT	valve drain tempering

Fig. 10.c

(**) Important: for the TAM configuration and connection see par. 11.1

10.4 Diagram of three-phase models UE045 (208-230 V) and UE065(460-575V)

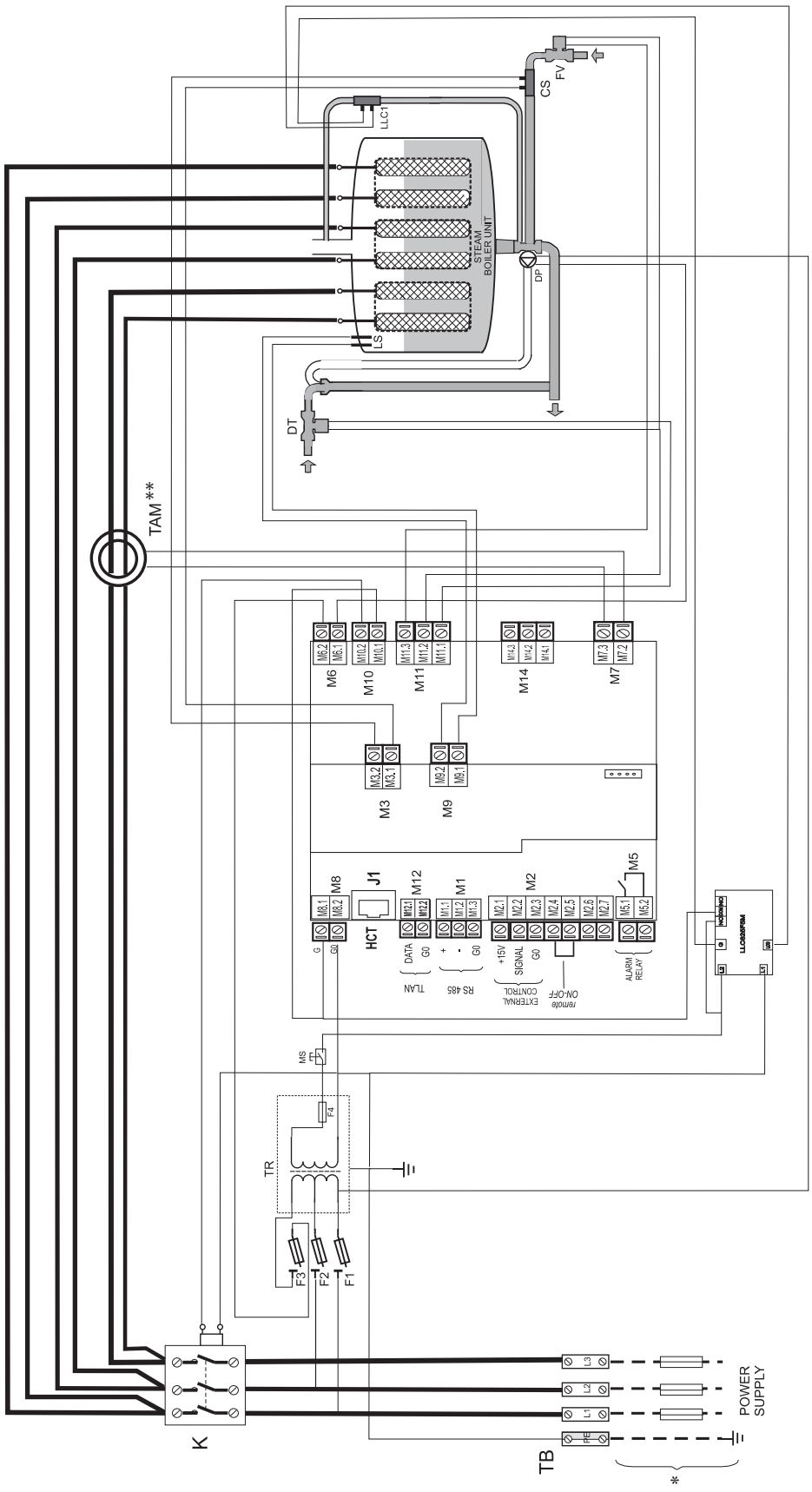

key:

TB	terminal block
K	contactor
F1-F2	primary fuses
F3	fuse protection drain pump
F4	secondary fuse
TR	transformer
MS	manual switch
FV	fill valve
DP	drain pump
LS	high level electrodes
CS	conductivity meter
TAM	external TAM
DT	valve drain tempering

Fig. 10.d

(**) Important: for the TAM configuration and connection see par. 11.1

11. GENERAL FEATURES AND MODELS

The following table lists the electrical data relating to the power supply of the various models and the specifications of each. Note that some models may be powered at different voltages, obviously with different power input and steam production.

			power supply			nominal specifications				
model	steam production [2; 4] (kg/h) (lbs/hr)	power[2] (kW)	code	voltages[1] (V - type)	current[2] (A)	TAM configuration[5]		cable[3] (mm^2) / (AWG)	recommended External fuses sizes[3] (A / type)	wiring diagram (Fig.)
UE001	1,5 / 3.3	1,1	U	208 - 1~	5,4	13.a	100	1,5 / 16	10 A /fast blow	10.a
			D	230 - 1~	4,9	13.a	100	1,5 / 16	10 A / fast blow	10.a
UE003	3,0 / 6.6	2,2	U	208 - 1~	10,8	13.d	300	2,5/14	16 A / fast blow	10.a
			D	230 - 1~	9,8	13.d	300	2,5/14	16 A / fast blow	10.a
			W	208 - 3~	6,2	13.a	100	1,5 / 16	10 A / fast blow	10.b
			K	230 - 3~	5,6	13.a	100	2,5/14	16 A / fast blow	10.b
			M	460 - 3~	2,8	13.d	100	1,5 / 16	10 A / fast blow	10.b
UE005	5,0 / 11.0	3,7	U	208 - 1~	18,0	13.e	300	6/10	32 A / fast blow	10.a
			D	230 – 1~	16,3	13.e	300	6/10	32 A / fast blow	10.a
			W	208 - 3~	10,4	13.c	300	2,5/14	16 A / fast blow	10.b
			K	230 - 3~	9,4	13.c	300	2,5/14	16 A / fast blow	10.b
			M	460 - 3~	4,7	13.a	100	1,5 / 16	10 A / fast blow	10.b
			N	575 - 3~	3,8	13.a	100	1,5 / 16	10 A / fast blow	10.b
UE008	8,0 / 17.6	6,0	W	208 - 3~	16,7	13.c	300	6/10	32 A / fast blow	10.b
			K	230 – 3~	15,1	13.c	300	6/10	32 A / fast blow	10.b
			M	460 - 3~	7,5	13.a	100	2,5/14	16 A / fast blow	10.b
			N	575 – 3~	6,0	13.a	100	2,5/14	16 A / fast blow	10.b
UE009	9,0 / 19.8	6,7	U	208 - 1~	31,37	13.a	500	16/6	50A / fast blow	10.a
			D	230 - 1~	29,3	13.a	500	10/8	40 A / fast blow	10.a
UE010	10,0 / 22.0	7,5	W	208 - 3~	18,8	13.c	300	6/10	32 A / fast blow	10.a
			K	230 – 3~	10,8	13.c	300	2,5/14	16 A / fast blow	10.b
			M	460 - 3~	9,4	13.a	100	2,5/14	16 A / fast blow	10.b
			N	575 – 3~	7,5	13.d	300	2,5/14	16 A / fast blow	10.b
UE015	15,0 / 33.0	11,2	W	208 - 3~	31,2	13.c	500	10/8	40 A / fast blow	10.b
			K	230 – 3~	28,2	13.c	500	16 / 0	32 A / fast blow	10.b
			M	460 - 3~	14,1	13.a	300	10/8	20 A / fast blow	10.b
			N	575 – 3~	11,3	13.a	300	4 / 10	16 A / fast blow	10.b
UE018	18 / 39.7	13,5	M	460 - 3~	16,9	13.a	500	6 / 10	32 A / fast blow	10.b
			N	575 – 3~	13,57	13.a	500	6 / 10	32 A / fast blow	10.b
UE025	25 / 55.1	18,7	W	208 - 3~	52,0	13.b	500	25 / 3	80 A / fast blow	10.c
			K	230 – 3~	47,1	13.b	500	25 / 3	63 A / fast blow	10.c
			M	460 - 3~	23,5	13.c	500	10/8	32A / fast blow	10.c
			N	575 – 3~	18,8	13.c	500	6/10	25A / fast blow	10.c
UE035	35 / 77.2	26,2	W	208 - 3~	72,9	13.c	700	35 / 4	100 A / fast blow	10.c
			K	230 – 3~	65,9	13.c	700	35 / 4	100 A / fast blow	10.c
			M	460 - 3~	32,9	13.c	500	16 / 6	50 A / fast blow	10.c
			N	575 – 3~	26,4	13.c	500	10/8	40 A / fast blow	10.c
UE045	45 / 99.2	33,7	W	208 - 3~	93,68	13.b	700	70 / 2	125 A / fast blow	10.d
			K	230 – 3~	84,72	13.b	700	70 / 2	125 A / fast blow	10.d
			M	460 - 3~	42,4	13.c	700	16 / 6	60 A / fast blow	10.c
			N	575 – 3~	33,9	13.c	700	16 / 6	50 A / fast blow	10.c
UE065	65 / 143.3	48,7	M	460 - 3~	61,19	13.b	700	35 / 4	100 A / fast blow	10.d
			N	575 – 3~	48,95	13.b	700	35 / 4	80 A / fast blow	10.d

Tab. 11.a

(1) tolerance allowed on the rated mains voltage: -15%, +10%;

(2) tolerance on the rated values: +5%, -10% (EN 60335-1);

(3) recommended values refer to laying PVC or rubber cables in closed conduits, 20 m (65.6 feet) long; use the local standards, or whichever is more restrictive,

(4) rated max instant steam production: the average steam production may be affected by external factors, such as: ambient temperature, water quality, steam distribution system;

(5) refer to the wiring diagrams to verify

the data are not absolute and if these differ from local standards, the latter must prevail.

TAM configurations and connections (transformer for measuring the current)

Important: the configurations and connections are already made by CAREL, and no changes are required. The following diagrams represent possible connection modes and may be useful in the event of serious electrical malfunctions on the humidifier.
All operations must only be performed by qualified personnel, improper use may cause serious damage.

one cable turn



Fig. 11.a

one turn of the two cables of the same phase

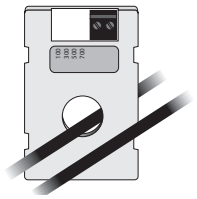

Fig. 11.b

two cable turns of the same phase



Fig.11.c

one cable in "double turn" mode

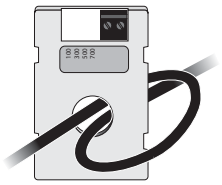

Fig.11.d

three cable turns of the same phase

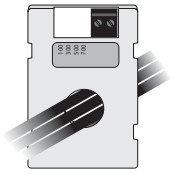

Fig.11.e

Important: to avoid interference, separate the power cables from the probe cables.

11.2 Technical specifications

technical specifications		UEY models													
		UE001*	UE003*	UE003**	UE005*	UE005**	UE008**	UE009*	UE010**	UE015**	UE018**	UE025**	UE035**	UE045**	UE065**
steam															
connection dia. mm (in)	208-230 V	22/30 (0.9/1.2)			30 (1.2)							1x40 (1x1.6)		2x40 (2x1.6)	--
	460 -575V	22/30 (0.9/1.2)			30 (1.2)							1x40 (1x1.6)			4x40 (2x1.6)
outlet pressure limits Pa (PSI) (" W.C.)		0/1500 (0/0.218) (6.0)			0/1300 (0/0.188) (5.2)			0/1350 (0/0.196) (5.4)				0/2000 (0/0.290) (8.0)			
supply water															
connection		3/4" G													
temperature limits °C (°F)		1 to 40 (33.8 to 104)													
pressure limits (MPa) (PSI)		0.1 to 0.8 (1 to 8 bar) (14.5 to 116.0)													
hardness limits (°fH)		≤ 40													
instant flow-rate (l/min) (GPM)		0.6 (0.13)						1.1 (0.24)				5.85 (1.3) (7 (1.5) for UE045 to 230Vac)			7 (1.5)
conductivity range (µS/cm)		75 to 1250													
cdrain water															
connection dia. mm (in)		40 (1.6)										50 (1.9)			
typical temperature °C (°F)		≤100 (212)													
Drain tempering temperature °C (°F)		≤ 60/ (140)													
instant flow-rate (l/min) (GPM)		7 (1.5)										22.5 (4.9)			
instant flow-rate of the drain tempering valve		12 (3.2)										30 (7.9)			
environmental conditions															
ambient operating temp. °C (°F)		1 to .40 (33.8 to .104)													
ambient operating humidity (% rH)		10 to 60													
storage temperature °C (°F)		-10 to 70 (14 to .158)													
storage humidity (% rH)		5 to 95													
index of protection		IP20													
electronic controller															
Y basic		UEY													
auxiliary voltage/frequency (V - Hz)		24 / 50/60													
maximum auxiliary power (VA)		90													
probe inputs (general features)		can be selected for the following signals: 0 to 10 Vdc, 2 to 10 Vdc, 0 to 20 mA, 4 to 20 mA input impedence: 20 kΩ with: 0 to 10 Vdc, 2 to 10 Vdc signals 100 Ω with: 0 to 20 mA, 4 to 20 mA signals													
active probe power supply (general features)		15 Vdc. 100 mA. protected against short-circuits +1 Vdc with 135 Ω load													
alarm relay outputs(general features)		250 V 5 A (2 A) - type of action-microswitching 1C													
remote enable input (general features)		cvoltage-free contact; max. resistance 100 Ω; Vmax= 5 Vdc; Imax= 5 mA													
output															
instant steam production[1] kg/h (lb/h)		1.5 (3.3)	3.0 (6.6)	3.0 (6.6)	5.0 (11)	5.0 (11)	8.0 (17.6)	9.0 (19.8)	10.0 (22)	15.0 (33)	18.0 (39.7)	25 (55.1)	35 (77.2)	45 (99.2)	65 (143.3)
power input at rated voltage (kW)		1.12	2.25	2.5	3.75	3.75	6.0	6.75	7.5	11.25	13.5	18.75	26.25	33.75	48.75

Tab. 11.b

* single-phase, ** three-phase.

[1]= the average steam production is affected by factors such as: ambient temperature, water quality, steam distribution system

11.3 Models of steam hoses

		UEY models											
	code	UE001Y	UE003Y	UE005Y	UE008Y	UE009Y	UE010Y	UE015Y	UE018Y	UE025Y	UE035Y	UE045Y	UE065Y
	steam outlet dia. mm (in)	22 (0.9")	22 (0.9")	30 (1.2")	30 (1.2")	30 (1.2")	30 (1.2")	30 (1.2")	30 (1.2")	40 (1.6")	40 (1.6")	40 (1.6")	2x40 (2x1.6")
	max. capacity kg/h (lb/h)	1/1.5 (2.2/3.3)	3 (6.6)	5 (11)	8 (17.6)	9 (19.8)	10 (22)	15 (33)	18 (39.7)	25 (55.1)	35 (77.2)	45 (99.2)	65 (143.3)
CAREL steam hoses													
code	ID mm (")												
SHOSE00022	22 (0.9")	√	√	-	-	-	-	-	-	-	-	-	-
SHOSE00030	30 (1.2")	-	-	√	√	√	√	√	√	-	-	-	-
SHOSE00040	40 (1.6")	-	-	-	-	-	-	-	-	√	√	√	√

Tab. 11.c

11.4 Models of concentrated jet steam distributors

			UEY models												
		code	UE001Y	UE003Y	UE005Y	UE008Y	UE009Y	UE010Y	UE015Y	UE018Y	UE025Y	UE035Y	UE045Y	UE045Y (230V)	UE065Y
		Ø steam outlet mm (in)	22 (0.9")	22 (0.9")	30 (1.2")	30 (1.2")	30 (1.2")	30 (1.2")	30 (1.2")	30 (1.2")	40 (1.6")	40 (1.6")	40 (1.6")	2x40 (2x1.6")	2x40 (2x1.6")
		max. capacity kg/h (lb/h)	1/1.5 (2.2/3.3)	3 (6.6)	5 (11)	8 (17.6)	9 (19.8)	10 (22)	15 (33)	18 (39.7)	25 (55.1)	35 (77.2)	45 (99.2)	45 (99.2)	65 (143.3)
CAREL distributors jet concentrated															
code	Ø steam inlet mm (in)	max. capacity Kg/h (lb/h)													
SDPOEM0012	22 (0.9")	3 (6.6)	1	1	-	-	-	-	-	-	-	-	-	-	-
SDPOEM0022	30 (1.2")	18 (39.7)	1	1	1	1	1	1	1	1	-	-	-	-	-
SDPOEM0000	30 (1.6")	18 (39.7) con foro da 30mm(1.6")	1	1	1	1	1	1	1	1	(2)*	(2)*	(4)***	(4)**	(4)**

Tab. 11.d

1 = the humidifier is connected to just one distributor
(2) = the humidifier is connected to two distributors (using the "Y" kit: UEKY000000)
2 = the humidifier is fitted with two outlets and can be connected to two distributors
(4) = the humidifier is fitted with two outlets and can be connected to up to four distributors (using two "Y" kits)
* = use CAREL "Y" kit code UEKY000000 (40 mm/1.6" inlet and 2 x 30 mm/1.2" outlets)
** = use CAREL "Y" kit code UEKY000000 (40 mm/1.6" inlet and 2 x 30 mm/1.2" outlets)
*** = use one CAREL "Y" kit code UEKY40X400 (40 mm/1.6" inlet and 2 x 40 mm/1.6" outlets) and two CAREL "Y" kit code UEKY000000 (40 mm/1.6" inlet and 2 x 30 mm/1.2" outlets)

11.5 Models of linear distributors and typical installations

				UEY models												
			code	UE001Y	UE003Y	UE005Y	UE008Y	UE009Y	UE010Y	UE015Y	UE018Y	UE025Y	UE035Y	UE045Y	UE045Y (230V)	UE065Y
			Ø steam outlet mm (in)	22 (0.9")	22 (0.9")	30 (1.2")	30 (1.2")	30 (1.2")	30 (1.2")	30 (1.2")	30 (1.2")	40 (1.6")	40 (1.6")	40 (1.6")	2x40 (2x1.6")	2x40 (2x1.6")
			max. capacity kg/h (lb/h)	1/1.5 (2.2/3.3)	3 (6.6)	5 (11)	8 (17.6)	9 (19.8)	10 (22)	15 (33)	18 (39.7)	25 (55.1)	35 (77.2)	45 (99.2)	45 (99.2)	65 (143.3)
CAREL DP linear distributors																
cod.	Ø isteam inlet mm (in)	max. capacity Kg/h (lb/h)	length mm (in)													
DP035D22R0	22 (0.9")	4 (8.8)	332 (13.1)	1	1	-	-	-	-	-	-	-	-	-	-	-
DP045D22R0	22 (0.9")	6 (13.2)	438 (17.2)	1	1	-	-	-	-	-	-	-	-	-	-	-
DP060D22R0	22 (0.9")	9 (19.8)	597 (23.5)	1	1	-	-	-	-	-	-	-	-	-	-	-
DP085D22R0	22 (0.9")	9 (19.8)	835 (32.9)	1	1	-	-	-	-	-	-	-	-	-	-	-
DP035D30R0	30 (1.2")	5 (11)	343 (13.5)	-	-	1	-	-	-	-	-	-	-	-	-	-
DP045D30R0	30 (1.2")	8 (17.6)	427 (16.8)	-	-	1	1	-	-	-	-	-	-	-	-	-
DP060D30R0	30 (1.2")	12 (26.5)	596 (23.5)	-	-	1	1	1	1	-	-	-	-	-	-	-
DP085D30R0	30 (1.2")	18 (39.7)	850 (33.5)	-	-	1	1	1	1	1	1	(2)*	(2)*	-	-	-
DP105D30R0	30 (1.2")	18 (39.7)	1048 (41.3)	-	-	1	1	1	1	1	1	(2)*	(2)*	-	-	-
DP125D30R0	30 (1.2")	18 (39.7)	1245 (49)	-	-	1	1	1	1	1	1	(2)*	(2)*	-	-	-
DP165D30R0	30 (1.2")	18 (39.7)	1636 (64.4)	-	-	-	-	-	1	1	1	(2)*	(2)*	-	-	-
DP085D40R0	40 (1.6")	25 (55.1)	834 (32.8)	-	-	-	-	-	-	-	-	1	(2)**	(2)**	2	(4)**
DP105D40R0	40 (1.6")	35 (77.2)	1015 (40)	-	-	-	-	-	-	-	-	1	1	(2)**	2	2
DP125D40R0	40 (1.6")	45 (99.2)	1022 (40.2)	-	-	-	-	-	-	-	-	1	1	1	1**	2
DP165D40R0	40 (1.6")	45 (99.2)	1636 (64.4)	-	-	-	-	-	-	-	-	-	1	1	1**	2
DP205D40R0	40 (1.6")	45 (99.2)	2025 (79.7)	-	-	-	-	-	-	-	-	-	1	1	1**	2

Tab. 11.e

1 = the humidifier is connected to just one distributor
(2) = the humidifier is connected to two distributors (using the "Y" kit: UEKY000000)
2 = the humidifier is fitted with two outlets and can be connected to two linear distributors
(4) = the humidifier is fitted with two outlets and can be connected to up to four linear distributors (using two "Y" kits)
* = use CAREL "Y" kit code UEKY000000 (40 mm/1.6" inlet and 2 x 30 mm/1.2" outlets)
** = use CAREL "Y" kit code UEKY40X400 (40 mm/1.6" inlet and 2 x 40 mm/1.6" outlets)
*** = use two CAREL "Y" kit code UEKY40X400 (40 mm/1.6" inlet and 2 x 40 mm/1.6" outlets)

For typical installations of the linear distributors, see Fig. 11.f on page40.

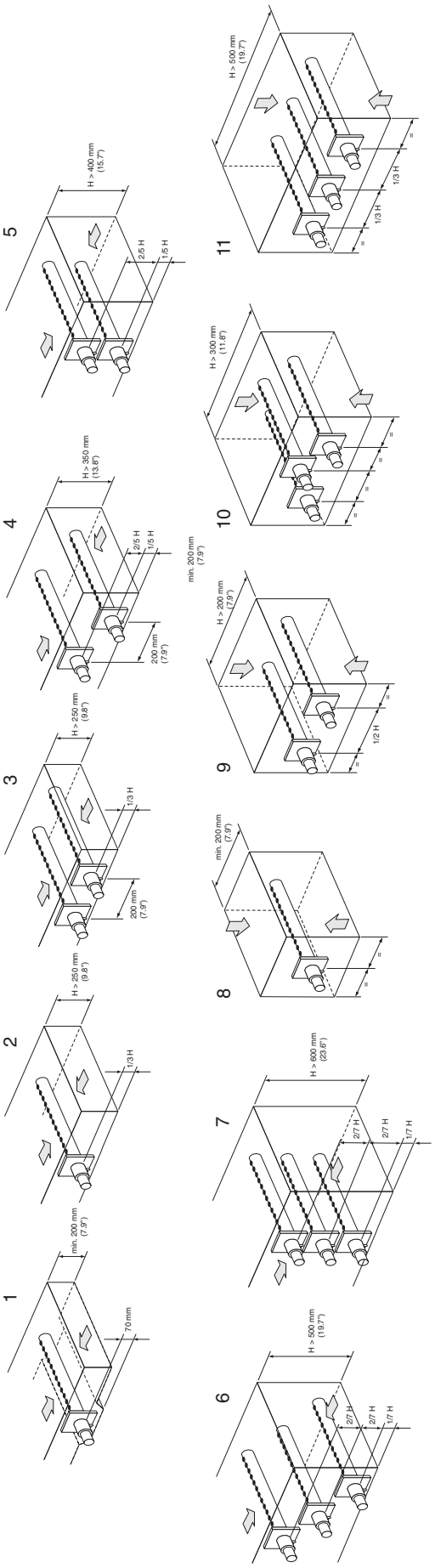
1
min. 200 mm (7.9")
10 mm
2
H > 250 mm (9.8")
1/3 H
3
H > 250 mm (9.8")
1/3 H
200 mm (7.9")
4
H > 350 mm (13.8")
2/5 H
1/5 H
200 mm (7.9")
5
H > 400 mm (15.7")
2/5 H
1/5 H
6
H > 500 mm (19.7")
2/7 H
2/7 H
1/7 H
7
H > 600 mm (23.6")
2/7 H
2/7 H
1/7 H
8
min. 200 mm (7.9")
9
H > 200 mm (7.9")
1/2 H
min. 200 mm (7.9")
10
H > 300 mm (11.8")
11
H > 500 mm (19.7")
1/3 H
1/3 H

11.6 Table of parameter b1

b1	Alarm relay oscillation when "CY" alarm is on	Dilution drain with contactor	Drain if new request ≤ 2/3 current request (contact open)	Total drain due to inactivity	Display of "CL" & "CP" alarms	Alarm relay activated if...	Periodical total drain	Enable management of steam request signal /external fan control relay M14
DEF. 0	OFF	open	YES	ON, depending on bF	ON	alarms in progress	OFF	Disabled
1	ON	open	YES	ON, depending on bF	ON	alarms in progress	OFF	Disabled
2	OFF	closed	YES	ON, depending on bF	ON	alarms in progress	OFF	Disabled
3	ON	closed	YES	ON, depending on bF	ON	alarms in progress	OFF	Disabled
4	OFF	open	NO	ON, depending on bF	ON	alarms in progress	OFF	Disabled
5	ON	open	NO	ON, depending on bF	ON	alarms in progress	OFF	Disabled
6	OFF	closed	NO	ON, depending on bF	ON	alarms in progress	OFF	Disabled
7	ON	closed	NO	ON, depending on bF	ON	alarms in progress	OFF	Disabled
8	OFF	open	YES	OFF	ON	alarms in progress	OFF	Disabled
9	ON	open	YES	OFF	ON	alarms in progress	OFF	Disabled
10	OFF	closed	YES	OFF	ON	alarms in progress	OFF	Disabled
11	ON	closed	YES	OFF	ON	alarms in progress	OFF	Disabled
12	OFF	open	NO	OFF	ON	alarms in progress	OFF	Disabled
13	ON	open	NO	OFF	ON	alarms in progress	OFF	Disabled
14	OFF	closed	NO	OFF	ON	alarms in progress	OFF	Disabled
15	ON	closed	NO	OFF	ON	alarms in progress	OFF	Disabled
16	OFF	open	YES	ON, depending on bF	OFF	alarms in progress	OFF	Disabled
17	ON	open	YES	ON, depending on bF	OFF	alarms in progress	OFF	Disabled
18	OFF	closed	YES	ON, depending on bF	OFF	alarms in progress	OFF	Disabled
19	ON	closed	YES	ON, depending on bF	OFF	alarms in progress	OFF	Disabled
20	OFF	open	NO	ON, depending on bF	OFF	alarms in progress	OFF	Disabled
21	ON	open	NO	ON, depending on bF	OFF	alarms in progress	OFF	Disabled
22	OFF	closed	NO	ON, depending on bF	OFF	alarms in progress	OFF	Disabled
23	ON	closed	NO	ON, depending on bF	OFF	alarms in progress	OFF	Disabled
24	OFF	open	YES	OFF	OFF	alarms in progress	OFF	Disabled
25	ON	open	YES	OFF	OFF	alarms in progress	OFF	Disabled
26	OFF	closed	YES	OFF	OFF	alarms in progress	OFF	Disabled
27	ON	closed	YES	OFF	OFF	alarms in progress	OFF	Disabled
28	OFF	open	NO	OFF	OFF	alarms in progress	OFF	Disabled
29	ON	open	NO	OFF	OFF	alarms in progress	OFF	Disabled
30	OFF	closed	NO	OFF	OFF	alarms in progress	OFF	Disabled
31	ON	closed	NO	OFF	OFF	alarms in progress	OFF	Disabled
32	OFF	open	YES	ON, depending on bF	ON	no alarms in progress	OFF	Disabled
33	ON	open	YES	ON, depending on bF	ON	no alarms in progress	OFF	Disabled
34	OFF	closed	YES	ON, depending on bF	ON	no alarms in progress	OFF	Disabled
35	ON	closed	YES	ON, depending on bF	ON	no alarms in progress	OFF	Disabled
36	OFF	open	NO	ON, depending on bF	ON	no alarms in progress	OFF	Disabled
37	ON	open	NO	ON, depending on bF	ON	no alarms in progress	OFF	Disabled
38	OFF	closed	NO	ON, depending on bF	ON	no alarms in progress	OFF	Disabled
39	ON	closed	NO	ON, depending on bF	ON	no alarms in progress	OFF	Disabled
40	OFF	open	YES	OFF	ON	no alarms in progress	OFF	Disabled
41	ON	open	YES	OFF	ON	no alarms in progress	OFF	Disabled
42	OFF	closed	YES	OFF	ON	no alarms in progress	OFF	Disabled
43	ON	closed	YES	OFF	ON	no alarms in progress	OFF	Disabled
44	OFF	open	NO	OFF	ON	no alarms in progress	OFF	Disabled
45	ON	open	NO	OFF	ON	no alarms in progress	OFF	Disabled
46	OFF	closed	NO	OFF	ON	no alarms in progress	OFF	Disabled
47	ON	closed	NO	OFF	ON	no alarms in progress	OFF	Disabled
48	OFF	open	YES	ON, depending on bF	OFF	no alarms in progress	OFF	Disabled
49	ON	open	YES	ON, depending on bF	OFF	no alarms in progress	OFF	Disabled
50	OFF	closed	YES	ON, depending on bF	OFF	no alarms in progress	OFF	Disabled
51	ON	closed	YES	ON, depending on bF	OFF	no alarms in progress	OFF	Disabled
52	OFF	open	NO	ON, depending on bF	OFF	no alarms in progress	OFF	Disabled
53	ON	open	NO	ON, depending on bF	OFF	no alarms in progress	OFF	Disabled
54	OFF	closed	NO	ON, depending on bF	OFF	no alarms in progress	OFF	Disabled
55	ON	closed	NO	ON, depending on bF	OFF	no alarms in progress	OFF	Disabled
56	OFF	open	YES	OFF	OFF	no alarms in progress	OFF	Disabled
57	ON	open	YES	OFF	OFF	no alarms in progress	OFF	Disabled
58	OFF	closed	YES	OFF	OFF	no alarms in progress	OFF	Disabled
59	ON	closed	YES	OFF	OFF	no alarms in progress	OFF	Disabled
60	OFF	open	NO	OFF	OFF	no alarms in progress	OFF	Disabled
61	ON	open	NO	OFF	OFF	no alarms in progress	OFF	Disabled
62	OFF	closed	NO	OFF	OFF	no alarms in progress	OFF	Disabled

b1	Alarm relay oscillation when "CY" alarm is on	Dilution drain with contactor	Drain if new request ≤ 2/3 current request (contact open))	Total drain due to inactivity	Display of "CL" & "CP" alarms	Alarm relay activated if...	Periodical total drai	Enable management of steam request signal /external fan control relay M14
63	ON	closed	NO	OFF	OFF	no alarms in progress	OFF	Disabled
64	OFF	open	YES	ON, depending on bF	ON	alarms in progress	ON, depending on bE	Disabled
65	ON	open	YES	ON, depending on bF	ON	alarms in progress	ON, depending on bE	Disabled
66	OFF	closed	YES	ON, depending on bF	ON	alarms in progress	ON, depending on bE	Disabled
67	ON	closed	YES	ON, depending on bF	ON	alarms in progress	ON, depending on bE	Disabled
68	OFF	open	NO	ON, depending on bF	ON	alarms in progress	ON, depending on bE	Disabled
69	ON	open	NO	ON, depending on bF	ON	alarms in progress	ON, depending on bE	Disabled
70	OFF	closed	NO	ON, depending on bF	ON	alarms in progress	ON, depending on bE	Disabled
71	ON	closed	NO	ON, depending on bF	ON	alarms in progress	ON, depending on bE	Disabled
72	OFF	open	YES	OFF	ON	alarms in progress	ON, depending on bE	Disabled
73	ON	open	YES	OFF	ON	alarms in progress	ON, depending on bE	Disabled
74	OFF	closed	YES	OFF	ON	alarms in progress	ON, depending on bE	Disabled
75	ON	closed	YES	OFF	ON	alarms in progress	ON, depending on bE	Disabled
76	OFF	open	NO	OFF	ON	alarms in progress	ON, depending on bE	Disabled
77	ON	open	NO	OFF	ON	alarms in progress	ON, depending on bE	Disabled
78	OFF	closed	NO	OFF	ON	alarms in progress	ON, depending on bE	Disabled
79	ON	closed	NO	OFF	ON	alarms in progress	ON, depending on bE	Disabled
80	OFF	open	YES	ON, depending on bF	OFF	alarms in progress	ON, depending on bE	Disabled
81	ON	open	YES	ON, depending on bF	OFF	alarms in progress	ON, depending on bE	Disabled
82	OFF	closed	YES	ON, depending on bF	OFF	alarms in progress	ON, depending on bE	Disabled
83	ON	closed	YES	ON, depending on bF	OFF	alarms in progress	ON, depending on bE	Disabled
84	OFF	open	NO	ON, depending on bF	OFF	alarms in progress	ON, depending on bE	Disabled
85	ON	open	NO	ON, depending on bF	OFF	alarms in progress	ON, depending on bE	Disabled
86	OFF	closed	NO	ON, depending on bF	OFF	alarms in progress	ON, depending on bE	Disabled
87	ON	closed	NO	ON, depending on bF	OFF	alarms in progress	ON, depending on bE	Disabled
88	OFF	open	YES	OFF	OFF	alarms in progress	ON, depending on bE	Disabled
89	ON	open	YES	OFF	OFF	alarms in progress	ON, depending on bE	Disabled
90	OFF	closed	YES	OFF	OFF	alarms in progress	ON, depending on bE	Disabled
91	ON	closed	YES	OFF	OFF	alarms in progress	ON, depending on bE	Disabled
92	OFF	open	NO	OFF	OFF	alarms in progress	ON, depending on bE	Disabled
93	ON	open	NO	OFF	OFF	alarms in progress	ON, depending on bE	Disabled
94	OFF	closed	NO	OFF	OFF	alarms in progress	ON, depending on bE	Disabled
95	ON	closed	NO	OFF	OFF	alarms in progress	ON, depending on bE	Disabled
96	OFF	open	YES	ON, depending on bF	ON	no alarms in progress	ON, depending on bE	Disabled
97	ON	open	YES	ON, depending on bF	ON	no alarms in progress	ON, depending on bE	Disabled
98	OFF	closed	YES	ON, depending on bF	ON	no alarms in progress	ON, depending on bE	Disabled
99	ON	closed	YES	ON, depending on bF	ON	no alarms in progress	ON, depending on bE	Disabled
100	OFF	open	NO	ON, depending on bF	ON	no alarms in progress	ON, depending on bE	Disabled
101	ON	open	NO	ON, depending on bF	ON	no alarms in progress	ON, depending on bE	Disabled
102	OFF	closed	NO	ON, depending on bF	ON	no alarms in progress	ON, depending on bE	Disabled
103	ON	closed	NO	ON, depending on bF	ON	no alarms in progress	ON, depending on bE	Disabled
104	OFF	open	YES	OFF	ON	no alarms in progress	ON, depending on bE	Disabled
105	ON	open	YES	OFF	ON	no alarms in progress	ON, depending on bE	Disabled
106	OFF	closed	YES	OFF	ON	no alarms in progress	ON, depending on bE	Disabled
107	ON	closed	YES	OFF	ON	no alarms in progress	ON, depending on bE	Disabled
108	OFF	open	NO	OFF	ON	no alarms in progress	ON, depending on bE	Disabled
109	ON	open	NO	OFF	ON	no alarms in progress	ON, depending on bE	Disabled
110	OFF	closed	NO	OFF	ON	no alarms in progress	ON, depending on bE	Disabled
111	ON	closed	NO	OFF	ON	no alarms in progress	ON, depending on bE	Disabled
112	OFF	open	YES	ON, depending on bF	OFF	no alarms in progress	ON, depending on bE	Disabled
113	ON	open	YES	ON, depending on bF	OFF	no alarms in progress	ON, depending on bE	Disabled
114	OFF	closed	YES	ON, depending on bF	OFF	no alarms in progress	ON, depending on bE	Disabled
115	ON	closed	YES	ON, depending on bF	OFF	no alarms in progress	ON, depending on bE	Disabled
116	OFF	open	NO	ON, depending on bF	OFF	no alarms in progress	ON, depending on bE	Disabled
117	ON	open	NO	ON, depending on bF	OFF	no alarms in progress	ON, depending on bE	Disabled
118	OFF	closed	NO	ON, depending on bF	OFF	no alarms in progress	ON, depending on bE	Disabled
119	ON	closed	NO	ON, depending on bF	OFF	no alarms in progress	ON, depending on bE	Disabled
120	OFF	open	YES	OFF	OFF	no alarms in progress	ON, depending on bE	Disabled
121	ON	open	YES	OFF	OFF	no alarms in progress	ON, depending on bE	Disabled
122	OFF	closed	YES	OFF	OFF	no alarms in progress	ON, depending on bE	Disabled
123	ON	closed	YES	OFF	OFF	no alarms in progress	ON, depending on bE	Disabled
124	OFF	open	NO	OFF	OFF	no alarms in progress	ON, depending on bE	Disabled
125	ON	open	NO	OFF	OFF	no alarms in progress	ON, depending on bE	Disabled
126	OFF	closed	NO	OFF	OFF	no alarms in progress	ON, depending on bE	Disabled
127	ON	closed	NO	OFF	OFF	no alarms in progress	ON, depending on bE	Disabled

Tab. 11.f

11.6 Table of parameter b1

b1	Alarm relay oscillation when "CY" alarm is on	Dilution drain with contactor	Drain if new request ≤ 2/3 current request (contact open)	Total drain due to inactivity	Display of "CL" & "CP" alarms	Alarm relay activated if...	Periodical total drain	Enable management of steam request signal /external fan control relay M14
128	OFF	open	YES	ON, depending on bF	ON	alarms in progress	OFF	Enabled
129	ON	open	YES	ON, depending on bF	ON	alarms in progress	OFF	Enabled
130	OFF	closed	YES	ON, depending on bF	ON	alarms in progress	OFF	Enabled
131	ON	closed	YES	ON, depending on bF	ON	alarms in progress	OFF	Enabled
132	OFF	open	NO	ON, depending on bF	ON	alarms in progress	OFF	Enabled
133	ON	open	NO	ON, depending on bF	ON	alarms in progress	OFF	Enabled
134	OFF	closed	NO	ON, depending on bF	ON	alarms in progress	OFF	Enabled
135	ON	closed	NO	ON, depending on bF	ON	alarms in progress	OFF	Enabled
136	OFF	open	YES	OFF	ON	alarms in progress	OFF	Enabled
137	ON	open	YES	OFF	ON	alarms in progress	OFF	Enabled
138	OFF	closed	YES	OFF	ON	alarms in progress	OFF	Enabled
139	ON	closed	YES	OFF	ON	alarms in progress	OFF	Enabled
140	OFF	open	NO	OFF	ON	alarms in progress	OFF	Enabled
141	ON	open	NO	OFF	ON	alarms in progress	OFF	Enabled
142	OFF	closed	NO	OFF	ON	alarms in progress	OFF	Enabled
143	ON	closed	NO	OFF	ON	alarms in progress	OFF	Enabled
144	OFF	open	YES	ON, depending on bF	OFF	alarms in progress	OFF	Enabled
145	ON	open	YES	ON, depending on bF	OFF	alarms in progress	OFF	Enabled
146	OFF	closed	YES	ON, depending on bF	OFF	alarms in progress	OFF	Enabled
147	ON	closed	YES	ON, depending on bF	OFF	alarms in progress	OFF	Enabled
148	OFF	open	NO	ON, depending on bF	OFF	alarms in progress	OFF	Enabled
149	ON	open	NO	ON, depending on bF	OFF	alarms in progress	OFF	Enabled
150	OFF	closed	NO	ON, depending on bF	OFF	alarms in progress	OFF	Enabled
151	ON	closed	NO	ON, depending on bF	OFF	alarms in progress	OFF	Enabled
152	OFF	open	YES	OFF	OFF	alarms in progress	OFF	Enabled
153	ON	open	YES	OFF	OFF	alarms in progress	OFF	Enabled
154	OFF	closed	YES	OFF	OFF	alarms in progress	OFF	Enabled
155	ON	closed	YES	OFF	OFF	alarms in progress	OFF	Enabled
156	OFF	open	NO	OFF	OFF	alarms in progress	OFF	Enabled
157	ON	open	NO	OFF	OFF	alarms in progress	OFF	Enabled
158	OFF	closed	NO	OFF	OFF	alarms in progress	OFF	Enabled
159	ON	closed	NO	OFF	OFF	alarms in progress	OFF	Enabled
160	OFF	open	YES	ON, depending on bF	ON	no alarms in progress	OFF	Enabled
161	ON	open	YES	ON, depending on bF	ON	no alarms in progress	OFF	Enabled
162	OFF	closed	YES	ON, depending on bF	ON	no alarms in progress	OFF	Enabled
163	ON	closed	YES	ON, depending on bF	ON	no alarms in progress	OFF	Enabled
164	OFF	open	NO	ON, depending on bF	ON	no alarms in progress	OFF	Enabled
165	ON	open	NO	ON, depending on bF	ON	no alarms in progress	OFF	Enabled
166	OFF	closed	NO	ON, depending on bF	ON	no alarms in progress	OFF	Enabled
167	ON	closed	NO	ON, depending on bF	ON	no alarms in progress	OFF	Enabled
168	OFF	open	YES	OFF	ON	no alarms in progress	OFF	Enabled
169	ON	open	YES	OFF	ON	no alarms in progress	OFF	Enabled
170	OFF	closed	YES	OFF	ON	no alarms in progress	OFF	Enabled
171	ON	closed	YES	OFF	ON	no alarms in progress	OFF	Enabled
172	OFF	open	NO	OFF	ON	no alarms in progress	OFF	Enabled
173	ON	open	NO	OFF	ON	no alarms in progress	OFF	Enabled
174	OFF	closed	NO	OFF	ON	no alarms in progress	OFF	Enabled
175	ON	closed	NO	OFF	ON	no alarms in progress	OFF	Enabled
176	OFF	open	YES	ON, depending on bF	OFF	no alarms in progress	OFF	Enabled
177	ON	open	YES	ON, depending on bF	OFF	no alarms in progress	OFF	Enabled
178	OFF	closed	YES	ON, depending on bF	OFF	no alarms in progress	OFF	Enabled
179	ON	closed	YES	ON, depending on bF	OFF	no alarms in progress	OFF	Enabled
180	OFF	open	NO	ON, depending on bF	OFF	no alarms in progress	OFF	Enabled
181	ON	open	NO	ON, depending on bF	OFF	no alarms in progress	OFF	Enabled
182	OFF	closed	NO	ON, depending on bF	OFF	no alarms in progress	OFF	Enabled
183	ON	closed	NO	ON, depending on bF	OFF	no alarms in progress	OFF	Enabled
184	OFF	open	YES	OFF	OFF	no alarms in progress	OFF	Enabled
185	ON	open	YES	OFF	OFF	no alarms in progress	OFF	Enabled
186	OFF	closed	YES	OFF	OFF	no alarms in progress	OFF	Enabled
187	ON	closed	YES	OFF	OFF	no alarms in progress	OFF	Enabled
188	OFF	open	NO	OFF	OFF	no alarms in progress	OFF	Enabled
189	ON	open	NO	OFF	OFF	no alarms in progress	OFF	Enabled
190	OFF	closed	NO	OFF	OFF	no alarms in progress	OFF	Enabled

b1	Alarm relay oscillation when "CY" alarm is on	Dilution drain with contactor	Drain if new request ≤ 2/3 current request (contact open))	Total drain due to inactivity	Display of "CL" & "CP" alarms	Alarm relay activated if...	Periodical total drai	Enable management of steam request signal /external fan control relay M14
191	ON	closed	NO	OFF	OFF	no alarms in progress	OFF	Enabled
192	OFF	open	YES	ON, depending on bF	ON	alarms in progress	ON, depending on bE	Enabled
193	ON	open	YES	ON, depending on bF	ON	alarms in progress	ON, depending on bE	Enabled
194	OFF	closed	YES	ON, depending on bF	ON	alarms in progress	ON, depending on bE	Enabled
195	ON	closed	YES	ON, depending on bF	ON	alarms in progress	ON, depending on bE	Enabled
196	OFF	open	NO	ON, depending on bF	ON	alarms in progress	ON, depending on bE	Enabled
197	ON	open	NO	ON, depending on bF	ON	alarms in progress	ON, depending on bE	Enabled
198	OFF	closed	NO	ON, depending on bF	ON	alarms in progress	ON, depending on bE	Enabled
199	ON	closed	NO	ON, depending on bF	ON	alarms in progress	ON, depending on bE	Enabled
200	OFF	open	YES	OFF	ON	alarms in progress	ON, depending on bE	Enabled
201	ON	open	YES	OFF	ON	alarms in progress	ON, depending on bE	Enabled
202	OFF	closed	YES	OFF	ON	alarms in progress	ON, depending on bE	Enabled
203	ON	closed	YES	OFF	ON	alarms in progress	ON, depending on bE	Enabled
204	OFF	open	NO	OFF	ON	alarms in progress	ON, depending on bE	Enabled
205	ON	open	NO	OFF	ON	alarms in progress	ON, depending on bE	Enabled
206	OFF	closed	NO	OFF	ON	alarms in progress	ON, depending on bE	Enabled
207	ON	closed	NO	OFF	ON	alarms in progress	ON, depending on bE	Enabled
208	OFF	open	YES	ON, depending on bF	OFF	alarms in progress	ON, depending on bE	Enabled
209	ON	open	YES	ON, depending on bF	OFF	alarms in progress	ON, depending on bE	Enabled
210	OFF	closed	YES	ON, depending on bF	OFF	alarms in progress	ON, depending on bE	Enabled
211	ON	closed	YES	ON, depending on bF	OFF	alarms in progress	ON, depending on bE	Enabled
212	OFF	open	NO	ON, depending on bF	OFF	alarms in progress	ON, depending on bE	Enabled
213	ON	open	NO	ON, depending on bF	OFF	alarms in progress	ON, depending on bE	Enabled
214	OFF	closed	NO	ON, depending on bF	OFF	alarms in progress	ON, depending on bE	Enabled
215	ON	closed	NO	ON, depending on bF	OFF	alarms in progress	ON, depending on bE	Enabled
216	OFF	open	YES	OFF	OFF	alarms in progress	ON, depending on bE	Enabled
217	ON	open	YES	OFF	OFF	alarms in progress	ON, depending on bE	Enabled
218	OFF	closed	YES	OFF	OFF	alarms in progress	ON, depending on bE	Enabled
219	ON	closed	YES	OFF	OFF	alarms in progress	ON, depending on bE	Enabled
220	OFF	open	NO	OFF	OFF	alarms in progress	ON, depending on bE	Enabled
221	ON	open	NO	OFF	OFF	alarms in progress	ON, depending on bE	Enabled
222	OFF	closed	NO	OFF	OFF	alarms in progress	ON, depending on bE	Enabled
223	ON	closed	NO	OFF	OFF	alarms in progress	ON, depending on bE	Enabled
224	OFF	open	YES	ON, depending on bF	ON	no alarms in progress	ON, depending on bE	Enabled
225	ON	open	YES	ON, depending on bF	ON	no alarms in progress	ON, depending on bE	Enabled
226	OFF	closed	YES	ON, depending on bF	ON	no alarms in progress	ON, depending on bE	Enabled
227	ON	closed	YES	ON, depending on bF	ON	no alarms in progress	ON, depending on bE	Enabled
228	OFF	open	NO	ON, depending on bF	ON	no alarms in progress	ON, depending on bE	Enabled
229	ON	open	NO	ON, depending on bF	ON	no alarms in progress	ON, depending on bE	Enabled
230	OFF	closed	NO	ON, depending on bF	ON	no alarms in progress	ON, depending on bE	Enabled
231	ON	closed	NO	ON, depending on bF	ON	no alarms in progress	ON, depending on bE	Enabled
232	OFF	open	YES	OFF	ON	no alarms in progress	ON, depending on bE	Enabled
233	ON	open	YES	OFF	ON	no alarms in progress	ON, depending on bE	Enabled
234	OFF	closed	YES	OFF	ON	no alarms in progress	ON, depending on bE	Enabled
235	ON	closed	YES	OFF	ON	no alarms in progress	ON, depending on bE	Enabled
236	OFF	open	NO	OFF	ON	no alarms in progress	ON, depending on bE	Enabled
237	ON	open	NO	OFF	ON	no alarms in progress	ON, depending on bE	Enabled
238	OFF	closed	NO	OFF	ON	no alarms in progress	ON, depending on bE	Enabled
239	ON	closed	NO	OFF	ON	no alarms in progress	ON, depending on bE	Enabled
240	OFF	open	YES	ON, depending on bF	OFF	no alarms in progress	ON, depending on bE	Enabled
241	ON	open	YES	ON, depending on bF	OFF	no alarms in progress	ON, depending on bE	Enabled
242	OFF	closed	YES	ON, depending on bF	OFF	no alarms in progress	ON, depending on bE	Enabled
243	ON	closed	YES	ON, depending on bF	OFF	no alarms in progress	ON, depending on bE	Enabled
244	OFF	open	NO	ON, depending on bF	OFF	no alarms in progress	ON, depending on bE	Enabled
245	ON	open	NO	ON, depending on bF	OFF	no alarms in progress	ON, depending on bE	Enabled
246	OFF	closed	NO	ON, depending on bF	OFF	no alarms in progress	ON, depending on bE	Enabled
247	ON	closed	NO	ON, depending on bF	OFF	no alarms in progress	ON, depending on bE	Enabled
248	OFF	open	YES	OFF	OFF	no alarms in progress	ON, depending on bE	Enabled
249	ON	open	YES	OFF	OFF	no alarms in progress	ON, depending on bE	Enabled
250	OFF	closed	YES	OFF	OFF	no alarms in progress	ON, depending on bE	Enabled
251	ON	closed	YES	OFF	OFF	no alarms in progress	ON, depending on bE	Enabled
252	OFF	open	NO	OFF	OFF	no alarms in progress	ON, depending on bE	Enabled
253	ON	open	NO	OFF	OFF	no alarms in progress	ON, depending on bE	Enabled
254	OFF	closed	NO	OFF	OFF	no alarms in progress	ON, depending on bE	Enabled
255	ON	closed	NO	OFF	OFF	no alarms in progress	ON, depending on bE	Enabled

Tab. 11.f

11.7 CONTROLLING THE BOARD VIA NETWORK

The variables shown in the list are only some of the total variables available. DO NOT CONFIGURE VA-RIABLES THAT ARE NOT SHOWN IN THE TABLE, OTHERWISE THE OPERATION OF THE HUMIDIFIER MAY BE AFFECTED. NOTE:

The software release is made up of 4 digits and is shown on the sticker on the back of the controller. For example, the code "1.080" indicates: hardware release "1.0" and software release "8.0". Make sure the correct network address has been set for parameter C3 (internal variable I13) before setting the address of the CPY controllers. Each humidifier is configured by default with address 1, two units cannot have the same address.

"A"	analogue variables* (Modbus®: REGISTERS)
CAREL - Modbus®	
3	param. d9: rated capacity in kg/h (see the table of parameters)
4	param. d7: maximum production in kg/h (see the table of parameters)
15	param. d3: instant steam flow-rate in kg/h; read-only. Format "#### = #### (100 = 100 kg/h)".
30	param. d6: current (A); read-only. Format "#### = #### (16 = 16a)".
33	param. C8: maximum time with no data (sent to controller) over RS485 to generate stop production + "SU" alarm (see parameters table)

* The data from the controller should be interpreted with a decimal point. E.g.:
var. 3=150 means 15.0 kg/h

"I"		integer variables (Modbus®: REGISTERS)
CAREL	Modbus®	
1	256	param. P0: maximum production (see the table of parameters)
2	257	param. A0: operating mode (see the table of parameters)
3	258	param. A1: unit of measure (see the table of parameters)
4	259	param. A2: type of production request (see the table of parameters)
5	260	param. b1: additional functions (see the table of parameters)
6	261	param. b2: off delay time (see the table of parameters)
7	262	param. b4: water conductivity (see the table of parameters)
8	263	param. b5: conductivity pre-alarm threshold (see the table of parameters)
9	264	param. b6: conductivity alarm threshold (see the table of parameters)
10	265	param. b7: foam control threshold (see the table of parameters)
11	266	param. b8: conductivity control inside the cylinder in steady operation compared to rated value
12	267	param. C0: rated value displayed (see the table of parameters)
13	268	param. C3: serial port address (see the table of parameters)
14	269	param. C4: baud rate (see the table of parameters)
15	270	param. C5: supervisor: frame (see the table of parameters)
16	271	param. C6: serial response transmission delay (see the table of parameters)
17	272	param. b9: reduce duration of drain to dilute cycle (see the table of parameters)
18	273	param. bb: cylinder maintenance limit time in hours (see the table of parameters)
19	274	param. bE: time limit between two periodical drain cycles (see the table of parameters)
20	275	param. bF: days delay for drain due to inactivity (see the table of parameters)
44	299	param. d1: external control signal see paragraph "controlling production using variables I62 and I63, read-only; example format " #### = #### (0%-100%, step 1%)"
46	301	humidifier status (read-only)0 = not active (no request, shutdown or disabled); 1 = start evaporation cycle; 2 = water fill in progress; 3 = evaporation in progress ; 4 = AFS drain ; 5 = water drain (to dilute or manual); 6 = end of water drain; 7 = complete drain for long inactivity; 8 = complete drain from manual or network control; 9 = no water management; 10 = pre-wash; 11 = periodical drain
47	302	type of humidification stage (read-only) 0 = not active; 1 = soft start; 2 = start of steady production the reduced production; 3 = steady production; 4 = reduced production; 5, 6, 7 = soft start
49	304	param. d5: conductivity pre-alarm threshold [µS/cm] read-only, see the table of parameters
54	309	param. db: unit hour counter (not resettable, see the table of parameters)
55	310	param. dA: cylinder hour counter (resettable, see the table of parameters)
62	317	controls via RS485 ; bit 0: reset alarm log; bit 1: reset counter dA; bit 2: production request via variable I63; bit 3: pre-wash; bit 4: reset active alarms. ; Bit 6: flag to enable stop production + alarm for serial disconnected; Bit 7: flag to request oldest alarm; Bit 8: flag to request most recent alarm; Bit 9: flag to load first alarm in log; Bit 12: flag to enable create user backup. Except for bit2, the others are always read as 0. On power-up, all the bits are equal to 0.
63	318	production request via network (when I62 bit2 = 4) (0%-100%, step 1%).
64	319	control board match-digit (read-only)
67	577	param. c7 (see the table of parameters)
83	338	alarm status: Bit 0: at least one BLOCK alarm present ; Bit 1:at least one DISAB alarm present; Bit 2: at least one WARN alarm present
84	339	alarms with shutdown (read-only) bit n=0 alarm not active, bit n=1 alarm active. See table of alarms: bit 0: alarm Mn; bit 1: alarm EC; bit 2: alarm E1; bit 3: alarm E0; bit 4: alarm EH; bit 5: alarm EP; bit 6: not used; bit 7: not used.

85	340	alarms with disabling (read-only) bit n=0 alarm not active, bit n=1 alarm active. See table of alarms: bit 0: alarm EU (automatic reset); bit 1: alarm E3; bit 2: alarm EF (automatic reset); bit 3: alarm Ed; bit 4: not used; bit 5: not used; bit 6: not used; bit 7: not used.
86	341	warnings (read-only) bit n=0 alarm not active, bit n=1 alarm active. See table of alarms: bit 0: pre-alarm CY; bit1: warning Ec; bit 2: pre-alarm EA; bit 3: pre-alarm CP; bit 4: pre-alarm CL; bit 5, bit 6, bit 7: not used
89	344	read line in alarm log (see variable I62, bit7-8-9)

"D" CAREL - Modbus®	digital variables (Modbus®: COILS)
1	humidifier disabled by remote ON/OFF (terminals M2.4 M2.5) read-only
2	disabling control signal: D2=1 => CPY disabled; D2=0 => CPY enabled (similar to remote ON/OFF)
3	humidifier ready and awaiting request (read-only)
4	contactor status: 0 = open, 1 = closed (read-only)
5	status of 24 Vac drain output: 0 = no drain, 1 = drain (read-only)
6	status of drain relay output: 0 = no drain, 1 = drain (read-only)
7	cumulative alarm relay: 0 = not energised, 1 = energised (read-only)
8	status of 24 Vac fill output: 0 = no fill, 1 = fill (read-only)
10	high water level: 0 = probes not activated, 1 = probes activated (read-only)
17	manual drain control: 0 = not active, 1 = active; if set to 1 via the network, the drain will be performed until maximum time or variable 'D17' is reset
19	CPY terminal connected and on-line: 0 = not on-line, 1 = on-line (read-only)

11.8 Controlling production using variables I62 and I63

1. Via network, immediately after start-up, set D2 = 0 (D2 does not need to be set again if the board is not switch off).
2. Set I2 = 0 for ON/OFF control (A0 = 0), I2 = 1 for proportional control (A0 = 1)
3. Set I62 = 4 to send the request via variable I63. If A0=0, if I63 ≤50: OFF; if I63≥51: ON
4. Write the production request to variable I63, format 000 to 100 (0% to 100%).

NOTE: if bit6=1 in variable I62, steam production will stop when there is no control data flow over the RS485 serial link for a period exceeding the time set for parameter C8.
Production can resume when new data is sent.

11.9 Read alarm log via the network

Supervisor variable I89 shows the alarms saved in the log, one at a time. Normally this variable will always show the code of the most recent alarm; to scroll all the alarms saved, set the following bits of variable I62:

Variable I62 - bit7: Flag to request previous alarm (write-only)
Loads the code of the alarm saved prior to the current alarm displayed into variable I89.
If the current alarm is the oldest, the value 0 is loaded.

Variable I62 - bit8: Flag to request next alarm (write-only)
Loads the code of the alarm saved immediately after the current alarm displayed into variable I89.
If the current alarm is the most recent (for example after having set bit 0x0200), the value 0 is loaded

Variable I62 - bit9: Flag to load the last alarm in the log (write-only)
Loads the code of the most recent alarm into variable I89

The log can hold the most recent 366 alarms.

11.10 Loss of network communication

If there is a loss in network communication, UEY stops the unit by opening the contactor; UEY then goes into standby, without producing steam, and alarm E3 is displayed. Steam production resumes as follows:

- Communication is restored with the external controller: UEY automatically responds to the request from the external controller, and alarm E3 disappears.
- UEY is switched off and on again: UEY responds to the request from the external controller (if communication has been restored) or from the external signal (0-10 V, 4-20 mA, etc.) sent to terminals M2:1-2-3. In this way, if communication with the external controller is interrupted, steam production can be started again by switching UEY off an on again and sending the request using an external signal, 0-10 V (4-20 mA, etc.).

11.11 Modbus® protocol on the UEY boards

The Modbus® protocol can be selected using parameter C7 (see "Serial connection parameters").
Chapter 7 shows a list of variables and the corresponding addresses.
For multiple read/writes, the maximum number of "Register" or "Coil" variables is 20.
The following functions are available::

- MB_READ_COIL_STATUS 1: used to request the status (ON or OFF) of a certain number of "Coil" variables (binary, 1 bit), starting from the specified address. Broadcast mode is not allowed.
- MB_READ_INPUT_STATUS 2: operationally identical to the above.
- MB_READ_HOLDING_REG 3: used to request the value of a consecutive block of "Register" variables (numeric, 16 bit). Broadcast mode is not allowed.
- MB_READ_INPUT_REG 4: operationally identical to the above.
- MB_FORCE_SINGLE_COIL 5: used to set the status of an individual "Coil" variable (binary, 1 bit) to ON or OFF (specifying the address of the bit in question). Broadcast mode is allowed.
- MB_PRESET_SINGLE_REG 6: used to set the value of an individual "Register" variable (numeric, 16 bit). Broadcast mode is allowed.
- MB_FORCE_MULTIPLE_COIL 15: used to set the status of a consecutive block of "Coil" variables (binary, 1 bit) (specifying the number of bits and number of bytes). Broadcast mode is allowed
- MB_PRESET_MULTIPLE_REG 16: used to set the value of a consecutive block of "Register" variables (numeric, 16 bit). Broadcast mode is allowed.

11.12 Exceptions managed

01 illegal function
02 illegal data address
03 illegal data value

12. ADVANCED FUNCTIONS

12.1 Operating principle

Immersed electrode humidifiers manufacture steam by boiling the water contained inside the cylinder. The heat required to boil the water is produced by passing an electrical current through the cylinder. This is done by applying a voltage to the electrodes immersed in the water.
Initially, when the cylinder is new or has just been cleaned, the current depends almost exclusively on the type of supply water: the more salts in the water, the higher the current, and the required steam production is achieved quicker. Over time the salt deposits in the cylinder increase (these do not evaporate with the water), helping achieve the rated production. In steady operation, the level of production required is maintained automatically by controlling the current input, adjusting the level of water in the cylinder.
The salts that deposit over time cause the progressive depletion of the cylinder. To avoid excessive accumulation, the humidifier automatically drains and replenishes a certain quantity of water at set intervals.

12.2 Control principles

ON/OFF control

The action is all or nothing, activated by an external contact that consequently determines the control set point and differential.
The external contact may be a humidistat, whose status determines the operation of the humidifier:
• contact closed: the humidifier produces steam if the remote ON/OFF contact is also closed;
• contact open: the production of steam ends.

Proportional control

The production of steam is proportional to the value of a signal "Y" from an external device. The type of signal can be selected between the following standards: 0 to 10 Vdc, 2 to 10 Vdc, 0 to 20 mA, 4 to 20 mA.
The entire range is indicated as the proportional band. The maximum production of the humidifier, corresponding to the value maximum of the external signal, can be set from 20% to 100% of the rated value of the humidifier (parameter P0).
The minimum production has an activation hysteresis, hy, equal to 5% of the proportional band of the external signal "Y".

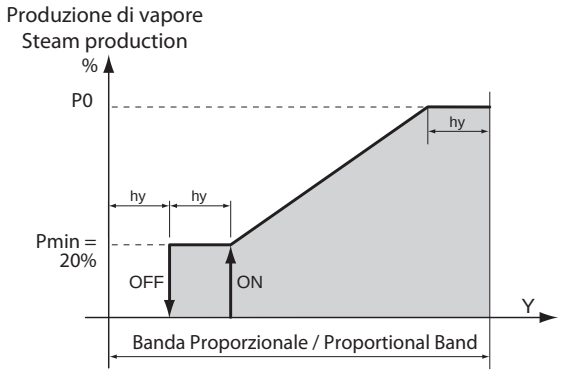

Fig. 12.a

12.3 Supply water conductivity

Conductivity measurement and alarms
The conductivity of the supply water is measured by the conductivity meter when the fill solenoid valve is opened.
Two programmable alarm thresholds are available:
• b5: warning threshold (signal only without activating the alarm relay, automatic reset when the condition is no longer present);
• b6: alarm threshold (unit shutdown with activation of the alarm relay).
The alarm is activated when the reading exceeds one of the two thresholds continuously for 60 minutes, or alternatively instantly if the value read is 3 times higher than the threshold.
To disable the alarm signal, simply set the thresholds above the maximum value of the reading.

12.4 Automatic draining

The humidifier automatically drains and replaces some of the water contained in the cylinder, to prevent an excessive concentration of salts following the evaporation process.
The drain pump is opened for a set time whenever the conductivity exceeds the maximum limit; this situation is measured indirectly by evaluating the evaporation speed.
During the automatic draining phase, the electrodes are off, so as to prevent the drain water from carrying current (the display shows "dr").

Drain due to excess foam

With certain types of supply water, foam may form during the production of steam just above the water. This situation must be resolved, as it may cause water to be released together with the steam. For this purpose, two electrodes are fitted on the top of the cylinder. When these electrodes detect the presence of foam, the humidifier activates a series of repeated drain cycles. If the situation persists, the complete washing of the cylinder is activated.

Drain due to inactivity

In humidifier does not operate for an extended time (it remains on but does not produce steam), the water in the cylinder is drained automatically, to avoid stagnation and hygiene risks. The inactivity time is set using parameter "bF" (default 3 days). The function can be disabled by setting parameter b1 (see paragraph 11.6).

Powered draining

When running an automatic drain cycle due to excessive salt, the electrodes are not powered and the production of steam is thus reduced. To keep the electrodes powered during the drain cycle set parameter b1 (see paragraph 11.6).

Draining due to a significant reduction in the request for production

In the event of a significant reduction in the request for steam production, the humidifier, rather than wait for the level of water (and thus the production) to decrease due to the effect of the production itself, performs a drain cycle. The reduction in the request for steam production is considered significant if the current is 33% higher than that relating to the requested level. This function can be disabled.
Set parameter b1 (see paragraph 11.6)

Periodical drain

When using water rich in substances such as humus and lime, a periodical drain cycle should be set for the cylinder to avoid accumulating residues.
To enable the periodical drain, set parameter b1 to 64. In this way, every 24 h the humidifier will drain all the stagnant water in the cylinder, and the display will show code "dP" (periodical drain). If the periodical drain is enabled, the number of hours between two periodical drain cycles can be set using parameter "bE".

Note:
For the manual drain function, see chap. 6, for the mechanical drain see paragraph 9.4.

12.5 Automatic insufficient supply water management

The humidifier checks whether there is no supply water or the flow-rate of supply water is too low, by controlling if the current at the electrodes increases after opening the fill solenoid valve.
In this case, the humidifier:
- displays alarm "EF"
- activates the alarm relay,
- opens the contactor and closes the fill solenoid valve for 10 minutes.

After the 10 minutes, the fill solenoid valve is opened, the contactor closed and the phase current measured: if it increases the alarm is deactivated, otherwise the procedure is repeated.

NOTE: the alarm is reset automatically and is managed according to the procedure described above.

12.6 Alarm relay switching

Once the operating hours corresponding to the cylinder maintenance request have been reached ("CY" alarms), the alarm relay (if there are no other alarms active) will switch for 10 seconds every 12 hours, until reaching the "Mn" alarm.
This function is activated using parameter b1 (see paragraph 11.6); normally disabled

12.7 Auxiliary contact management (active fan request)

The auxiliary contact can be used to:
- remote signalling of steam production request (but not the actual value);
- activation/deactivation of an external fan unit, based on whether the steam production request is present.

Activating this function by parameter b1, the contact is activated (CLOSED) during steam production, with a delay of A6 seconds, and deactivated (OPEN) with a delay of A7 seconds.
During A6 and A7 the symbol (fan) will flash on the display, during activation the symbol (fan) will be on steady.

During the manual drain (see Chap. 6.12) the contact will be deactivated (always after the delay A7)
During pre-wash (see Chap. 6.1) the contact be activated, with the corresponding delays.

12.8 Manual procedure

This procedure is used to manually control the devices on the humidifier.

From the main screen, press the PRG button for 2 seconds.
Enter the password 70 using UP or DOWN.
The display will show **MAn**
Press PRG.
The display will show **tlr**
Then scroll the various devices using UP and DOWN:

- **tlr** = Contactor
- **drn** = Drain pump
- **FiL** = Fill SV
- **drt** = Drain tempering SV
- **ALr** = Alarm relay
- **FAn** = Auxiliary contact (fan)

Pressing PRG from any these options shows:

ON if the device is currently active
OFF if the device is currently inactive

Press PRG; the display starts flashing
Press UP or DOWN to modify the value
Press PRG to confirm.

Press ESC to return to the previous display.

N.B. THE MODE CAN ONLY BE EXITED USING THE ESC BUTTON FROM THE MAn DISPLAY OR BY SWITCHING OFF THE HUMIDIFIER.

12.9 LEDs on the control board

There are three LEDs fitted on the expansion board, located above the control board:

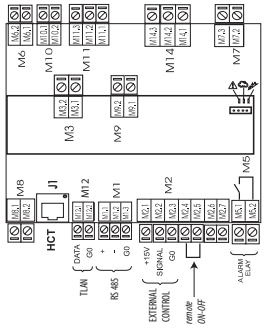

Fig. 12.b

Key:

LED on board	Symbol on display	Meaning
Red		alarm in progress (the type of alarm can be identified based on the type of flashing, see chap. 8)
Yellow		steam production in progress (led always on for 100% production, 2 blinkng 20%, 3 blinking 30%, ...)
Green		humidifier on

Tab. 12.a

NOTE: The yellow and red LEDs are active only if the display is disconnected.

CAREL

CAREL INDUSTRIES HQs
Via dell'Industria, 11 - 35020 Brugine - Padova (Italy)
Tel. (+39) 049.9716611 - Fax (+39) 049.9716600
e-mail: carel@carel.com - www.carel.com

Agenzia / ***Agency***:

"UE BASIC" +03U0042EN - 1.3 - 10 May 2013