4200 Series

Electromechanical Closer-Holder Releasing Device

An ASSA ABLOY Group brand

ASSA ABLOY

introduction

The 4200 Series Electromechanical Closer-Holders combine the functions of an electromechanical door holder with the 400 series door closer. The 4200 features a choice of two types of hold open functions:

Selective Hold Open (standard): The door will hold open at any degree of opening beyond a pre-set hold open point, up to 175°, with a maximum allowable door opening of 180° (exception series 4250 at 110°). Factory set at 80°, but is adjustable to virtually any degree of door opening desired.

Infinite Hold Open: The door will hold open at any degree of opening up to 175° with a maximum allowable door opening of 180° (exception series 4250 at 110°). **Infinite Hold Open can be set in the field by turning the cam.**

contents

Overview, Basic Units,
Specifications 3
Features 4
Compliance Standards,
How To Order. 5
4210/4250
Master Units 6-7
Slave/Support Units 8-9
4220/4230
Master Units 10-11
Slave/Support Units 12-13
4210/4250
4240 Connected Free
Swing Releasing Device 14
4290 Overhead
Concealed Units 15
Parts 16-17

cutaway view of closer body

Master Unit Shown

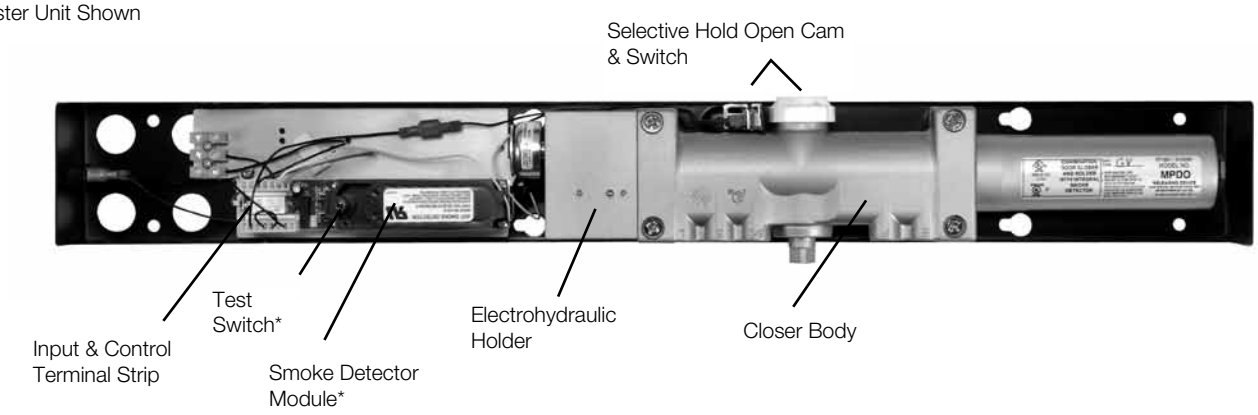

*Master Unit Only

overview

basic units

Master Unit: 4200MPDO
Consists of an on-board power supply (for 120VAC input option) or a terminal strip (for 24VDC input option), an integral smoke detector module and a door closer assembly with internal electro-hydraulic holder capability. A Master Unit can control a single door or one leaf of a pair of doors. A 24VDC Slave/Support Unit is required on the opposite door leaf.

Slave/Support Unit: 4200MPSO
Identical in size to the Master Unit, the Slave/Support Unit consists of an on-board power supply (for 120VAC input option) or a terminal strip (for 24VDC input option) and a door closer assembly with internal electro-hydraulic holder capability. This unit (120VAC or 24VDC) is intended to control a single door or a pair of doors where the building's alarm system monitors the power to the Slave/Support Unit (24VDC input) to control the inactive leaf of a pair of doors where the active leaf is controlled by a Master Unit.

Executive™ Unit: RFS Suffix
Identical in size and appearance to a Master Unit, the Executive Unit consists of an on-board power supply (for 120VAC input option) or a terminal strip (for 24VDC input option), a 433MHz radio frequency receiver and a door closer assembly with internal electro-hydraulic holder capability. Unit is intended to provide remote wireless release of a door that has been manually placed into the electrified hold open position. Not intended for use in life safety applications.

specifications

Closer for _____ doors shall be electromechanical (with integral smoke detector) and completely enclosed in a metal cover. Units shall be surface mounted to the frame face [on the pull (hinge side) on the push (opposite hinge side)] of the door [and shall project no more than 2-11/16" (68mm) from the surface of the frame]. (Closer shall be installed in the header of the frame, and the slide track mortised into the door's top rail). Closer unit shall be hydraulic, full rack and pinion type with a cast aluminum alloy shell. Hydraulic fluid shall be non-gumming and non-freezing. Closer unit shall have two non-critical valves to independently regulate closing and latch speed. It shall also have an adjustable backcheck with a hex-key. Closer unit shall have spring power adjustment to permit a 50% increase in closing power over the minimum closing force for any size. Electromechanical Closer shall have (Infinite) (Selective) Hold Open (Free Swing Operation) and shall be able to attain a maximum opening of 180° (with hold open to 175°). Unit to be fail safe and must close the door during any electrical power interruption to the unit. (Closer-Holder to be Executive™ Door Holder/Release with release actuated by battery operated hand-held controller). Unit(s) to operate on (120VAC, 60Hz) (24VDC) and will accept (surface) (concealed) wiring. Amperage draw shall not exceed (.105 Amps for 24VDC) (0.46 Amps for 115VAC) units. Supplier to coordinate electrical requirements with electrical and alarm system engineers. Wiring (and conduit) by others.

Electromechanical Units to be Yale® Series 4200 (Closer-Holder) (Free Swing Releasing Device), (Executive™ Door Holder/Release).

features

Aluminum Alloy Housing
Closer bodies are constructed of a special aluminum alloy, carefully selected to accommodate interactive steel components and operating conditions.

Rack & Pinion Operation
Provides a smooth constant control of the door through its full opening and closing cycle.

Spring Sizes
Specify closer size 3, 4 or 5. Size 6 available with 4290 overhead concealed units.

Sweep Speed Control Valve
Allows adjustment of door speed from the door's full open position down to approximately 10° from the closed position.

Latch Speed Control Valve
Allows adjustment of door speed from approximately 10° down to the door's fully closed position.

Adjustable Backcheck Cushioning
Provides control of the door in the opening cycle, beginning at approximately 75° of door opening. It slows/cushions the door opening, when the door is forcibly opened beyond its pre-adjusted limits.

Adjustable Backcheck Position Valve
Allows the door opening position, where backcheck cushioning begins, to be adjusted to a greater door angle, up to a maximum of 20° farther (approximately 95°).

Handed
Specify right or left hand when ordering.

Selective Hold Open (Standard)
The door will hold open at any degree of opening beyond a pre-set hold open point, up to 175°, with a maximum allowable door opening of 180° (exception series 4250 at 110°). Factory set at 80°, but is adjustable to virtually any degree of door opening desired.

Infinite Hold Open
The door will hold open at any degree of opening up to 175°, with a maximum allowable door opening of 180° (exception series 4250 at 110°). Can be set in the field by turning cam.

Fail Safe
In the event of a power failure, the solenoid will de-energize and the closer-holder will then operate as a normal door closer.

Wiring Option
All 4200 Series Electromechanical Closer-Holders will accommodate either concealed or surface wiring.

Selective Hold Open Switch and Cam:
The Selective Hold Open starting point is determined by a switch and adjustment cam assembly. The cam is attached to the upper pinion shaft by means of a machine screw. As the door is opened, the pinion shaft will rotate the cam and operate the switch to the "on" position to initiate hold open. When the door is closed, the pinion cam will operate the switch to the "off" position. The cam is factory set to operate at 80° of door opening. The cam can be easily field adjusted to operate at virtually any degree of door opening.

units with detectors

Fire/Smoke Control Circuit:
Interprets the signal from the detector and provides switching contacts to interrupt hold open solenoid, to sound alarms, etc.
Alarm (Relay) Contacts:
Normally open in standby condition (operating and sensing for smoke condition). These contacts close during an alarm condition (smoke detected) and may be used to switch power from the solenoid to an optional local alarm.
Trouble (Relay) Contacts:
Normally closed in standby condition, these supervisory contacts monitor the continuity of power within the detector circuit. Any power interruption within the detector circuit will open these contacts. They can then be used to simultaneously indicate a Trouble Condition to the Alarm Panel on a separate trouble circuit.

Locked-In Alarm:
The unit which alarms must be manually reset. This can be accomplished by remote control from the alarm system panel or by the reset switch in the smoke detector module. Reset switch is accessible through the center louver in the cover. Reset by rotating LED chambers using small flat blade screwdriver.
Indicator Lights:
Normal Mode: A red LED flashes once every eight (8) seconds.
Clean Mode: A red LED flashes once every second.
Alarm Mode: A red LED illuminates continuously.
Test Switch:
Permits door to be released from hold open without causing a "trouble condition" at the alarm panel. Allows for periodic testing of the automatic door release function.

how to order

compliance standards

4200 Series is ANSI/BHMA A156.15 certified. BHMA CERTIFIED
Electromechanical Closer-Holders are listed by Underwriters Laboratories for labeled fire doors. The product is manufactured in an ISO 9001 facility.

how to order

42	1	4	MPDO	x Hand	x Voltage	x Finish

4200 Series Closer-Holder

Closer Size

Slide Arm & Track and Connected Free Swing Arm	Maximum Door Size
"3"	40"
"4"	44"
"5"	48"
Overhead Concealed	
"4"	32"
"5"	38
"6"	48"
Double Lever Arm	
"3"	42"
"4"	48"

Suffix:
Selective Hold Open
MPDO - Master Unit
MPSO - Slave/Support (24VDC only when used with Master Unit)

Executive™ Door Release
RFS - Selective Hold Open

D - Drop Application (for 4220 and 4230 series only)

RH - Right Hand
LH - Left Hand

FINISHES
Product will be sprayed with a combination of waterborne acrylic and polyester powder coat.

Specifies side of door unit is mounted on and the type of arm

Pull Side
"1" - Rigid Slide Arm & Track
Maximum reveal 1/8" (3mm)
"4" - Connected Free Swing Slide Arm & Track
Maximum reveal 1/8" (3mm)
"5" - Double Egress Slide Arm & Track
Reveals 1/8"-3" (3-76mm) to 110°
"9" - Overhead Concealed Door Closer with Rigid Slide Arm & Track

Push Side
"2" - Double Lever Arm
Reveals 2-3/4"-4" (70-120mm) to 180°
Reveals 4"-7" (102-179mm) to 165°
"3" - Double Lever Arm
Reveals 4"-7" (102-179mm) to 180°

Description	Specify Designation (BHMA)	Complements the following finishes	Old Designation
Aluminum	689	625, 628, 629, 630, 651	SB
Statuary Bronze	690	613, 640	STAT
Dull Bronze	691	612, 637, 639	BL
Black	693	315	315
Medium Amber	694	312	312
Gold	696	605, 606, 632, 633	GB
Prime Coat*	600		SRI

***600 is a special rust inhibiting prime coat. Closers can be ordered prime coat only (specify closer x 600). An additional charge applies if finish coat is required over prime coat (ex: 4200MPO x 600 x 689). Finishes other than those listed above may be available on special order. Sample chips will be required.**

Note: Contact factory if door weight exceeds 250 lbs.

master units

4210/4250

4210MPDO Shown

- Surface mounted to the pull (hinge) side frame face
- Slide track mounts directly to door
- Minimum 4" ceiling clearance required
- 1/8" (3mm) – standard frame reveal. For deeper reveals, a special slide arm is required (see chart on page 9).
- Handed
- Standard units accommodate doors opening 180°; maximum 175° hold open
- Buffer block assembly in the track will accommodate doors opening to 125°
- Auxiliary door stop is required for doors opening beyond 125°
- Units shipped Selective Hold Open; Infinite Hold Open can be set in the field.
- Fail Safe – solenoid will de-energize in the event of power failure
- Accommodates either concealed or surface wiring

Single Doors:

- **Master Units with Integral Smoke Detector:**
  Both Series 4210MPDO, 4250MPDO are self-contained and can be installed to control a single door.
- **Executive™ Door Holder/Release:**
  Both Series 4210RFS, 4250RFS are self-contained and can be installed to control a single door.

Pair of Doors:

- **Master Unit x Slave/Support Unit:**
  Smoke Detector in the Master Unit controls the Closer-Holder solenoid in both the Master Unit and the Slave/Support Unit.

technical details

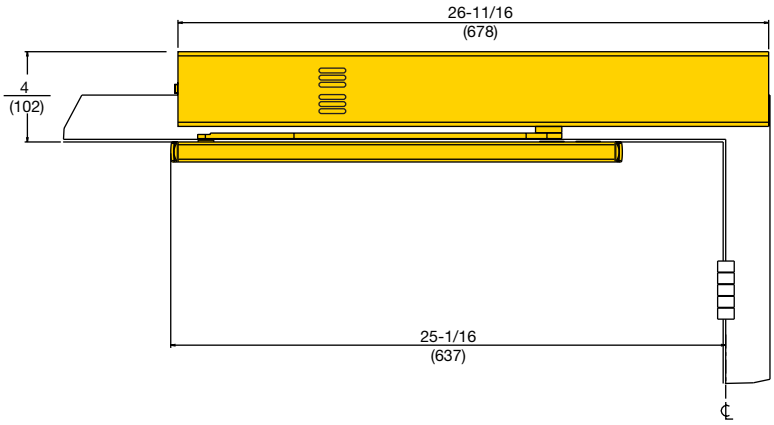

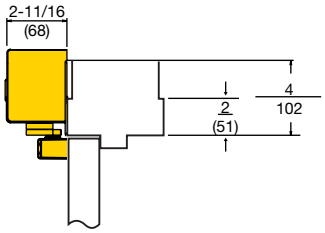

master units

door size

Maximum Door Size	Model Number	
	Standard Reveal (to 1/8" (3mm) reveal)	Deep Reveal (see note below)
	Selective Hold Open	
40" (102cm)	4213MPDO	4253MPDO
44" (112cm)	4214MPDO	4254MPDO
48" (122cm)	4215MPDO	4255MPDO

Minimum door size = 28" (71cm)

Note: **Deep Reveals**
- Special slide arm is available for reveals in excess of 1/8" (3mm) up to 3" (76mm) 4250MPDO series.
- 110° maximum door swing

electrical data

Master Units							
Model Number	Suffix	Operating Voltage (Input)	No. Power Input Lines* (Pairs)	Amperage Draw			(Can be) Used with Slave Unit
				Smoke Detector		Solenoid Coil	
				Standby	Alarm		
4210 4250	MPDO	24VDC 120VAC	1	.016@ 24VDC	.035@ 24VDC	.070@ 24VDC	4210MPSO-24 4250MPSO-24

Executive™ Door Holder Release			
Model Number	Operating Voltage (Input)	No. Power Input Lines* (Pairs)	Amperage Draw
			Solenoid Coil
4210RFS	120VAC 24VDC	1	.070@ 24VDC

***Max/Min Operating Voltage Parameters +10% / -15%**

slave/support units

4210/4250

- Surface mounted to the pull (hinge) side frame face
- Slide track mounts directly to door
- Minimum 4" ceiling clearance required
- 1/8" (3mm) – standard frame reveal. For deeper reveals, a special slide arm is required (see chart on page 9).
- Handed
- Standard units accommodate doors opening 180°; maximum 175° hold open (110° maximum for 4250 series).
- Buffer block assembly in the track will accommodate doors opening to 125°
- Auxiliary door stop is required for doors opening beyond 125°
- Units shipped Selective Hold Open; Infinite Hold Open can be set in the field
- Fail Safe – solenoid will de-energize in the event of power failure
- Accommodates either concealed or surface wiring

4210MPSO Shown

Pairs of Doors:

- **Master Unit x Slave/Support Unit:**
  Smoke Detector in the Master Unit controls the Closer-Holder solenoid in both the Master Unit and the Slave/Support Unit.

technical details

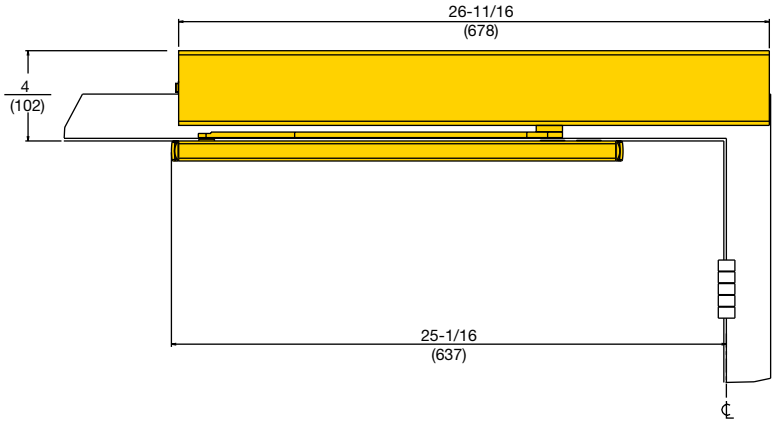

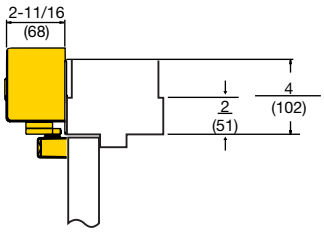

slave/support units

door size

Maximum Door Size (cm)	Model Number	
	Standard Reveal (to 1/8" (3mm) reveal)	Deep Reveal (see note below)
	Selective Hold Open	
40" (102)	4213MPSO	4253MPSO
44" (112)	4214MPSO	4254MPSO
48" (122)	4215MPSO	4255MPSO

Note: **Deep Reveals**
- Special slide arm is available for reveals in excess of 1/8" (3mm) up to 3" (76mm), 4250MPSO series
- 110° maximum door swing

electrical data

Series Number	Suffix	Operating Voltage (Input)	No. Power Input Lines* (Pairs)	Amperage Draw	(Can be) Used with Master Unit
				Solenoid Coil	
4210 4250	MPSO	24VDC (only) 24VDC supplied from Master Unit	1	.070@ 24VDC	4210MPDO-24 4250MPDO-24
					4210MPDO-120 4250MPDO-120

*** Max/Min Operating Voltage Parameters +10% / -15%**

master units

4220/4230

- Surface mounted to the push (stop) frame face
- Double lever arm mounts directly to the door
- Minimum 4" (102mm) ceiling clearance required
- Handed
- Standard units accommodate doors opening 180°; maximum 175° hold open
- Units shipped Selective Hold Open; Infinite Hold Open can be set in the field
- Fail Safe – solenoid will de-energize in the event of power failure
- Accommodates either concealed or surface wiring

4220MPDO Shown

Single Doors:

- **Master Units with Integral Smoke Detector:**
  Both Series 4220MPDO, 4230MPDO are self-contained and can be installed to control a single door.
- **Executive™ Door Holder/Release:**
  Both Series 4220RFS, 4230RFS are self-contained and can be installed to control a single door.

Pairs of Doors:

- **Master Unit x Slave/Support Unit:**
  Smoke Detector in the Master Unit controls the Closer-Holder in both the Master Unit and the Slave/Support Unit.

technical details

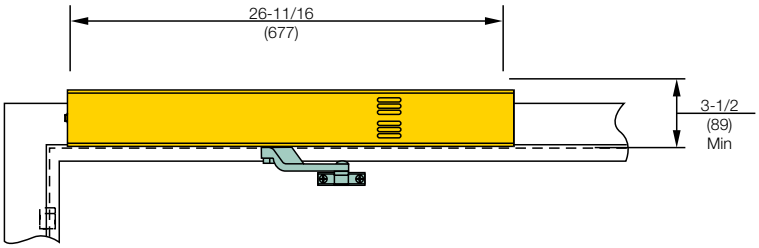

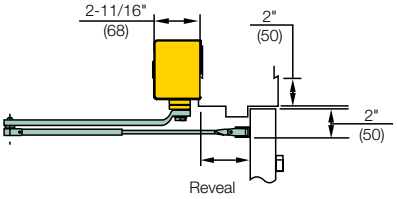

Note: For applications with narrow top rails or limited ceiling clearance, a special drop angle bracket is required.
See page 17.

master units

door size

Maximum Door Size (cm)	Model Number		Maximum Degree of Opening	Reveal Range (Inches/mm)
	Closer-Holder	Executive™ Door/Release		
	Selective Hold Open			
42" (107)	4223MPDO	4223RFS	180°	2-3/4" - 4" (70-102)
			165°	4"-7" (102-178)
	4233MPDO	4233RFS	180°	4"-7" (102-178)
48" (122)	4224MPDO	4224RFS	180°	2-3/4" - 4" (70-102)
			165°	4"-7" (102-178)
	4234MPDO	4234RFS	180°	4"-7" (102-178)

electrical data

Master Units							
Series Number	Suffix	Operating Voltage (Input)	No. Power Input Lines* (Pairs)	Amperage Draw			(Can be) Used with Master Unit
				Smoke Detector		Solenoid Coil	
				Standby	Alarm		
4220 4230	MPDO	24VAC/DC	1	.016@ 24VDC	.035@ 24VDC	.070@ 24VDC	4220MPSO 4230MPSO
		120VAC					

Executive™ Door Holder Release			
Series Number	Operating Voltage (Input)	No. Power Input Lines* (Pairs)	Amperage Draw
			Solenoid Coil
4220RFS 4230RFS	120VAC	1	.070@ 24 VDC
	24VDC		

***Max/Min Operating Voltage Parameters +10% / -15%**

slave/support units

4220/4230

- Surface mounted to the push (stop) frame face
- Double lever arm mounts directly to the door
- Minimum 4" (102) ceiling clearance required
- Handed
- Standard units accommodate doors opening 180°; maximum 175° hold open
- Units shipped Selective Hold Open; Infinite Hold Open can be set in the field
- Fail Safe – solenoid will de-energize in the event of power failure
- Accommodates either concealed or surface wiring

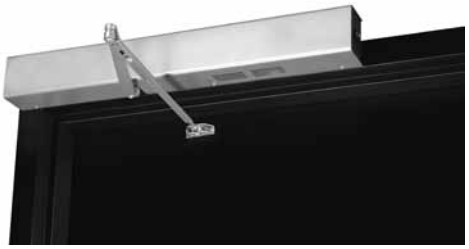

4220MPSO Shown

Pairs of Doors:

- **Master Unit x Slave/Support Unit:**
  Smoke Detector in the Master Unit controls the Closer-Holder in both the Master Unit and the Slave/Support Unit.

technical details

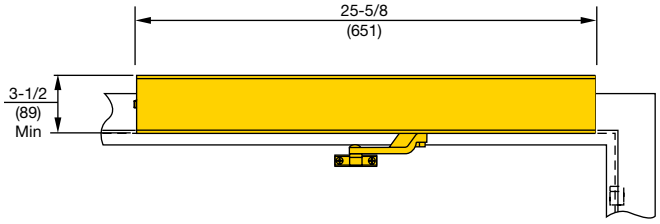

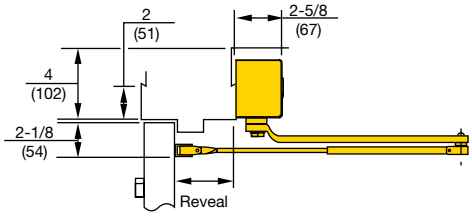

Note: For applications with narrow top rails or limited ceiling clearance, a special drop angle bracket is required.
See page 17.

slave/support units

door size

Maximum Door Size (cm)	Model Number Selective Hold Open	Maximum Degree of Opening	Reveal Range (Inches/mm)
42" (107)	4223MPSO	180°	2-3/4" - 4" (70-102)
		165°	4"-7" (102-178)
	4233MPSO	180°	4"-7" (102-178)
48" (122)	4224MPSO	180°	2-3/4" - 4" (70-102)
		165°	4"-7" (102-178)
	4234MPSO	180°	4"-7" (102-178)

electrical data

Model Number	Suffix	Operating Voltage (Input)	No. Power Input Lines* (Pairs)	Amperage Draw Solenoid Coil	(Can be) Used with Master Unit
4220 4230	MPSO	24VDC (only) 24VDC Supplied from Master Unit	1	.070@ 24VDC	4220MPDO-24 4230MPDO-24
					4220MPDO-120 4230MPDO-120

***Max/Min Operating Voltage Parameters +10% / -15%**

4240 connected free swing arm

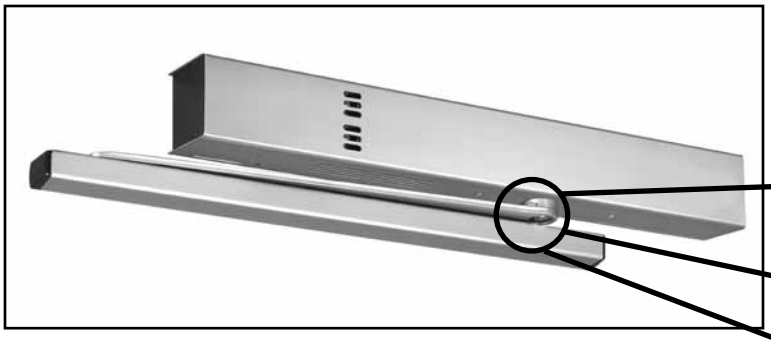

Door open

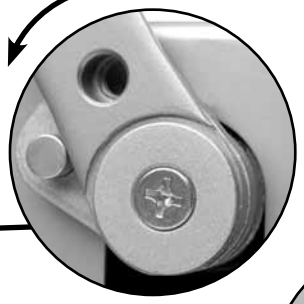

As the door is opened, the rigid slide arm rotates the arm driver and the pinion shaft of the closer mechanism.

Door free swing

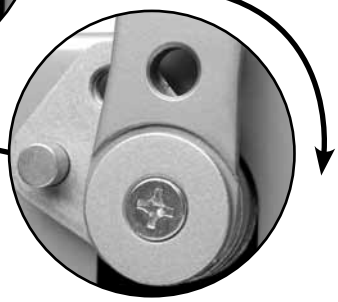

When the door has been opened and released, the unit's electrically controlled plunger valve will hold the pinion shaft and arm driver at that degree of door opening. The door is then free to swing unhindered.

Door close

After Fire/Smoke detection alarm or any power interruption to the control, the pinion shaft and arm driver are released to close the door.

The connected free swing arm assembly provides the convenient automatic closing fire door protection for health care facilities or other locations where it is desired to neutralize the effort required to open or close a door. With no spring force on the door during the normal operation, patients, the handicapped and/or staff find the door easy to open, close or leave ajar.

Functions:

- Arm driver connected to the closer pinion drives the pinion when the door is opened and the slide arm rotates.
- When unit is energized the pinion and arm driver remain at the point where door was initially opened.
- Arm is connected to the pinion but is free to pivot.
- The door is free to open, close or be set at any degree of opening.
- When there is a Fire/Smoke alarm or any power interruption, the hold open control valve is released, and door closes.
- Units shipped Selective Hold Open; Infinite Hold Open can be set in the field.

UL Listed:

4200 Series with Connected Free Swing arm is UL listed as a releasing device for Fire/Smoke Barrier doors.

Maximum Door Size (cm)	Model Number			
	Master	Slave	Support	Executive™ Door Release
	Selective Hold Open			
40" (102)	4243MPDO	4243MPSO	4243MPO	4243RFS
44" (112)	4244MPDO	4244MPSO	4244MPO	4244RFS
48" (122)	4245MPDO	4245MPSO	4245MPO	4245RFS

Specify voltage and hand of door when ordering

4290 overhead concealed support unit

controlled remotely by area/ceiling detectors

- Handed
- Unit concealed in the header of the frame
- Installation requires a 4" (102mm) high frame header
- A 2" x 4" (51 x 102mm) dust/grout box and a removable frame stop (provided by the door and frame supplier) are required
- Slide track is mortised in the door's top rail
- Standard units accommodate doors opening 180°; maximum 175° hold open
- Buffer block assembly in the track will accommodate doors opening to 125°
- Auxiliary door stop is required for doors opening beyond 125°
- Units shipped Selective Hold Open; Infinite Hold Open can be set in the field
- Intended for use with compatible UL listed ceiling alarm detection equipment
- Fail Safe – solenoid will de-energize in the event of power failure

technical details

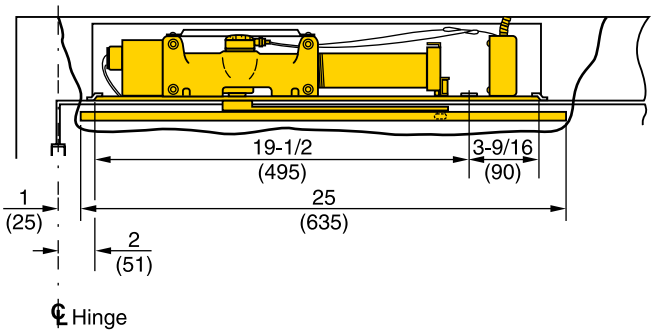

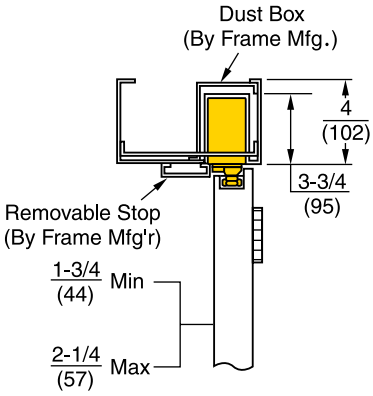

door size

Maximum Door Size (cm)	Model Number
	Selective Hold Open
32" (81)	4294MPS
38" (97)	4295MPS
48" (122)	4296MPS

electrical data

Model Number	Suffix	Number power Input Lines* (pairs)	Operating Voltage (input)	Amperage Draw Solenoid Coil (Amperes)
4290	MPS	1	24VAC/DC	.070@ 24VAC/DC
			120VAC	.035@ 120VAC

***Max/Min Operating Voltage Parameters +10% / -15%**

parts

closer bodies

Description	Voltage	Hand	Part Number*
4200 Closer-Holder Assembly	24V	Left	420XLAPS24L
		Right	420XLAPS24R

***Substitute the power size 3, 4 or 5 for the "X" in the catalog number.**

arm and track assemblies

Description	For Series	Part Number
Slide Track	4210, 4240, 4250	4100-1T
Slide Arm	4210	4110-1A
Connected Free Swing Arm	4240	4140-1A
Double Egress Arm - Right Hand	4250	4150-1R
Double Egress Arm - Left Hand		4150-1L
Double Lever Arm	4220	400-1A
Double Lever Arm	4230	400-1B
Arm Assembly NHO - Right Hand	4290	4290-1R
Arm Assembly NHO - Left Hand		4290-1L
Track Assembly NHO		4950ST

parts

track and arm parts

Description	Part Number
Cushion Block (part of slide track assembly)	4100CB
Screw Pack for CFS Arm	4240SP

miscellaneous parts

Description	Part Number
Cover (Slave/Support Units)	MPSOCOV
Cover (Master Units)	MPDOCOV
Selective Hold Open Switch Assembly 24V	SHOK
Switch 24V	SHO

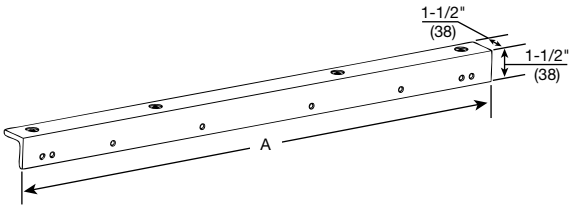

Description	Part Number	A (Length)
Drop Angle Bracket	4100DAB	29-9/16" (675)
	4100DAB-180	24-9/16" (621)

online literature and templates

For the latest information on Yale Locks & Hardware products, visit our website at: www.yalelocks.com

Click on the “Product Information” button to find:

- Catalogs
- Parts manuals
- Templates
- Specifications
- Installation instructions

Yale® customers can click on the ebusiness symbol on the website to register for an ebusiness account to:

- Check the status of orders
- Check availability of QuickShip items
- Track your order and confirm delivery
- Receive email notification of template changes
  And More...

Or contact us at:

U.S.A.
Yale Locks & Hardware
Address: 225 Episcopal Road, Berlin, CT 06037-4004
Tel: 1-800-438-1951 • Fax: 1-800-338-0965 • www.yalelocks.com

Canada:
ASSA ABLOY Door Security Solutions Canada
Address: 160 Four Valley Drive, Vaughan, Ontario L4K 4T9
Tel: 1-800-461-3007 • Fax: 1-800-461-8989 • www.assaabloy.ca

International:
ASSA ABLOY Americas International
Tel: 1-905-821-7775 • Fax: 1-905-821-1429 • www.assaabloyai.com

Yale Locks & Hardware is a division of Yale Security Inc., an ASSA ABLOY Group company.

Yale® is a registered trademark of Yale Security Inc., an ASSA ABLOY Group company. Executive™ is a trademark of Yale Security Inc., an ASSA ABLOY Group company. Other products' brand names may be trademarks or registered trademarks of their respective owners and are mentioned for reference purposes only. These materials are protected under U.S. copyright laws. All contents current at time of publication. Yale Security Inc. reserves the right to change availability of any item in this catalog, its design, construction, and/or its materials. Copyright © 2005, 2012, Yale Security Inc., an ASSA ABLOY Group company. All rights reserved. Reproduction in whole or in part without the express written permission of Yale Security Inc., an ASSA ABLOY Group company, is prohibited.

YALE, *with its unique global reach and range of products, is the world’s favorite lock.*

ASSA ABLOY *is the global leader in door opening solutions, dedicated to satisfying end-user needs for security, safety and convenience.*

42078-9/12R