LIM800

MX Detection Range - Line Isolator Module

VIGILANT

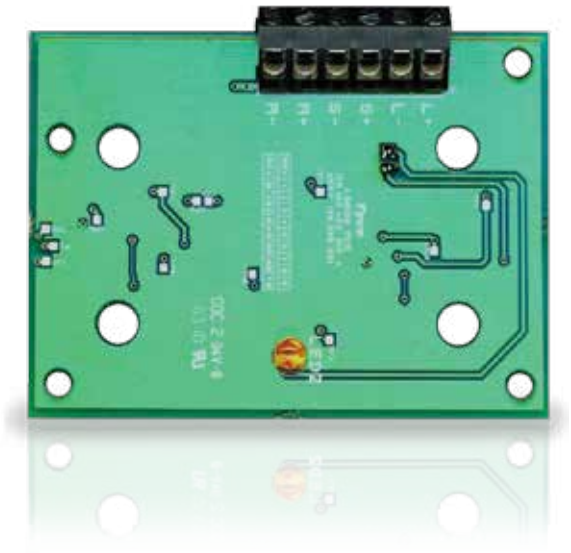

Features

// Automatic short-circuit protection for the *MX* Addressable Loop

// LED indication of LIM800 operation

// Common *MX* module footprint

// Range of mounting enclosures

Description

The LIM800 is an *MX* Addressable Loop Isolator Module that can be used to provide short circuit isolation between zones or portions of the *MX* addressable loop. LIM800s are installed at appropriate positions around the *MX* loop to monitor the loop voltage either side of the device. If the voltage drops to zero volts (e.g. due to a short), the two LIM800s either side of the short open their electronic switches and isolate the shorted section allowing the rest of the loop to be driven by the *MX* Control and Indicating Equipment (CIE). The LIM800 includes an additional spur output that can be wired to additional *MX* devices (usually all in one zone [3]). If a short occurs on the spur, the two electronic switches in the LIM800 operate and disconnect the shorted spur from the loop. The LIM800 includes a yellow LED to indicate when one of its connections is shorted. The LIM800 supports up to 100 IB units of *MX* load on each connection, so additional LIM800s can be installed on long sections of cable to isolate each block of devices. Refer to the appropriate CIE manual for technical design specifications.

Mounting

The LIM800 is supplied as an open circuit board (PCB) with mounting hardware and must be fitted into a suitable enclosure. It may be mounted on a gearplate using plastic standoffs, to an M520 Ancillary Cover and K2142 back box, or into a D800 Ancillary Housing. The K2142 mounting box provides a convenient surface mounting enclosure and the M520 cover is designed to accomodate the LIM800.

Specifications

Loop Voltage [1]	20V to 40Vdc
Input Current	
Normal	80µA
Tripped (max.)	10mA
Series Resistance (max.)	0.25 Ohm
Equivalent Capacitance	0.5nF
IB Units between Isolator	100 (max.)
Max. LIM800 per Loop [2]	200/250
Ambient Temperature	–25°C to +70°C
Storage Temperature	–40°C to +80°C
Relative Humidity	10% to 95% (non cond.)
Indoor Applications Only	
Dimensions (HWD)	61 x 84 x 14 mm
Wire Size (maximum)	2.5sq. mm
ActivFire Listing	afp-1446
FPANZ Listing	VF/657

Part Numbers

545.800.004	LIM800
M520	Ancillary Cover
517.035.010	K2142 Back Box
557.201.401	D800 Ancillary Housing

1. Addressable loop voltage provided by *MX* CIE.
2. Maximum number of devices between isolators limited to 40 for AS 1670.1-2004 systems. Refer to LT0273 (MXP), LT0360 (*MX1*-NZ), LT0441 (*MX1*-Au) for design specifications.
3. Not approved for external wiring on MX4428.

Wiring

LIM800 wiring:

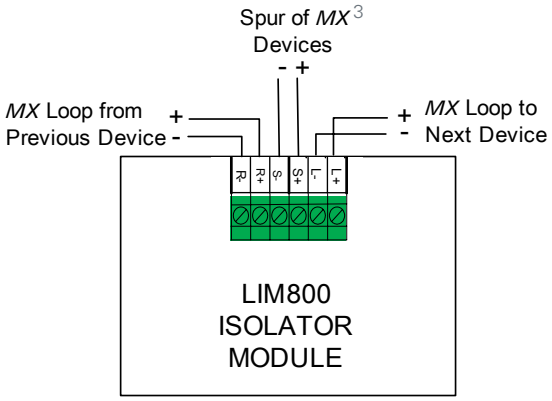

Termination

L+ Line IN +ve
L– Line IN -ve
S+ Spur +ve
S– Spur -ve
R+ Line OUT +ve
R– Line OUT -ve

Mounting

LIM800 fitted to M520 Cover.

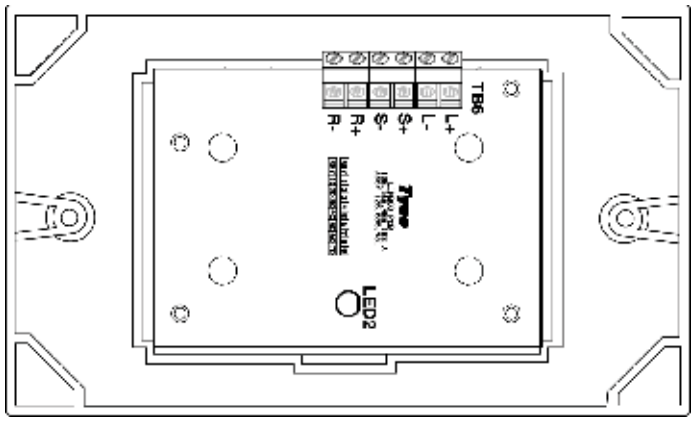

Australia
Tyco Fire Protection Products
Level 3, 95 Coventry Street
Southbank VIC 3006
Tel : 1300 725 688
Tel : +61 3 9313 9700
Email : tfppcustservice.au@tycofp.com

New Zealand
Tyco Fire Protection Products
17 Mary Muller Drive
Hillsborough PO Box 19-545
Woolston Christchurch 8241
Tel : +64 9 635 0760
Email : tsp.sales.nz@tycoint.com

Copyright © 2015 Tyco Australia Pty Limited. All rights reserved. Tyco reserves the right to make changes to any aspect of this publication at any time without notice. VIGILANT is a trademark of Tyco New Zealand Limited or its affiliates; *MX TECHNOLOGY* is a trademark of Thorn Security Limited or its affiliates; TYCO is a trademark of Tyco International Services GmbH.

tyco Fire Protection Products

Safer. Smarter. Tyco.™