Telstar®

Helium Leak Testing Systems

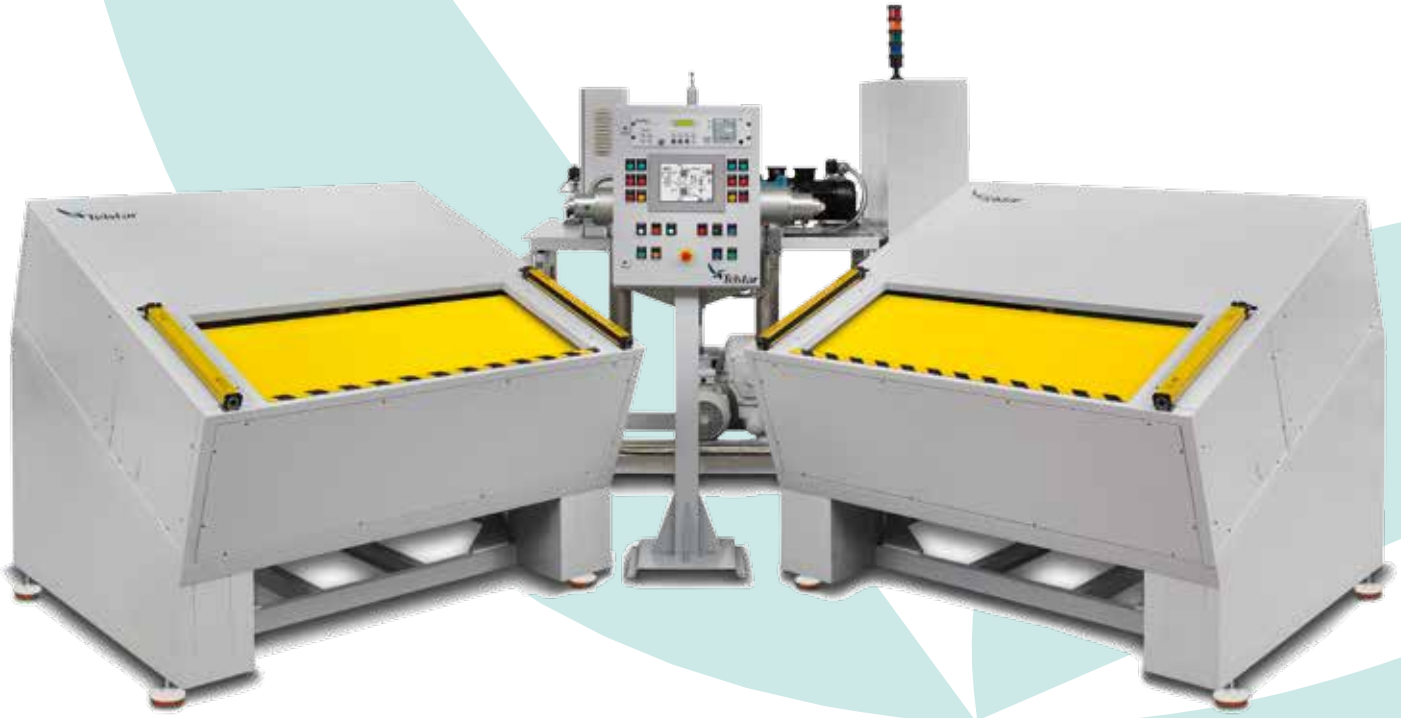

Telstar Helium Leak Testing Systems

Telstar Helium Leak Testing systems are based on more than 50 years experience in design and production of Vacuum Equipment. Our technical expertise and flexibility allowed us to provide solutions to the most demanding applications in terms of maximum allowable leak and cycle time.

The standard method consists in placing the part under test inside a vacuum chamber and pressurizing the part with Helium. A specially designed mass spectrometer detects the Helium in the chamber if the part under test is leaking.

Other tests can be done when required: presure decay test, flow test, filling the part with special gases after the test, ...

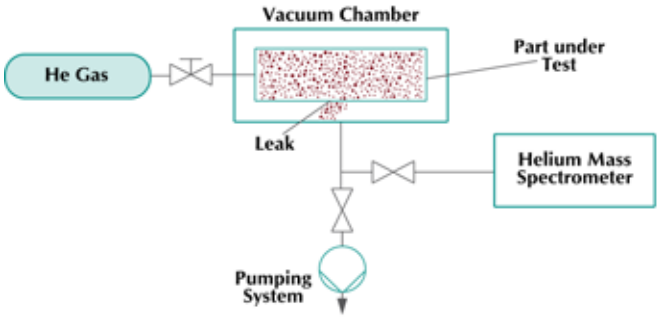

Simplified Helium Leak Detection Schematic

Why Helium?

Helium is chosen as the tracer gas for several reasons:

- Non poisonous.
- Non combustible.
- Non explosive.
- Non condensable in the range of application.
- Thermally stable.
- Inert.
- Very low background (only 5ppm in air)
- Second smallest gas particle after hydrogen.
- Clearly separable in the mass spectrometry.
- Reasonably cost effective.

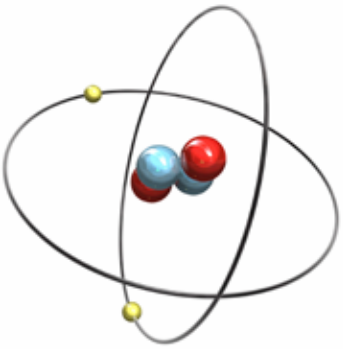



Industrial Applications

Ensuring the integrity of manufactured parts has become essential in many industrial processes today. Helium Leak Testing is proven as the only reliable leak detection method when trying to find very small leaks below 10^{-4} mbar • l / s.

Additionally, Helium Testing is the method of choice when extremely fast cycle times are required or when complete automation is needed because human mistake is not acceptable.



Double Chamber Helium Leak Testing System

Integral Test

Our Helium Leak Testers perform what is known as integral test. The test is able to distinguish between a correct (tight) and an incorrect (leaking) part, irrespectively the leak or leaks location.
The main advantages are:

- User independent method
- Overall leak rate is measured, avoiding multiple individual leaks which are correct one by one but faulty when their effects are added up.

If the part needs to be recovered for corrective action, the exact location of the leak can be found by using an optional sniffer probe module or an independent portable leak detector.



Single Chamber Helium Leak Testing System

Our advantages

Compact and ergonomic System, minimizing footprint while keeping complete access to the components for maintenance.
Productivity, optimized cycle time, single or multiple chamber configuration.
Precision, down to 10-8 mbar • l / s maximum allowable leak.
Automation, door opening and closing, part loading and unloading, automatic bar code reader and printer.
Reliable test, operator independent, automatic verification and calibration.
Flexibility, small and automated configuration adapted to customer's needs, from small valves to bulky high voltage switchgears.

Industry	Typical Maximum Allowable Leak	Typical Cycle Time
Automotive: • A/C Hoses • Heat Exchangers • Condensers • Evaporators • Fuel Tanks • Diesel Pumps • Aluminum wheel rims	10^{-5}–10^{-6} mbar • l/s	20s - 60s
Energy • SF6 isolated switchgears • Vacuum Tubes	10^{-6}–10^{-8} mbar • l/s	5 -10 minutes
Refrigeration • Evaporators • Condensers • Hermetic compressors	10^{-5}–10^{-6} mbar • l/s	20s
Others: • Instrumentation • Drums • Fire Extinguishers		

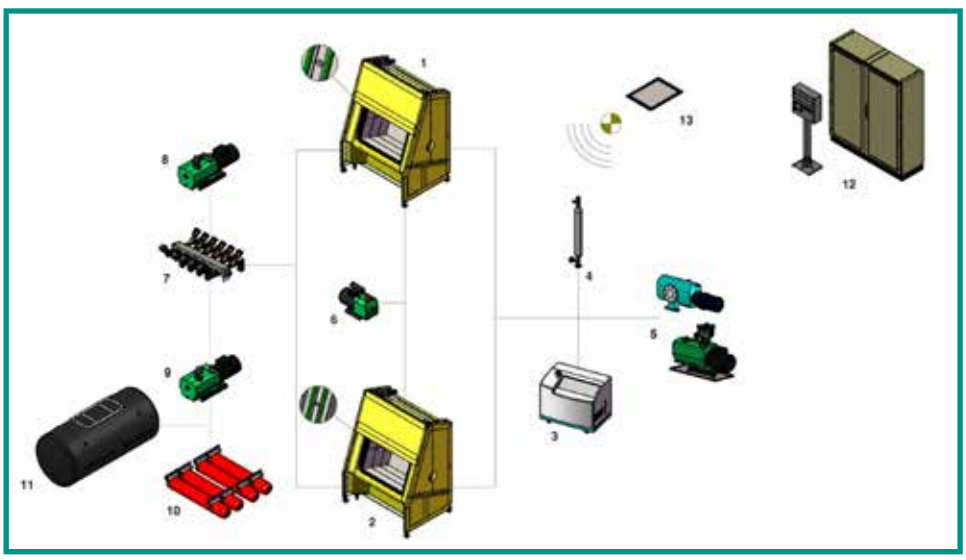

1. Vacuum Test Chamber
2. Double Test Chamber (optional)
3. Leak Detector
4. Calibrated Leak
5. Vacuum Chamber Pumpset
6. Interseal Vacuum Pump
7. Gas Management System
8. Part Pumpset
9. Helium Recovery Pumpset (optional)
10. Helium Economizer (optional)
11. Helium Recovery System (optional)
12. Control System
13. Remote control (optional)

Control System

Our machines are controlled by state of the art PLC especially configured to comply with customer's process requirements. The PLC allows automatic operation including visual and audio signs, alarms, emergency buttons and automatic data storage. It also allows manual control of the system and modification of process parameters and recopies through the touch screen and LeakStar user's interface.

LeakStar®

Our supervision and control software LeakStar® is simple, accurate and easy-to-use. It enables inspection of the whole working cycle through a touch screen panel.
Main screen displays many important parameters as cycle status, test result, chamber pressure, and other customized variables as percentage of good parts during the run. Additionally, the operator can navigate through a series of screens (password protected) to perform different actions as launch a calibration, access counters and maintenance schedule, modify or select recipes, generate reports and others.

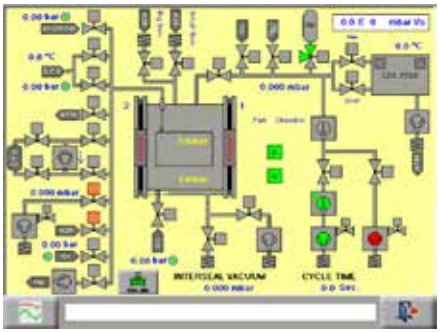

HeliStar®

SCADA system is an application running on a personal computer that provides control, supervision and data acquisition over all variables and parameters involved in the operation. The system also allows a high level of traceability of the process through the saved data.

Helium Recovery

Helium costs are increasing rapidly and its recovery is becoming more and more interesting.

Telstar Helium Recovery System consists on a Helium compressor plus a low pressure storage flexible volume and a high pressure storage vessel. The system can be complemented with a Helium concentration monitor, to measure the purity of the gas and a dryer that removes any moisture the gas can collect.

Telstar Helium Recovery Systems are very efficient (higher than 95% He recovery rate).

If your He consumption does not justify the acquisition of a recovery system, Telstar offers an intermediate solution: the 'Helium economizer'. Please contact us for additional details.



Helium Recovery System

Telstar
Vacuum solutions

ISO 9001: Certified Company

BR-LEAK-DETECTION-SYSTEMS-EN-0913
Telstar reserves the right to improvements and specification changes without notice.

SPAIN
Headquarters
Av. Font i Sagué, 55
08227 Terrassa (Spain)
T +34 937 361 600
F +34 937 861 380

Santibáñez de Béjar, 3
08042 Madrid
T +34 913 717 790
F +34 913 717 791

NORTH AMERICA
1504 Grundy's Lane
Bristol PA 19007
T +1 (215) 826 0770
F +1 (215) 826 0222

JAPAN
Azbil Corporation
Tokyo Building,
2-7-3 Marunouchi, Chiyoda-ku,
Tokyo 100-6419,
T +81 3 6810 1000
F +81 3 5220 7270

CHINA
No. 30 Jin Wen Road,
Zu Qiao Airport Industrial Park,
Pudong District
201323 Shangai
T +86 21 58 093 731
F +86 21 58 092 857

www.telstar.com
telstar@telstar.com