TRANSFORMER SELECTION GUIDE FOR SIEMENS TELECOM ICs

Pulse
INTELLIGENT SOLUTIONS

IU-3



SC





BH



AN

- Transformers, hybrids and common mode chokes specifically matched to Siemens transceiver ICs
- Applications include ISDN-BRI S and U interfaces, ISDN-PRI/T1/E1 and ISDN U_{PO}
- Safety agency approvals for most models
- Surface mount and through hole models

Transformer Selection Guide

IC Chip	Application	Ratio	THT Single	THT 3KV Single	THT Vertical Package	THT Dual	SMT Single	SMT Dual	SMT Ext Temp Dual
PEB 2080	ISDN-S	1:2	PE-64995	PE-68995	PE-68975	PE-65495	–	PE-65795	–
PEB 2081	ISDN-S/T	1:2	PE-64995	PE-68995	PE-68975	PE-65495	–	PE-65795	–
PEB 2084	ISDN-S/T	1:2	PE-64995	PE-68995	PE-68975	PE-65495	–	PE-65795	–
PEB 2085	ISDN-S	1:2	PE-64995	PE-68995	PE-68975	PE-65495	–	PE-65795	–
PEB 2086	ISDN-S	1:2	PE-64995	PE-68995	PE-68975	PE-65495	–	PE-65795	–
PSB 2186	ISDN-S/T	1:2	PE-64995	PE-68995	PE-68975	PE-65495	–	PE-65795	–
PEB 2091	ISDN-U	1.65:1	PE-65575	PE-68669	–	–	–	–	–
PEB 2091	ISDN-U	Echo Cancellation	PE-36005	–	–	–	PE-36005W	–	–
PEB 2095	ISDN-U_{P0}	1.25:1	PE-65378	–	–	–	PE-68616	–	–
PSB 2196	ISDN-U_{pn}	2:1	–	–	–	–	PE-68617	–	–
PEB 2254	T1/CEPT/PRI	1CT:1.41CT	–	PE-68788	–	–		PE-68786	PE-68887

TABLE A: Packaging Information

Package	Type	Part Weight	Parts/Tube	Parts/Tray	Parts/Reel	Reel Diameter	Tape Width	Pitch
LA	SMT	2 grams	30	60	250	13 inches	24 mm	24 mm
PA-2	SMT	4 grams	35	–	150	13 inches	32 mm	24 mm
SC	SMT	7 grams	20	50	150	13 inches	44 mm	24 mm
SH-3	SMT	0.2 grams	60	–	1500	13 inches	16 mm	12 mm
SH-4	SMT	0.3 grams	25	–	1500	13 inches	24 mm	12 mm
BH	SMT	1 gram	40	–	600	13 inches	24 mm	12 mm
AN	SMT	4.0 grams	30	–	250	13 inches	32 mm	24 mm
DP-14SM	SMT	1.5 grams	25	–	–	–	–	–
DP-14TH	THT	1.5 grams	25	–	–	–	–	–
ID	THT	7 grams	20	–	–	–	–	–
IN	THT	2.5 grams	35	–	–	–	–	–
IS	THT	4 grams	35	–	–	–	–	–
VC	THT	3.5 grams	40	–	–	–	–	–
WD	THT	9 grams	25	–	–	–	–	–
HC	THT	1.2 grams	60	–	–	–	–	–
IU-3	THT	14 grams	–	45	–	–	–	–

T1/CEPT/ISDN-PRI TRANSFORMERS

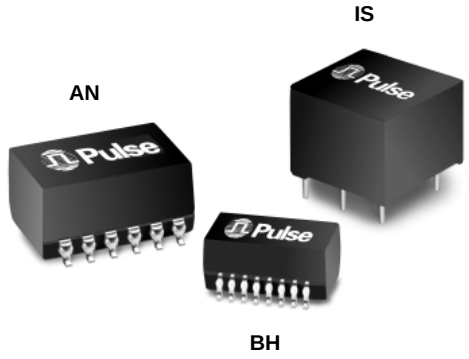

- Characteristics matched to Siemens transceiver chips
- Dual and single models available
- Extended and standard temperature range models available
- Surface mount and through hole models

Part Number	Type	Mounting	Turns Ratio	Inductance	Operating Temp Range	Isolation Voltage	Package	Data Sheet
PE-68786	Dual Xfmr	SMT	1CT:1.41CT&1CT:1.41CT	1.0 mH MIN	0°C to +70°C	1500 Vrms	BH	T608
PE-68887	Dual Xfmr	SMT	1CT:1.41CT&1CT:1.41CT	0.8 mH MIN	-40°C to +85°C	1500 Vrms	AN	T608
PE-68788	Single Xfmr	THT	1CT:1.41CT	1.2 mH MIN	-40°C to +85°C	3000 Vrms	IS	T608

TYPICAL T1/CEPT APPLICATION

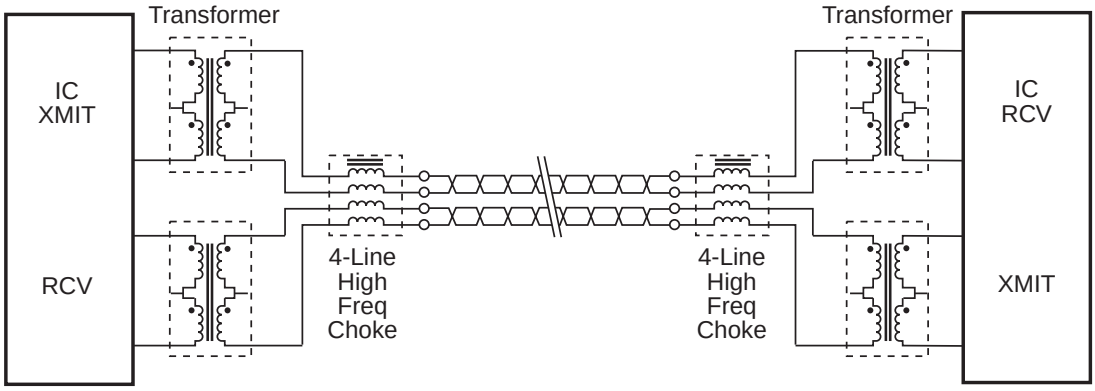

COMMON MODE CHOKES

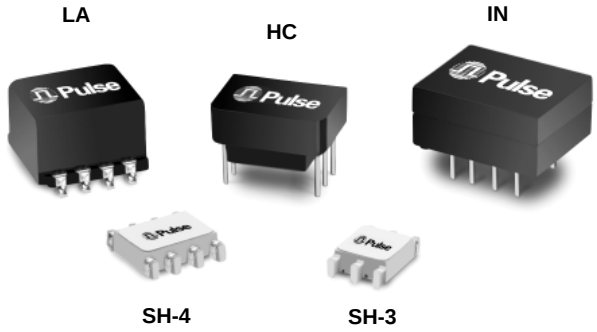

- Designed for 2-wire and 4-wire digital links
- Models for EMI reduction and improving balance in ISDN S applications
- Low frequency models effective from 100 KHz to 50 MHz
- High frequency models effective from 1 MHz to 300 MHz

ISDN S-INTERFACE TRANSFORMERS

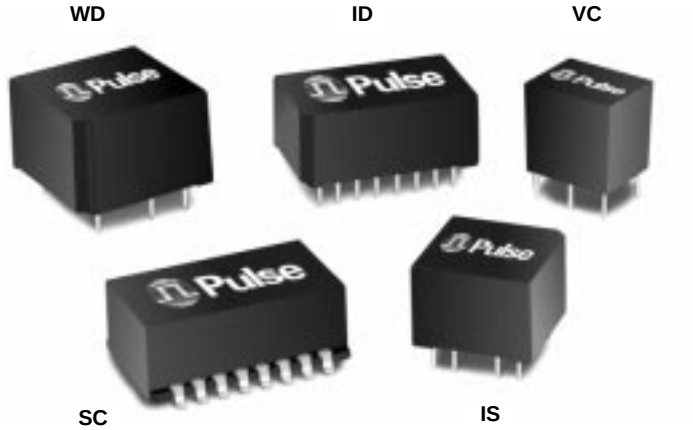

- Characteristics matched to Siemens transceiver chips
- Designed to meet layer 1 requirements of ITU I.430
- Safety agency approvals per EN 41003/ EN 60950 and UL 1459
- Excellent longitudinal balance

Part Number	Type	Mounting	Turns Ratio	Inductance	ΔI_{DC} MAX	Isolation Voltage	Package	Data Sheet
PE-64995	Single Xfmr	THT-Horz	1CT:2CT	22 mH MIN	1 mA	2000 Vrms	IS	T604
PE-65495	Dual Xfmr	THT-Horz	1CS:2CS & 1CS:2CS	22 mH MIN	1 mA	2000 Vrms	ID	T604
PE-65795	Dual Xfmr	SMT-Horz	1CS:2CS & 1CS:2CS	22 mH MIN	1 mA	2000 Vrms	SC	T604
PE-68975	Single Xfmr	THT-Vert	1CS:2	22 mH MIN	1 mA	2000 Vrms	VC	T609
PE-68995	Single Xfmr	THT-Horz	1CS:2	22 mH MIN	5 mA	3000 Vrms	WD	T604

TYPICAL ISDN S-INTERFACE APPLICATION

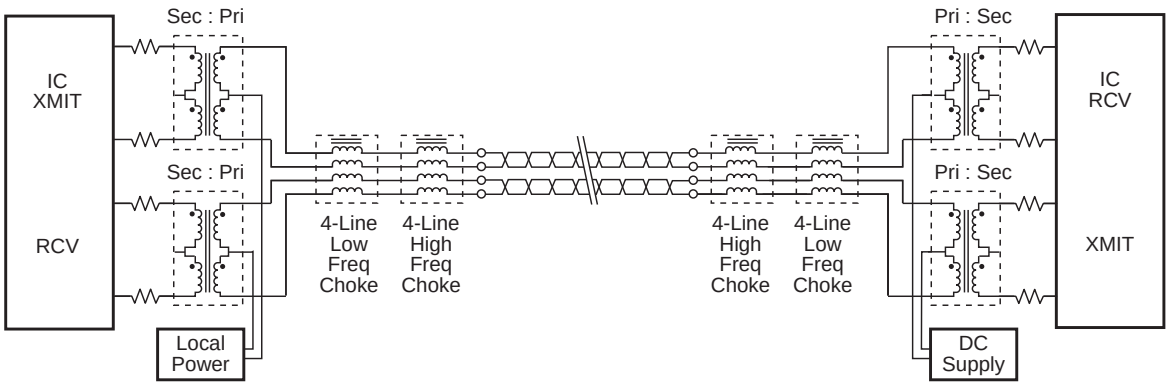

Common Mode Chokes

Part Number	Number of Lines	Mounting	Inductance	Peak Common Mode Attentuation	Application	Isolation Voltage	Package	Data Sheet
Low Frequency Chokes								
PE-65853	4-Line	SMT	4.7 mH ±30%	1 MHz	Improve Balance	500 Vrms	PA-2	T604
PE-65950	4-Line	THT-Horz	4.7 mH ±30%	1 MHz	Improve Balance	500 Vrms	IS	T604
PE-68613	4-Line	THT-Vert	4.7 mH ±30%	1 MHz	Improve Balance	500 Vrms	VC	T604
High Frequency Chokes								
PE-65554	4-Line	THT	24 µH MIN	30 MHz	EMI Reduction	500 Vrms	IN	T604
PE-65854	4-Line	SMT	47 µH MIN	30 MHz	EMI Reduction	500 Vrms	SH-4	T604
PE-65857	4-Line	SMT	22.5 µH MIN	30 MHz	EMI Reduction	500 Vrms	LA	T604
PE-65944	2-Line	THT	24 µH MIN	30 MHz	EMI Reduction	500 Vrms	HC	G002
PE-68624	2-Line	SMT	47 µH MIN	30 MHz	EMI Reduction	500 Vrms	SH-3	G002

ISDN U-INTERFACE TRANSFORMERS

IU-3

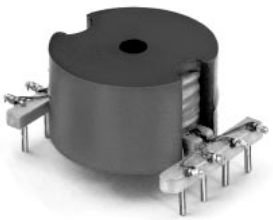

DP-14TH



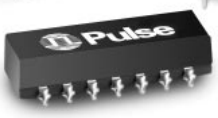

DP-14SM

- For ISDN U-Interface 2B1Q Applications
- Characteristics matched to Siemens transceiver chips
- Meets key parameters of ANSI T1-601-1992
- Space savings Echo Cancellation Hybrid available

Part Number	Mounting	Receive Turns Ratio	Inductance	ΔI_{DC} MAX	Isolation Voltage	Package	Data Sheet
PE-65575	THT	1.65CS:1CT	13 mH-18 mH	50 mA	2000 Vrms	IU-3	T603
PE-68669	THT	1.65CS:1CT	13 mH-18 mH	50 mA	3000 Vrms	IU-3	T603

Part Number	Type	Mounting	Package	Data Sheet
PE-36005	Echo Cancellation Hybrid	THT	DP-14 TH	T603
PE-36005W	Echo Cancellation Hybrid	SMT	DP-14 SM	T603

TYPICAL ISDN U-INTERFACE APPLICATION

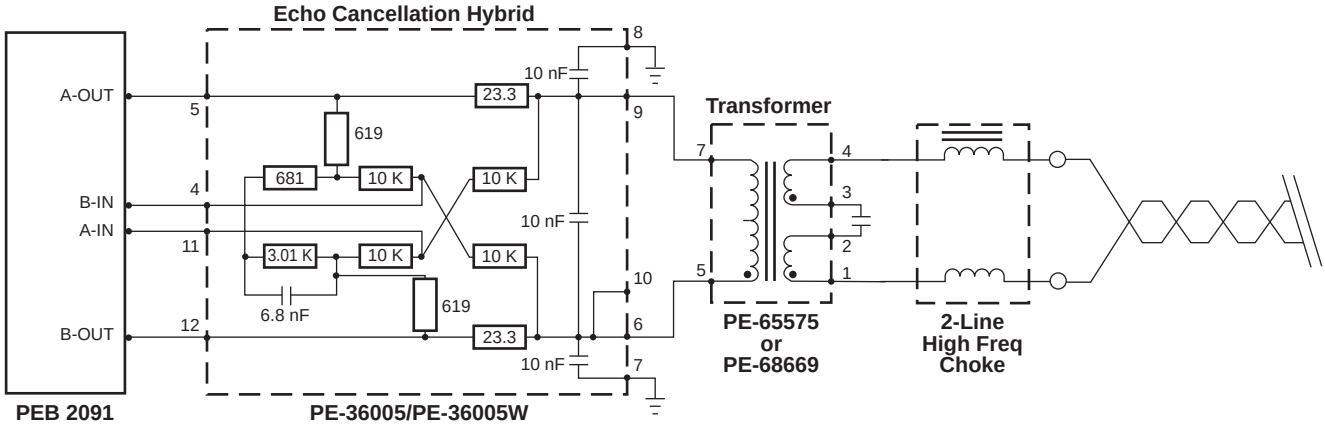

Notes

1. The purpose of the T609 data sheet is to serve as a selection guide for Pulse products matched to Siemens telecom transceiver chips. For complete electrical, mechanical and safety information, request the data sheet listed next to the part number. The data sheets can be requested through any Pulse location worldwide, authorized distributors, the WEB site or through the "Quick-Facts" system. Please see the back page for more information.
2. In this catalog, turns ratio is expressed as "primary:secondary". The term "CT" designates a center tapped winding. The term "CS" designates a split center tap winding. A center tapped winding can be created by connecting two ends of a split center winding together on the printed circuit board. In ISDN S applications, the primary winding is the line side transformer winding.
3. Standard packaging for the chokes and transformers listed in this catalog is anti-static tubes. Optional anti-static tray packaging can be ordered for the surface mount SC and LA packages by adding an "R" suffix to the part number, (ie: PE-65795R). Optional tape and reel packaging can be ordered for surface mount packages by adding a "T" suffix to the part number, (ie: PE-65795T). See Table A for more information.

ISDN U_{P0} AND ISDN U_{pn} TRANSFORMERS

VC SA



PA-2

- Characteristics matched to Siemens transceiver chips
- Available in surface mount and through hole packages
- PE-68975 is electrically equivalent to PE-64995

Electrical Specifications @ 25°C — Operating Temperature 0°C to 70°C

Part Number	Type	Mounting	Turns Ratio	Inductance (mH)	DCR Pri	DCR Sec	Isolation (Vrms MIN)	ΔI_{DC} MAX	Primary Pins	Package
ISDN U_{P0} and ISDN U_{pn} Transformers										
PE-65378	Single Xfmr	THT	1.25CS:1CS	4.2 ±10%	2.9 MAX	2.4 Ω MAX	1500	80 mA	1-4	SA-1/A
PE-68616	Single Xfmr	SMT	1CS:1.25	1.7 MIN	1.6 MAX	2.4 Ω MAX	1500	60 mA	1-5	PA-2/B
PE-68617	Single Xfmr	SMT	1CS:2	1.7 MIN	4.2 MAX	8.0 Ω MAX	1500	100 mA	6-10	PA-2/C
ISDN S Transformer										
PE-68975	Single Xfmr	THT-Vert	1CS:2	22 MIN	2.5 ±25% Ω	5.0 +25% Ω	2000	1 mA	1-6	VC-1/D

Mechanicals

SA-1

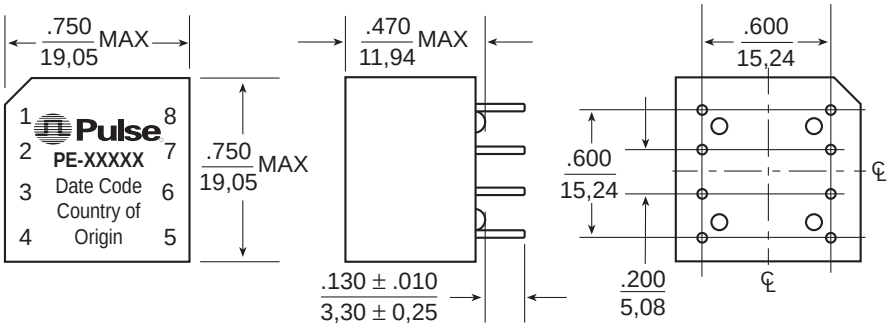

VC-1

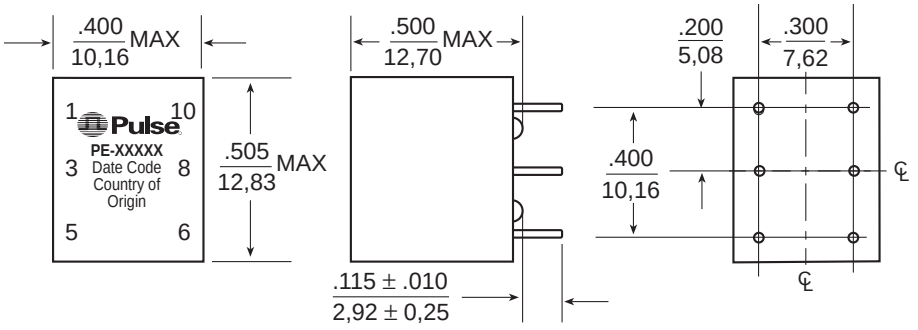

Schematics

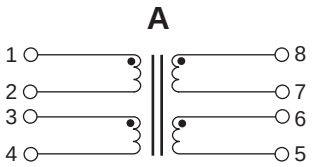

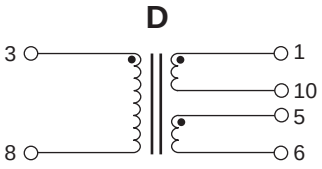

Dimensions: Inches / mm

Unless otherwise specified all tolerances are $\pm\frac{.010}{0,25}$

See page 1 for packaging information.

ISDN U_{P0} AND OTHER TRANSFORMERS

Mechanicals

PA-2

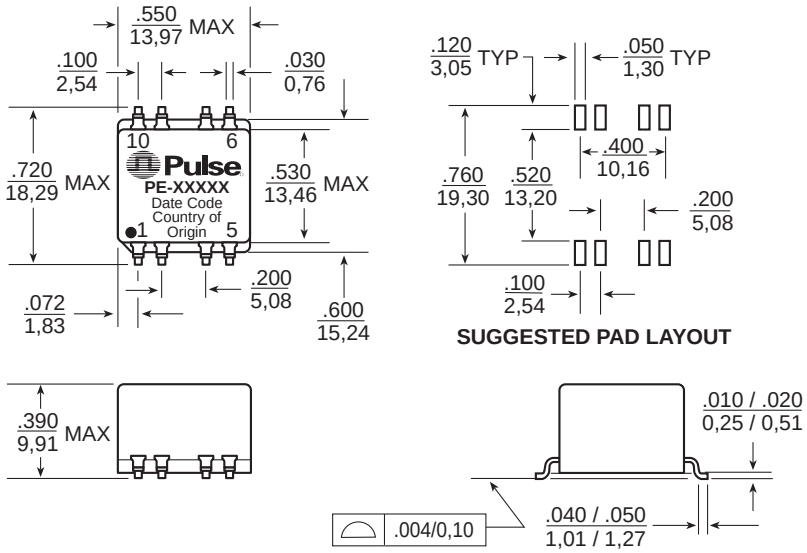

Schematics

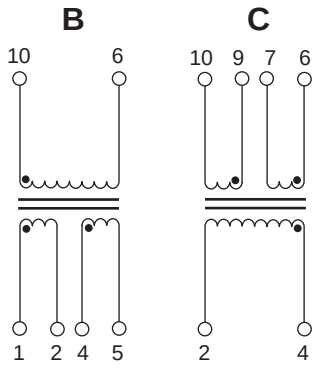

Dimensions: Inches / mm

Unless otherwise specified all tolerances are ±.010 / 0,25

See page 1 for packaging information.

Quick-Facts (U.S. Only)

To provide you with 24-hour service, Pulse has introduced **Quick-Facts,** a convenient method to fax to you the latest complete data sheets from Pulse.

Just dial: **619-674-9672**

When prompted by **Quick-Facts:**

- Enter **1001** for a menu of available documents
- Enter **1002** for the Product Index

World Wide Web

For the most current product information, please visit our web site:

http://www.pulseeng.com

For More Information :

Corporate
12220 World Trade Drive
San Diego, CA 92128
Tel: 619 674 8100
FAX: 619 674 8262
http://www.pulseeng.com
Quick Facts: 619 674 9672

Europe
Dunmore Road
Tuam
County Galway
Ireland
Tel: 353 93 24107
FAX: 353 93 24459

Asia
Block 3027
Ubi Road 1
#03-120
Singapore 408720
Tel: 65 741 5227
FAX: 65 741 3013

Distributor

Performance warranty of products offered on this data sheet is limited to the parameters specified. Data is subject to change without notice.

Printed on recycled paper. ©1996, Pulse Engineering, Inc.

Mouser Electronics

Authorized Distributor

Click to View Pricing, Inventory, Delivery & Lifecycle Information:

Pulse:
PE-68617