GERMAN by POOL

CLAGE

# Instantaneous Electric Water Heater | GPI-M6




ENVIRONMENT-FRIENDLY 環保 節水節能 energy and water saving

Online Warranty Registration

Please read these instructions and warranty information carefully before use and keep them handy for future reference.

# USER MANUAL

Printed in Germany

WH-GPI-M6-M-18(6)

# Content


| | |
|---|---|
| 1. Important notes | 03 |
| 1.1 Using the instructions | 03 |
| 1.2 Safety instructions | 03 |
| 2. Description of appliance | 06 |
| 2.1 Technical specifications | 06 |
| 2.2 Dimensions | 07 |
| 2.3 Scope of delivery | 07 |
| 3. Installation | 08 |
| 3.1 Typical installations | 08 |
| 3.1.1 Vented (open) installation | 08 |
| 3.1.2 Pressure-resistant (closed) outlet installations | 09 |
| 3.2 Installation instructions | 09 |
| 3.3 Water connection | 10 |
| 3.4 Electrical connection | 11 |
| 3.5 Initial start-up | 12 |
| 4. Use | 12 |
| 4.1 Rating plate cover | 12 |
| 4.1.1 Removing the cover | 12 |
| 4.1.2 Replacing the cover | 13 |
| 4.2 Adjusting the water flow and temperature | 13 |
| 4.3 Changing the strainer | 14 |
| 4.4 Purging | 14 |
| 4.5 Cleaning and maintenance | 14 |
| 5. Troubleshooting | 15 |
| 6. Disposal | 16 |
| 6.1 Disassembly | 16 |
| 6.2 Environment and recycling | 17 |


# 1.Important Notes

**1.1 Using the instructions**

Please read these instructions carefully before installing or using the appliance! Keep the instructions handy with the appliance for future use! These instructions are intended for the specialist who is responsible for the installation of the appliance, and for the end user.

The latest version of the instructions can be found online at www.germanpool.com.

**1.2 Safety instructions**

- Do not use the appliance until it has been correctly installed and unless it is in perfect working order.
- Do not remove the front cover under any circumstances before switching off the mains electrical supply to the unit.
- Never make technical modifications, either to the appliance itself or the electrical leads and water pipes.
- The appliance must be earthed at all times.
- Pay attention to the fact that water temperatures in excess of approx. 43°C are perceived as hot, especially by children, and may cause a feeling of burning. Please note that the fittings and taps may be very hot when the appliance has been in use for some time.
- The appliance is only suitable for domestic use and similar applications inside closed rooms, and must only be used to heat incoming water from the mains supply.
- The appliance must never be exposed to frost.
- The values stated on the rating plate must be observed.
- In case of malfunction, disconnect the fuses immediately. In case of leaks, cut off the mains water supply instantly. Repairs must only be carried out by the customer service department or an authorised professional.

# 1.Important Notes

- This appliance can be used by children aged from 3 years and above and persons with reduced physical, sensory or mental capabilities or lack of experience and knowledge if they have been given supervision or instruction concerning use of the appliance in a safe way and understand the hazards involved. Children shall not play with the appliance. Cleaning and user maintenance shall not be made by children without supervision.
- If the appliance is factory equipped with a power supply cable, it must be replaced with an original spare cable from the manufacturer in case of damage by an authorised technician in order to avoid any hazards.
- In accordance with VDE 0700, a circuit breaker with a contact opening gap of at least 3 mm for each pole must be provided on the mains side of the connecting box for appliances with a fixed connection.
- The wall bracket must be secured with the supplied screws and dowels. The appliance must be secured to the wall bracket. The appliance may only be operated if it has been properly mounted on the wall bracket.
- The prescribed nominal pressure stated on the rating plate may not be exceeded at any time.
- The required water resistance may not fall below the value stated on the rating plate at any time.
- To observe additionally for pressureless installation:
    - The water outlet behind the devices must not be blocked, and the water flow must not be restricted.
    - The water outlet facilities, jet control and other outlet unit, must be decalcified regularly. Deposits must be removed in regular intervals.
    - Only the fittings recommended by the manufacturer may be used.
    - This appliance is not suitable for warm water supply to showers.



# 1. 重要說明

**1.1 使用本說明書**

- 為安全起見，安裝產品及初次使用產品前請先細閱本說明書，並保存說明書，以便作參考之用。
- 本產品使用說明書以 www.germanpool.com 網上版為最新版本。本說明書適用於負責安裝熱水器之專業人士及熱水器用戶。

**1.2 安全指示**

- 熱水器尚未完全穩妥安裝或被確定一切操作正常之前，請勿使用熱水器。
- 在任何情況下，均勿於關掉電源前打開前蓋。
- 切勿對本熱水器(包括熱水器機體、電線或水管)進行任何技術性改動。
- 本熱水器必須接地。
- 請注意，高於43℃的水會被界定為熱水(對於兒童尤甚)，且可能導致燙傷。熱水器經使用一段時間後，配件和水龍頭的溫度可能非常高。
- 本熱水器只適宜用於家居用途，及在封閉、不結霜的室內使用，且只可用於加熱自來水。
- 切勿將本熱水器置於結霜環境下。
- 必須注意銘牌上所標籤之數值。
- 發生故障時，請立即切斷保險絲。如有漏水，應立即關掉水源，並且必須由客戶服務部或授權專業人員維修。
- 凡在有適當監督下，或已事前獲悉熱水器使用安全說明，並瞭解相關危害的前提下，3歲以上兒童及身體、感官或心理障礙者或經驗及知識不足者，亦可使用本熱水器。禁止兒童隨意操作本熱水器。禁止兒童在未經適當監督的情況下進行清潔與使用者維修保養工作。
- 如果熱水器配備的原廠電源線損壞，必須用原廠電源線並由授權之專業人員更換，以避免發生危險。
- 掛接背板必須用螺絲和壁塞固定在牆上，然後將熱水器安裝在掛接背板上。熱水器必須正確裝妥於掛接背板，才能正常運作。
- 固定連接的熱水器，接線箱必須要有符合VDE 0700標準的斷路器，斷路器每一極的接觸開口至少要有3厘米。
- 任何時候，水壓力都不可超過銘牌上的數值。
- 任何時候，來水電阻都不可低於銘牌上的數值。
- 無壓安裝須注意以下事項：
    - 切勿堵塞熱水器後的出水管或限制水流。
    - 必須定期清潔熱水器的水管和噴水調節器，清除堆積的污物和水垢，以免影響熱水器功能。
    - 必須使用生產商指定的配件。
    - 本熱水器並不適合連接花灑設備。

# 2. Description of Appliance

This instantaneous electric water heater is intended to provide the economical heating of water sufficient for a single outlet, i.e. handwash basin, and is installed together with a sanitary water fitting.

When the hot water tap is opened, the instantaneous electric water heater switches itself on automatically and heats the water as it passes through the appliance. It is only then that the appliance uses electricity. The temperature increase depends on the flow rate.

**2.1 Technical specifications**

| | |
|---|---|
| Model | GPI-M6 |
| Energy efficiency class | A# |
| Capacity | 0.2 l |
| Rated pressure | 1 MPa / 10 bar |
| Minimum resistance of the water at 15 °C | 1100 Ω cm |
| Maximum water inlet temperature | 20 °C |
| Supply voltage | 1~ / N / PE 220 V AC |
| Nominal power rating | 6.0 kW |
| Nominal current | 27.3 A |
| Hot water flow rate at Δt = 25 K 1) | 3.4 l/min |
| Switching on at | 2.2 l/min |
| Minimum required cable size | 4.0 mm² 2) |
| Approx. weight (filled with water) | 1.5 kg |
| Product dimensions (Height × Width × Depth) | 13.5 × 18.6 × 8.7 cm |
| Connecting type | pressure resistant / pressureless |
| Heating system | IES® Bare wire heating system |
| VDE approv. / Protec. class | VDE / IP25 |

#) The declaration complies with the preliminary requirements of the EU regulation No 812/2013.
1) The specific resistance can be asked for at your water distribution company.
2) Temperature increase from e. g. 15 °C to 40 °C.

- Specifications are subject to change without prior notice.
- If there is any inconsistency or ambiguity between the Chinese version and the English version, the English version shall prevail.
- Refer to www.germanpool.com for the most up-to-date version of the User Manual.
- Under normal working conditions, incoming pressure should not exceed 0.6 MPa. Otherwise, a separate pressure control device is necessary.
- When incoming water pressure exceeds 0.6 MPa, German Pool will not provide any repair service until a pressure control device is installed.



# 2. Description of Appliance

**2.2 Dimensions**

Dimensions: mm

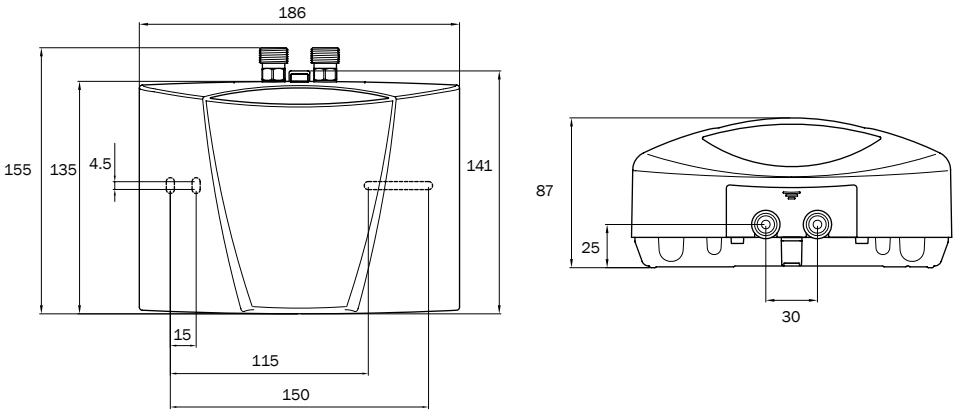


**2.3 Scope of delivery**

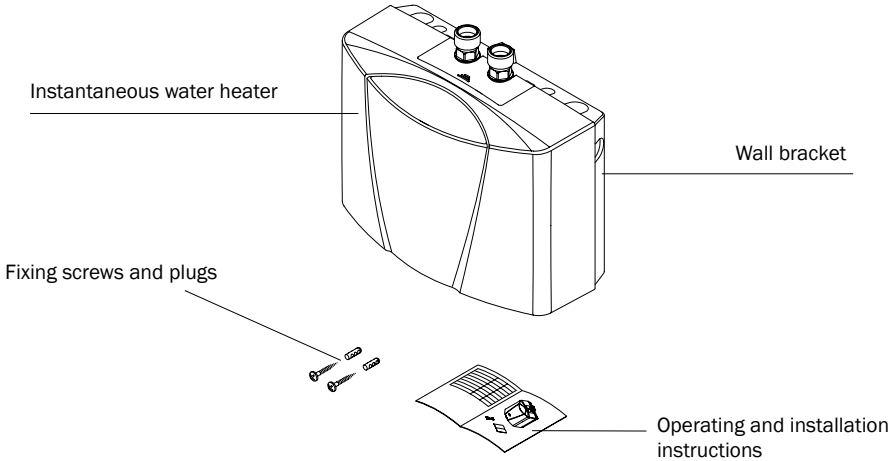

# 3.Installation

Installation, initial operation and maintenance of this appliance must only be conducted by an authorised professional, who will then be responsible for adherence to applicable standards and installation regulations. We assume no liability for any damages caused by failure to observe these instructions!

3.1 Typical installations

3.1.1 Vented (open) installation

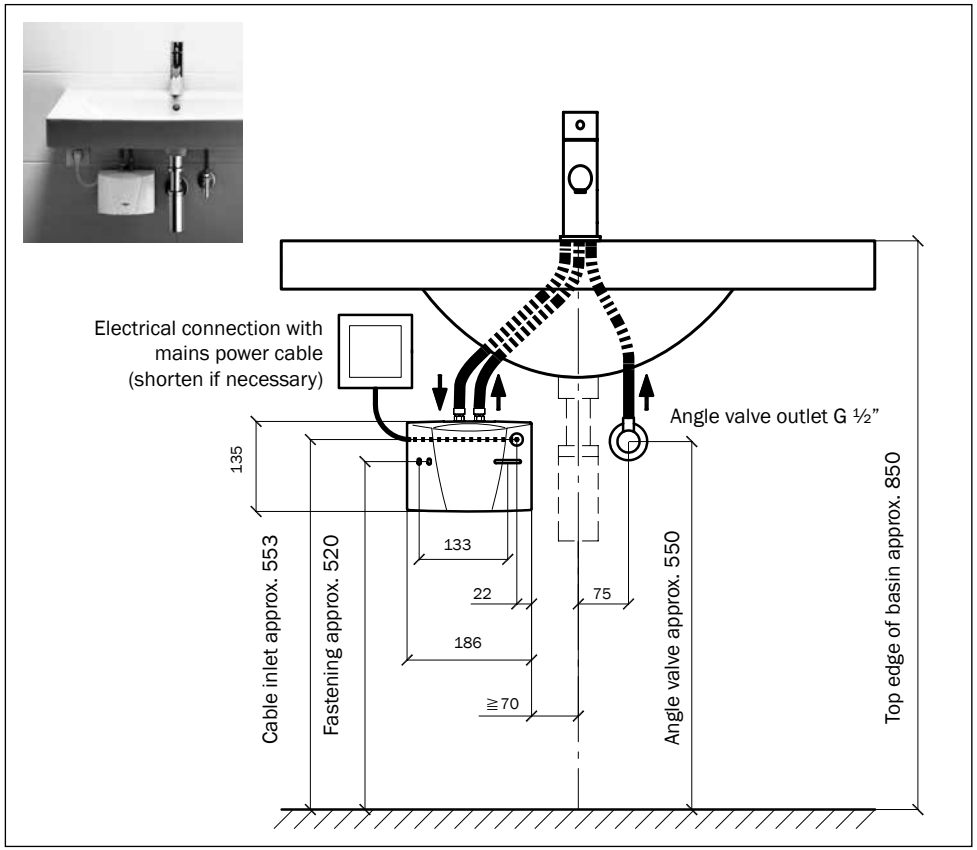


"Vented (open) installation with a special open-outlet tap" (dimensions in mm)



# 3.Installation

**3.1.2 Pressure-resistant (closed) outlet installations**

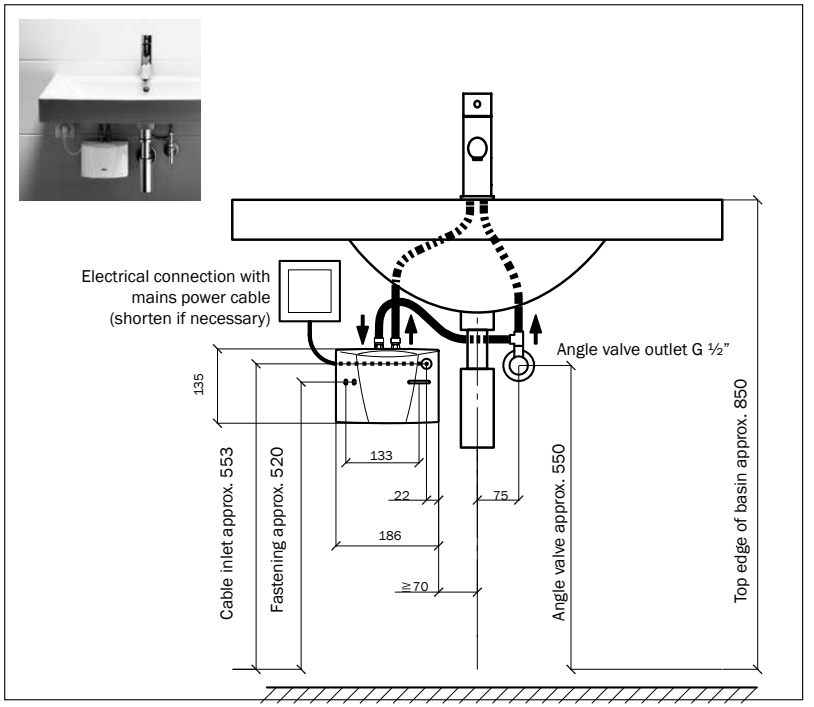


"Pressure-resistant (closed) installation with standard tap" (dimensions in mm)

**3.2 Installation instructions**
The heater is installed as shown in the immediate vicinity of the outlet in a frost-free room. We guarantee trouble-free operation only if CLAGE fittings and accessories are used.

**Note the following during installation:**
- Installation must comply with DIN VDE 0100 and EN 806 and with the statutory regulations of the country and the provisions of the local electricity and water supply company.
- Check technical data and the information on the rating plate under the cover.
- Ensure that all accessories are removed from the packing materials.
- Easy access to the appliance shall be guaranteed at all times. An external shut-off valve has to be installed.
- Thoroughly rinse the water pipes before connection.
- Optimum operation is ensured at a water flow pressure of 0.2 to 0.4 MPa (2–4 bar). The appliance must not be subjected to pressure exceeding 1 MPa (10 bar).
- For safe operation of this instantaneous water heater, a non return valve is not required. If, nevertheless, a non return valve has to be installed, it may only be placed in the hot water outlet line behind the instantaneous water heater.
- The minimum requirements for the required water resistance must be complied with. The required water resistance of the can be obtained from your water supply company.

**3.3 Water connection**

1. Position the instantaneous electric water heater with the water connectors vertically upward or downward for direct connection to the tap.
2. Secure the wall bracket to the wall with suitable screws and dowels.
3. Place the appliance onto the wall bracket and snap it into position. Only use the appliance if it is fitted correctly to the wall bracket.

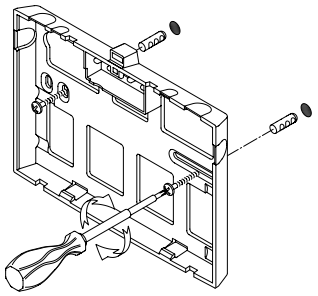

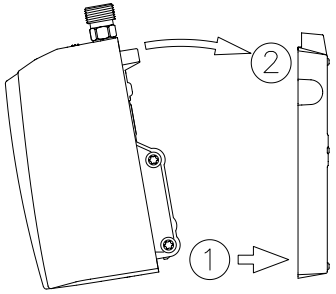


Installing the wall bracket

4. Rinse the water pipes thoroughly before connecting them to the appliance.
5. Connect the water connectors with the relevant tap connectors. The water inlet is indicated in blue on the rating plate (under the cover) and the water outlet in red.

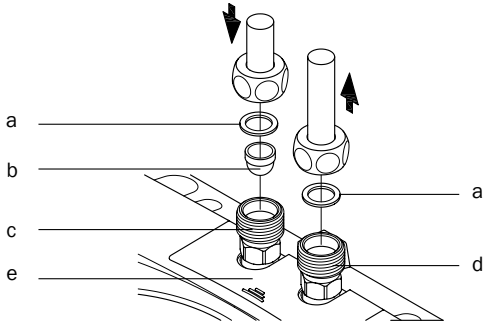


a. Seal
b. Filter
c. Cold water connection (inlet)
d. Hot water connection (outlet)
e. Rating plate cover

6. Make sure that the water pipes do not apply any kind of mechanical pressure on the instantaneous electric water heater.

7. Open the hot water valve of the tap and check all connections for leaks.

8. We commened to apply a suitable spray aerator and if necessary replace the existing old/dirty spray aerator.



# 3.Installation

**3.4 Electrical connection**

Fill the appliance with water by repeatedly opening and closing the hot water tap before connecting to electrical power and purge completely. The heating element may be damaged if this is not done!

1. Check that the power supply is switched off.

2. Make sure that the cross-section of the supply line corresponds to the details in the technical specifications of these instructions.

3. Ensure that the dimensions of the circuit breaker do correspond with the cross-section of the connecting pipe of the appliance and to the cross-section of the supply line.

4. a. Note that according to VDE 0700, an all-pole disconnecting device with a contact opening width of ≥ 3 mm per phase must be provided at the installation end.
   b. Connect the connecting pipe via a junction box to the mains, as shown in the circuit diagram.

5. Connection to a permanently installed cable:
   a. Note that according to VDE 0700, an all-pole disconnecting device with a contact opening width of ≥ 3 mm per phase should be provided at the installation end.
   b. The cross-section of the cable must meet the requirements of the minimal cross-section, as mentioned in chapter “Technical specifications“. The maximum applicable cross-section is 6 $mm^2$.
   c. Open the cover.
   d. Dismount the pre-installed connection cable.
   e. Route the permanently installed cable through the grommet and connect it as shown in the circuit diagram. Make sure that the grommet fits tightly around the cable to ensure optimal protection against water.
   f. Refit the cover on the appliance.

**The earth conductor must be connected!**

**Circuit Diagram**

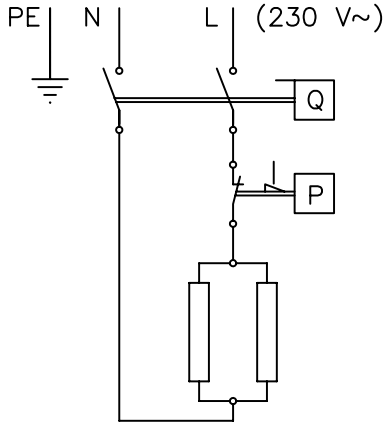

# 3.Installation

**3.5 Initial start-up**

Do not switch on the electric power at this time!

1. To purge the instantaneous water heater, open the hot water tap and wait until the water emerges free of air bubbles.
2. Switch on the electric power.
3. Adapt the water flow if necessary, if for example the temperature is not reached. The procedure is described in the chapter “Use”.
4. Explain the functions and use of the instantaneous electric water heater to the user and hand over this User Manual to the user for information and future reference.

# 4. Use

As soon as the hot water tap is opened, the instantaneous water heater switches on automatically. Close the tap and the appliance switches off automatically again.

**4.1 Rating plate cover**

On the inner part of the cover you can find the name of the application type (1), as well as the serial number (2) and the article number (3).

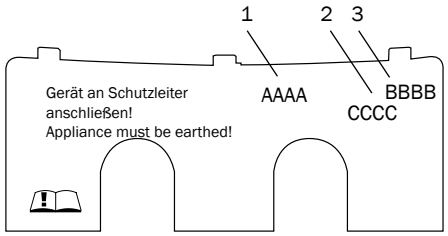


**4.1.1 Removing the cover**

Under this cover, the rating plate and the hood screw are located.

1. Push the cover at the corrugation towards the wall bracket.
2. At the rear corners press the cover down until the front edge lifts.
3. Remove the cover by pulling forward.

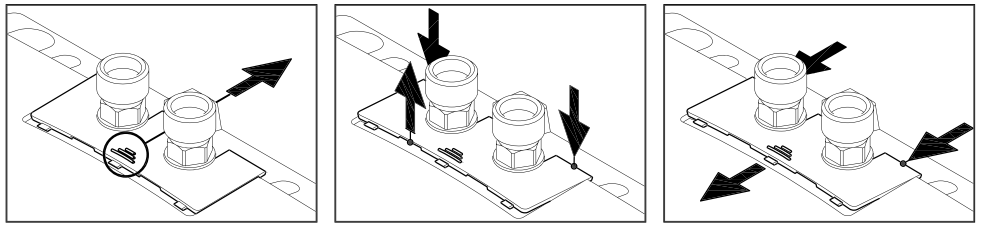



# 4. Use

**4.1.2 Replacing the cover**

1. Push the cover flat towards the wall bracket under the edges of the water connections.
2. Press down the front edge of the cover and push it forward again at the rear edge until it fits.

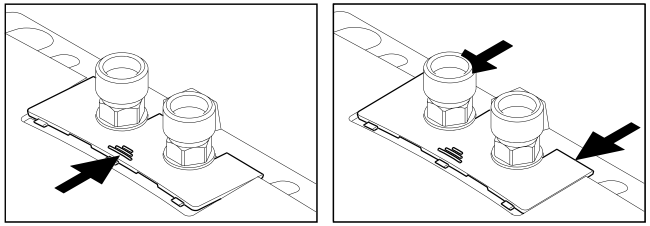

**4.2 Adjusting the water flow and temperature**

May only be carried out by a specialist.

Remove the cover, undo the hood screw underneath and remove the hood.

**Decreasing the flow rate:** Turn the adjusting screw clockwise to decrease the flow rate, thus making a higher outlet temperature possible.

**Increasing the flow rate:** Turn the adjusting screw counter-clockwise to increase the flow rate, thus reducing the possible outlet temperature.

| Direction of rotation | Flow | Temperature |
|---|---|---|
| ↑ | − | + |
| ↓ | + | − |

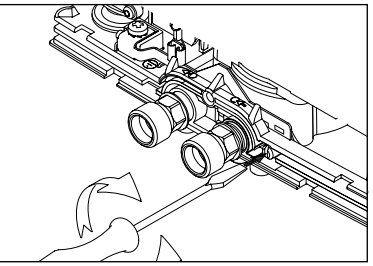

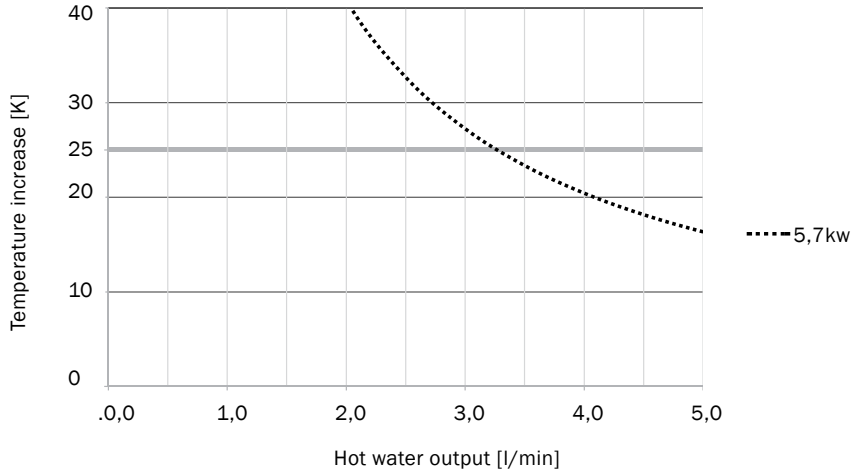

# 4. Use

**4.3 Changing the strainer**

The cold water connection of the instantaneous electric water heater is equipped with a strainer. Dirt deposited in this strainer can reduce the hot water output. Clean or replace as follows.

1. Switch off the power supply to the instantaneous electric water heater.

2. Close the shut-off valve in the inlet pipe.

3. Disconnect the water pipe from the water inlet. The water inlet is indicated in blue on the rating plate (under the cover). This can cause water leakage.

4. Lever the strainer out of the connection piece of the instantaneous electric water heater and clean or replace it.

5. Insert the clean strainer into the connection piece and connect the water pipe to the water inlet of the instantaneous electric water heater.

6. Purge the instantaneous electric water heater as described in the chapter “Purging”.

7. Switch the power supply back on again.

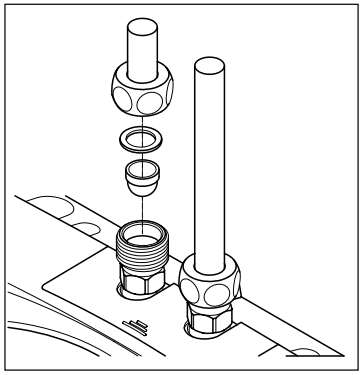

**4.4 Purging**

Each time it is emptied (for example after work on the plumbing system or following repair work on the appliance), the instantaneous electric water heater must be purged before it is used again.

1. Switch off the power supply to the instantaneous electric water heater.

2. To purge the instantaneous electric water heater, open the hot water tap and wait until the water emerges free of air bubbles.

3. Switch the power supply back on again.

**4.5 Cleaning and maintenance**

- Plastic surfaces and fittings should only be wiped with a damp cloth. Do not use abrasive or chlorine-based cleaning agents or solvents.
- For a good water supply, the outlet fittings (special tap aerators) should be unscrewed and cleaned at regular intervals. Every three years, the electrical and plumbing components should be inspected by an authorised professional in order to ensure proper functioning and operational safety at all times.



# 5. Troubleshooting

If the connection cable is damaged, it must be replaced with an original spare cable from the manufacturer by an authorised technician in order to avoid any hazards.

If you cannot rectify the fault with the aid of the troubleshooting table, please contact the customer service.

The following table will help you to determine and rectify the reasons for possible problems.

| Problem | Possible cause | Remedy |
|---|---|---|
| No water flows | Water supply is turned off | Open the main water valve and angle valve |
| Water flows more slowly than expected | Water pressure too low | Check the water flow pressure |
| | Dirt in the pipes | Remove any dirt from the filter, angle valve and tap |
| The appliance switches itself on and off | Water pressure fluctuates, flow rate is too low | Remove any dirt / increase the water flow pressure, close other taps, open angle valve further |
| Water remains cold even though the appliance switches on | Electric supply incorrect | Check the electric supply |
| | No voltage | Check fuses in the electrical installation |
| | Faulty heating element | Replace heating element (by authorised technician) |
| Appliance does not switch on and the water remains cold | Water connections mixed up | Check installation |
| | Water flow pressure too low | Check water flow setting (by authorised technician), open angle valve further, check water pressure |
| | Dirt in the pipes | Remove dirt from the inlet and outlet pipes |
| Hot water temperature varies | Water pressure fluctuates | Stabilise the water flow pressure |
| | Supply voltage varies | Check the supply voltage |
| Hot water temperature is too low | Flow rate is too high or inlet temperature is too low | Adjust the water flow (by authorised technician) |
| | Power supply is too low | Check the power supply |
| | GPI-M6:A faulty heating element | Replace heating element (by authorised technician) |

# 5. Troubleshooting

**Spare parts**
When ordering spare parts, please always specify the appliance model and serial number.

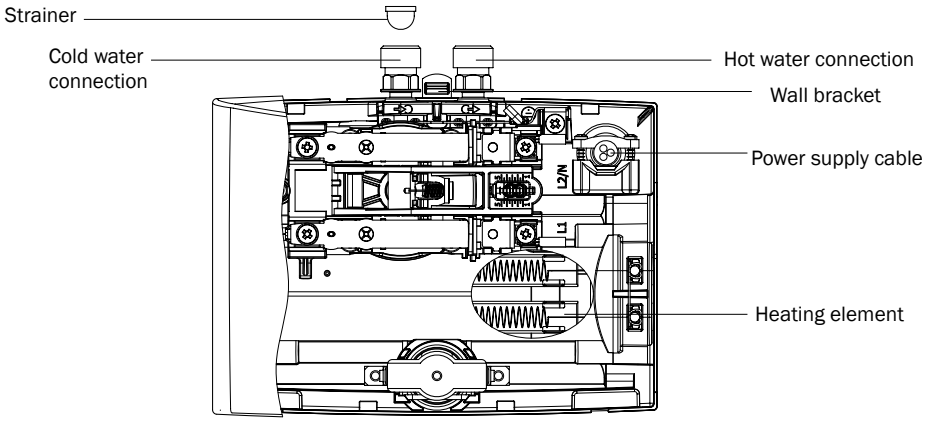


# 6. Disposal

**6.1 Disassembly**

1. Switch off the power supply to the instantaneous water heater.

2. Close the shut-off valve in the inlet pipe.

3. Disconnect the electrical connection in the appliance junction box or disconnect the protective earth plug if the appliance is fitted with a plug.

4. Disconnect the water pipes from the connectors of the appliance. This can cause water leakage.

5. Remove the appliance from the wall bracket. To do so, insert the tip of a wide screwdriver as far as it will go into the latch between the water connection pieces and push the latch slightly upwards. Tilt the appliance forward by max. 15° and remove it by lifting it upwards.

6. Unscrew the wall bracket from the wall.



# 6. Disposal

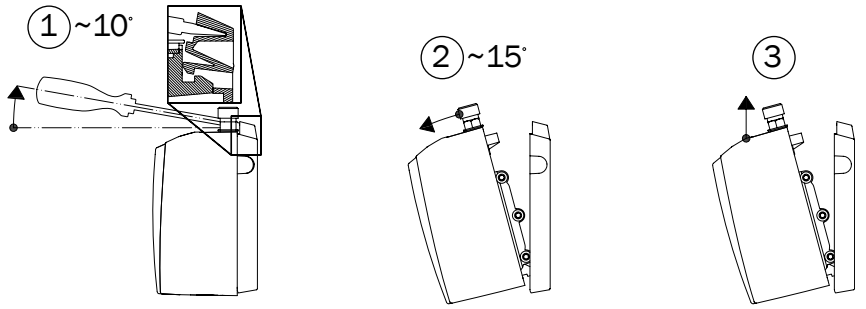


**6.2 Environment and recycling**

GERMAN POOL is conscious of the importance of environmental protection. We extend our belief to our packaging materials. You can help the environment by carefully segregating waste.

The packaging is essential for protecting the components during transportation. Electrical devices should be disposed of separately from household waste at the end of their service life. Please take this device to a collection point that accepts electronic scrap.

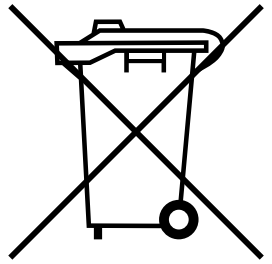

# 目錄


| | | |
|---|---|---|
| 1. | 重要說明 | 05 |
| 1.1 | 使用本說明書 | 05 |
| 1.2 | 安全指示 | 05 |
| 2. | 產品描述 | 19 |
| 2.1 | 技術規格 | 19 |
| 2.2 | 尺寸 | 20 |
| 2.3 | 包裝內容 | 20 |
| 3. | 安裝說明 | 21 |
| 3.1 | 一般安裝方式 | 21 |
| 3.1.1 | 使用特殊開口水龍頭的排氣安裝方式 | 21 |
| 3.1.2 | 使用加壓熱水器專用水龍頭的非排氣安裝方式 (封閉出水管線) | 22 |
| 3.2 | 安裝步驟說明 | 22 |
| 3.3 | 連接水管 | 23 |
| 3.4 | 連接電源線 | 24 |
| 3.5 | 初始使用 | 25 |
| 4. | 使用方式 | 25 |
| 4.1 | 銘牌外蓋 | 25 |
| 4.1.1 | 拆下外蓋 | 25 |
| 4.1.2 | 放回掩⽫ | 26 |
| 4.2 | 調整水流量及溫度 | 26 |
| 4.3 | 更換濾網 | 27 |
| 4.4 | 排氣 | 27 |
| 4.5 | 保養與維護 | 27 |
| 5 | 常見問題及疑難排解 | 28 |
| 6 | 處置 | 29 |
| 6.1 | 拆卸 | 29 |
| 6.2 | 環境與回收 | 30 |


# 2. 產品描述

在節電的大前提下，本即熱式電熱水器使用於加熱廚房水槽或洗臉槽單次使用所需水量，可與衛浴配件一同安裝。

打開熱水水龍頭後，熱水器會自動開啟並將流經熱水器的水加溫。熱水器僅於此時耗電。水溫的上升溫度取決於入水流量。

**2. 1技術規格**

| | |
|---|---|
| 型號 | GPI-M6 |
| 能源標籤 | A# |
| 額定容量 | 0.2 公升 |
| 額定壓力 | 1 MPa / 10 bar |
| 要求最低來水電阻@15℃ | 1100 Ω cm |
| 最高來水溫度 | 20°C |
| 接駁電源 | 1~ / N / PE 220 V AC |
| 額定功率 | 6.0 kW |
| 額定電流 | 27.3 A |
| 最高熱水量Δt = 25 K[1)] | 3.4公升/分 |
| 開機所需流量 | 2.2公升/分 |
| 最低電線尺寸要求 | 4.0平方毫米[2)] |
| 重量（注滿水時） | 1.5 kg |
| 產品呎吋 | 13.5 × 18.6 × 8.7 cm |
| 安裝方式 | 耐壓/無壓 |
| 加熱系統 | IES® 明線加熱系統 |
| VDE防護類型 | VDE / IP25 |

#)符合歐盟法規No. 812/2013的初步要求。
1) 有關水電阻值詳情可向水務署查詢。
2) 溫度上升，例如15–40℃。

- 產品規格及設計如有變更，恕不另行通知。
- 中英文版本如有出入，一概以英文版為准。
- 本產品使用說明書以 www.germanpool.com 網上版為最新版本。
- 正常情況下，如供水系統之來水水壓超過0. 6 MPa，用戶必須額外加裝減壓器將水壓調低。如來水壓力超過0. 6 MPa而用戶未有安裝減壓器，本公司有權拒絕為熱水器進行任何維修。

# 2. 產品描述

**2.2** 尺寸：毫米

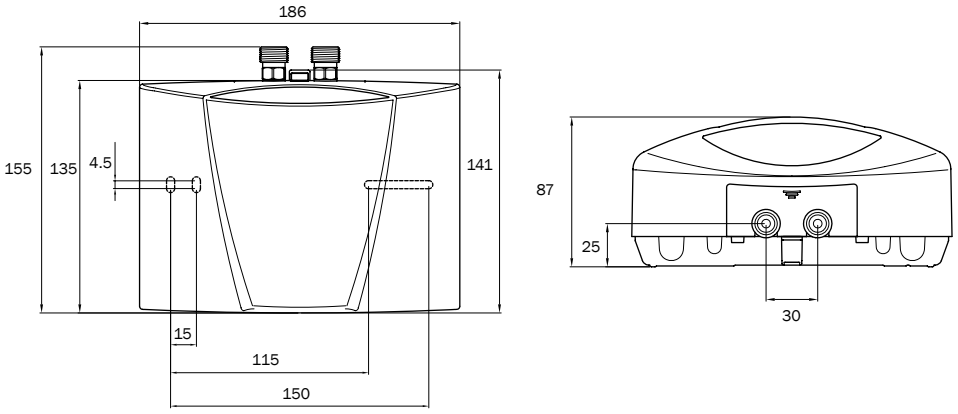


**2. 3 包裝內容**

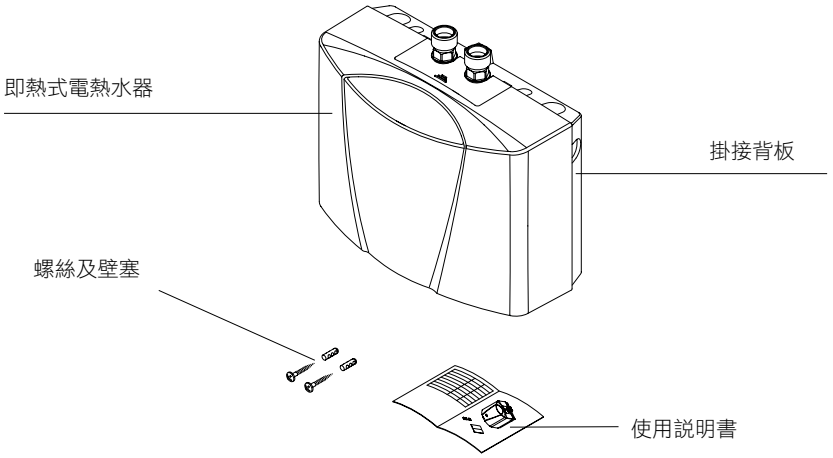




# 3. 安裝説明

本設備的安裝、初始操作和維護只能由經過授權的專業人員進行，他們將負責遵守適用的標準和安裝規定。我們對由於不遵守這些説明而導致的任何損壞概不負責。

**3. 1 一般安裝方式**

**3. 1. 1 使用特殊開口水龍頭的排氣安裝方式**

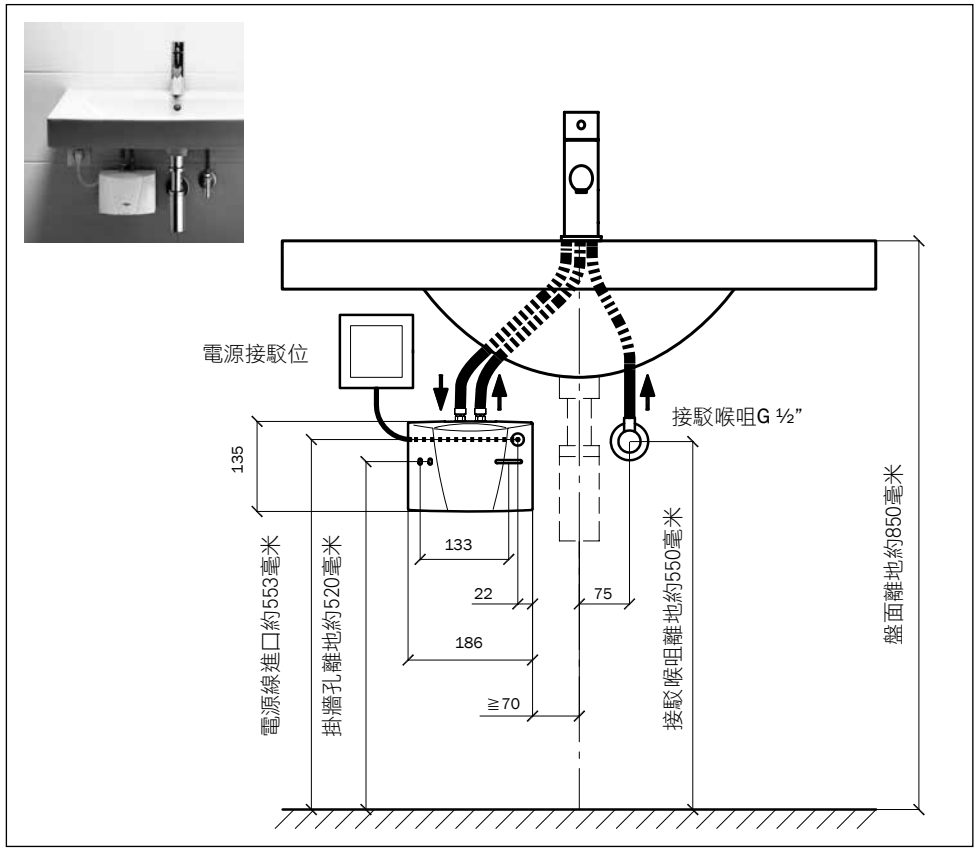


使用特殊開口水龍頭的排氣安裝方式（單位：毫米）。

### 3.1.2使用加壓熱水器專用水龍頭的非排氣安裝方式（封閉出水管線）

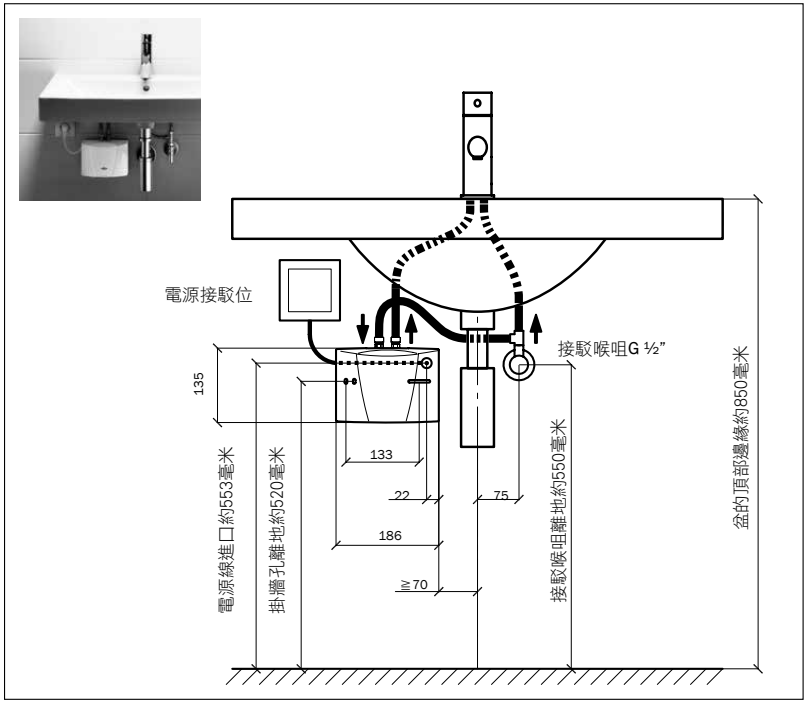


使用加壓熱水器專用水龍頭的非排氣安裝方式（封閉出水管線）（單位：毫米）。

### 3.2 安裝步驟說明

熱水器必須安裝在不結霜的室內緊鄰出水口處。唯安裝時使用Clage之原裝配件方可確保熱水器順利操作。

安裝時必須遵守下列事項：

- 按照DIN VDE 0100、EN 806及當地有關之電線安裝條例、安全標準、電力供應商或水務署之安全條例進行安裝。
- 必須注意銘牌上的技術規格。
- 確認已拆下所有配件的包裝材料。
- 請務必將熱水器安裝在容易操作的位置。並且必須安裝外接止水閥。
- 連接水管前，請以清水將水管徹底沖洗乾淨。
- 水壓介於0.2到0.4MPa(2-4bar)之間的操作效能最佳。熱水器承受力不可超過1MPa(10bar)。
- 本熱水器無需使用止逆閥也可正常運作。如安裝時需使用止逆閥，必須將其安裝在即熱式電熱水器後方的熱水出水管線中。
- 來水電阻必須符合最低要求。最低來水電阻可從供水公司查詢。





### 3.3 連接水管

1. 安裝熱水器時，供水接頭必須垂直朝上或朝下，直接連接瓷盤水龍頭。

2. 使用螺絲和尺寸適中的壁塞固定掛接背板。

3. 將熱水器置於掛接背板上，再將其卡入定位。熱水器必須正確裝妥於掛接背板，否則不可操作。

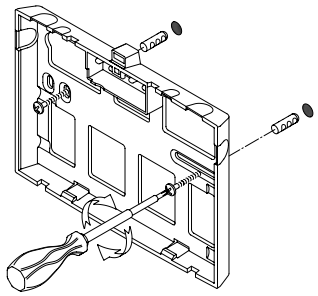

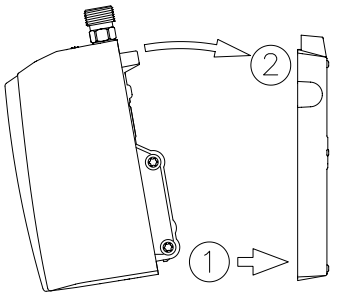


**安裝掛接背板**

4. 連接水管前，請以清水將水管徹底沖洗乾淨。

5. 連接水龍頭：冷水入水管（藍色）和熱水出水管（紅色）均標示於銘牌上（銘牌位於外蓋下方）。

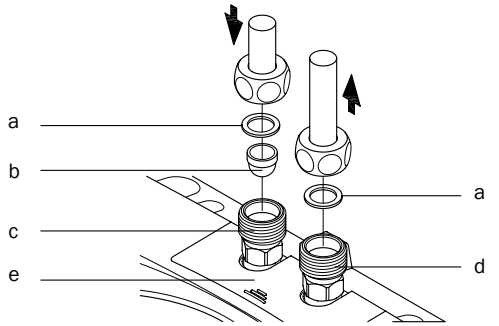


a. 密封墊
b. 濾網
c. 冷水接管（入水）
d. 熱水接管（出水）
e. 銘牌外蓋

6. 避免水管等零件對熱水器施加負重壓力。

7. 安裝完畢後，開啟熱水水龍頭，仔細檢查所有連接處是否有滲漏情形。

8. 建議安裝一個合適的噴水調節器，如有需要可替換現有老舊的調節器。

# 3. 安裝說明

### 3.4 連接電源線

接上電源前，請反覆開關熱水水龍頭，將熱水器內的空氣排出。如果未進行此步驟，可能會損壞發熱線！

1. 先確認已關閉電源。

2. 線路橫切面要符合技術規格。

3. 電源線及穿線喉管之橫切面要與斷路器同一規格。

4. a) 接線箱的電源端必須要有符合VDE 0700標準的斷路器（每一極的接觸開口至少要有3厘米）。
   b) 連接管經由接線盒連接到供電電源，如電路圖所示。

5. 連接到永久安裝電纜
   a) 接線箱的電源端必須要有符合VDE 0700標準的斷路器（每一極的接觸開口至少要有3厘米）。
   b) 電線的橫截面必須滿足最低電線尺寸要求，請查閱「技術規格」章節 。電線最高適用橫截面為6平方毫米。
   c) 打開前蓋。
   d) 卸載預先裝好之電線。
   e) 把用作永久安裝之電線穿過電線封套並把電線如電路圖所示連接。確保電線封套緊密包裹電線周圍，以達到最佳防水保護。
   f) 裝回前蓋。

**請務必接上接地線。**

**電路圖**

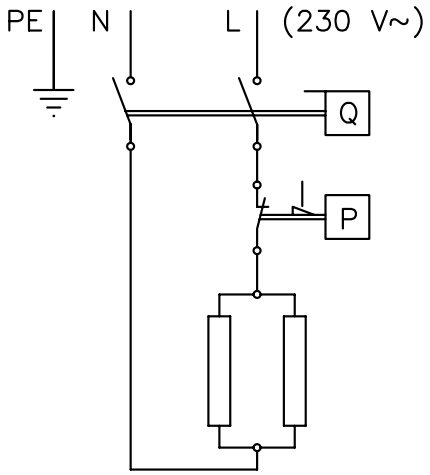




# 3. 安裝說明

### 3.5 初始使用

此時切勿打開電源！

1. 打開熱水水龍頭，讓水流出直到沒有氣泡為止。

2. 打開電源。

3. 設定所需的出水溫度，如果無法達到理想溫度或有其他問題，請調整水流量。此步驟請參閱「使用方式」章節。

4. 向使用者解釋熱水器的功能及使用方式，並將使用說明書交給用戶作日後參考之用。

# 4. 使用方式

熱水龍頭打開時，熱水器自動啟動。關閉熱水水龍頭，熱水自動關閉。

### 4.1 銘牌掩罅

掩罅內側會註明熱水器類型名稱 (1) 、序號 (2) 以及貨號 (3) 。

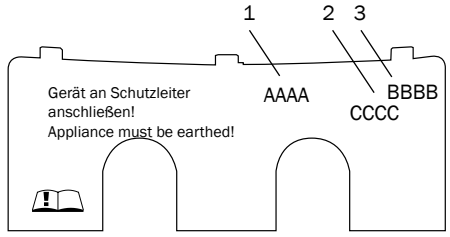


#### 4.1.1 拆下掩罅

銘牌和外蓋螺絲皆位於此掩罅內。

1. 按住皺摺處將掩罅朝掛接背板方向推。

2. 按住後方的兩個角落，將掩罅向下壓，直到前端向上翹起。

3. 向外拉出即可拆下掩罅。

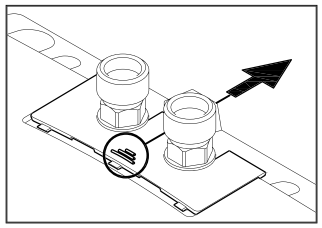

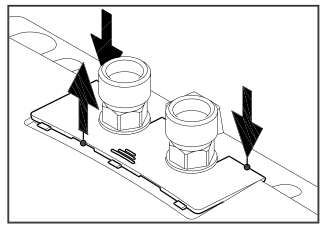

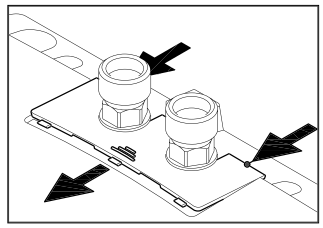

#### 4. 1. 2 放回掩口

1. 將掩口平放在供水接頭下的空位，朝掛接背板方向推。
2. 向下壓住掩口前端，將掩口推向後方的邊緣，直至掩口固定好。

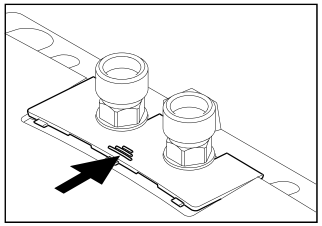

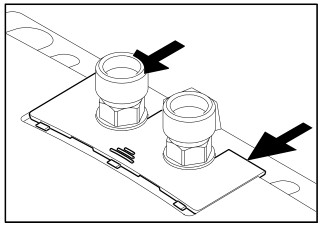

### 4. 2 調整水流量及溫度

只能由專業技工進行調整。
拆下掩口，擰開外蓋螺絲並拆下外蓋。
**將水流量調小：**順時鐘方向轉動調整螺絲可以將水流量調小，出水溫度也會變高。
**將水流量調大：**逆時鐘方向轉動調整螺絲可將水流量調大，出水溫度會降低。

| 旋轉方向 | 流量 | 溫度 |
|---|---|---|
| ↑ | − | + |
| ↓ | + | − |

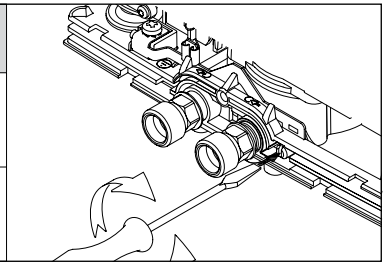

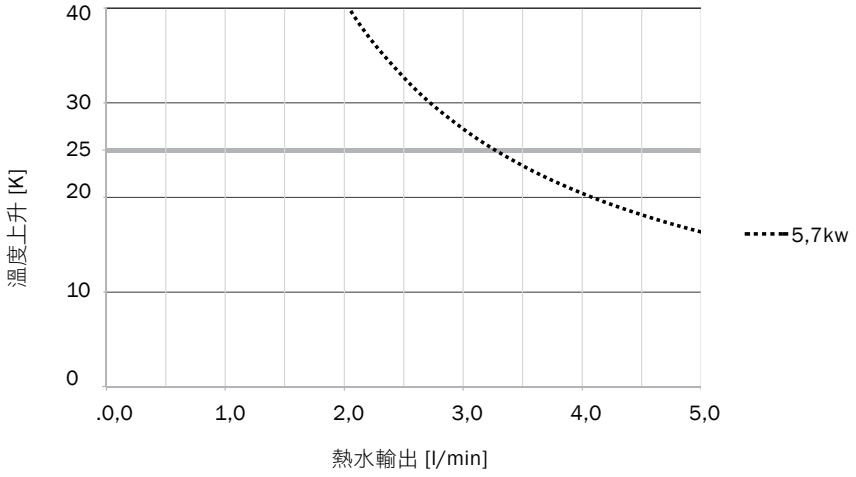




# 4. 使用方式

### 4. 3 更換濾網

即熱式電熱水器的冷水連接裝有一個濾網。濾網上之污垢積聚可能令熱水輸出減少。清洗或更換步驟如下。

1. 關閉即熱式電熱水器電源。
2. 關掉冷水入水喉內的閘制。
3. 把水喉從進水口中解開。進水口於銘牌（前蓋下）上以藍色標示。此步驟可能會導致漏水。
4. 從冷水連接件取出濾網，清潔或更換。
5. 將清潔的濾網放回冷水連接件，重新連接水管到即熱式電熱水器的入水口。
6. 根據「排氣」章節內容為熱水器排氣。
7. 再連接電源。

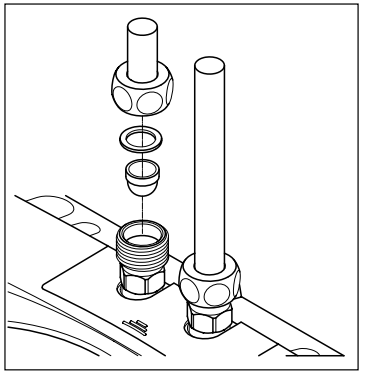

### 4. 4 排氣

為避免損壞本熱水器，第一次使用前、進行供水系統維修後或後續維修後必須先排空熱水器中的空氣，才能再度使用熱水器。

1. 關閉熱水器的電源。
2. 開關熱水水龍頭，直到水管不再排出任何空氣，而且熱水器內部的空氣全數排空為止。
3. 完成此步驟之後，才能開啟熱水器電源。

### 4. 5 保養與維護

- 請一律使用濕布擦拭本熱水器和配件。請勿使用具侵蝕作用或含氯的清潔劑或溶劑。
- 堆積在水管和熱水器中的污物和水垢會影響熱水器功能。如果水流量變小或出水時發出雜音，表示可能堆積了過多的污物和水垢。此時需請技術人員檢查熱水器，如有必要則需清潔冷水入水口的濾網。

# 5. 常見問題及疑難排解

如果電源線損壞，必須使用原廠電源線並由授權之專業人員更換，以避免發生危險。

如參閱下表後仍無法排除故障，請聯絡客戶服務及維修中心。

下表可協助您判斷發生問題的可能原因及排解問題。

| 故障 | 原因 | 解決方法 |
|---|---|---|
| 流不出水 | 供水管未打開 | 打開自來水管水閥和止水閥 |
| 水流速度低於預期 | 水壓不足 | 檢查水壓 |
| | 水管中有污物 | 清掉濾網、水閥和水龍頭的污物 |
| 熱水器開關自動啟動和關閉 | 水壓忽高忽低，水流量太低 | 清掉污物或將水壓調大，關上其他水龍頭，將止水閥開得更大 |
| 熱水器已經啟動，但水溫沒有升高 | 電源供應不正確 | 檢查電源供應 |
| | 沒有電壓 | 檢查斷路器 |
| | 發熱線損壞 | 更換發熱線（需由合格技術人員進行） |
| 熱水器沒有啟動，水溫沒有升高 | 水管連接錯誤 | 檢查入水口和出水口的安裝 |
| | 水壓不足 | 檢查水壓，檢查水流調整情形，將止水閥開得更大（需由合格技術人員進行） |
| | 水管中有污物 | 清掉濾網、水閥和水龍頭的污物 |
| 熱水溫度忽高忽低 | 流量忽高忽低 | 令流量變得穩定 |
| | 電壓不穩定 | 檢查電壓 |
| 熱水溫度太低 | 水流量太大或入水水溫過低 | 調整水量（需由合格技術人員進行） |
| | 電壓太低 | 檢查電源 |



# 5. 常見問題及疑難排解

**備用零件**

訂購備用零件時，請務必指定熱水器型號、額定功率和序號。

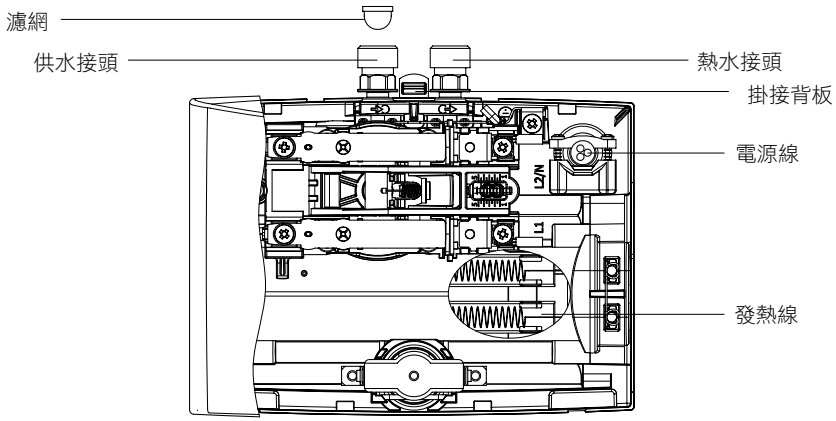


# 6. 處置

**6.1 拆卸**

1. 關閉即熱式電熱水器電源。

2. 關閉入水管的截流閥。

3. 切斷接線盒的供電電源。如熱水器帶有電源插頭，切斷保護接地插頭。

4. 把水喉從進水口中解開。此步驟可能會導致漏水。

5. 將熱水器從掛接背板取下。將平頭螺絲批子尖端插入水管連接之間的交界處，直到盡頭，輕壓螺絲批子使其朝上方翹起，將熱水器傾斜（不超過15°），朝上拆下熱水器。

6. 把掛接背板卸下。

# 6. 處置

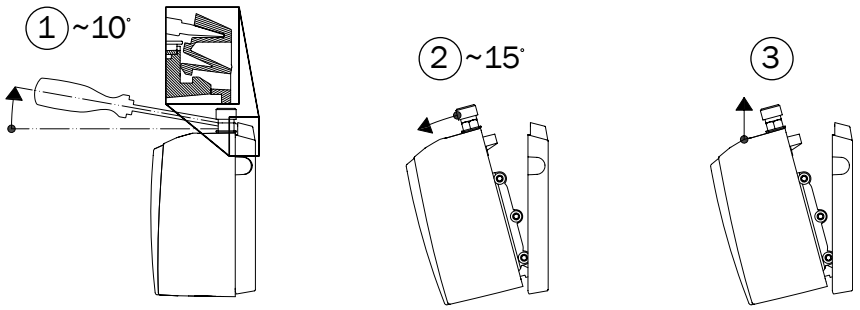


### 6. 2 環境與回收

德國寶注重環保，選用包裝物料方面亦以環保為原則。請妥善處理廢棄物以改善環境。包裝物料對保護熱水器免於運送途中受損致為重要。電器產品應在其使用壽命完結後與生活垃圾分開處理。請把這件產品棄置到電子廢料回收點。

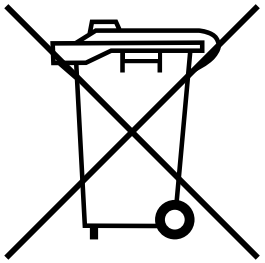



# 保用條款

此保用提供德國寶產品之機件在正常使用下壹年保用(自購買日起計算)。

* 貴戶須在購機十天內，以下列其中一種方式向本公司登記資料，保用手續方正式生效:

1) 填妥本公司網頁內之保用登記表格
**www.germanpool.com/warranty**

2) 填妥保用登記卡，郵寄至本公司。

1. 未能出示購買發票正本者，將不獲免費維修服務。
2. 用戶應依照說明書的指示操作。本保用並不包括:
   - 上門安裝、檢驗、維修或更換零件之人工以及一切運輸費用;
   - 因天然與人為意外造成的損壞 (包括運輸及其他);
   - 電源接合不當、不依說明書而錯誤或疏忽使用本機所引致之損壞。
3. 於下列情況下，用戶之保用資格將被取消:
   - 購買發票有任何非認可之刪改;
   - 產品被用作商業或工業用途;
   - 產品經非認可之技術人員改裝或加裝任何配件;
   - 機身編號被擅自塗改、破壞或刪除。
4. 總代理有權選擇維修或更換配件或其損壞部份。
5. 產品一經被轉讓，其保用即被視作無效。

## 客戶服務及維修中心

### 香港

九龍灣啟興道1-3號
九龍貨倉10樓
電話：+852 2333 6249
傳真：+852 2356 9798
電郵：repairs@germanpool.com

### 澳門

澳門俾利喇街145號
寶豐工業大廈3樓
電話：+853 2875 2699
傳真：+853 2875 2661

# Warranty Terms & Conditions

Under normal operations, the product will gurantee a 1-year full warranty provided by German Pool (effective from the date of purchase).

* This warranty is not valid until customer registration information is received by our Service Centre within 10 days of purchase via one of the following means:

1) Visit our website and register online:
**www.germanpool.com/warranty**

2) Complete all the fields on the attached Warranty Card and mail it back to our Customer Service Centre.

另請填妥以下表格並與正本發票一併保存，以便維修時核對資料。用戶提供之所有資料必須正確無誤，否則免費保用將會無效。
Please fill out the form below. This information and the original purchase invoice will be required for any repairs. Warranty will be invalidated if information provided is found to be inaccurate.

型號 Model No. : **GPI-M6**

機身號碼 Serial No. : _____ 發票號碼 Invoice No. : _____

購買商號 Purchased From : _____ 購買日期 Purchase Date : _____

1. Customer who fails to present original purchase invoice will not be eligible for free warranty service.
2. Customer should always follow the operating instructions. This warranty does not apply to:
   - labour costs for on-site installation, check-up, repair, replacement of parts and other transportation costs;
   - damages caused by accidents of any kind (including material transfer and others);
   - operating failures resulting from applying incorrect voltage, improper usage, and unauthorized installations or repairs.
3. This warranty is invalid if:
   - the purchase invoice is modified by an unauthorized party;
   - the product is used for any commercial or industrial purposes;
   - the product is repaired or modified by unauthorized personnel, or unauthorized parts are installed;
   - the serial number is modified, damaged or removed from the product.
4. German Pool will, at its discretion, repair or replace any defective part.
5. This warranty will be void if there is any transfer of ownership from the original purchaser.

## Customer Service & Repair Centre

### Hong Kong

10/F, Kowloon Godown
1-3 Kai Hing Road, Kowloon Bay,
Kowloon, Hong Kong
Tel : +852 2333 6249
Fax : +852 2356 9798
Email : repairs@germanpool.com

### Macau

3/F, Edificio Industrial Pou Fung,
145 Rua de Francisco Xavier Pereira,
Macau
Tel : +853 2875 2699
Fax : +853 2875 2661

此保用只適用於香港及澳門 | This warranty is valid only in Hong Kong and Macau

GERMAN
POOL

4 010436 918721

Subject to technical changes, design changes and errors. 保留技術更改、規格變動的權利，疏忽之處在所難免。
EN-ZHTC 91209 1872

## German Pool (Hong Kong) Limited


**Hong Kong**
Room 113. Newport Centre Phase II. 116 Ma Tau Kok Road. Tokwawan. Kowloon. Hong Kong.
Tel: +852 2773 2888
Fax:+852 2765 8215

**China**
8th, Xinxiang Road, Wusha Industrial Park, Daliang, Shunde, Foshan, Guangdong
Tel:+86 757 2980 8308
Fax:+86 757 2980 8318

**Macau**
3/F, Edificio Industrial Pou Fung,
145 Rua de Francisco Xavier Pereira, Macau
Tel:+853 2875 2699
Fax:+853 2875 2661


香港《S MARK》安全認證 2005
中國廚櫃/家電行業十大影響力品牌 2008
CEO非凡品牌大賞 2007
香港星級品牌企業獎 2015
香港工商業獎 2008
最具潛質創建品牌企業獎 2007
香港中小企業最佳拍檔大獎 2015
香港消費者推薦品牌 2014
香港《Q嘜》優質服務證書 2015
香港名牌十年成就獎 HONG KONG TOP BRAND TEN YEAR ACHIEVEMENT AWARD 2015

© All rights reserved. Copying, reproducing or using the contents of this manual is not allowed without prior authorization from German Pool, violators will be prosecuted.

www.germanpool.com