Instruction Manual



Diaphragm Valve –

pneumatically actuated

DIASTAR DN65 – DN150

GEORGE FISCHER +GF+

The technical data given in this publication are for general information purposes only. They imply no warranty of whatever kind. Please consult our General Conditions of Supply.

Table of Contents

		Page
1.	General Features	36
2.	Valve Design	36
3.	Installation Information	37
4.	Technical Data	37
	4.1 Control Pressures	37
	4.2 Control Volumes	38
	4.3 Control Diagram	38
	4.4 Pilot Valve	39
5.	Modes of Operation for Valves	40
6.	Dimensions / Weight	41
7.	Accessories	42
	7.1 Emergency Manual Override / Stroke Limiter	42
8.	Replacing the Diaphragms	44
	8.1 Removing the Sealing Diaphragm	44
	8.2 Installing the Sealing Diaphragm	44
	8.3 Control Diaphragm	45
9.	Electrical Feedback Unit	46
10.	List of Spare Parts	47

1. General Features

- The George Fischer Diaphragm Valve Type DIASTAR is safe to operate and requires little maintenance.
- Flow direction and installation position are selectable.
- The valve is mounted using threaded bushes molded into the valve body.
- The actuator is operated with a choice of control media
  – compressed air (oil-free)
  – inert gases (fluids on request)
- A variation of the operating and control pressures is possible by adjusting the spring assembly of the actuator to the actual operating conditions.
- These products are according to the Machine Guidelines 98/37/EG (former 89/392/EWG), not regarded as machines; they are, however, built into installations which are regarded as machines.

CE

Note
We distinctly emphasize that operation is prohibited until it has been confirmed that the machine (plant) into which the products have been built corresponds to the conditions of the EC Machine Guidelines 98/37/EG (former 89/392/EWG).

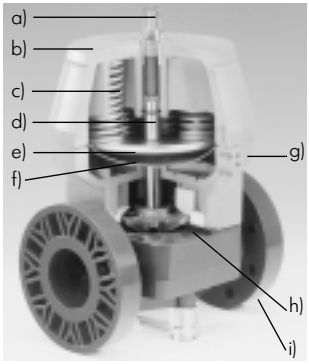

2. Valve Design

a) Visual position indicator
b) All-plastic housing of PP-GF
c) Pre-tensioned spring sets
d) Stroke spindle assembly of stainless steel
e) Diaphragm plate
f) Control diaphragm
g) NAMUR interface
h) Sealing diaphragm EPDM or PTFE
i) Valve body of PVC-U, PP or PVDF

3. Installation Information

Valves should be mounted as firmly as possible, i.e. they should be made fixed points. Any active force is then transmitted directly and not through the pipeline. The threaded sleeves on the diaphragm valve are ideal for this purpose. The diaphragm valve and the pipeline must be perfectly aligned in order to prevent excessive loads on the valve.

4. Technical Data

4.1 Control Pressures (Guidelines)

Fail safe to close (FC)

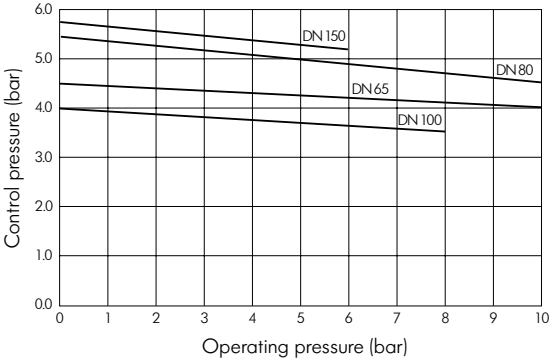

Fail safe to open/double acting (FO/DA)

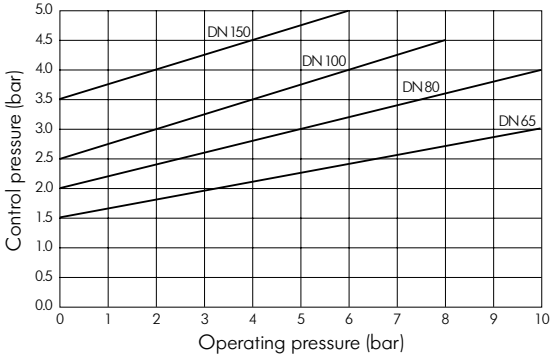

Max. allowable control pressure:

- **6 bar for mode FC**
- **5 bar for modes FO and DA**
- Lower control pressures are possible by reducing the spring force
- Control medium: inert, non-aggressive gases (control with liquids available on request)
- Temperature of control medium: max. 40 °C

4.2 Control Volumes

d mm	**DN mm**	**Mode FC dm^3**	**Mode FO dm^3**	**Mode DA dm^3**	
75.90	65.80	2.2	4.4	4.4 [1]	2.2 [2]
110.160	100.150	3.8	7.6	7.6	3.8

[1] close [2] open

4.3 Control Diagram

(For description of connections see Section 5)

Mode FC
fail safe to close

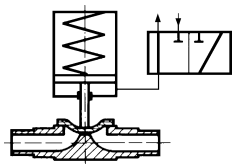

1 Solenoid valve 3/2
Connection A

Mode FO
fail safe to open

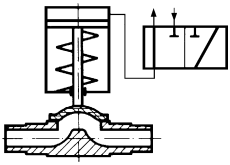

1 Solenoid valve 3/2
Connection B

Mode DA
double acting

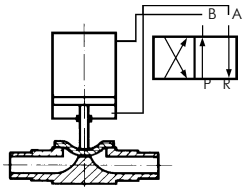

1 Solenoid valve 4/2
Connection A for open,
Connection B for close

4.4 Solenoid Pilot Valve Type PV93

General

The 3/2 way solenoid valve is for the control of single acting pneumatic actuators.
It can be mounted as required either directly on the actuator on a base plate with a banjo bolt or on a battery mounting plate with integrated snap-on mounting for 35 mm hat rails according to DIN 46247.

Method of Operation

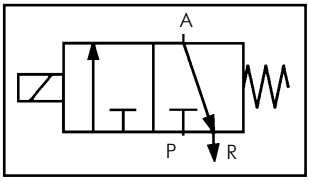

Fail safe to close;
when de-energized, output A deactivated

Direct Installation Version



Installation on Battery Mounting Plate



Detailled information can be found in our technical documentation.

5. Modes of Operation for Valves

(Fig. 1, 2, 3)

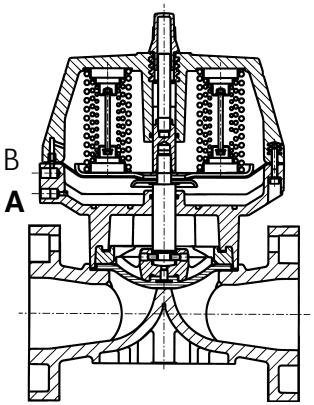

Fig. 1

Mode FC: Fail safe to close
In the de-energized state, the valve is closed via spring force (see Fig. 1).
When the control medium is admitted to the actuator **(connection A), the valve opens;** when the control medium escapes, the valve is closed via spring force.

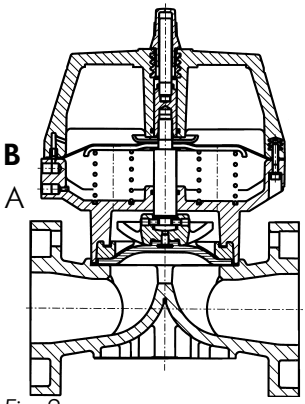

Fig. 2

Mode FO: Fail safe to open
In the de-energized state, the valve is opened via spring force (see Fig. 2).
When the control medium is admitted to the actuator **(connection B), the valve closes;** when the control medium escapes, the valve is opened via spring force.

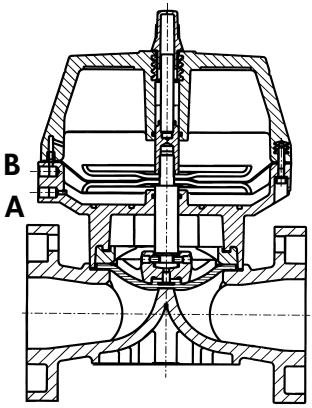

Fig. 3

Mode DA: Double acting
The valve has no defined position.
The valve is opened and closed by applying control pressure to the corresponding control connections. **(Connection A for open; connection B for close).**

6. Dimensions / Weight

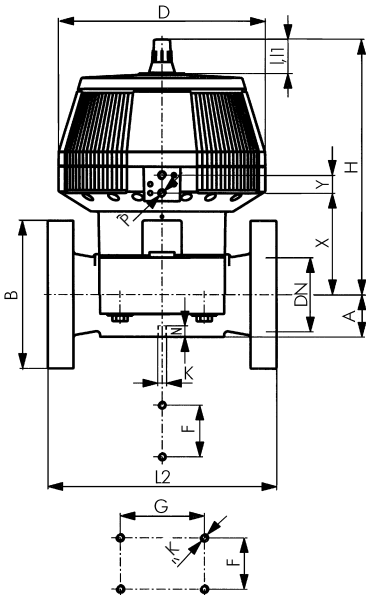

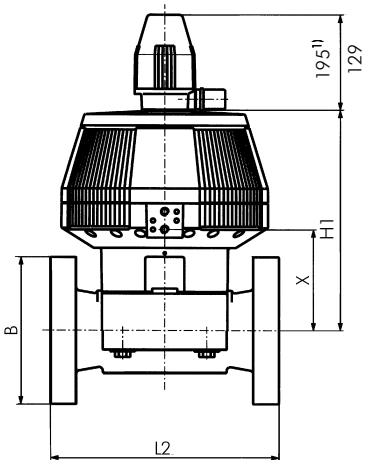

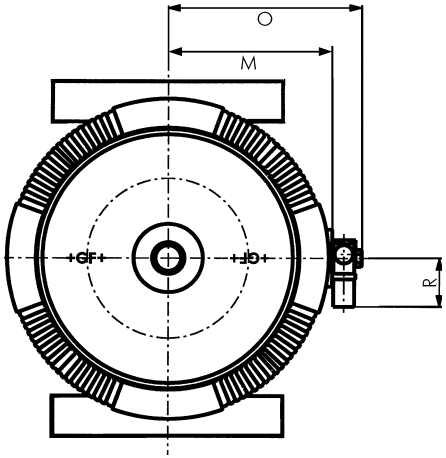

DN	Weight*/kg		
mm	PVC	PP	PVDF
65	13.6	13.7	14.2
80	17.4	16.0	18.7
100	24.7	22.8	26.5
150	35.0	33.4	38.2

* Mode FC

DN	A	B	D	F	G	H	H1	I	l1 1)	K	L2	M	N	O	P	R	X	Y
mm	mm	mm	mm	mm	mm	mm	mm	mm	mm	mm	mm	mm	mm	mm	G	mm	mm	mm
65	46	185	280	70	–	344	298	46	100	M8	290	143	15	175	1/4	60	148	24
80	57	200	280	120	–	348	302	46	100	M12	310	143	15	175	1/4	60	150	24
100	69	225	335	120	–	395	349	46	100	M12	350	170	20	202	1/4	60	176	24
150	108	285	335	100	200	455	409	46	100	M12	480	170	20	202	1/4	60	237	24

1) with stroke limiter / emergency manual override

7. Accessories

7.1 Emergency Manual Override / Stroke Limiter

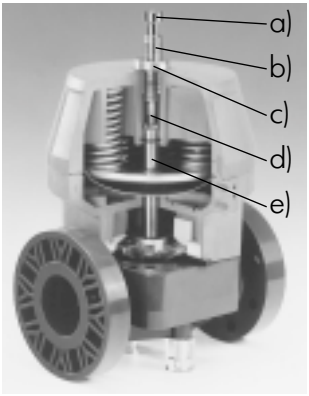

a) Visual position indicator
b) Threaded bush
c) Locknut
d) Indicator pin
e) Spindle nut

Installation and Adjustment for Full Stroke

1. Put valve in position «open» with control pressure (FC, DA).
2. Remove indicator cap and indicator pin from the basic version (see Section 2).
   Attention: indicator pin has left thread)
3. Screw threaded bush with 19 mm wrench tightly into the actuator.
4. Screw locknut on threaded bush and secure with a 41 mm wrench.
5. Guide indicator pin through threaded bush, screw into spindle nut and secure with a 6 mm Allen wrench. (Indicator pin has left thread).
6. Screw indicator cap onto locknut.

Adjustments

1. Minimum Flow Adjustment
   (DN65–DN80, FC, FO, DA)
   - Put valve in position «open» using the control medium (FC, DA).
   - Remove locknut with a 41 mm wrench and turn the threaded bush with a 19 mm wrench in a counterclockwise direction until the desired position is reached.
     The stroke limit setting can be determined by comparing the position of the threaded bush to the basic setting.
   - Tighten locknut..

2. Maximum Flow Adjustment
   (DN65–DN150, FC, FO, DA)
   - Put valve in position «closed» using the control medium.
   - Remove locknut with a 41 mm wrench and turn the threaded bush with a 19 mm wrench in a clockwise direction until the desired position is reached.
     The stroke limit setting can be determined by comparing the position of the threaded bush to the basic setting.
   - Tighten locknut.

3. Emergency Manual Override (DN65–DN80)
   The adjustment is similar to that for the stroke limiter. By turning the threaded bush in a clockwise direction, the valve is closed (FO/DA); by turning it in a counterclockwise direction, the valve is opened (FC / DA).
   For automatic operation, the valve must be reset according to the instructions in Section 7.1.

8. Replacing the Diaphragms

8.1 Removing the Sealing Diaphragm

As in any diaphragm valve, the component with the most wear and tear is the diaphragm. In addition to mechanical stress, the diaphragm is subject to wear resulting from the flow media. We urgently recommend that the diaphragm is inspected after 50,000 cycles. If the flow media is muddy or contains abrasive particles, we recommend more frequent inspections. The diaphragm can be inspected by dismantling the valve body. To this end, remove the screws attaching the base to the valve body.
Elastomer diaphragms are retained by a threaded bolt and can be removed by turning it in a counterclockwise direction.
PTFE diaphragms are equipped with a bayonet catch. To remove, rotate the diaphragm 90° in any direction and pull out.

8.2 Installing the Sealing Diaphragm

Please note:
When reattaching the valve body, the screws must be tightened crosswise so that the housing is compressed uniformly.

Proceed vice versa to 8.1. Torques: see table below.

d	DN		Torque
mm	mm	inch	Nm
75	65	2½	25
90	80	3	30
110	100	4	30
160	150	6	40

For valves with a built-in stroke limiter, we suggest that the valve is readjusted after replacing the diaphragm.

8.3 Control Diaphragms

Valves with the «fail safe to close» (FC) mode are equipped with pre-tensioned spring sets. By removing the screws on the valve body, the spring sets are relieved to such an extent that the actuator can be opened without any additional equipment.
Valves with the «fail safe to open» (FO) mode do not have any pre-tensioned spring sets, so that the actuators may only be opened by the manufacturer.
Detailled installation instructions can be found in the installation manual enclosed with every spare part set.

9. Electrical Feedback Unit Type ER53

Please request our special documentation.



Type	Type of switch	Max. switching capacity	Code No.
ER53–1	Microswitch AG, Ni	250 V ≈ / 10 A	**199 190 293**
ER53–2	Microswitch Au with gold-plated contact	4–30 V ⎓ / 1–100 mA	**199 190 297**
ER53–3	Inductive switch NPN with LED	9.6–55 V ⎓ / 0.2 A	**199 190 294**
ER53–4	Inductive switch PNP with LED	9.6–55 V ⎓ / 0.2 A	**199 190 295**
ER53–5	Inductive switch Namur	8 V ≈	**199 190 296**
ER53–6	Microswitch EExd	250 V ≈, 5 A	**199 190 298**
ER53–7	Analog position sensor	15–30 V ⎓ / 4–20 mA	**199 190 299**
	Adapter complete for ER 53		**199 190 310**

Installation

Basic Version of Valve

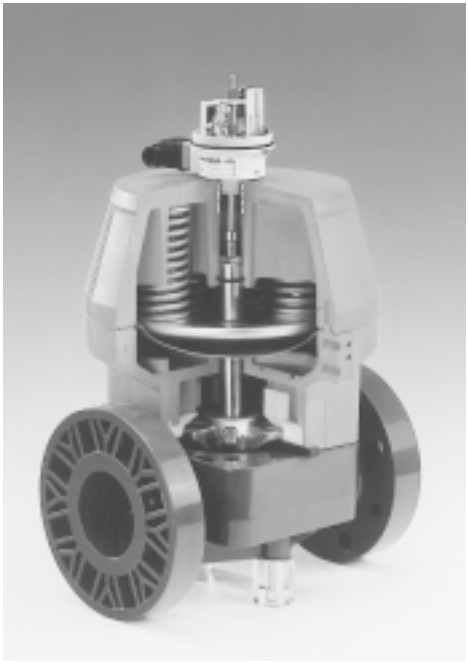

Valve with Stroke Limiter/ Emergency Manual Override

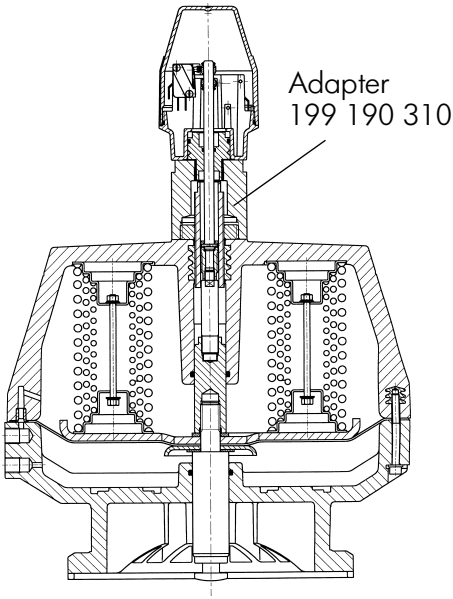

10. List of Spare Parts

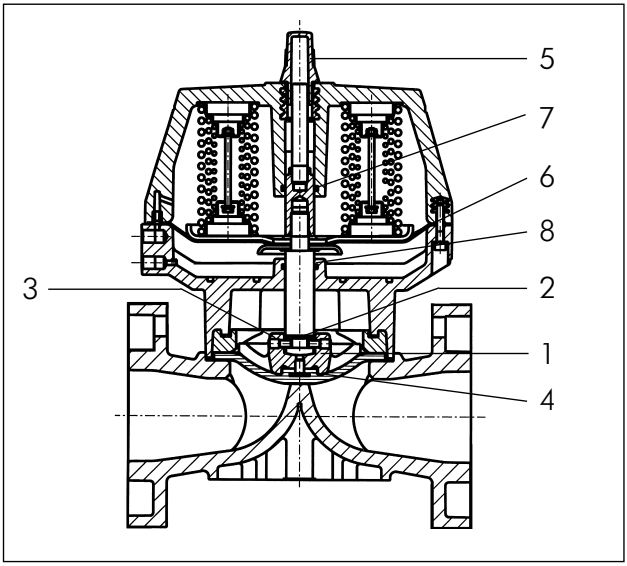

Pos.	Part	Piece	d75 DN65	d90 DN80	d110 DN100	d160 DN150
	Compression set for EPDM diaphragms, consisting of:	1	**198 000 268**	**198 000 270**	**198 000 272**	**198 000 274**
1	Compression body	1				
2	Diaphragm holder (DN65)	1				
3	Screw	2				
	Compression set for PTFE diaphragms, consisting of:	1	**198 000 269**	**198 000 271**	**198 000 273**	**198 000 275**
1	Compression body	1				
2	Diaphragm holder(DN65)	1				
3	Screw	2				
4	Diaphragms					
	EPDM		**161 481 028**	**161 481 029**	**161 481 030**	**161 482 754**
	PTFE		**161 480 240**	**161 480 241**	**161 480 242**	**161 482 760**
5	Indicator cap		**198 806 376**	**198 806 376**	**198 806 376**	**198 806 376**
6	Control diaphragms		**198 000 266**	**198 000 266**	**198 000 267**	**198 000 267**
7						
8	with seal set					

GEORG FISCHER +GF+

A Georg Fischer Rohrleitungssysteme GmbH, Sandgasse 16, 3130 Herzogenburg
Tel. +43(0)2782/8 56 43-0, Fax +43(0)2782/8 51 56, e-mail: office@georgfischer.at

AUS George Fischer Pty. Ltd., 4 Jacks Road, South Oakleigh, Victoria 3167
Tel. +61(0)3/95 63 88 99, Fax +61(0)3/95 63 89 66, e-mail: sales@georgefischer.com.au

B/L Georg Fischer NV/SA, Digue du Canal 109-111 – Vaartdijk 109-111, 1070 Bruxelles/Brüssel
Tél. +32(0)2/556 40 20, Fax +32(0)2/524 34 26, e-mail: info.be@be.piping.georgfischer.com

CH Georg Fischer Rohrleitungssysteme (Schweiz) AG, Amsler-Laffon-Strasse 1, Postfach, 8201 Schaffhausen
Tel. +41(0)52/631 30 26, Fax +41(0)52/631 28 97, e-mail: info@rohrleitungssysteme.georgfischer.ch

CHINA Georg Fischer Piping Systems Ltd. Shanghai, No. 218 Kang Qiao Dong Rd., Shanghai 201319
Tel. +86(0)21/58 13 33 33, Fax +86(0)21/58 13 33 66, e-mail: gfsro@public.shanghai.cngb.com

D Georg Fischer GmbH, Daimlerstraße 6, 73095 Albershausen
Tel. +49(0)7161/302-0, Fax +49(0)7161/302 259, e-mail: info@georgfischer.de, Internet: http://www.rls.georgfischer.de
Georg Fischer DEKA GmbH, Postfach 1145, 35228 Dautphetal, Tel. +49(0)6468/91 51-0, Fax +49(0)6468/91 52 21/22
e-mail: info@dekapipe.de

DK/IS Georg Fischer A/S, Klintehøj Vænge 17, 3460 Birkerød, Tel. +45 45 81 19 75, Fax +45 45 81 16 22

E Georg Fischer S.A., Sistemas de tuberías para la industria, Alcalá, 85, 2°, 28009 Madrid
Tel. +34(0)91/781 98 90, Fax +34(0)91/426 08 23, e-mail: info@georgfischer.es

F George Fischer S.A., 105–113, rue Charles Michels, 93208 Saint-Denis Cedex 1
Tél. +33(0)1/49 22 13 41, Fax +33(0)1/49 22 13 00, e-mail: info@georgefischer.fr

GB George Fischer Sales Limited, Paradise Way, Coventry, CV2 2ST, Tel. +44(0)2476/535 535, Fax +44(0)2476/530 450
e-mail: info@georgefischer.co.uk, Internet: http://www.georgefischer.co.uk

I Georg Fischer S.p.A., Via Sondrio 1, 20063 Cernusco S/N (MI), Tel. +3902/92 18 61, Fax +3902/92 14 07 85
e-mail: office@piping.georgfischer.it

J Kubota George Fischer Ltd., 2-47, Shikitsuhigashi, 1-chome, Naniwa-ku, Osaka 556-8601
Tel. +81(0)6/6648 25 62, Fax +81(0)6/6648 25 65, e-mail: kgf-yosi@kubota.co.jp

N Georg Fischer AS, Rudsletta 97, 1351 Rud, Tel. +47(0)67/17 17 40, Fax +47(0)67/13 92 92

NL Georg Fischer N.V., Lange Veenteweg 19, Postbus 35, 8160 AA Epe
Tel. +31(0)578/678222, Fax +31(0)578/621768, e-mail: info.vgnl@nl.piping.georgfischer.com
Internet: http://www.georgfischer.nl

PL Georg Fischer Sp. z o.o., ul. Radiowa 1A, 01-485 Warszawa, Tel. +48(0)22/638 91 39, Fax +48(0)22/638 00 94

S/FIN Georg Fischer AB, Box 113, 12523 Älvsjö-Stockholm, Tel. +46(0)8/727 47 00, Fax +46(0)8/749 23 70
e-mail: info@georgfischer.se, Internet: http://www.georgfischer.se

SGP George Fischer Pte. Ltd., 15 Kaki Bukit Road 2, KB Warehouse Complex, 417 845 Singapore/Singapore
Tel. +65(0)7/47 06 11, Fax +65(0)7/47 05 77, e-mail: info@georgfischer.com.sg

USA George Fischer Inc., 2882 Dow Avenue, Tustin, CA 92780-7285
Tel. +1(0)714/731 88 00, Toll Free 800/854 40 90, Fax +1(0)714/731 46 88
e-mail: info@us.piping.georgefischer.com, Internet: http://www.us.piping.georgefischer.com

Export Georg Fischer Rohrleitungssysteme AG, Ebnatstrasse 111, Postfach, CH-8201 Schaffhausen
Tel. +41(0)52/631 11 11, Fax +41(0)52/631 28 93/631 28 58
e-mail: export@piping.georgfischer.com, Internet: http://www.piping.georgfischer.com

198.150.537
Fi 1961/1,2,4g (3.01) 2000

© Georg Fischer Rohrleitungssysteme AG, CH-8201 Schaffhausen/Schweiz, 1996

Printed in Switzerland