Amphenol

Industrial Operations

Amphenol Technology (Zhuhai) Co., LTD.

ePower-lite 两芯三芯插头连接器
装配作业指导书
The Cable Assembly Work Instruction
For ePower-lite 2&3ports Plug Connector

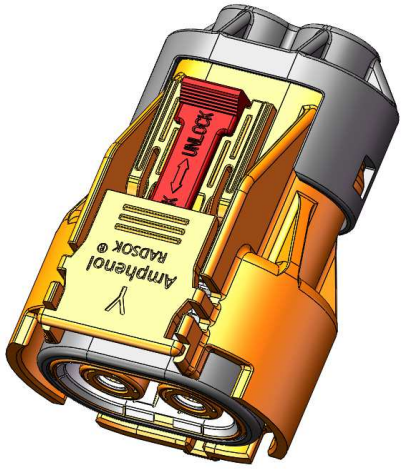

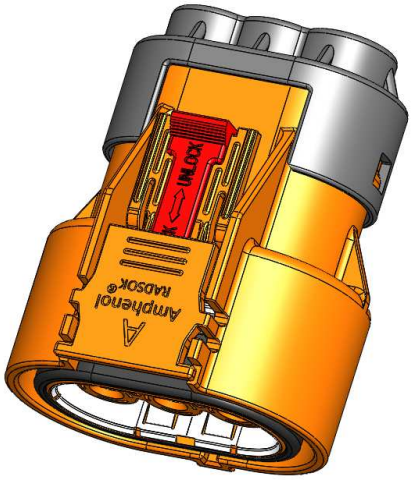

Revision	Description	Issue Date
A	Initial release	2016/03/10
B	Change the assembly method of shielding	2017/02/13
C	Update the crimping tool of power pin	2017/06/27
D	Update the picture of crimping contact	2017/09/27
E	Modify Collar assembly	2018/08/28

Amphenol Technology (Zhuhai) Co., LTD
No.63, Xinghan Road, Sanzao Town, Jinwan, Zhuhai, PRC, 519040
http://www.amphenol-industrial.com

1. 包装清单 Package contents：

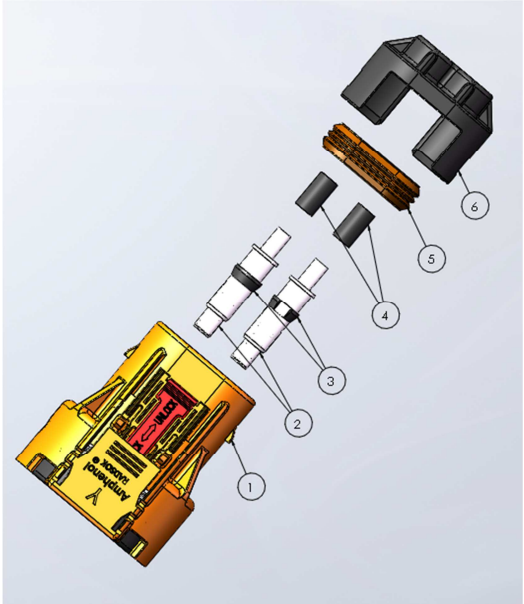

①： 插头壳体组件 Plug Shell assembly

②： 端子组件 Socket contact assembly

③： 卡扣 Collar

④： 热缩套管 Heat shrink tubing

⑤： 尾部密封圈 Grommet

⑥： 尾部连接盖 Adapter

2. 推荐屏蔽线缆规格Recommended shielded wire specification

线缆规格Wire size	线缆外径Wire OD(mm)	推荐压接后端子最小拔出力 Recommended Min. Pullout force(N)
2.5mm^2	5.2±0.2	200
4.0mm^2	5.8±0.2	270
6.0mm^2	6.7±0.3	450
10.0mm^2	8.6±0.3	500

3. 组装步骤 Assemble steps：

步骤1: 2.5 mm² /3 mm² /4 mm² /6 mm² / 10 mm² 屏蔽线的裁剪和剥皮

Step 1: 2.5 mm² /3 mm² /4 mm² /6 mm² / 10 mm² shielded wire cutting and stripping the jacket



Iteam 类型	2 Ports (Include all cable sizes) 两芯（全部的线径）	3 Ports (Include all cable sizes) 三芯（全部的线径）
L	15±0.5mm	16±0.5mm

步骤2: 去除铝箔，把屏蔽网拧成一股，按尺寸裁剪绝缘层。

Step 2: Strip out Al-malar, twist the braid together, and strip out insulation as below dimension.



步骤3: 将线缆插入端子孔内并压接

Step 3: Insert conductor into hole of socket and crimping use right crimping tool



推荐如下压接工具 Recommended Crimping tool as below：



步骤4: 将热缩管装在端子与线压接的地方

Step 4: Install heat shrink tubing to the area where crimping contact and wire



Amphenol P/N: CH54F-003-09A

安费诺料号：CH54F-003-09A

工具 Tooling：

如图所示热风枪Heat gun as picture show.



热缩管规格推荐 Recommend Heat Shrink Tubing spec.:

- 带有热熔胶
  With hot melt adhesive
- 良好的密封性和绝缘性能
  Excellent sealing and insulation properties
- 收缩比：3:1
  Shrink ratio: 3:1
- 工作温度：-55~125℃
  Operating temperature: -55~125℃

注意 Notes：

不能让热缩管覆盖住屏蔽线

Don’t let the shrink tubing cover the braid wire

步骤5: 装上卡扣

Step5: Install collar



步骤6: 把压线后的端子插入插头组件中, 端子上的卡爪固定端子于孔内, 同时屏蔽网搭接屏蔽层表面

Step 6: Insert the contact with cable assembled into the plug shell, the collar snapped into the shoulder of the hole, and braid contact the shielding surface.

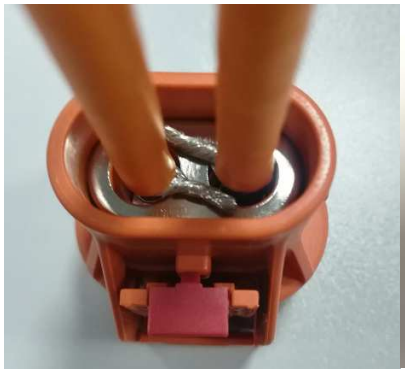

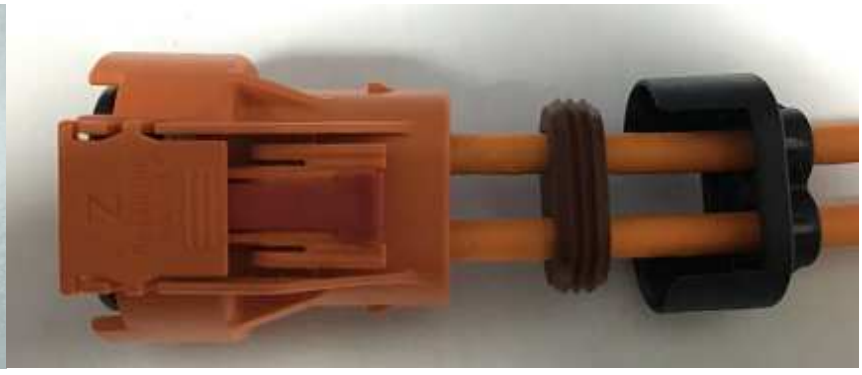

步骤7: 装尾部密封圈

Step 7: Install the grommet

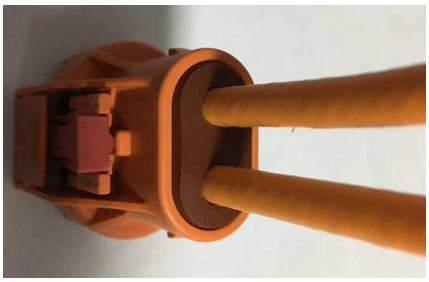

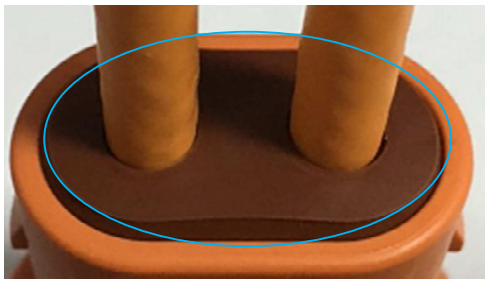

屏蔽网贴着塑胶壳内壁或者露出塑胶壳是不允许的。

The shielding braid adjoin the inside of plastic housing or come out of plastic housing is not allowed(may cause "leakage".)

步骤8: 装尾部连接盖

Step 8: Install the adapter



注意 Notes:

在线缆装好后需要做绝缘电阻和耐压测试

Need to do Insulation Resistance and DWV test after cable assembly

绝缘电阻测试：1000V DC, 500MΩ Min, 60s

Insulation Resistance test: 1000V DC, 500MΩ Min, 60s

耐压测试：3000V AC, 漏电流≤5mA, 60s

DWV test: 3000V AC, leakage current ≤5mA, 60s