x950 Series

Expandable 10G/40G/100G Stackable Layer 3+ Switches

Allied Telesis x950 Series switches are ideal for the modern enterprise network core, where stacking creates a resilient local or distributed solution. These powerful switches support 100 Gigabit connectivity, and provide the capacity that today's Smart City and IoT networks need.

x950 Series switches feature a high-performing 1.92 Terabit fabric, to eliminate bottlenecks and effortlessly forward all traffic.

x950 switches feature 24 or 48 x 1/10 Gigabit SFP+ ports, or 24 or 48 x 1/2.5/5/10 Gigabit copper ports to enable flexible deployment, while 4 x built-in 40G/100G ports provide high-speed backbone connectivity. 24-port models also feature an expansion (XEM) bay to easily add more capacity. Stack multiple units for a future-proof network.

Smart City and IoT networks

Large switching and routing tables support Smart City networks and the Internet of Things (IoT). The x950 Series meets the increasing demand for the convergence of multiple services.

Network automation

Allied Telesis Autonomous Management Framework™ Plus (AMF Plus) meets the increasing management requirements of modern converged networks, by automating many everyday tasks. AMF Plus has powerful features that allow an entire network to be easily managed as a single virtual device.

Vista Manager™ EX is an intuitive graphical tool for monitoring and managing AMF Plus wired and Autonomous Wave Control (AWC) wireless devices. Full visibility and powerful features enable proactive management of large networks.

Device, network, and security management

The Device GUI on the x950 Series enables graphical monitoring of key switch features to support easy management.

Integrated into the Device GUI, Vista Manager mini supports visibility and management of AMF Plus wired and AWC wireless network devices, making it ideal as a one-stop solution for small to medium-sized networks. AWC is an intelligent, easy to use Wireless LAN controller that automatically maintains optimal wireless coverage. Vista Manager mini includes AWC floor and heat maps showing wireless coverage. It also supports AWC Channel Blanket hybrid operation, providing maximum performance and seamless roaming, as well as AWC Smart Connect for simplified deployment, and a resilient Wi-Fi network solution using wireless uplink connectivity.

The AMF-Security mini controller, with management integrated into the Device GUI, ensures protection against internal LAN malware threats, automatically stopping the spread of infection.

Resilient

The convergence of network services has led to increasing demand for highly-available networks with minimal downtime. Virtual Chassis Stacking (VCStack™), in conjunction with link aggregation, provides a network with no single point of failure, and a resilient solution for high-availability applications. The x950 Series can form a VCStack of up to eight units, at any port speed, for enhanced resiliency and simplified management. With VCStack over Long Distance (VCStack LD), stacks can also be created over long distance fiber links, making it the perfect choice for distributed environments too.

Allied Telesis Ethernet Protection Switched Ring (EPSRing™) and the standards-based G.8032 Ethernet Ring Protection, ensure that distributed network segments have high-speed, resilient access to online resources and applications.

Reliable

Designed with reliability in mind, the x950 Series guarantees the continual delivery of essential services. Hot-swappable components, such as XEMs, fans and load-sharing power supplies, pair with near-hitless online stack reconfiguration to ensure that maintenance doesn't affect network uptime.

Key Features

- High capacity, with 4 x QSFP+/ QSFP28 slots supporting 40G or 100G connectivity
- Multi-gig, 10G, 40G, 100G XEMs (28-port models only)
- AC or DC PSU options
- Reverse airflow option for flexible deployment
- Allied Telesis Autonomous Management Framework™ Plus (AMF Plus)
- Large switching and routing tables support Smart City and IoT networks
- VCStack™ up to 8 units, locally or over distance
- EPSRing™ and G.8032 ERPS for resilient rings
- EPSR Master
- Active Fiber Monitoring (AFM) for fiber data and stacking links
- Media Access Control Security (MACSec)
- Modbus support
- Multicast Source Discovery Protocol (MSDP)
- Link Monitoring
- Bidirectional Forwarding Detection (BFD)
- VXLAN static tunnels
- AMF-Security mini
- AT-Vista Manager mini enables:
  - Wired and wireless network visibility
  - AWC wireless network management
  - AWC-Channel Blanket hybrid wireless
  - AWC-Smart Connect wireless uplinks
- FIPS 140-2 certified

Environmentally friendly

The x950 Series supports Energy Efficient Ethernet (EEE), automatically reduces power consumption whenever there is no traffic on a port, reducing operating costs.

Key Features

Vista Manager mini

- Integrated into the Device GUI, Vista Manager mini provides full network visibility of AMF Plus wired and AWC wireless devices. Manage and simplify wireless deployment with AWC-Smart Connect, and support optimal wireless performance from AWC hybrid operation with maximum throughout and a seamless Wi-Fi user experience.

Allied Telesis Autonomous Management Framework™ Plus (AMF Plus)

- AMF Plus is a sophisticated suite of management tools that provide a simplified approach to network management. Common tasks are automated or made so simple that the everyday running of a network can be achieved without the need for highly-trained, and expensive, network engineers. Powerful features like centralized management, auto-backup, auto-upgrade, auto-provisioning and auto-recovery enable plug-and-play networking and zero-touch management.
- The x950 Series can operate as the AMF Plus network master, storing firmware and configuration backups for all other network nodes. The AMF Plus master enables auto-provisioning and auto-upgrade by providing appropriate files to new network members.
- An AMF Plus license (from AW+ version 5.5.2-2 onwards) provides all standard AMF network management and automation features, and also enables the AMF Plus intent-based networking features menu in Vista Manager EX (from version 3.10.1 onwards)

AWC Wireless Management

- Optimize wireless network performance with the Autonomous Wave Controller (AWC), built-in to the x950 Series. AWC analyzes wireless traffic patterns and automatically reconfigures access points to meet demand.
- Wireless network operation in multi-channel, single-channel (Channel Blanket), and hybrid (multi-channel and Channel Blanket) modes, supports maximum data throughput and seamless roaming for the most flexible wireless solution available.
- AWC-Smart Connect (AWC-SC) enables plug-and-play wireless network growth, as new APs only need a power connection, and will then automatically create resilient wireless uplink connections to other APs.

Large Network Tables

- High-capacity 1.92 Terabit fabric and 1,190Mpps packet forwarding provide powerful data transfer capability, supporting large campus networks as well as Smart City and IoT solutions. Large MAC and IP host tables are ready for the increasing number of connected devices found in modern enterprise and city-wide networks.

Multi-Speed Ports

- Copper ports on the x950-28XTQm, XEM2-12XTm and XEM2-8XSTm expansion modules support 2.5 and 5 Gigabit connectivity to enable high-speed wireless, or maximum downlink speed using legacy Cat5E/6 cabling.

VCStack™

- Create a VCStack of up to eight units at any port speed. VCStack provides a highly available system where network resources are spread out across stacked units, reducing the impact if a unit fails. Aggregating switch ports on different units across the stack provides excellent network resiliency.

VCStack LD

- Long-distance stacking allows a VCStack to be created over fiber links to span longer distances, perfect for a distributed network environment.

EPSRing™

- EPSRing allows several switches to form protected rings with 50ms failover—perfect for high performance at the core of Enterprise or Provider Access networks. x950 Series switches can act as the EPSR Master.
- SuperLoop Protection enables a link between two EPSR nodes to be in separate EPSR domains, improving redundancy and network fault resiliency.

G.8032 Ethernet Ring Protection

- G.8032 provides standards-based high-speed ring protection, that can be deployed stand-alone, or interoperate with Allied Telesis EPSR.
- Ethernet Connectivity Fault Monitoring (CFM) proactively monitors links and VLANs, and provides alerts when a fault is detected.

Active Fiber Monitoring (AFM)

- AFM prevents eavesdropping on fiber communications by monitoring received optical power. If an intrusion is detected, the link can be automatically shut down, or an operator alert can be sent. Active Fiber Monitoring is supported on fiber data and fiber stacking links.

sFlow

- sFlow is an industry-standard technology for monitoring high-speed switched networks. It provides complete visibility into network use, enabling performance optimization, usage accounting/billing, and defense against security threats. Sampled packets sent to a collector (up to 5 collectors can be configured) ensure it always has a real-time view of network traffic.

Media Access Control Security (MACSec)

- 802.1AE MACSec secures all traffic on point-to-point Ethernet links between directly connected nodes, ensuring protection against security threats such as denial of service, intrusion, man-in-the-middle, passive wiretapping, and playback attacks.

AMF Application Proxy

- Allied Telesis SES (Secure Enterprise SDN) solution enables internal LAN threat detection and automatic end-point isolation to protect the network. The AMF Plus Application Proxy enables the SES controller to communicate with the AMF Plus master when a threat is detected, so the AMF Plus master can take action to block the threat at source by quarantining the infected end-point.

Virtual Routing and Forwarding (VRF Lite)

- VRF Lite provides Layer 3 network virtualization by dividing a single switch into multiple independent virtual routing domains. With independent routing domains, IP addresses can overlap without causing conflict, allowing multiple customers to have their own secure virtual network within the same physical infrastructure. VRF Lite supports both unicast and multicast traffic.
- The built-in DHCP Server on the x950 Series is VRF aware, enabling the supply of IP addresses to clients across multiple isolated networks.

VLAN Translation

- VLAN Translation allows traffic arriving on a VLAN to be mapped to a different outgoing VLAN.
- In Metro networks, a Service Provider (SP) will often give each customer a unique VLAN, yet customers may locally all use the same VLAN-IDs. VLAN Translation lets the SP change the VLAN-ID at the customer location to an ID to use in the SP network.
- This feature is also useful in the Enterprise to merge two networks together, without manually reconfiguring the VLAN numbering scheme. For example if two companies have merged and the same VLAN-ID is used for two different purposes.

Modbus

- Modbus enables communication with Supervisory Control and Data Acquisition (SCADA) systems for industrial automation.

Software-Defined Networking (SDN)

- OpenFlow is a key technology that enables the use of SDN to build smart applications that unlock value and reduce cost.

Bi-directional Forwarding Detection (BFD)

- BFD enables fast detection of link failures, so recovery time is minimized. BFD works with static routes, and also alongside BGP and OSPF dynamic routing protocols supporting faster shutdown of neighbor connections if a peer session goes down. When using VRF-Lite, BFD is supported globally or within a domain.

Multicast Source Discovery Protocol (MSDP)

- MSDP enables two or more PIM-SM (Sparse Mode) domains to share information on active multicast sources, for more efficient forwarding of multicast traffic.

Link Monitoring (Linkmon)

- Linkmon enables network health monitoring by regularly sending probes over key links to gather metrics comprising latency, jitter, and probe loss. This supports pro-active network management, and can also be used with triggers to automate a change to device or network configuration in response to the declining health of a monitored link.

AMF-Security mini

- The AMF-Sec mini security controller (integrated into the Device GUI) works with your security appliance to enable automatic protection from internal malware threats. It stops the spread of infection and protects the LAN by quarantining any suspect devices.

Flexible deployment

- The x950 Series supports both AC and DC PSU options for flexible deployment. Reverse airflow PSUs and fans are also available to support high-speed server connectivity from the top-of-rack in an Enterprise datacenter.

Virtual Extensible LAN (VXLAN) tunnels

- VXLAN tunnels let you join two or more L2 networks over an L3 IP network to form a single L2 broadcast domain. VXLAN adds scalability to cloud computing environments. The x950 Series supports static VXLAN tunnels.

Key Solutions

Distributed network core

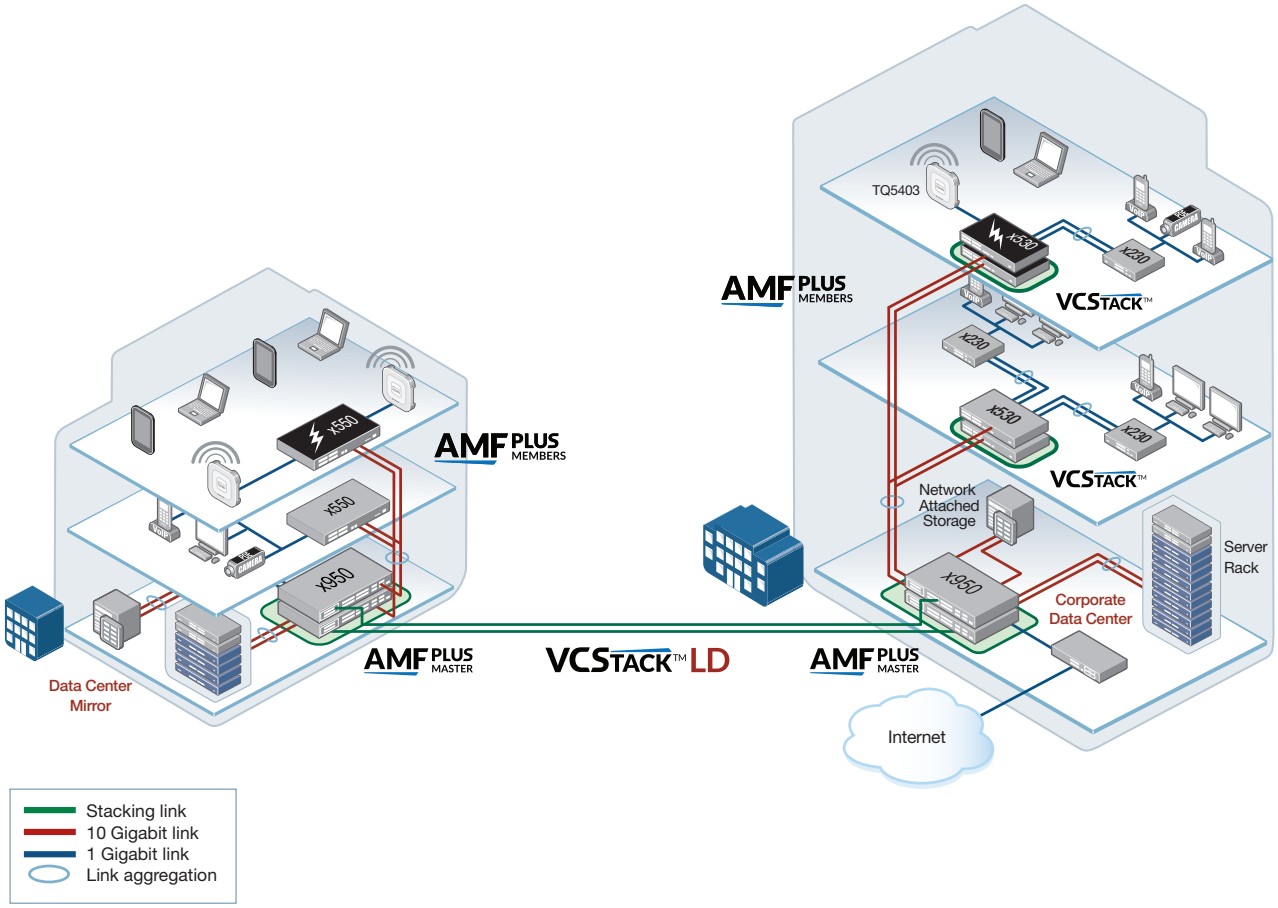

Today's corporate network users demand a high-performing enterprise network that can seamlessly carry multiple converged services, and provide instant access to online resources and applications. This key solution uses the x950 Series and VCStack LD—ideal for a distributed business network core that provides high availability, increased capacity and ease of management.

Using VCStack at the core of the network allows multiple switches to appear as a single virtual chassis, simplifying management. In normal operation, the full bandwidth of the network is used, and with two x950 switches in each location, there is both device and path resiliency. The x950 series stacks up to eight units at any port speed for flexible deployment—supporting up to four locations with complete resiliency, or up to eight locations with a single switch each.

This powerful solution easily supports all online services, while mirroring of the corporate data center enables automated disaster recovery, to ensure always-available access to digital resources.

AMF Plus allows the entire network to be unified for ease of management. The x950 VCStack acts as the AMF Plus Master, automatically backing up the entire network, and enabling plug-and-play networking with zero-touch expansion and recovery.

Key Solutions

Smart city network

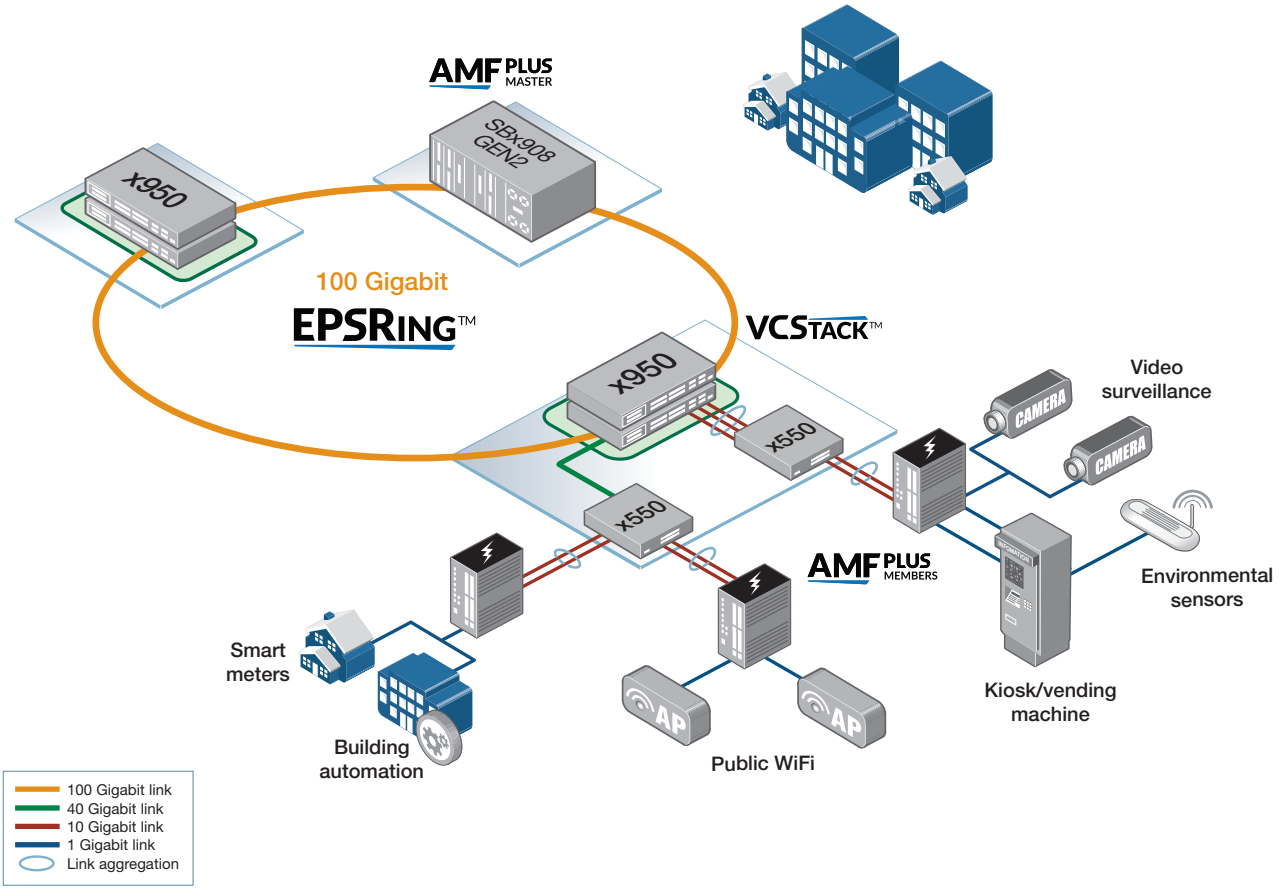

All over the world, Smart Cities are looking to increase information availability, security and transport efficiency, whilst reducing pollution and waste. Access to real-time data from a variety of sources gives cities the ability to enhance the quality of their urban services, and increase citizen safety.

In this key solution, x950 Series switches, together with the Allied Telesis SwitchBlade x908 GEN2, create the ideal distributed core solution for Smart City and IoT networks. Large switching and routing tables support the many devices that make up modern metropolitan networks, including video surveillance cameras, environmental sensors, information kiosks, public Wi-Fi, building automation and many more.

In this Smart City solution, the flexible x950 Series provides 10G, 40G and 100G connectivity. Allied Telesis EPSR creates a high-speed resilient metro ring running at 100Gbps for maximum performance, and extremely fast failover between nodes. EPSR enables rings to recover within as little as 50ms, preventing a node or link failure from impacting the delivery of converged data and video traffic.

AMF Plus automates many day-to-day tasks, backs up the entire network, and provides the ability to configure many or all devices city-wide—with a single command.

The x950 Series and Allied Telesis advanced features enable network managers to deliver leading Smart City services.

Key Solutions

Integrated wireless LAN management

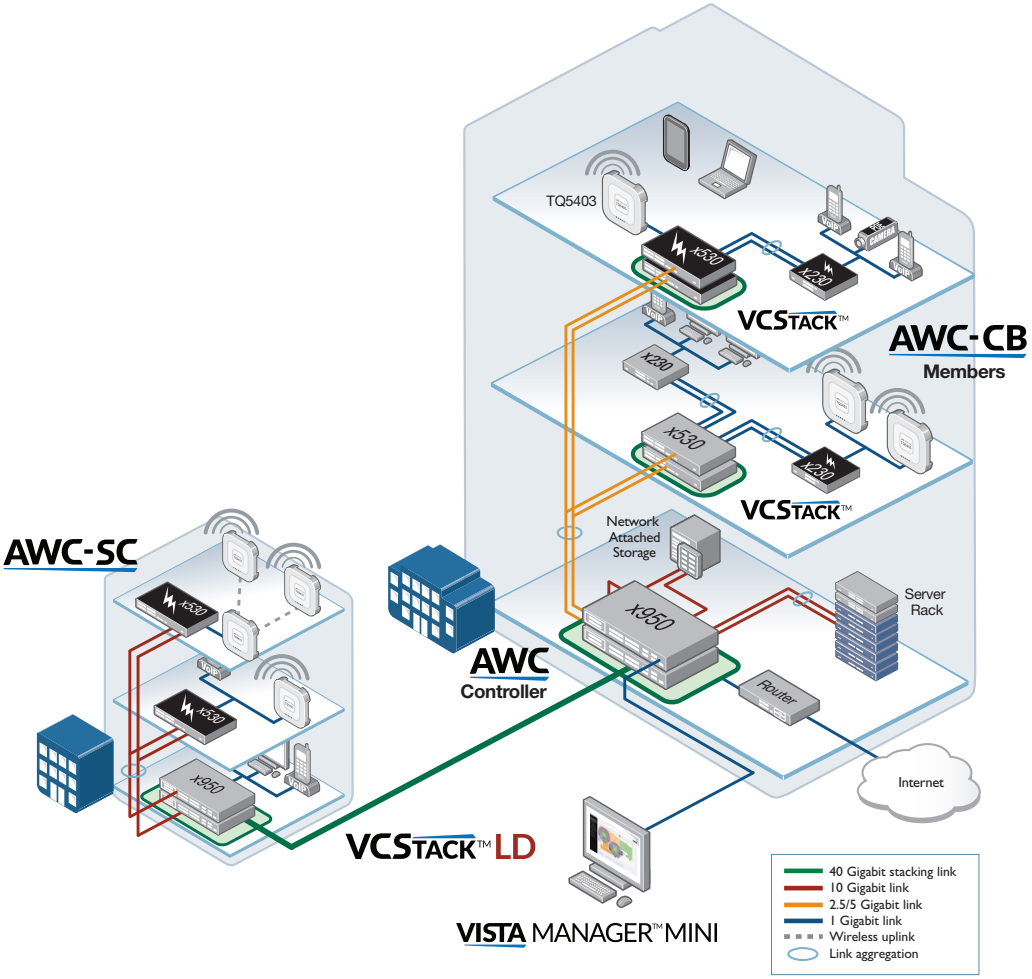

Allied Telesis Autonomous Wave Controller (AWC) offers solutions for two of the most common problems with Wireless LANs: initial setup complexity and on-going performance degradation. Initial WLAN set-up usually requires a site survey to achieve the best coverage; and performance of WLANs can often change over time as external sources of radio interference reduce coverage and bandwidth. These issues can be time-consuming to identify and resolve.

AWC features an intelligent process that automatically re-calibrates the signal strength and radio channel of each Access Point (AP) for optimal WLAN performance.

AWC Smart Connect (AWC-SC) uses wireless uplink connections between APs, so deployment is as easy as plugging in and powering on the new APs, which automatically extend the Wi-Fi network, creating a resilient solution.

Vista Manager mini is integrated into the Device Gui of the x950 Series and provides an ideal solution for modern enterprise networks, enabling management of both the wired (with AMF Plus) and wireless (with AWC) networks to be automated. This reduces both the time and cost of network administration, as well as maximizing network performance for a superior user experience.

Up to 5 TQ Series wireless APs can be managed for free, and up to a further 180 APs (max 185) with feature licenses, available separately.

On some AP models, hybrid channel blanket enables multi-channel and single-channel WiFi operation simultaneously. This supports seamless roaming and maximum throughput. Channel Blanket licenses are available for up to 180 APs. For plug-and-play wireless deployment AWC-SC licenses are available for up to 180 APs.

Key Solutions

Automated Internal LAN Security

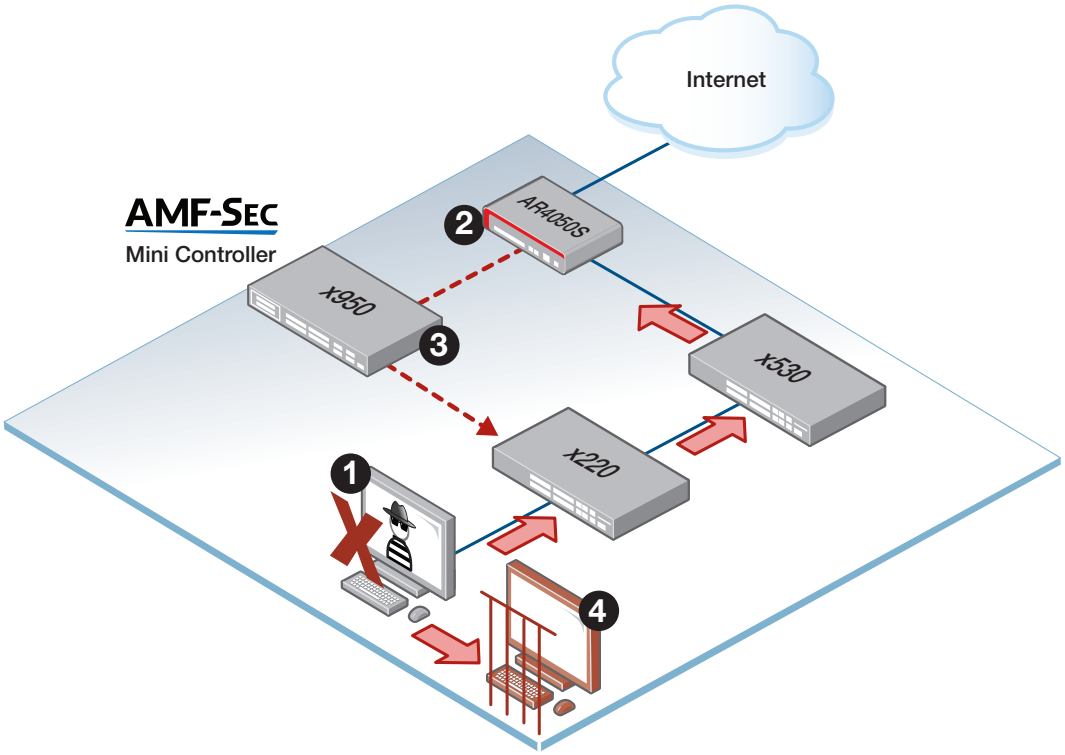

1. Targeted attack inside the network! Malware threat information is seen upline
2. The security appliance passes threat information to the AMF-Sec mini controller integrated into the x950 Series switch
3. AMF-Sec mini security controller instructs the x220 Series switch to block the threat source
4. Infected device is sent to quarantine to automatically stop the spread of infection

AMF Security mini

Most threat protection solutions are only capable of blocking suspicious external traffic arriving at the firewall from the Internet, so only those external threats can be detected and blocked—this is the traditional "secure border" model.

However, the AMF-Sec mini security controller integrated with the x950 Series switch can isolate traffic anywhere in the network, automatically blocking threats such as targeted attacks, or malware introduced inadvertently by staff with USB flash drives, BYOD and so on.

AMF-Sec mini enables automatic protection from internal threats, to protect the LAN from malware by quarantining any suspect devices. Get easy and immediate edge security, so you can relax and enjoy your self-defending network.

The AMF-Sec mini contoller can be managed from the Device GUI of the x950 for easy administration. AMF-Sec mini licenses for 1 year or 5 years are available (see the license table in this datasheet).

Specifications

PRODUCT	1/2.5/5/10G (RJ-45) COPPER PORTS	1/10 GIGABIT SFP+ PORTS	40G/100G QSFP+/ QSFP28 PORTS	XEM BAY	SWITCHING FABRIC	FORWARDING RATE
x950-28XSQ		24	4*	1	1.92Tbps	1190Mpps
x950-28XTQm	24		4*	1	1.92Tbps	1190Mpps
x950-52XSQ		48	4*		1.92Tbps	1309Mpps
x950-52XTQm	48		4*		1.92Tbps	1309Mpps

*Can also support up to 16 10G ports (using 4 x 10G breakout cables)

Performance
- Extensive wirespeed traffic classification for ACLs and QoS
- 9KB L2/L3 Jumbo frames
- Wirespeed multicasting
- 96K MAC address entries
- Up to 96K host entries
- Up to 8K multicast entries
- Up to 128 Link Aggregation Groups (LAGS) - any combination of static and dynamic (LACP)
- 4K VLANs (VCStack of up to 4 units)
- 2K VLANs (VCStack of 5-8 units)
- 4GB DDR SDRAM
- 16MB packet buffer memory
- 4GB Flash Memory
- Multicore CPU with 4 dual-threaded cores for high-performance, and enabling Vista Manager mini and AWC wireless network management

Reliability
- Modular AlliedWare Plus operating system
- Dual hot swappable PSUs with 1 + 1 redundancy
- Dual feed support: a separate power circuit can feed each power supply providing extra reliability
- Hot-swappable expansion module (XEM)
- Hot-swappable fan modules
- Full environmental monitoring of PSUs, fans, temperature and internal voltages, with SNMP traps to alert network managers in case of any failure

Expandability
- Support for 4 x 40G or 100G connections built in, and an expansion bay to add further switching capacity
- Versatile licensing options for additional features

Power Characteristics
- AC Voltage: 100 to 240V (+/-10% auto ranging)
- Frequency: 47 to 63Hz

Diagnostic Tools
- Active Fiber Monitoring detects tampering on optical links
- Built-In Self Test (BIST)
- Cable fault locator (TDR)
- Find-me device locator
- Hardware health monitoring
- Automatic link flap detection and port shutdown
- Optical Digital Diagnostic Monitoring (DDM)
- Ping polling for IPv4 and IPv6
- Port mirroring
- TraceRoute for IPv4 and IPv6
- Uni-Directional Link Detection (UDLD)

IPv4 Features
- Black hole routing
- Directed broadcast forwarding
- DNS relay
- Equal Cost Multi Path (ECMP) routing
- Policy-based routing
- Route maps
- Route redistribution (OSPF, BGP, RIP)
- Static unicast and multicast routing for IPv4
- UDP broadcast helper (IP helper)
- Up to 600 Virtual Routing and Forwarding (VRF lite) domains (with license)

IPv6 Features
- DHCPv6 client and relay
- DNSv6 client and relay
- IPv4 and IPv6 dual stack
- IPv6 hardware ACLs
- Device management over IPv6 networks with SNMPv6, Telnetv6 and SSHv6
- NTPv6 client and server
- Static unicast and multicast routing for IPv6
- Log to IPv6 hosts with Syslog v6
- IPv6 Ready certified

Management
- 7-segment LED provides at-a-glance status and fault information
- Allied Telesis Management Framework Plus (AMF Plus) enables powerful centralized management and zero-touch device installation and recover
- Try AMF Plus for free with the built-in Starter license
- Console management port on the front panel for ease of access
- Eco-friendly mode allows ports and LEDs to be disabled to save power
- Web-based Graphical User Interface (GUI)
- Industry-standard CLI with context-sensitive help
- Out-of-band 10/100/1000T Ethernet management port
- Powerful CLI scripting engine
- Comprehensive SNMP MIB support for standards-based device management
- Built-in text editor
- Event-based triggers allow user-defined scripts to be executed upon selected system events
- USB interface allows software release files, configurations and other files to be stored for backup and distribution to other devices

Quality of Service
- 8 priority queues with a hierarchy of high priority queues for real time traffic, and mixed scheduling, for each switch port
- Bandwidth limiting (virtual bandwidth)
  Limit bandwidth per port or per traffic class down to 64kbps
- Wirespeed traffic classification with low latency essential for VoIP and real-time streaming media applications
- IPv6 QoS support and IPv6-aware storm protection
- Policy-based QoS based on VLAN, port, MAC and general packet classifiers
- Policy-based storm protection
- Extensive remarking capabilities and taildrop for queue congestion control
- Queue scheduling options for strict priority, weighted round robin or mixed scheduling
- IP precedence and DiffServ marking based on layer 2, 3 and 4 headers

Resiliency Features
- Control Plane Prioritization (CPP) ensures the CPU always has sufficient bandwidth to process network control traffic
- Dynamic link failover (host attach)
- Ethernet Protection Switched Rings (EPSR) with SuperLoop Protection (SLP) and EPSR enhanced recovery for extra resiliency
- Bidirectional Forwarding Detection (BFD)
- Flexi-stacking allows the use of any port speed to stack
- Long-distance VCStack over fiber (VCStack LD)
- Loop protection: loop detection and thrash limiting
- PVST+ compatibility mode
- STP root guard
- VCStack fast failover minimizes network disruption

Security
- Federal Information Processing Standard Publication 140-2 (FIPS 140-2) certified
- Access Control Lists (ACLs) based on layer 3 and 4 headers
- Configurable ACLs for management traffic
- Dynamic ACLs assigned via port authentication
- ACL Groups enable multiple hosts/ports to be included in a single ACL, reducing configuration
- Auth fail and guest VLANs
- Authentication, Authorisation and Accounting (AAA)
- Bootloader can be password protected for device security
- BPDU protection
- DHCP snooping, IP source guard and Dynamic ARP Inspection (DAI)
- Dynamic VLAN assignment
- MAC address filtering and MAC address lock-down
- Media Access Control Security (MACSec)
- Network Access Control (NAC) features manage endpoint security
- Learn limits (intrusion detection) for single ports or LAGs
- Private VLANs provide security and port isolation for multiple customers using the same VLAN
- Secure Copy (SCP)
- Secure File Transfer Protocol (SFTP) client
- Strong password security and encryption
- TACACS+ command authorisation
- Tri-authentication: MAC-based, web-based and IEEE 802.1x
- Web-based authentication
- RADIUS group selection per VLAN or port
- RADIUS Proxy

Software-Defined Networking (SDN)
- OpenFlow v1.3 with support for encryption, connection interruption and inactivity probe

Environmental Specifications
- Operating temperature range:
  0°C to 50°C (32°F to 122°F)
  0°C to 45°C (32°F to 113°F) if using 100G

QSFP28 modules
Derated by 1°C per 305 meters (1,000 ft)

- Storage temperature range: -25°C to 70°C (-13°F to 158°F)
- Operating relative humidity range: 5% to 90% non-condensing
- Storage relative humidity range: 5% to 95% non-condensing
- Operating altitude: 3,050 meters maximum (10,000 ft)

Electrical Approvals and Compliances

- EMC: EN55032 class A, FCC class A, VCCI class A
- Immunity: EN55024, EN61000-3-levels 2 (Harmonics), and 3 (Flicker)

Safety

- Standards: UL60950-1, CAN/CSA-C22.2 No. 60950-1-03, EN60950-1, EN60825-1, AS/NZS 60950
- Certification: UL, cUL, TUV, FIPS 140-2

Restrictions on Hazardous Substances (RoHS) Compliance

- EU RoHS compliant
- China RoHS compliant

Physical Specifications

PRODUCT	WIDTH X DEPTH X HEIGHT	MOUNTING	WEIGHT	
			UNPACKAGED	PACKAGED
x950-28XSQ	440 x 445 x 44 mm (17.32 x 17.52 x 1.73 in)	Rack-mount 1 RU	7.26 kg (16.01 lb)	10.76 kg (23.72 lb)
x950-28XTQm	440 x 445 x 44 mm (17.32 x 17.52 x 1.73 in)	Rack-mount 1 RU	7.26 kg (16.01 lb)	10.94 kg (24.12 lb)
x950-52XSQ	441 x 449 x 44 mm (17.36 x 17.68 x 1.73 in)	Rack-mount 1 RU	7.5 kg (16.5 lb)	12.0 kg (26.5 lb)
x950-52XTQm	441 x 449 x 44 mm (17.36 x 17.68 x 1.73 in)	Rack-mount 1 RU	7.7 kg (16.98 lb)	11.26kg (24.83lb)
PWR600-AC	51 x 245 x 40 mm (2.0 x 9.6 x 1.6 in)	N/A	0.84 kg (1.85 lb)	2.04 kg (4.50 lb)
PWR600-DC	51 x 245 x 40 mm (2.0 x 9.6 x 1.6 in)	N/A	0.84 kg (1.85 lb)	1.84 kg (4.06 lb)
FAN05	153 x 100 x 43 mm (6.02 x 3.94 x 1.69 in)	N/A	0.35 kg (0.77 lb)	1.06 kg (2.34 lb)
PWR600R-AC	51 x 255 x 41 mm (2.0 x 10.04 x 1.62 in)	N/A	0.84kg (1.85 lb)	2.04 kg (4.50 lb)
PWR600R-DC	51 x 255 x 41 mm (2.0 x 10.04 x 1.62 in)	N/A	0.84kg (1.85 lb)	2.04 kg (4.50 lb)
FAN05R	153 x 80 x 43 mm (5.99 x 3.15 x 1.69 in)	N/A	0.36kg (0.79 lb)	1.03 kg (2.27 lb)
XEM2-8XSTm	130 x 166 x 40 mm (5.11 x 6.53 x 1.57 in)	N/A	0.70 kg (1.54 lb)	1.7 kg (3.75 lb)
XEM2-12XTm	130 x 166 x 40 mm (5.11 x 6.53 x 1.57 in)	N/A	0.75 kg (1.65 lb)	1.8 kg (3.97 lb)
XEM2-12XT	130 x 166 x 40 mm (5.11 x 6.53 x 1.57 in)	N/A	0.75 kg (1.65 lb)	1.8 kg (3.97 lb)
XEM2-12XS v2	130 x 166 x 40 mm (5.11 x 6.53 x 1.57 in)	N/A	0.75 kg (1.65 lb)	1.8 kg (3.97 lb)
XEM2-4QS	130 x 166 x 40 mm (5.11 x 6.53 x 1.57 in)	N/A	0.66 kg (1.45 lb)	1.7 kg (3.75 lb)
XEM2-1CQ	130 x 166 x 40 mm (5.11 x 6.53 x 1.57 in)	N/A	0.62 kg (1.37 lb)	1.6 kg (3.53 lb)

Power, Heat, Noise (with two PSUs installed)

PRODUCT	MAX POWER CONSUMPTION	MAX HEAT DISSIPATION	NOISE
x950-28XSQ	231.2W	789.0 BTU/h	63.4 dBA
x950-28XSQ + XEM2-8XSTm	250.3W	854.0 BTU/h	63.4 dBA
x950-28XSQ + XEM2-12XTm	261.6W	892.8 BTU/h	63.4 dBA
x950-28XSQ + XEM2-12XT	271.9W	927.7 BTU/h	63.4 dBA
x950-28XSQ + XEM2-12XS v2	262.3W	895.1 BTU/h	63.4 dBA
x950-28XSQ + XEM2-4QS	248.0W	846.4 BTU/h	63.4 dBA
x950-28XSQ + XEM2-1CQ	238.1W	812.8 BTU/h	63.4 dBA
x950-28XTQm	255.3W	871.1 BTU/h	61.9 dBA
x950-28XTQm + XEM2-8XSTm	273.9W	934.7 BTU/h	61.9 dBA
x950-28XTQm + XEM2-12XTm	284.6W	971.3 BTU/h	61.9 dBA
x950-28XTQm + XEM2-12XT	295.8W	1009.5 BTU/h	61.9 dBA
x950-28XTQm + XEM2-12XS v2	286.2W	976.6 BTU/h	61.9 dBA
x950-28XTQm + XEM2-4QS	271.7W	927.1 BTU/h	61.9 dBA
x950-28XTQm + XEM2-1CQ	261.7W	893.2 BTU/h	61.9 dBA
x950-52XSQ	266.1W	908.1 BTU/h	65.7 dBA
x950-52XTQm	300W	1,089 BTU/h	63.5 dBA

Latency (microseconds)

PRODUCT	LATENCY
x950-28XSQ	0.8µs
x950-28XTQm	2.3µs
x950-52XSQ	0.98 µs (100Gbps, FEC)
x950-52XTQm	2.3µs
XEM2-8XSTm	2.2µs
XEM2-12XTm	2.4µs
XEM2-12XT	2.4µs
XEM2-12XS v2	1.9µs
XEM2-4QS	0.7µs
XEM2-1CQ	0.7µs

Standards and Protocols

AlliedWare Plus Operating System

Version 5.5.3

Authentication

RFC 1321 MD5 Message-Digest algorithm
RFC 1828 IP authentication using keyed MD5

Border Gateway Protocol (BGP)

BGP dynamic capability
BGP outbound route filtering
RFC 1772 Application of the Border Gateway Protocol (BGP) in the Internet
RFC 1997 BGP communities attribute
RFC 2385 Protection of BGP sessions via the TCP MD5 signature option
RFC 2439 BGP route flap damping
RFC 2545 Use of BGP-4 multiprotocol extensions for IPv6 inter-domain routing
RFC 2858 Multiprotocol extensions for BGP-4
RFC 2918 Route refresh capability for BGP-4
RFC 3392 Capabilities advertisement with BGP-4
RFC 3882 Configuring BGP to block Denial-of-Service (DoS) attacks
RFC 4271 Border Gateway Protocol 4 (BGP-4)
RFC 4360 BGP extended communities
RFC 4456 BGP route reflection - an alternative to full mesh iBGP
RFC 4724 BGP graceful restart
RFC 4893 BGP support for four-octet AS number space
RFC 5065 Autonomous system confederations for BGP

Cryptographic Algorithms

FIPS Approved Algorithms

Encryption (Block Ciphers):

- AES (ECB, CBC, CFB and OFB Modes)
- 3DES (ECB, CBC, CFB and OFB Modes)

Block Cipher Modes:

- CCM
- CMAC
- GCM
- XTS

Digital Signatures & Asymmetric Key Generation:

- DSA
- ECDSA
- RSA

Secure Hashing:
- SHA-1
- SHA-2 (SHA-224, SHA-256, SHA-384. SHA-512)

Message Authentication:
- HMAC (SHA-1, SHA-2(224, 256, 384, 512)

Random Number Generation:
- DRBG (Hash, HMAC and Counter)

Non FIPS Approved Algorithms
RNG (AES128/192/256)
DES
MD5

Ethernet Standards

IEEE 802.1AE Media Access Control Security (MACSec)
IEEE 802.2 Logical Link Control (LLC)
IEEE 802.3 Ethernet
IEEE 802.3ab 1000BASE-T
IEEE 802.3ae 10 Gigabit Ethernet
IEEE 802.3an 10GBASE-T
IEEE 802.3az Energy Efficient Ethernet (EEE)
IEEE 802.3ba 40GBASE-X
IEEE 802.3bj 100GBASE-X
IEEE 802.3bz 2.5GBASE-T and 5GBASE-T
IEEE 802.3x Flow control - full-duplex operation
IEEE 802.3z 1000BASE-X

IPv4 Features

RFC 768 User Datagram Protocol (UDP)
RFC 791 Internet Protocol (IP)
RFC 792 Internet Control Message Protocol (ICMP)
RFC 793 Transmission Control Protocol (TCP)
RFC 826 Address Resolution Protocol (ARP)
RFC 894 Standard for the transmission of IP datagrams over Ethernet networks
RFC 919 Broadcasting Internet datagrams
RFC 922 Broadcasting Internet datagrams in the presence of subnets
RFC 932 Subnetwork addressing scheme
RFC 950 Internet standard subnetting procedure
RFC 951 Bootstrap Protocol (BootP)
RFC 1027 Proxy ARP
RFC 1035 DNS client
RFC 1042 Standard for the transmission of IP datagrams over IEEE 802 networks
RFC 1071 Computing the Internet checksum
RFC 1122 Internet host requirements
RFC 1191 Path MTU discovery
RFC 1256 ICMP router discovery messages
RFC 1518 An architecture for IP address allocation with CIDR
RFC 1519 Classless Inter-Domain Routing (CIDR)
RFC 1542 Clarifications and extensions for BootP
RFC 1591 Domain Name System (DNS)
RFC 1812 Requirements for IPv4 routers
RFC 1918 IP addressing
RFC 2581 TCP congestion control

IPv6 Features

RFC 1981 Path MTU discovery for IPv6
RFC 2460 IPv6 specification
RFC 2464 Transmission of IPv6 packets over Ethernet networks
RFC 2711 IPv6 router alert option
RFC 3484 Default address selection for IPv6
RFC 3587 IPv6 global unicast address format
RFC 3596 DNS extensions to support IPv6
RFC 4007 IPv6 scoped address architecture
RFC 4193 Unique local IPv6 unicast addresses
RFC 4213 Transition mechanisms for IPv6 hosts and routers
RFC 4291 IPv6 addressing architecture
RFC 4443 Internet Control Message Protocol (ICMPv6)
RFC 4861 Neighbor discovery for IPv6
RFC 4862 IPv6 Stateless Address Auto-Configuration (SLAAC)
RFC 5014 IPv6 socket API for source address selection
RFC 5095 Deprecation of type 0 routing headers in IPv6
RFC 5175 IPv6 Router Advertisement (RA) flags option
RFC 6105 IPv6 Router Advertisement (RA) guard

Management

AMF plus MIB and SNMP traps
AT Enterprise MIB
Optical DDM MIB
SNMPv1, v2c and v3
IEEE 802.1AB Link Layer Discovery Protocol (LLDP)
RFC 1155 Structure and identification of management information for TCP/IP-based Internets
RFC 1157 Simple Network Management Protocol (SNMP)
RFC 1212 Concise MIB definitions
RFC 1213 MIB for network management of TCP/IP-based Internets: MIB-II
RFC 1215 Convention for defining traps for use with the SNMP
RFC 1227 SNMP MUX protocol and MIB
RFC 1239 Standard MIB
RFC 1724 RIPv2 MIB extension
RFC 2578 Structure of Management Information v2 (SMIv2)
RFC 2579 Textual conventions for SMIv2
RFC 2580 Conformance statements for SMIv2
RFC 2674 Definitions of managed objects for bridges with traffic classes, multicast filtering and VLAN extensions
RFC 2741 Agent extensibility (AgentX) protocol
RFC 2787 Definitions of managed objects for VRRP
RFC 2819 RMON MIB (groups 1,2,3 and 9)
RFC 2863 Interfaces group MIB
RFC 3164 Syslog protocol
RFC 3176 sFlow: a method for monitoring traffic in switched and routed networks
RFC 3411 An architecture for describing SNMP management frameworks
RFC 3412 Message processing and dispatching for the SNMP
RFC 3413 SNMP applications
RFC 3414 User-based Security Model (USM) for SNMPv3
RFC 3415 View-based Access Control Model (VACM) for SNMP
RFC 3416 Version 2 of the protocol operations for the SNMP
RFC 3417 Transport mappings for the SNMP
RFC 3418 MIB for SNMP
RFC 3621 Power over Ethernet (PoE) MIB
RFC 3635 Definitions of managed objects for the Ethernet-like interface types
RFC 3636 IEEE 802.3 MAU MIB
RFC 4022 MIB for the Transmission Control Protocol (TCP)
RFC 4113 MIB for the User Datagram Protocol (UDP)
RFC 4188 Definitions of managed objects for bridges
RFC 4292 IP forwarding table MIB
RFC 4293 MIB for the Internet Protocol (IP)
RFC 4318 Definitions of managed objects for bridges with RSTP
RFC 4560 Definitions of managed objects for remote ping, traceroute and lookup operations
RFC 6527 Definitions of managed objects for VRRPv3

Multicast Support

Bootstrap Router (BSR) mechanism for PIM-SM
IGMP query solicitation
IGMP snooping (IGMPv1, v2 and v3)
IGMP snooping fast-leave
IGMP/MLD multicast forwarding (IGMP/MLD proxy)
MLD snooping (MLDv1 and v2)
PIM for IPv6
PIM SSM for IPv6
RFC 1112 Host extensions for IP multicasting (IGMPv1)
RFC 2236 Internet Group Management Protocol v2 (IGMPv2)
RFC 2710 Multicast Listener Discovery (MLD) for IPv6
RFC 2715 Interoperability rules for multicast routing protocols
RFC 3306 Unicast-prefix-based IPv6 multicast addresses
RFC 3376 IGMPv3
RFC 3618 Multicast Source Discovery Protocol (MSDP)
RFC 3810 Multicast Listener Discovery v2 (MLDv2) for IPv6
RFC 3956 Embedding the Rendezvous Point (RP) address in an IPv6 multicast address
RFC 3973 PIM Dense Mode (DM)
RFC 4541 IGMP and MLD snooping switches
RFC 4601 Protocol Independent Multicast - Sparse Mode (PIM-SM): protocol specification (revised)
RFC 4604 Using IGMPv3 and MLDv2 for source-specific multicast
RFC 4607 Source-specific multicast for IP

Open Shortest Path First (OSPF)

OSPF link-local signaling
OSPF MD5 authentication
Out-of-band LSDB resync
RFC 1245 OSPF protocol analysis
RFC 1246 Experience with the OSPF protocol
RFC 1370 Applicability statement for OSPF
RFC 1765 OSPF database overflow
RFC 2328 OSPFv2
RFC 2370 OSPF opaque LSA option
RFC 2740 OSPFv3 for IPv6
RFC 3101 OSPF Not-So-Stubby Area (NSSA) option
RFC 3509 Alternative implementations of OSPF area border routers
RFC 3623 Graceful OSPF restart
RFC 3630 Traffic engineering extensions to OSPF
RFC 4552 Authentication/confidentiality for OSPFv3
RFC 5329 Traffic engineering extensions to OSPFv3
RFC 5340 OSPFv3 for IPv6 (partial support)

Quality of Service (QoS)

IEEE 802.1p Priority tagging
RFC 2211 Specification of the controlled-load network element service
RFC 2474 DiffServ precedence for eight queues/port
RFC 2475 DiffServ architecture
RFC 2597 DiffServ Assured Forwarding (AF)
RFC 2697 A single-rate three-color marker
RFC 2698 A two-rate three-color marker
RFC 3246 DiffServ Expedited Forwarding (EF)

Resiliency Features

IEEE 802.1AX Link aggregation (static and LACP)
IEEE 802.1D MAC bridges
IEEE 802.1s Multiple Spanning Tree Protocol (MSTP)
IEEE 802.1w Rapid Spanning Tree Protocol (RSTP)
IEEE 802.3ad Static and dynamic link aggregation
RFC 5798 Virtual Router Redundancy Protocol version 3 (VRRPv3) for IPv4 and IPv6
RFC5880 Bidirectional Forwarding Detection (BFD)

Routing Information Protocol (RIP)

RFC 1058 Routing Information Protocol (RIP)
RFC 2080 RIPng for IPv6
RFC 2081 RIPng protocol applicability statement
RFC 2082 RIP-2 MD5 authentication
RFC 2453 RIPv2

Security Features

SSH remote login
SSLv2 and SSLv3
TACACS+ Accounting, Authentication and Authorization (AAA)
IEEE 802.1X Authentication protocols (TLS, TTLS, PEAP and MD5)
IEEE 802.1X Multi-supplicant authentication
IEEE 802.1X Port-based network access control
RFC 2818 HTTP over TLS ("HTTPS")
RFC 2865 RADIUS authentication
RFC 2866 RADIUS accounting
RFC 2868 RADIUS attributes for tunnel protocol support
RFC 3280 Internet X.509 PKI Certificate and Certificate Revocation List (CRL) profile
RFC 3546 Transport Layer Security (TLS) extensions
RFC 3579 RADIUS support for Extensible Authentication Protocol (EAP)
RFC 3580 IEEE 802.1x RADIUS usage guidelines
RFC 3748 PPP Extensible Authentication Protocol (EAP)

RFC 4251 Secure Shell (SSHv2) protocol architecture
RFC 4252 Secure Shell (SSHv2) authentication protocol
RFC 4253 Secure Shell (SSHv2) transport layer protocol
RFC 4254 Secure Shell (SSHv2) connection protocol
RFC 5176 RADIUS CoA (Change of Authorization)
RFC 5246 TLS v1.2

Services

RFC 854 Telnet protocol specification
RFC 855 Telnet option specifications
RFC 857 Telnet echo option
RFC 858 Telnet suppress go ahead option
RFC 1091 Telnet terminal-type option
RFC 1350 Trivial File Transfer Protocol (TFTP)
RFC 1985 SMTP service extension
RFC 2049 MIME
RFC 2131 DHCPv4 (server, relay and client)
RFC 2132 DHCP options and BootP vendor extensions
RFC 2616 Hypertext Transfer Protocol - HTTP/1.1
RFC 2821 Simple Mail Transfer Protocol (SMTP)
RFC 2822 Internet message format
RFC 3046 DHCP relay agent information option (DHCP option 82)
RFC 3315 DHCPv6 (server, relay and client)
RFC 3633 IPv6 prefix options for DHCPv6
RFC 3646 DNS configuration options for DHCPv6
RFC 3993 Subscriber-ID suboption for DHCP relay agent option
RFC 4330 Simple Network Time Protocol (SNTP) version 4
RFC 5905 Network Time Protocol (NTP) version 4

VLAN Support

Generic VLAN Registration Protocol (GVRP)
IEEE 802.1ad Provider bridges (VLAN stacking, Q-in-Q)
IEEE 802.1Q Virtual LAN (VLAN) bridges
IEEE 802.1v VLAN classification by protocol and port
IEEE 802.3acVLAN tagging
Static VXLAN tunnels (part of RFC 7348)

Voice over IP (VoIP)

LLDP-MED ANSI/TIA-1057
Voice VLAN

Feature Licenses

NAME	DESCRIPTION	INCLUDES	STACK LICENSING
AT-FL-x950-01	x950 Premium license	▶ OSPF[1] (16,000 routes) ▶ BGP4[1] (5,000 routes) ▶ PIMv4-SM, DM and SSM (2,000 entries) ▶ VLAN double tagging (Q-in-Q) ▶ RIPng (5,000 routes) ▶ OSPFv3 (8,000 routes) ▶ BGP4+ (5,000 routes) ▶ MLDv1 and v2 ▶ PIMv6-SM and SSM (1,000 entries) ▶ VRF lite (63 domains) ▶ RADIUS Full ▶ UDLD ▶ VLAN Translation ▶ VXLAN	▶ One license per stack member
AT-SW-APM10-1YR[2, 3]	Cumulative AMF Plus Master license	▶ AMF Plus Master license for up to 10 nodes for 1 year	▶ One license per stack
AT-SW-APM10-5YR[2, 3]	Cumulative AMF Plus Master license	▶ AMF Plus Master license for up to 10 nodes for 5 years	▶ One license per stack
AT-FL-x950-AAP-1YR	AMF Application Proxy license	▶ AMF Application Proxy license for 1 year	▶ One license per stack
AT-FL-x950-AAP-5YR	AMF Application Proxy license	▶ AMF Application Proxy license for 5 years	▶ One license per stack
AT-FL-x950-OF13-1YR	OpenFlow license	▶ OpenFlow v1.3 for 1 year	▶ Not supported on a stack
AT-FL-x950-OF13-5YR	OpenFlow license	▶ OpenFlow v1.3 for 5 years	▶ Not supported on a stack
AT-FL-x950-8032	ITU-T G.8032 license	▶ G.8032 ring protection ▶ Ethernet CFM	▶ One license per stack member
AT-FL-x950-MODB	Modbus license	▶ Modbus for industrial applications	▶ One license per stack member
AT-FL-x950-MSEC[4]	MACSec license	▶ Media Access Control Security	▶ One license per stack member
AT-FL-x950-VLF	VRF-Lite Full license	▶ VRF lite (600 domains)	▶ One license per stack member
AT-FL-x950-ASEC-1YR	AMF-Sec license	▶ AMF-Sec license for 1 year	▶ One license per stack
AT-FL-x950-ASEC-5YR	AMF-Sec license	▶ AMF-Sec license for 5 years	▶ One license per stack
AT-SW-AWC10-1YR[5]	Cumulative AWC license	▶ Autonomous Wave Control (AWC) license for up to 10 access points for 1 year	▶ One license per stack
AT-SW-AWC10-5YR[5]	Cumulative AWC license	▶ Autonomous Wave Control (AWC) license for up to 10 access points for 5 years	▶ One license per stack
AT-SW-CB10-1YR-2022[6]	Cumulative AWC-CB and AWC-SC license	▶ AWC Channel Blanket and AWC Smart Connect license for up to 10 access points for 1 year	▶ One license per stack
AT-SW-CB10-5YR-2022[6]	Cumulative AWC-CB and AWC-SC license	▶ AWC Channel Blanket and AWC Smart Connect license for up to 10 access points for 5 years	▶ One license per stack

[1] 64 OSPF and BGP routes included in base license
[2] From AW+ version 5.5.2-2 onwards, AMF Plus licenses provide all standard AMF network management and automation features. They also enable the AMF Plus intent-based networking features menu in Vista Manager EX (from version 3.10.1 onwards)
[3] Purchase one license per 10 nodes (up to 180 nodes maximum)
[4] MACSec only operates on the XEM2-12XS v2 and XEM2-8XSTm expansion modules
[5] 5 APs can be managed for free. Purchase one license per 10 additional APs (up to 180 APs maximum)
[6] Channel Blanket and Smart Connect are not available as free services. Both an AWC-CB license and an AWC license are required for Channel Blanket and/or Smart Connect to operate. Purchase one AWC-CB license per 10 APs (up to 180 APs maximum). Channel Blanket is supported on TQ6602, TQ5403, and TQ5403e access points. Smart Connect is supported on TQ5403, and TQ5403e access points

Ordering Information

AT-x950-28XSQ-B0y[7, 8]
24-port 1/10G SFP/SFP+ stackable switch with 4 x 40G/100G QSFP+/QSFP28 ports, a XEM bay, and dual hotswap PSU and Fan bays

AT-x950-28XTQm-B0y[7, 8]
24-port 1/2.5/5/10G copper stackable switch with 4 x 40G/100G QSFP+/QSFP28 ports, a XEM bay, and dual hotswap PSU and Fan bays

AT-x950-52XSQ-B0y[7, 8]
48-port 1/10G SFP/SFP+ stackable switch with 4 x 40G/100G QSFP+/QSFP28 ports, and dual hotswap PSU and Fan bays

AT-x950-52XTQm-B0y[7, 8]
48-port 100M(FD)/1G/2.5G/5G/10G copper ports with 4 x 40G/100G ports QSFP+/QSFP28 ports, and dual hotswap PSU and Fan bays

AT-RKMT-SL01
Sliding rack mount kit

AT-FAN05-B0y[7]
Spare hot-swappable fan module

AT-PWR600-B8y[7, 8]
600W DC system power supply

AT-PWR600-BXy[7, 8, 9]
600W AC system power supply

AT-FAN05R-B0y
Hot-swappable fan module (reverse airflow)

AT-PWR600R-B8y
600W DC system power supply (reverse airflow)

AT-PWR600R-BXy
600W AC system power supply (reverse airflow)

AT-XEM2-8XSTm-B0y[7]
4 x 1/2.5/5/10G RJ45 ports and 4 x 1G/10G SFP+ ports

AT-XEM2-12XTm-B0y[7]
12 x 1/2.5/5/10G RJ45 ports

AT-XEM2-12XT-B0y[7]
12 x 100M/1G/10G RJ45 ports

AT-XEM2-12XS v2-B0y[7]
12 x 1G/10G SFP+ ports

AT-XEM2-4QS-B0y[7]
4 x 40G QSFP+ ports

AT-XEM2-1CQ-B0y[7]
1 x 100G QSFP28 port

Accessories

100G QSFP28 Modules

AT-QSFP28-SR4
100GSR 850nm short-haul up to 100 m with MMF

AT-QSFP28-LR4
100GLR 1310nm medium-haul, 10 km with SMF

AT-QSFP28-1CU
1 meter QSFP28 direct attach cable

AT-QSFP28-3CU
3 meter QSFP28 direct attach cable

40G QSFP+ Modules

AT-QSFP1CU
1 meter QSFP+ direct attach cable

AT-QSFP3CU
3 meter QSFP+ direct attach cable

AT-QSFPSR4
40GSR4 850nm short-haul up to 150 m with MMF

AT-QSFPLR4
40GLR4 1310 nm medium-haul, 10 km with SMF

AT-QSFPER4
40GER4 1310 nm long-haul, 40 km with SMF

AT-MTP12-1
1 meter MTP optical cable for AT-QSFPSR

AT-MTP12-5
5 meter MTP optical cable for AT-QSFPSR

Breakout Cables For 4 x 10G connections

AT-QSFP-4SFP10G-3CU
QSFP to 4 x SFP+ breakout direct attach cable (3 m)

AT-QSFP-4SFP10G-5CU
QSFP to 4 x SFP+ breakout direct attach cable (5 m)

10GbE SFP+ Modules

AT-SP10SR
10GSR 850 nm short-haul, 300 m with MMF

AT-SP10SR/I
10GSR 850 nm short-haul, 300 m with MMF industrial temperature

AT-SP10LRM
10GLRM 1310 nm short-haul, 220 m with MMF

AT-SP10LR
10GLR 1310 nm medium-haul, 10 km with SMF

AT-SP10LRa/I
10GLR 1310 nm medium-haul, 10 km with SMF industrial temperature

AT-SP10ER40a/I
10GER 1310nm long-haul, 40 km with SMF industrial temperature

AT-SP10ZR80/I
10GER 1550nm long-haul, 80 km with SMF industrial temperature

AT-SP10TM
1G/2.5G/5G/10G, 100m copper, Trade Act Agreement compliant

10GbE SFP+ Cables

AT-SP10TW1
1 meter SFP+ direct attach cable

AT-SP10TW3
3 meter SFP+ direct attach cable

AT-SP10TW7
7 meter SFP+ direct attach cable

1000Mbps SFP Modules

AT-SPSX/I
1000SX GbE multi-mode 850 nm fiber up to 550 m industrial temperature

AT-SPTX
1000T 100 m copper

AT-SPSX
1000SX GbE multi-mode 850 nm fiber up to 550 m

AT-SPEX
1000X GbE multi-mode 1310 nm fiber up to 2 km

AT-SPLX10
1000LX GbE single-mode 1310 nm fiber up to 10 km

AT-SPLX10/I
1000LX GbE single-mode 1310 nm fiber up to 10 km industrial temperature

AT-SPBD10-13
1000LX GbE Bi-Di (1310 nm Tx, 1490 nm Rx) fiber up to 10 km

AT-SPBD10-14
1000LX GbE Bi-Di (1490 nm Tx, 1310 nm Rx) fiber up to 10 km

AT-SPBD20-13/I
1000BX GbE Bi-Di (1310 nm Tx, 1490 nm Rx) fiber up to 20 km

AT-SPBD20-14/I
1000BX GbE Bi-Di (1490 nm Tx, 1310 nm Rx) fiber up to 20 km

AT-SPBD40-13/I
1000LX GbE single-mode Bi-Di (1310 nm Tx, 1490 nm Rx) fiber up to 40 km, industrial temperature

AT-SPBD40-14/I
1000LX GbE single-mode Bi-Di (1490 nm Tx, 1310 nm Rx) fiber up to 40 km, industrial temperature

AT-SPLX40
1000LX GbE single-mode 1310 nm fiber up to 40 km

AT-SPZX80
1000ZX GbE single-mode 1550 nm fiber up to 80 km

AT-SPZX120/I
1000ZX GbE single-mode 1550 nm fiber up to 120 km industrial temperature

[7] Where Oy = 01 for 1 year Net Cover support
05 for 5 years Net Cover support

[8] Note that fans are included but NO power supplies ship with the base chassis, they must be ordered separately

[9] Where x = 1y for AC power supply with US power cord
2y for AC power supply with no power cord
3y for AC power supply with UK power cord
4y for AC power supply with AU power cord
5y for AC power supply with EU power cord

© 2023 Allied Telesis, Inc. All rights reserved.

617-000649 RevZM