UNION SWITCH & SIGNAL

2003 Railway Signaling Equipment Catalog

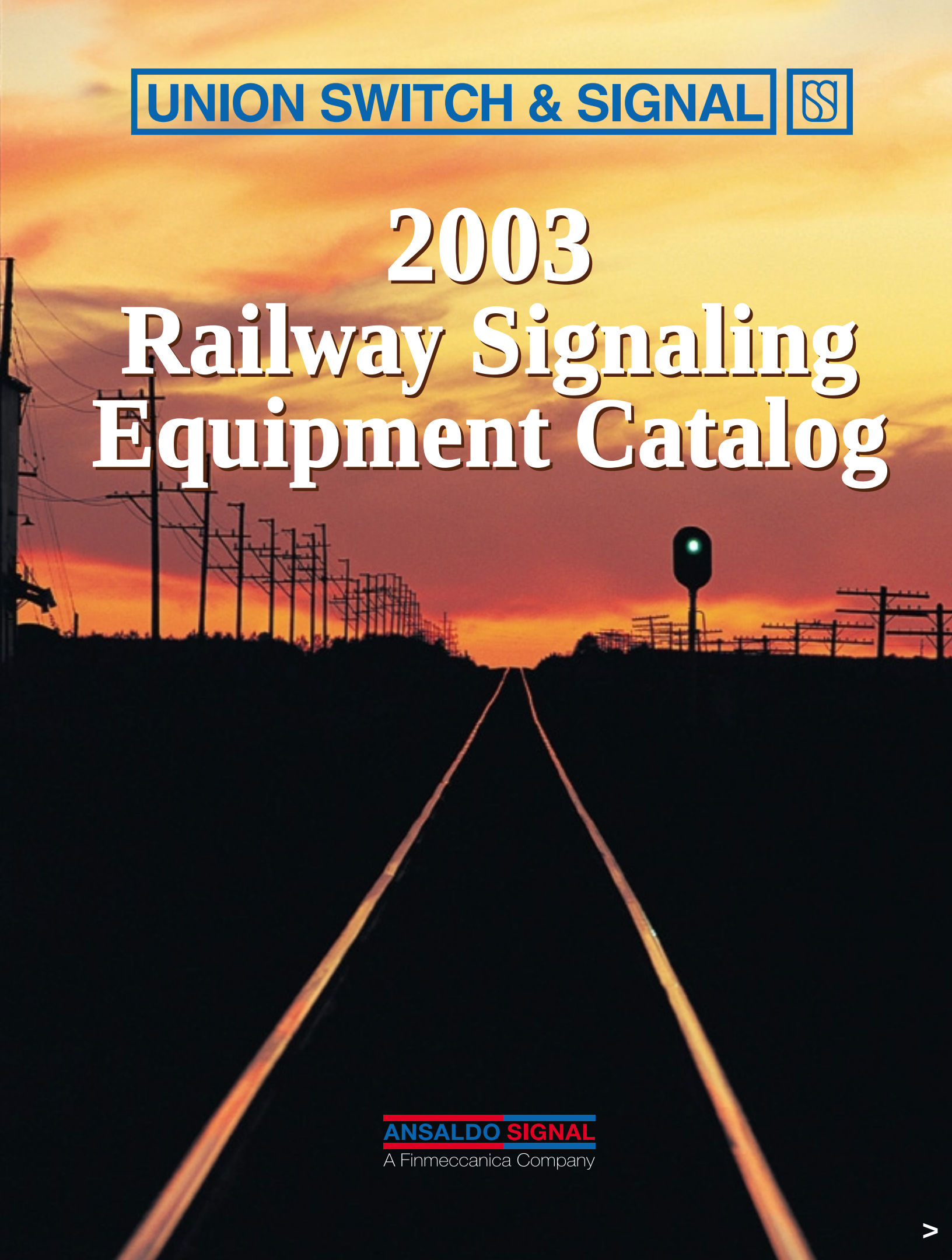

ANSALDO SIGNAL
A Finmeccanica Company



Table of Contents

Wayside Control Systems

Carborne and Integrated Carborne-Wayside Control Systems

Wayside Signaling Products

Vital Relays and Timers

Highway Crossing Equipment

Switch Machines and Associated Equipment

Signals and Associated Equipment

Cab Signal Products

Misc. Products and Components

TABLE OF CONTENTS

General Information – Using the US&S RSE Catalog 1
Finding and Ordering Your System or Product 1
Placing Your Order and Answers to Questions 1
Repair and Remanufacturing Services 2
- Repair and Return Service 2
- Remanufacturing Service 2
- Inspection Service 2
- Skilled Field Service Technicians 2
- RAIL Team 2
- Skilled Service Center Technicians 2
- Training 3
- Warranty 3

Returned Material Authorization Procedure 3
About Union Switch & Signal 4
US&S Service Centers and Headquarters 5
US&S Field Sales Offices 5
Terms & Conditions of Sale 6
2003 New Product Highlights 7

RSE Catalog Sections

System or Product	RSE Catalog Section	Revision Date
Wayside Control Systems		
MicroLok II, ECode and I-Lok Systems		
MicroLok II Wayside Control System - General Information	1A1	July, 2003
E-Code Track Circuit System	1B1	July, 2003
i-Lok Track Circuit System	1C1	July, 2003
MicroLok II, ECode and i-Lok Major Components		
Cardfiles	1D1	July, 2003
Plug-In PCBs and Front Panels	1D2	July, 2003
Track Interface Panels	1D3	July, 2003
Quick Shunt Module	1D4	July, 2003
AC Lamp Driver Module, Hot Filament Checker and and Redundancy PCB	1D5	July, 2003
Isolation Module	1D6	July, 2003
Vital and Non-Vital Serial Link Interface Units	1D7	July, 2003
Vital Cut-Off and Power-Off Relays	1D8	July, 2003
Solid-State Switch Machine Modules and Associated Equipent	1D9	July, 2003
MicroLok II, E-Code and i-Lok Software	1E1	July, 2003
AF-900 Series Digital FSK Track Circuits		
General Information	1F1	July, 2003
Major Components	1F2	July, 2003
Carborne and Integrated Carborne-Wayside Control Systems		
Cab Signaling Systems		
MicroCab System General Information	2A1	July, 2003
MicroCab Major Components	2A2	July, 2003
Carborne Integrated with Wayside		July, 2003
Advanced Speed Enforcement System (ASES) - General Information	2B1	July, 2003

System or Product	RSE Catalog Section	Revision Date
i-Cab Intermitttent Cab Signaling System - General Information	2B2	July, 2003
ASES/i-Cab Systems - Major Vehicle Components	2B3	July, 2003
ASES/i-Cab Systems - Major Wayside Components	2B4	July, 2003
Digitrac Train Location System	2C1	
End-of-Train Systems		
Digitair End-of-Train General Information	2D1	July, 2003
Digitair Model 6699-CC Sense and Brake Unit (SBU)	2D2	July, 2003
Digitair Model 6696 Communications Display Unit (CDU)	2D3	July, 2003
Digitair Model 6680 Communications Interface Unit (CIU)	2D4	July, 2003
Digitair Model 6689 Repeater (NEMA Type)	2D5	July, 2003
Digitair Model 6680 Repeater (CIU Type)	2D6	July, 2003
Digitair Model 6635 Battery Charger/Analyzer	2D7	July, 2003
Digitair Ni-CaD Rechargeable Battery	2D8	July, 2003
Train to Wayside Communications System (TWC)	2E1	July, 2003
AFO-Based Transit Vehicle Precision Berthing System	2F1	July, 2003
Wayside Signaling Products		
Switch Machine Control		
SML-24 Switch Lock and SMC Controller	3A1	July, 2003
SML-110 Switch Lock and PN-150SSR Solid-State Relay	3A2	July, 2003
Switch Machine Controller - Biased Neutral	3A3	July, 2003
AFO Electronics (Highway Crossing)		
AFO-IIC Track Circuit - Non-Electrified Territory Applications	3B1	July, 2003
AFO-IIC Track Circuit - Electrified Territory Applications	3B2	July, 2003
ATT-20 Audio Track Transceiver	3B3	July, 2003
Misc. Track Circuits		
TRU-II Track Resonant Unit and Code Reset Unit	3C1	July, 2003
Phase Selective Unit (PSU)	3C2	July, 2003
Train Stops		
EM-I Automatic Train Stop	3D1	July, 2003
Style “S” Electro-Pneumatic Train Stop	3D2	July, 2003
Power Supplies		
W-400 Transformer	3E1	July, 2003
W-800 Transformer	3E2	July, 2003
CCR Constant Current Rectifiers	3F1	July, 2003
CPR Constant Potential Rectifiers	3F2	July, 2003
F-81 DC/AC Inverter	3G1	July, 2003
F-82 DC/AC Inverter	3G2	July, 2003
F-85 Inverter-Driver	3G3	July, 2003
Circuit Protection		
Surge Ripple Filter	3H1	July, 2003
USG-A Lightning Arresters	3H2	July, 2003
USSP Secondary Surge Suppressors	3H3	July, 2003
CMF-101 Common Mode Filter	3H4	July, 2003
Vital Relays		
Ordering Guide – Solid State Replacements for Electro-Mechanical Relays and Timers	4A1	July, 2003
Solid-State		
PN-150SST Solid-State Timers	4B1	July, 2003
PN-150EVT Electronic Vital Timers	4B2	July, 2003

System or Product	RSE Catalog Section	Revision Date
Five-Second Fixed Electronic Vital Timer	4B3	July, 2003
PN-250CG Solid-State Code Transmitter	4C1	July, 2003
SSCT-B2 Solid-State Code Transmitter	4C2	July, 2003
DMSSCT Solid-State Code Transmitter	4C3	July, 2003
PC-250SS Solid-State Code Follower	4C4	July, 2003
SSCF Solid-State Code Follower	4C5	July, 2003
Electro-Mechanical		
DC Line - Biased and Neutral		
PN-150B Biased Relay	4E1	July, 2003
PN-150HD Relay – With Heavy Duty Contacts	4E2	July, 2003
PN-150BD 3-Position Relay	4E3	July, 2003
PN-250B Relay	4E4	July, 2003
DC Line - Slow Drop-Away and/or Pick-Up		
PN-150BSR Slow Release Relay	4F1	July, 2003
PN-258B Slow Pick-Up Relay	4F2	July, 2003
PN-258BSR Slow Pick-Up/Slow Release Relay	4F3	July, 2003
PN-259BSR Slow Release Relay	4F4	July, 2003
PN-259SRA Slow Release Relay	4F5	July, 2003
DC Line - Biased, D.A., High D.A.		
PN-150BTR Biased Track Relay	4G1	July, 2003
PN-150BH Biased Track Circuit Relay	4G2	July, 2003
DC Flasher		
PN-150F Flasher Relay	4H1	July, 2003
PN-250F Flasher Relay	4H2	July, 2003
AC Track		
PV-250 2-Element AC Vane Relay	4J1	July, 2003
DC Line - Magnetic Stick and Blow-Out		
PP-151 Magnetic Stick Relay	4K1	July, 2003
PN-150BM Magnetic Blow-Out Relay	4K2	July, 2003
Switch Contro l- DC and AC Decoding		
PN-150SO DC Switch Control Relay	4L1	July, 2003
PN-152SO DC Switch Control Relay	4L2	July, 2003
PN-258BC Switch Control/Decoding Relay	4L3	July, 2003
Code Generating		
PC-250TR Code Generating Relay	4M1	July, 2003
Code Following		
PC-250B Biased Code Following Relay	4N1	July, 2003
PC-250P Magnetic Stock Code Following Relay	4N2	July, 2003
PN-150BE High Efficiency Biased Code Following Relay	4N3	July, 2003
PN-250BE Code Following Relay	4N4	July, 2003
Light-Out		
PN-150BL Light Out Relay	4P1	July, 2003
Power Off		
PN-150P Power-Off Relay	4Q1	July, 2003
Relay Plug-In Bases		
PN-150/250 Plug-In Relay Bases	4R1	July, 2003
PN-150 Base – GRS(Alstom)/Safetran-Compatible	4R2	July, 2003
Plug-In Relay Receptacle Contact Tools	4S1	July, 2003
PN Relay Shelf Mounting Brackets and Frame	4T1	July, 2003
Highway Crossing Equipment		
Model 95 Crossing Gate Mechanism	5A1	July, 2003

System or Product	RSE Catalog Section	Revision Date
Model 95-Based Four Quadrant Gate Mechanism System	5A2	July, 2003
HC-120B Flashing Light Units and Assemblies	5B1	July, 2003
Misc. Mast-Related Equipment		
Highway Crossing Masts	5C1	July, 2003
Highway Crossing Mast Mechanical Attachments	5C2	July, 2003
Highway Crossing Bell	5C3	July, 2003
Highway Crossing Gate Arms	5C4	July, 2003
Highway Crossing Gate Arm Counterweights	5C5	July, 2003
Highway Crossing Signs	5C6	July, 2003
Highway Crossing Cantilevers	5D1	July, 2003
Highway Crossing HX -1 Power Pack	5E1	July, 2003
Switch Machines and Associated Equipment		
Style “M” Electric Machines and Associated Equipment		
M-3E and M-23E with Electronic Circuit Controller (ECC)	6A1	July, 2003
Standard M-3 and M-23A/B – With Mechanical Circuit Controllers and ECC Controllers	6A2	July, 2003
Support and Upgrade Equipment for Style “M” Switch Machines	6A3	July, 2003
Electronic Circuit Controller (ECC) Field Test Unit	6A4	July, 2003
A10 Electro-Pneumatic Switch Machine	6B1	July, 2003
YM 2000 Yard Electric Switch Machine	6C1	July, 2003
DA-10 Yard Electro-Pneumatic Switch Machine	6D1	July, 2003
T-20 and T-21 Hand-Operated Switch Machines	6E1	July, 2003
U-5 Circuit Controller	6F1	July, 2003
SL-21A Switch Lock	6G1	July, 2003
SL-6A Switch Lock	6G2	July, 2003
SL-25 Switch Lock	6G3	July, 2003
Misc. Layout Parts/Assys.		
Circuit Controller Operating Rods and Point Detector Lugs for Switch Circuit Controllers	6H1	July, 2003
Switch Lock Lever Lock Rods	6H2	July, 2003
Switch Point Roller Bearing Assemblies	6H3	July, 2003
Swivel Front Rods and Swivel Point Lugs	6H4	July, 2003
Switch Machine and Switch Layout Tools	6J1	July, 2003
Pedestal-Mounted Junction Boxes	6K1	July, 2003
Signals and Associated Equipment		
H-2 Searchlight Signals	7A1	July, 2003
N-2 and N-2S Color Light Dwarf Signals	7B1	July, 2003
ES-20 Color Light Electric Switch Signal	7C1	July, 2003
CR-2 Triangular Color Light Signal	7D1	July, 2003
PL-8 Color Position Light Signal	7E1	July, 2003
Multi-Purpose Color Light Signals	7F1	July, 2003
Transit Signals	7G1	July, 2003
Inclined Cover Glass Assemblies, Phankills Units and Roundels	7H1	July, 2003
Signal Lamps	7J1	July, 2003
Mainline Signal Assemblies	7K1	July, 2003
Cab Signal Products		
Test Equipment		
MicroCab Shop Test Station (STS)	8A1	July, 2003

System or Product	RSE Catalog Section	Revision Date
MicroCab Portable Test Unit (PTU) Software	8A2	July, 2003
MicroCab Portable Test Equipment (PTE)	8A3	July, 2003
Cab Signal Portable Loop (Code0 Tester	8A4	July, 2003
Cab Signal Track Receivers	8B1	July, 2003
Cab Signal Axle Generators and Speed Sensors	8C1	July, 2003
Vital Relays		
PN-159B Vital Carborne Relay	8D1	July, 2003
PP-151 Vital Carborne Relay (Magnetic Stick)	8D2	July, 2003
Decelerometer (Brake Assurance Module)	8E1	July, 2003
Common-Use Cab Signal Components	8F1	July, 2003
Misc. Installation & Service Components		
Misc. Installation & Service Parts	9A1	July, 2003

UNION SWITCH & SIGNAL

Using the US&S RSE Catalog

Your Union Switch & Signal Railway Signaling Equipment (RSE) Catalog is designed to help you find complete technical and ordering information on every US&S major wayside or carborne control system and stand-alone product. Each catalog cut gives concise design and application, detailed specifications, all major ordering part numbers (where applicable), and instructions on how best to place an order to achieve the fastest possible delivery. For any additional information required:

- **Call your US&S Sales Represenative (see page 5)**
- **Contact the US&S Customer Service Center at 1-800-652-7276.**
- **Go to US&S' Internet web site at** www.switch.com

The complete RSE Catalog is also available electronically at US&S' web site (.pdf format) or on CD-ROM; contact our Customer Service Center to obtain CDs.

For ordering information on customized systems without standard part numbers, consult with your US&S Account Executive.

Finding and Ordering Your System or Product

The US&S RSE Catalog is organized according to major wayside and carborne systems, and individual products and components, many of which comprise these systems. Included within the major catalog categories are cuts on specialized tools and test equipment to service US&S equipment. To locate an item:

1. Refer to the RSE Table of Contents (page i) for major system and product divisions.
2. Refer to the alpha-numeric identifier (e,g, ***RSE-4A1***) for each catalog cut. These identifiers greatly simplify updates to the catalog; individual cuts are added or deleted without affecting the entire book.
3. Note the catalog cut revision date in both the Table of Contents and at the upper corner of each cut. As cuts are updated, the revision date is changed accordingly. Check the catalog cut of interest to make sure you have the latest information.
4. Also check the Table of Contents for new product entries as highlighted.



5. When your are ready to place an order, refer to the "Ordering Information" section of the catalog cut. This section gives important information on how best to select the system or product of interest.
6. Where applicable, go to the order (part) number tabulation on the cut to select the desired item. Make sure the descriptor/specifications of that order number are correct for your application. If you do not see the exact product specification needed, contact US&S (Account Exec. or Customer Service) for possible substitutes or special order numbers not listed on the catalog cut.

Placing Your Order and Answers to Questions

- To place your order by phone, call our toll-free Customer Service number **1-800-652-7276** 24 hours per day, seven days per week. Or, send an e-mail to **orders@switch.com**. Feel free to ask our Order Entry person any questions about the order process, the type of part, or the status of any previous orders.
- If placing your order through the U.S. Mail, send your form or inquiry to:

  Customer Service
  Union Switch & Signal Inc.
  645 Russell Street
  Batesburg, SC 29006

- To obtain prices of individual components listed in this catalog, request a copy of US&S' ***2003 Price List***. This document is also available in printed or CD form through your US&S Account Executive or US&S Customer Service.

- All sales of goods by US&S are made solely upon the Terms & Conditions on page 6, as well as any additional terms and conditions that appear on the face of any quotation or order acknowledgment issued by us. *(Note: US&S prices subject to change without notice.)*

Repair and Remanufacturing Services

In addition to production of new systems and components, US&S offers extensive repair and remanufacturing services for most US&S electronic, electro-mechanical and mechanical products, as well as a wide variety of similar non-US&S products. These are detailed in US&S' new "***Service Catalog***", which is available by contacting our Customer Service dept. or your US&S Account Executive, or going to US&S' web site at www.switch.com. Here is a summary of US&S Repair and Remanufacturing Services:

Repair and Return Service

US&S Service Centers are equipped to repair and return all products produced by US&S along with most of our major competitor's S&C equipment.

All repair and return service work is completed utilizing OEM replacement parts. Prices are quoted for most repairs at the time you place your order. Normal turn around time is less than 30 days and all repairs are backed by our warranty program (see page 3).

Remanufacturing Service

All major brands of ground equipment, relays and other mechanical and electro-mechanical products can be remanufactured to "like-new" condition, using OEM parts, for a fraction of their current sales price. All remanufactured ground equipment and relays are backed by an extended 5-year warranty.

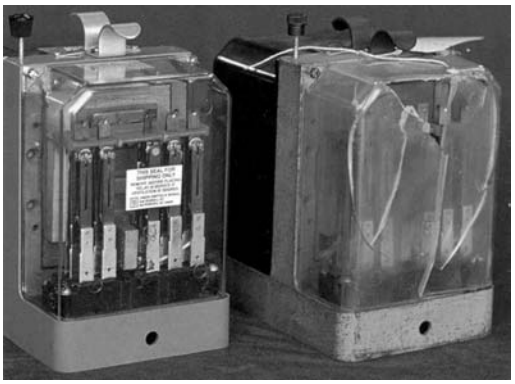

Many other types of S&C equipment – including signals, electronics, cab signaling equipment, etc. - also can be remanufactured to their original functional specifications. For questions regarding your specific remanufacturing needs, please contact a US&S Service Center.

Inspection Service

We can help you maintain the safety and integrity of your signaling and control equipment by conducting field inspections, as well as carrying out the regular, federally mandated inspections of your equipment.

Skilled Field Service Technicians

US&S surpasses the competition with our ability to provide dedicated on-site Field Service Engineering support and "hotline" access to signaling engineers at our Batesburg facility. We provide Field Service Engineers whose specific job is to provide a broad range of on-location technical support to customers in their times of need.

RAIL Team

US&S' "RAIL Team" staff is available for expert consultations 24/7 via our toll-free hotline (1-800-652-7276). The RAIL Team's exclusive job is to pro-vide rapid and precise technical consultations to customers on all types signaling technology and maintenance issues.



Skilled Service Center Technicians

US&S' Service Centers are staffed by teams of highly trained, highly skilled technicians. Many of our technicians have decades of experience in the railway signaling & control industry and they take part in regular training programs to stay current in the latest developments in signaling & control technology. Our technicians' extensive experience cover the following areas:



- Electro-mechanical relays
- Switch machines and other related ground equipment
- Electronics ranging from analog to digital to microprocessor technologies
- Cab signal equipment
- End-of-Train equipment and systems
- Highway crossing equipment and systems
- US&S has certified its electronics technicians in all detailed repair techniques such as surface-mount component repair and soldering.

Technicians are equipped with a wide array of state-of-the-art tools, ESD workstations for electronic re-manufacture and correctly calibrated and certified test instruments to ensure the re-manufacturing process is completed accurately and efficiently.

If a short-duration demand for increased volumes of re-manufactured products occurs, US&S has the ability to used trained personnel from other parts of the manufacturing organization to meet any need.

Training

We offer operation, repair, calibration and FRA-mandated field-test training classes for most types of S&C equipment - including relays, highway crossing systems, ground equipment and various electronic products. We also can customize training classes to meet your specific needs.

Warranty

- Warranty on all ground equipment and relays is five (5) years from shipment date.
- Warranty on electronic equipment is one (1) year from shipment date.

Returned Material Authorization Procedure

Use of the following Return Material Authorization (RMA) procedure will enable you to return equipment to Union Switch & Signal. Following this procedure will help prevent processing errors, shorten the repair cycle and may eliminate the need for the return.

1. Obtain the following information:
   - Serial number of the unit.
   - Part number of the unit.
   - Unit description.
   - Complete description of failure symptoms or remanufacturing services requested.
2. Call US&S Service Shop at 1-800-652-7276 (US) or 1-800-665-9347 (Canada).
3. Request an RMA number.
4. Provide the following information to our Service Representatives.
   - Your name.
   - Company.
   - Information obtained under item 1 above.
   - P. O. number (required for non-warranty items only).
5. Pack the failed unit for shipment.
6. Write the RMA number on the outside of the shipping carton (ATTN: "RMA NUMBER") and ship the unit (freight prepaid) to the appropriate address listed on page 3.

About Union Switch & Signal

Union Switch & Signal Inc. has been the internationally recognized leader in railway signaling automation and control for more than 120 years. The company is a leading manufacturer of high quality relays and timers, track circuit control and ground equipment, switch machines and switch support equipment, all manner of wayside signals, carborne detection, control and display equipment and the full range of highway crossing devices. In every product area, US&S has made notable technological advances, in particular, new solid-state and software-controlled devices that greatly reduce hardware requirements and operating costs over traditional equipment designs.

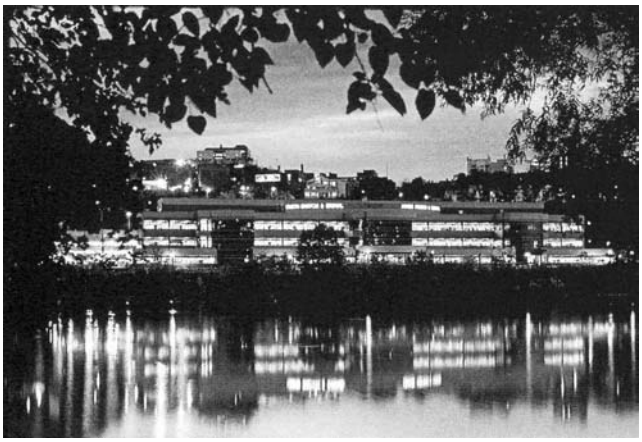

US&S complements its exceptional product design and manufacturing capabilities with equivalent expertise in systems integration. US&S mainline, transit and classification yard control systems manage tens of thousands of vehicles and train operations per day over hundreds of thousands of track miles. This achievement is made possible by a team of engineers and project management specialists who are masters of railway design and implementation.

Product/System Capabilities

US&S provides quality systems, products and services for all segments of the railway industry including mainline and local freight railroads, inter-city passenger railroads, heavy-rail commuter lines, light rail transit systems, people movers, industrial and mining railroads. US&S has achieved extensive experience in all aspects of railway control, including:

- Wayside signaling systems;
- Continuous and intermittent cab signaling systems and their wayside interfaces;
- End-of-train monitoring and control systems;
- Code communications systems between the central office and wayside locations;
- Central Traffic Control (CTC) systems for mainline railroad operations;
- Operations Control Center (OCC) systems for urban transit system operations;

The above systems and equipment are provided as individual elements of larger railway system developments, or collectively as a total or “turnkey” system. US&S equipment and systems are currently operational in all regions of the United States, as well as Canada, Mexico, South America, Korea, China, Taiwan, Australia, Scandinavia and Western Europe.

Quality Assurance

The US&S Quality Management System conforms to the ANSI/ISO/ASQ Q9001-2000: Quality management systems- Requirements, for “The Design, Development, Production, Installation and Servicing of Signaling and Control Components and Systems For The Transportation Industry”. Certification to the ISO 9001 Standard was awarded by Det Norske Veritas (DNV) who is accredited by the Registrar Accreditation Board (RAB) which is associated with the American National Standards Institute (ANSI). The US&S Quality Management System has been registered to the ISO 9001 Quality System Standard since August 1992.

Facilities

US&S conducts all of its design and production operations at three facilities in the United States: The Pittsburgh Technology Center (PTC) in Pittsburgh, Pennsylvania, the Batesburg Manufacturing and Customer Service Center in Batesburg, South Carolina, and the East Coast office in Princeton Junction, NJ. In addition to these facilities, the company operates a Customer Service & Re-manufacturing center in Kingston Ontario, Canada and a Customer Service & Re-manufacturing Center in Kansas City, KS.

Corporate Family

Union Switch & Signal is a wholly-owned subsidiary of Ansaldo Signal N.V., a Netherlands-based company that was formed in 1997 to create a single global organization composed of strategically located operating companies that serve railways worldwide. In turn, Ansaldo Signal N.V. is part of Finmeccanica, a publicly traded Italian-based holding company with operations in transportation, defense and energy.

US&S Service Centers and Headquarters



Batesburg Service Center
645 Russell Street
Batesburg, SC 29006
800-652-7276

Kansas City Service Center
10563 Lackman Road
Lenexa, KS 66215
913-438-3968
800-889-8679

Kingston Service Center
638A Fortune Crescent
Kingston, Ontario, Canada
K7P 2T3
800-665-9347

e-mail any US&S Service Center at:
serviceshop@switch.com

US&S Field Sales Offices

John Cerrone - New York
Account Executive
78 Lake Road
Ballston Lake, NY 12019
Phone: 518-371-2405
Fax: 518-371-2413
Cell: 518-441-3498

Jack Dickens - Florida
Account Executive
151 Comers of Sawgrass, Suite 204A
Ponte Vedra B., FL 32082
Phone: 904-280-5935
Fax: 904-280-5936
Cell: 904-613-7713

Larry Luzynski - Omaha
Account Executive
8998 L. Street, Suite 129
Omaha, NE 68127
Phone: 402-932-0895
Fax: 402-932-2966
Cell: 816-809-5468

Richard I. Duncan - Canada
Account Executive
5165 Sherbrooke Street West
Suite 213
Montreal, QC H4A 1 T6
Phone: 514-369-0036
Fax: 514-369-0033
Cell: 514-212-4105

Joachim Ortiz - California
Account Executive
9687 Church St.
Rancho Cucamonga, CA 91730
Phone: 909-989-0520
Cell: 909-236-3965
Fax: 909-989-1061

Kurt Tamenne – New Jersey
Account Executive
Suite 722, 14 Wash. Rd.
Princeton Junc., NJ 08550
Phone: 609-716-9325
Fax: 609-716-9441
Cell: 215-327-7147

Jack Wilson - Kansas City
Account Executive
10563 Lackman Rd.
Lenexa,KS 66215
Phone: 913-438-3967
Fax: 913-438-8415
Cell: 913-530-7599

Frank Pohle - Chicago
Account Executive
455 S. Frontage Rd. Suite 102
Burr Ridge, IL 60521
Phone: 630-323-3969
Fax: 630-323-5975
Cell: 630-240-1825

George W. Rudge
Director, Railroad Sales
645 Russell Street
Batesburg, SC 29006
Phone: 803-532-7631
Fax: 803-532-7632
Cell: 412-980-9735

David M. Nelson
Manager, Systems Marketing
5908 Centerwood Drive
Crestwood, Ky 40014
Phone: 502-243-3646
Fax: 502-243-3646

Terms & Conditions of Sale

All sales of goods by us are made solely upon the following terms and conditions as well as any additional terms and conditions that appear on the face of any quotation or order acknowledgment issued by us:

1. **ORDERS**: A binding contract will be formed only when your order is accepted in whole or in part by us. Terms and conditions on your order form at variance with or in addition to terms and conditions stated herein are binding upon us only if specifically accepted by us in writing. Your assent to these terms and conditions, and to the terms and conditions contained in our acceptance of your order, shall be presumed conclusively from your failure to object in writing within 30 days after receipt of our acceptance or from your acceptance of all or part of the goods hereunder. After acceptance. you may modify or cancel your order only upon written notice and payment to us of our costs resulting therefrom Any order amounting to less than$50.00 will be billed at$50.00.

2. **PRICE**: Unless otherwise stated prices are net F.O.B. our factory, exclusive of transportation and insurance, and are firm for thirty (30) days. Shipments will be billed at prices in effect on the date that we accept your order. Published prices are subject to change without notice and quoted prices are subject to adjustment if specifications or delivery requirements are changed after price is quoted.

3. **TERMS OF PAYMENT**: Unless otherwise stated, payment will be made within thirty (30) days after receipt of invoice. Invoices will be issued, (a) upon receipt of your order for ten percent (10%) of the order value, (b) upon our receipt of major items of equipment (such as computers) from our suppliers, (c) upon shipment of goods to you. and (d) monthly, for the portion of engineering performed during the preceding month. For each thirty (30) days or part thereof that an invoice remains overdue, you will be charged interest on the unpaid balance at the maximum lawful rate. Partial shipments may be made at our option. If all items are not shipped on the same date, pro rata invoices will be rendered.

   If you are responsible for any delay in shipment, the date of completion of goods may be treated by us as the date of shipment for purposes of payment. Completed goods shall be held at your cost and risk and we shall have the right to bill you for reasonable storage and insurance expenses.

4. **TAXES**: Prices exclude all duties, taxes or other governmental charges which now are or hereafter may be imposed upon the sale or use of the goods herein. All such taxes or other charges paid by us shall be for your account and shall be added to the prices set forth herein. Any exemption claimed from the application of such taxes or charges should be plainly designated on the face of the orders placed with us and accompanied by exemption certificates where the law so requires.

5. **DELIVERY**: Shipment, delivery, and installation dates are estimated dates only and unless otherwise specified are calculated from the date of receipt of complete technical data and approved drawings, as appropriate. In estimating such dates no allowance has been made nor shall we be liable directly or indirectly for delays of carriers or delays from labor difficulties, shortages, strikes or stoppages of any sort, fires, accidents, failure or delay in obtaining materials or manufacturing facilities, acts of government affecting us directly or indirectly, bad weather, or any cause beyond our control or causes designated as Acts of God or force majeure by any court of law and when such delays arise, the estimated delivery date shall be extended accordingly. We will not be liable for any damages or penalties whatsoever, whether direct, indirect, special or consequential, resulting from our failure to perform or delay in performing unless otherwise agreed in writing by an authorized officer or his designee.

   The date of delivery is the date of delivery by us to the initial carrier and as of this date, risk of loss is transferred to you. You are solely responsible for claims for loss or damage in transit. Claims for errors or shortages in shipments must be submitted to us, with adequate substantiation, within thirty (30) days after receipt.

6. **TITLE**: Except as otherwise agreed in writing, title to the goods or any part thereof shall pass to you as soon as all payments due have been fully made in cash. The goods shall be and remain personal or movable property, notwithstanding their mode of attachment to realty or other property. If default is made in any of the payments. we may retain all payments which have been made on account of the purchase price (up to 30% thereof) as liquidated damages and we shall be entitled to the immediate possession of the goods and shall be free to enter the premises where the goods may be located and remove them without prejudice to our right to recover any further expenses or damages which we may suffer by reason of non-payment.

7. **SOFTWARE**: We hereby grant to you a non-exclusive non-transferable right to use the software (which shall mean and include programs data base and related technical documentation), if any, which may be furnished by us with or may be incorporated in the goods supplied hereunder. The software is our proprietary information which you shall keep confidential. You shall assist in protecting the software by permitting inspection of any location where the software is used or kept and by notifying us promptly upon discovering unauthorized possession use or knowledge of the software.

   The software may be used only in accordance with our instructions and with the goods supplied hereunder and may not be copied or modified without our prior written approval.

   The license granted hereby shall remain in force until the use of the goods supplied hereunder ceases, or until terminated by written notice for your failure to perform any obligation hereunder, your attempt to transfer this license or your insolvency or bankruptcy. Upon termination you shall immediately cease using the software and return the software to us.

8. **WARRANTY**: Items of equipment and parts manufactured by us are warranted to conform to our published specifications and to be free from detects in workmanship and material under normal and proper use and service. We will repair or replace, at our option and expense, and return to you, F.O.B. our factory, transportation charges prepaid, any such item or part which breaches this warranty within one (1) year after shipment to you, provided that you promptly give notice to us of such breach, return such item or part to us, transportation charges prepaid, with a completed Return Material Report, and upon examination we confirm said breach. Items of equipment and parts manufactured by others and furnished by us are warranted only to the extent of the original manufacturer's warranty.

   System designs and software (it any) furnished by us for this order are warranted to conform to our published specifications therefor or to the technical description prepared by us for this order. We will correct at our expense any defect in said design or software that results in a breach of this warranty under normal and proper use and service within one (1) year after first placing the design or software in service, provided that you promptly give written notice to us of such breach and you can recreate, under actual operating conditions, the condition which constitutes the alleged breach.

   All warranties shall be void and we shall not be responsible for any item, part, design or software that, after shipment or installation, is altered, tampered with, or repaired by anyone except personnel authorized by us; that is used under conditions varying materially from existing industry standards; that is damaged or fails to operate properly due to abrasion, corrosion or the influence of foreign energy or matter; or that proves unsuitable in an application of your choosing or a system of your design.

   An item, part, design or software which is repaired, replaced or corrected hereunder is warranted only for the remainder of the original warranty period. If repair, replacement or correction of a part of an item, design or software eliminates a warranty related problem, then the item, design or software will not be condemned hereunder.

   The foregoing obligations are expressly in lieu of all other warranties, guarantees, obligations or liabilities, express or implied by statute or otherwise. IN PARTICULAR THERE SHALL BE EXCLUDED THE IMPLIED WARRANTY OF MERCHANTABILITY AND THE IMPLIED WARRANTY OF FITNESS FOR A PARTICULAR PURPOSE. We shall not in any event be liable for any cost or expense, including labor, in connection with removal or reinstallation; for indirect, incidental or consequential damages of any kind; nor for any claims arising out of the supply or use of items, designs or software furnished hereunder, except as set forth herein.

9. **REJECTIONS/RETURNS**: Goods may be rejected for cause only if you notify us in writing within thirty (30) days after delivery. Failure to provide such notification constitutes acceptance of the goods. Only orders for standard goods may be canceled and only standard goods may be returned.

   No goods may be returned more than 30 days after the date of delivery except with our written consent. An order for standard goods may be canceled prior to delivery and, if the box, container or packaging is unopened. standard goods may be returned within 30 days after delivery, subject to a cancellation charge of 15% of the order value. If the box, container or packaging has been opened, standard goods may be returned within 30 days after delivery, subject to a cancellation charge of 25% of the order value.

10. **PATENTS**: We will indemnify you from claims, suits, or actions by third parties that any item, or any part thereof, sold by us to you in and of itself infringes any United States patent if, within thirty (30) days, you notify us in writing of any such claim and give us authority, information, and assistance (at our expense) to dispose of such claim, and to defend any suit that may be brought against you thereon. In that event we will, at our expense, defend any such suit and satisfy any judgment therein to an amount not exceeding the price paid us for said item held to infringe. If, in any such suit, an injunction is issued against the further use of said item or any part thereof, we will at our option and expense, either procure for you the right to continue using said item or will (it you give, at our expense. such assistance as may be reasonably requested) replace the same with non-infringing items or modify it so that it becomes non-infringing or remove said item and refund the purchase price and the transportation and installation costs thereto. The foregoing expresses all of our obligations and liabilities as to patents.

11. **INSPECTION AND TESTS**: Inspection of goods in our plant by you or your representative will be permitted provided that this does not interfere with production and details of the proposed inspection are submitted to us in writing in advance. Goods and components thereof will be tested in accordance with our standard quality assurance procedures. It acceptable to us, additional tests may be conducted at your expense.

12. **SPECIAL JIGS, FIXTURES AND PATTERNS**: Unless supplied by you, any jigs, fixtures, patterns, design engineering and the like which are used for your order will remain our property without credit to you. We will have the right to discard and scrap them after they have been inactive for one (1)year without credit to you provided that you are given notice and opportunity to buy them before discarding or scrapping.

13. **RECORDS, AUDITS AND PROPRIETARY DATA**: Unless otherwise specifically agreed to in writing signed by an authorized officer, neither you nor any representative of yours, nor any other person shall have any right to examine or audit our cost accounts, books or records of any kind or on any manner, or be entitled to or have control over any engineering or production prints, drawings or technical data which we, in our sole discretion, may consider in whole or in part proprietary to ourselves.

14. **APPLICABLE LAW**: The right and duties of the parties shall be governed by the laws of the Commonwealth of Pennsylvania.

2003 New Product Highlights

US&S' large roster of railway signaling products and systems continues to grow. Highlights for 2003 include:

- MicroLok® II Multi-Purpose Vital/Non-Vital Controller with expanded hardware options and software capabilities (see ***RSE-1A1***)
- E-Code™ enhancement to MicroLok II for interfacing US&S MicroLok/MicroTrax® track circuits to ElectroCode® track circuits (see ***RSE-1A2***)
- i-Lok™ System, a cost effective product for controlling track circuits and signals at mainline intermediate signal locations (see ***RSE-1C1***)
- AF-900® Series Digital FSK Track Circuits for reliable train detection and highly efficient uploading of cab signal data to closely-spaced transit vehicles (see ***RSE-1F1***).
- MicroCab® Cab Signal System, which provides dependable and flexible reception, processing and display of vital cab signal commands to both locomotives and transit cars (see ***RSE-2A1***).
- Advanced Speed Enforcement System (ASES®) and i-Cab™, which use state-of-the-art wayside transponders to deliver a wide of variety of data to moving trains and help ensure train stop when commanded (see ***RSE-2B1*** and ***2B2***).
- Digitair® End-of-Train System, for consistent transmission of railroad last-car brake pipe pressure to the locomotive cab, and permit emergency actuation of last-car brakes (see ***RSE-2D1***).
- SML and SMC Series all-electronic switch locks, which enable direct control of switch machines without conventional electro-mechanical relays (see ***RSE-3A1***, ***3A2*** and ***3A3***).
- Direct Solid-state replacements for many traditional US&S and non-US&S electro-mechanical relays, eliminating the calibration and maintenance procedure of the earlier relays (see ***RSE-4A1***).
- Highway Crossing Quad Gate system, which helps ensure that no motorist is trapped between dropped gate arms at a crossing (see ***RSE-5A2***).
- Electronic-Circuit Controller (ECC) enhancements and retrofit kits for US&S' popular M-3, 23A and M-23B electric switch machines, which eliminate the maintenance demands of older mechanical units (see ***RSE-6A1*** and ***6A2***).

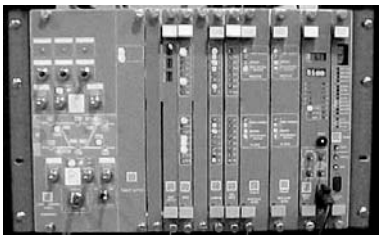

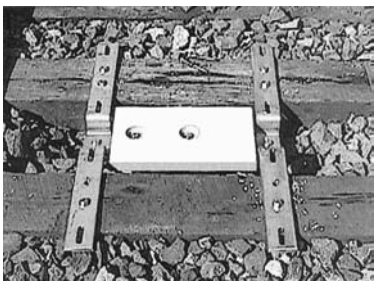



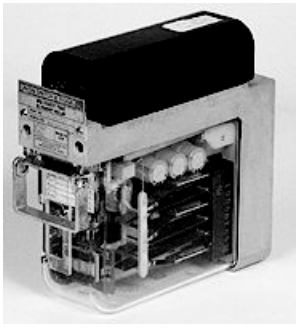







UNION SWITCH & SIGNAL



Wayside Control Systems

MicroLok II, ECode and I-Lok Systems

- MicroLok II Wayside Control System - General Information
- E-Code Track Circuit System
- i-Lok Track Circuit System

MicroLok II, ECode and i-Lok Major Components

- Cardfiles
- Plug-In PCBs and Front Panels
- Track Interface Panels
- Quick Shunt Module
- AC Lamp Driver Module, Hot Filament Checker and and Redundancy PCB
- Isolation Module
- Vital and Non-Vital Serial Link Interface Units
- Vital Cut-Off and Power-Off Relays
- Solid-State Switch Machine Modules and Associated Equipment
- MicroLok II, E-Code and i-Lok Software

AF-900 Series Digital FSK Track Circuits

- General Information
- Major Components

UNION SWITCH & SIGNAL

RSE-1A1
Rev. 7-03

MicroLok® II Wayside Control System
General Information

Wayside signaling and control systems typically consist of vital control logic, non-vital control logic and data transmission, and track circuits. These wayside control elements historically have been implemented with relays and later with dedicated electronic components.

Depending upon the particular application, wayside control systems could be quite complex with large quantities of relays and/or electronic components wired into wayside bungalows and control cases.

To simplify wayside control system installations while increasing their capabilities, flexibility and economy of installation and operation, Union Switch & Signal has consolidated vital and non-vital control logic, data transmission and coded track circuits into a single package with the MicroLok® II Wayside Control System.

General Description

The US&S MicroLok II Wayside Control System has the flexibility and all of the capabilities required to control wayside configurations ranging from an end-of-siding to a double-track universal crossover. It combines vital logic, non-vital logic and coded track circuits into one easy-to-maintain card file, capable of efficiently performing a number of diverse functions, including:

- Signal lighting.
- Vital interlocking control.
- Train detection.
- OS track circuits.
- Coded track messaging.
- Code system for non-vital control and indications.
- Cab signaling.
- Event recording.

Vital Control Logic

The MicroLok II system eliminates nearly all of the vital relays that traditionally have been required for wayside signaling and control. Its vital logic is based on the US&S MicroLok Vital Interlocking Control System that has proven its reliability in railroad and rail-transit

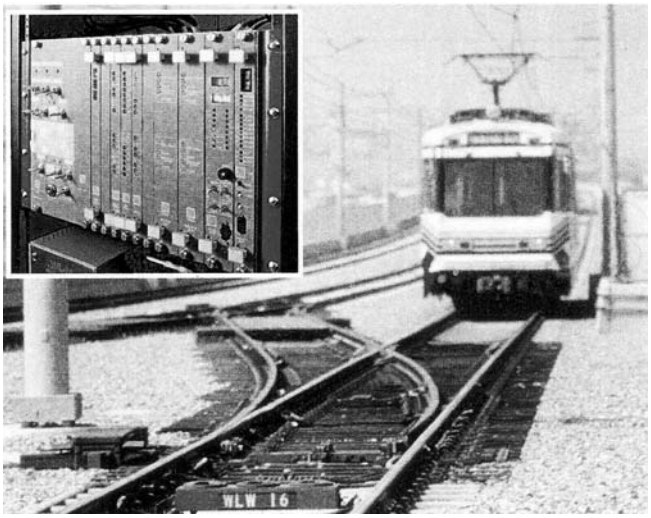

applications, both domestically and internationally, since its introduction in the 1980s. The MicroLok II system's vital logic has been upgraded to take advantage of the latest processing technology.

Non-Vital Control Logic

The US&S Genisys® 2000 non-vital logic controller has been repackaged for insertion in the MicroLok II system card file. This enables non-vital logic and data-transmission functions to be executed by the MicroLok II system, and it separates vital logic from non-vital logic in order to reduce testing time. The Genisys 2000-based non-vital logic is compatible with other systems, such as the GRS (Alstom) Datatrain I/II and Harmon MCS-1 communication systems, along with PTS, ARES and ATCS systems.

Coded Track Circuits

Coded track circuit capability is provided by the inclusion of US&S MicroTrax® Coded Track Circuit printed circuit board (PCB) cards. Two PCB cards can provide coded track circuits for the approaches at a double-track universal crossover.

A new enhancement to the MicroLok II Wayside Control System is the E-Code™ d.c.-coded track circuit, which enables the MicroLok II system, when so equipped, to be fully compatible with Electrocode 5 and all previous generations of Electrocode.

UNION SWITCH & SIGNAL

RSE-1A1
Rev. 7-03

MicroLok® II Wayside Control System
General Information

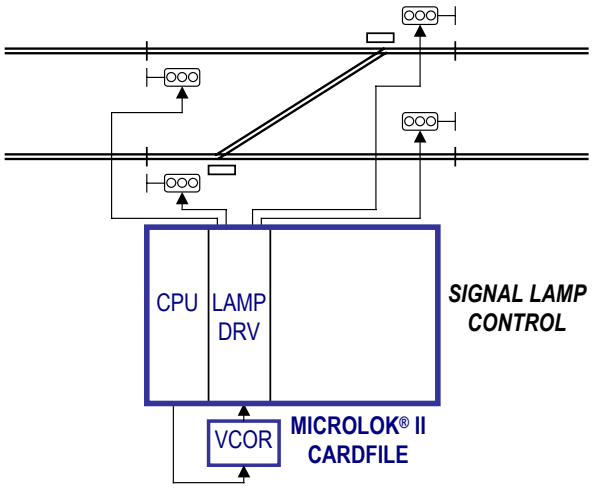

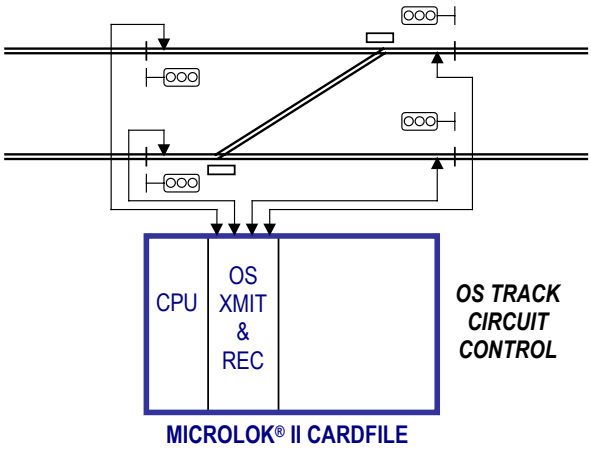

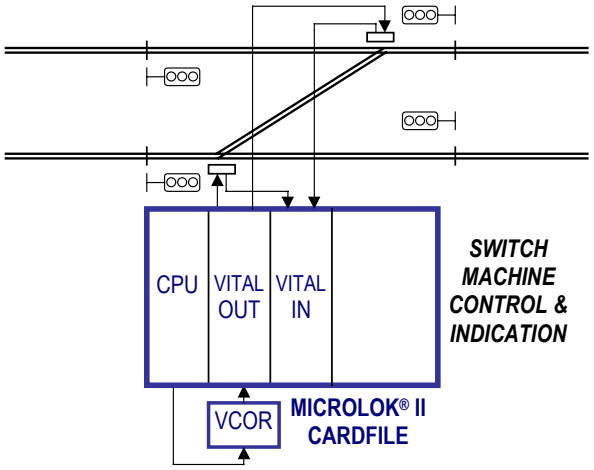

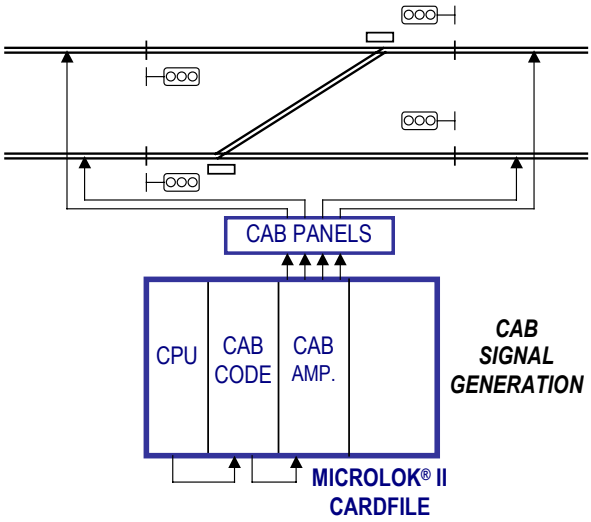

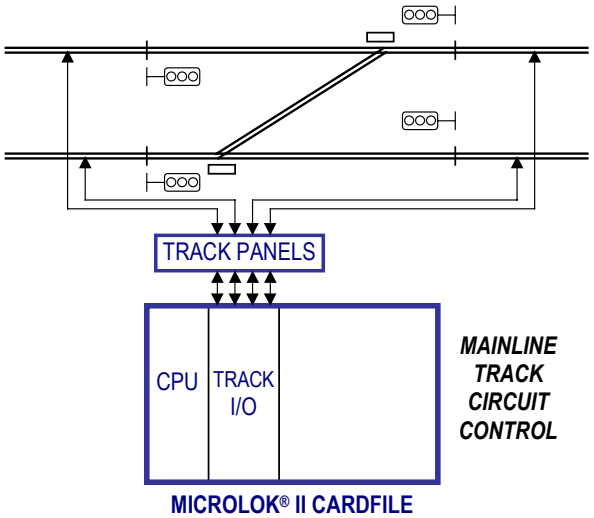

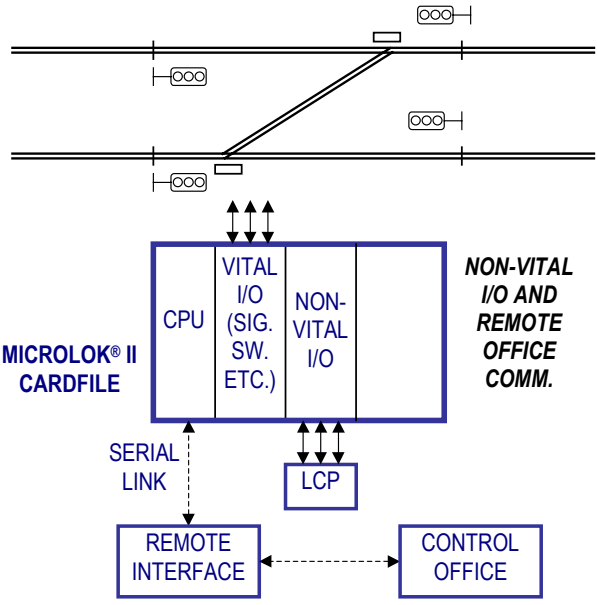

MicroLok® II Wayside Control System
General Information

UNION SWITCH & SIGNAL

RSE-1A1
Rev. 7-03

Advantages

- Direct drive of a.c. lamps.
- Hot-filament checking of signal lamps.
- Direct drive of color-light, position-light and searchlight signals.
- Direct drive of searchlight-signal mechanisms.
- E-Code d.c.-coded track circuit.
  - Compatible with Electrocode.
  - 60-Hz interference immunity.
  - Compatible with highway-crossing audio-frequency overlay track circuits.
  - One-person adjustment without any instrumentation.
- OS track circuits.
- Boolean Logic or Ladder Logic programming.
- Logic-table programming from route and aspect charts.
- Windows®-based development system.
  - Maintenance tool.
  - Application-logic compiler.
  - Reverse application-logic compiler.
  - Application-logic comparison tool.
  - Enables user to write, compile and check application-logic source files.
- Diagnostics via alpha-numeric displays and PC serial link.
  - Serial-link downloading of application program.
- Numerical operations.
- Conditional statements.
- User-specified event logging.
- Data scope and statistical data collection.
- Built-in data logging (PCMCIA expansion).
- Flash memory.
  - No EPROM burner or eraser necessary.
- Variable names held in flash memory.
- Functional equivalent of 4095 relays with 50 contacts/relay.
- Functional equivalent of 400 adjustable timers.
- Internal track-circuit code generators.
- Elimination of switch-machine control relays.

Hardware Characteristics

System Cardfile

The MicroLok II Wayside Control System is managed by a compact but versatile System Cardfile, which contains all vital and non-vital logic (hardware and software), as well as interfacing circuits. This cardfile utilizes plug-in PCB and contains slots for up to 20 PCB cards, although not all of the slots is required for every application. Each card plugs into a common back-plane mother-board, which distributes circuit-board operating power and CPU control commands. Refer to ***RSE-1D1*** and ***RSE-1D2*** for additional details and component ordering information.

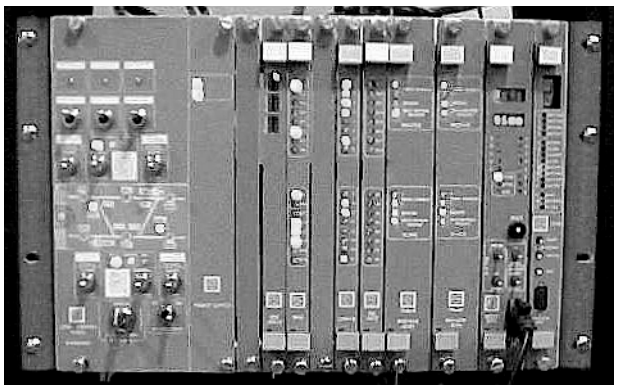

Peripheral Equipment

The MicroLok II system is supported with the complete range of peripheral equipment to enable simple and effective interfacing with all manner of external equipment such as track circuits, signals, switch machines and non-vital serial communications channels:

- Track Interface Panels for dc coded track circuits, Cab Signal Interface Panels for applying cab signals to the rails, and a special-purpose E-Code Track Interface Panel for connecting E-Code signals to Electrocode-based track circuits. Refer to ***RSE-1D3*** for additional details and ordering information.
- AC Lamp Driver Module (and associated units) to enable MicroLok II control of AC-powered wayside signal lamps. Refer to ***RSE-1D4*** for additional details and ordering information.
- Quick-Shunt Module for heavy-traffic MicroLok II dc track circuits where extra-fast train detection response times are needed for close headways. Refer to ***RSE-1D5*** for additional details and ordering information.

UNION SWITCH & SIGNAL

RSE-1A1
Rev. 7-03

MicroLok® II Wayside Control System General Information

- Isolation Modules to provide the equivalent of double-break circuit protection where the system is controlling vital relays or interfacing line circuits in a separate equipment house or case. This device can also be used to create a vital bi-polar output from two single break standard outputs. Refer to ***RSE-1D6*** for additional details and ordering information.
- Serial Communications Interface Units:
  - Serial Link Isolator Unit to protect the communications lines between the MicroLok-II CPU PCB, or the CIS PCB, and the external code system from voltage transients
  - Serial Communications Adapter Panel to protect vital serial communications between MicroLok-II systems (or other systems) that are contained in separate wayside houses or cases.
  - Refer to ***RSE-1D7*** for additional details and ordering information.
- Relays:
  - Vital Cut-Off Relay (US&S PN-150B) to control power to all vital outputs (under command of vital CPU logic).
  - Power-Off Relay to report loss of external commercial power (that feeds signaling battery circuits) to the MicroLok II system.
  - Refer to ***RSE-1D8*** for additional details and ordering information.
- SML Series Solid-State Switch Locks that enable MicroLok II to directly drive switch machines without the need of traditional switch control relays. Refer to ***RSE-1D9*** for additional details and ordering information.



Software and Programming

Like all of the US&S microprocessor-based products before it, the US&S MicroLok II Wayside Control System is designed to be programmed by the end-user. A wide variety of programming options are available. Refer to ***RSE-1E1*** for additional details and ordering information.

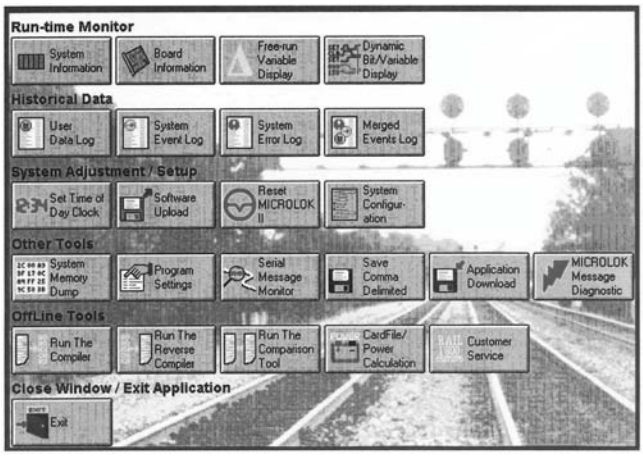

Application

The functional capabilities and flexibility of the MicroLok II Wayside Control System make it the ideal choice for a wide variety of wayside signaling and control applications.

- Direct control of wayside signals.
- Switch-machine control and switch-point position monitoring.
- Switch-lock position monitoring.
- Monitoring of mainline track circuits.
- Through-the-rails communications to adjacent wayside control systems.
- Monitoring of interlocking OS track circuits.
- Cab-signal carrier/code generation.
- Line-wire communications interface.

Non-vital (code line) communications to remote office.

- Local manual control of wayside signals and switch machines for maintenance and contingency operations.
- Vital serial communications to other compatible interlocking control and coded track circuit systems.
- Non-vital controller logic.

MicroLok® II Wayside Control System General Information

The MicroLok II system also provides vital processing for US&S' new Four-Quadrant Gate Mechanism system, which prevents motor vehicles from being trapped between entrance and exit gates when these gates are dropped by an approaching train. Refer to ***RSE-5A2*** for additional details.

Additional Information: Specifications, Ordering, Service Manuals

- Refer to these RSE catalog sections for additional specification data on the MicroLok II system:
  - System Cardfile: ***RSE-1D1***
  - Plug-in PCBs and panels: ***RSE-1D2***
  - Track Interface Panels: ***RSE-1D3***
  - AC Lamp Driver Module: ***RSE-1D4***
  - Quick Shunt Module: ***RSE-1D5***
  - Isolation Modules: ***RSE-1D6***
  - Serial Interface Units: ***RSE-1D7***
  - VCOR and Power-Off Relays: ***RSEs 1D8, 4E1***.
  - SML-Series Switch Locks: RSEs ***1D9, 3A1, 3A2, 3A3, 4C1***
- For additional detailed data, spare parts ordering information and service manuals on the MicroLok II system, contact your US&S Account Executive or go to www.switch.com
- Request US&S' SM-6800-series service manuals for additional information on the MicroLok II system.

MicroLok®, MicroTrax® and Genisys® are registered trademarks of Union Switch & Signal Inc.
E-Code™ is a trademark of Union Switch & Signal Inc.
Windows® is a registered trademark of Microsoft Inc.

UNION SWITCH & SIGNAL

Wayside Signaling Systems

UNION SWITCH & SIGNAL

RSE-1B1
Rev. 7-03

E-Code™ Track Circuit System

When it was introduced in 1999, the Union Switch & Signal MicroLok® II Wayside Control System was the first microprocessor-based controller to combine vital logic, data transmission, non-vital logic and electronic coded track circuits into a single package capable of controlling applications as complex as a double cross-over.

The benefits of the MicroLok II Wayside Control System, however, could not be realized in territory where Electrocode™ coded track circuits were installed because they were not compatible with the MicroLok II control system.

To enable the MicroLok II Wayside Control System to be compatible with Electrocode track circuits and to be economically applied in Electrocode-equipped territory, Union Switch & Signal has developed the E-Code™ Coded Track Circuit System.

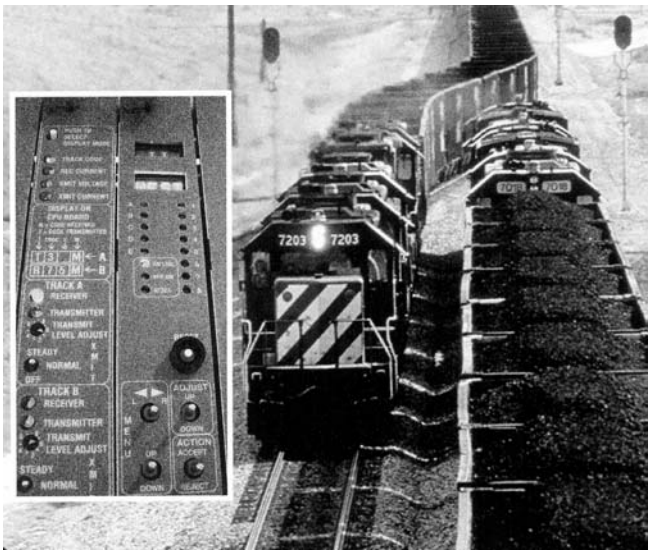

General Description

The new US&S E-Code Coded Track Circuit System makes the US&S MicroLok II Wayside Control System fully compatible with all versions of Electrocode coded track circuits. By enabling the MicroLok II Wayside Control System to be installed in territory equipped with current and past generations of Electrocode track circuits, the E-Code track circuit allows the benefits of the MicroLok II system's diagnostic and maintenance tools, user-interface features and data-recording functions to be realized system-wide, without application constraints.

E-Code supplements the MicroLok II system with of two E-Code-specific elements: A Track PCB and an Track Interface Panel. The Track PCB interfaces with the CPU board, where the functions of track messaging and train detection are performed. Both the Track PCB and the Interface Panel are dual-function units designed to handle two independent track circuits. The Interface Panel is designed for compatibility with highway crossing audio overlay equipment, and provides immunity to 60 Hz interference. The unit also provides secondary surge protection. It is functionally and mechanically equivalent to the Electrocode 5 (EC5) Track Interface Panel (TIP-2).

Advantages

- Track circuits are terminated at low impedance to minimize the effect of ballast variations.
- Reliable track communication and train detection.
- Provides reliable operation independent of received current above the operating threshold of 0.5 amperes.
- Shunt detection time of 6.3 seconds (maximum); track restore time is based on receipt of four messages.
- Slower restore time allows for proper operation of stick logic, which is dependent on an orderly progression of track circuit occupancy.
- Adjustment and performance of the track circuit can be reviewed easily without requiring instrumentation or a need to interrupt the track circuit.
- Transmitter output voltage can be adjusted without interrupting track circuit communications.
- Application programming using Boolean expressions or ladder logic diagrams.
- Reverse compiler and logic-comparison tools.

UNION SWITCH & SIGNAL

E-Code™ Track Circuit System

RSE-1B1
Rev. 7-03

Basic E-Code Applications

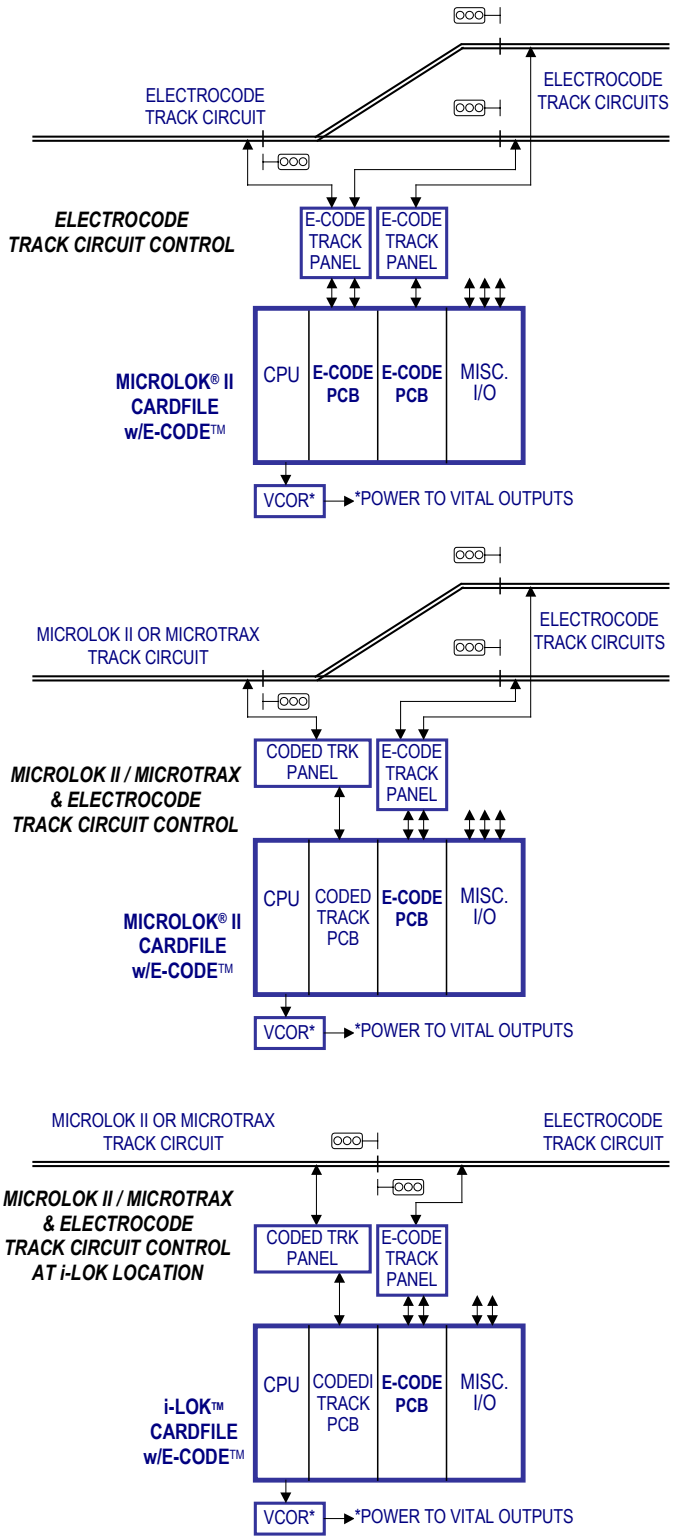

E-Code Track Circuit PCB

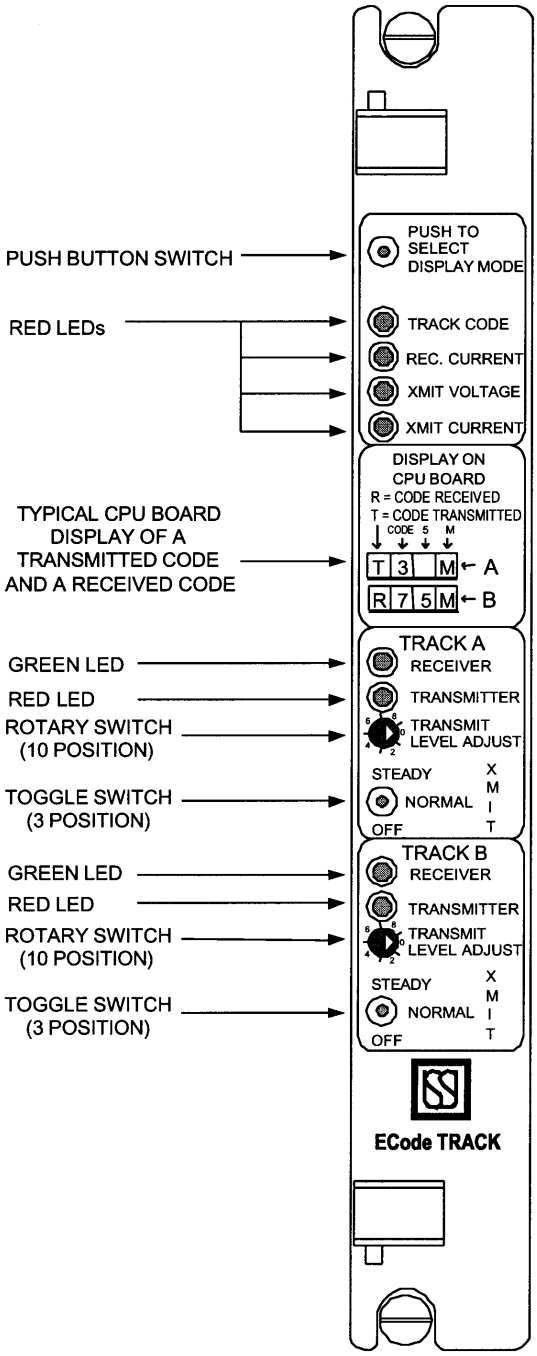

E-Code™ Track Circuit System

UNION SWITCH & SIGNAL

RSE-1B1
Rev. 7-03

Application

The E-Code Coded Track Circuit System allows the MicroLok II type hardware and application software to support MicroTrax® and E-Code track circuit formats simultaneously. This provides a transitional bridge between Electrocode territory and MicroTrax territory without the need for additional hardware.

- Track circuit adjustments are easily made by one person and require no instrumentation.
  - A 10-position selector switch on the front panel of the E-Code PCB enables transmitter output voltage to be set in accordance with adjustment tables, which specify the voltage output for each increment of track circuit length.
- A menu-express push-button on the track board immediately changes the two 4-character displays on the CPU board to indicate the codes being transmitted and received.
  - Repeat pressing of the push-button cycles through displays indicating received current, transmitted voltage and transmitted current.
- A 3-position (STEADY, OFF and NORMAL) transmitter toggle-switch is available for each track circuit for trouble-shooting purposes.
  - STEADY position: Transmitter output steady 1V
  - OFF position: Transmitter is deactivated and receiver is activated continuously.

Other Hardware Elements

Apart from the E-Code-specific Track PCB and Track Panel, the E-Code system shares common hardware with the basic MicroLok II system product family:

- Cardfile - E-Code uses the identical 20-slot cardfile of the original MicroLok II system, the same mounting options and the same types blank front panels for any unused cardfile slots. Refer to ***RSE-1D1*** and ***RSE-1D2*** for additional information.
- CPU PCB - The standard MicroLok II CPU board is utilized in the E-Code system to perform vital logic functions, monitor internal and external system operation, respond to faults, store event and error data for user retrieval, and host the user's application-specific logic. Refer to ***RSE-1D2*** for additional information.
- Misc. I/O and Lamp Driver PCBs - As required by the application, the E-Code system can be equipped with any of the vital or non-vital input/output PCBs or signal lamp drivers from the MicroLok II product family. Refer to ***RSE-1D2*** for additional information.
- Power Supply PCB - PCB operating power is furnished by the standard MicroLok II Power Supply PCB, which regulates and converts wayside battery to proper levels for system internal circuits. Refer to ***RSE-1D2*** for additional information.
- Vital Cut-Off Relay (VCOR) – The US&S PN-150B switches power to all E-Code vital outputs, under the vital control of the CPU PCB. Refer to ***RSE-1D8*** and ***RSE-4E1*** for additional information.
- Quick-Shunt Module – In areas with heavy traffic and close headways, the Quick-Shunt Module reduces the shunt detection time of the E-Code system. Refer to ***RSE-1D5*** for additional information.
- Isolation Module – If required by the E-Code application, the MicroLok II Isolation Module can be included to provide the equivalent of double-break circuit protection on vital I/O channels, or convert single-polarity vital outputs to bi-polar outputs. Refer to ***RSE-1D6*** for additional information.

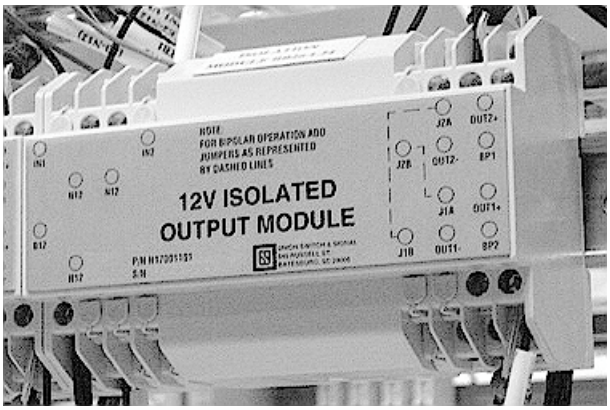

- Electronic Switch Locks – Where E-Code systems are controlling switch machines, US&S provides a complete line of solid-state switch locks and related module to drive switch machines, without the need traditional switch control relays. Refer to ***RSE-1D9, 3A1, 3A2, 3A3, 3A4 and 4C1*** for additional information.

UNION SWITCH & SIGNAL

E-Code™ Track Circuit System

RSE-1B1
Rev. 7-03

Software Characteristics

As a part of the MicroLok II product family, the E-Code system programming is performed using the US&S MicroLok II Development System. This Windows®-based consists of a Maintenance Tool, an Application-Logic Compiler, a Reverse Compiler and an Application Logic Comparison Tool. These tools enable the user to retrieve system event and error logs and to compile, debug and upload an application-logic program from a PC into the i-Lok card file. For more information on the MicroLok II Development System, refer to ***RSE-1E1***.

Typical E-Code Track Circuit Status Screen

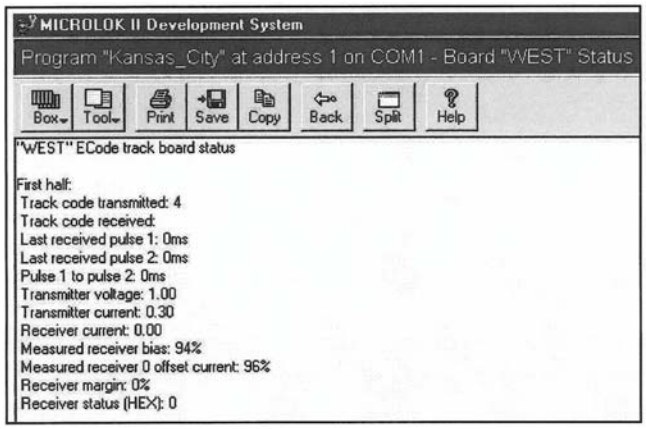

Specifications

Track Circuit Communications

Transmitter:	Output Voltage into 1.25 ohms: 1.0 to 2.5 volts DC.
	Output Impedance: 0.15 Ohms.
	Current Measurement Range: 0 to 6.0 Amps.
Receiver:	Input Impedance: 0.15 Ohms.
	Current Measurement Range: 0 to 3.6 Amps.

Power and Environmental:

Supply Volt.:	Battery: 9.8 to 16.2 Vdc
Temp Range:	-40°C to +70°C.
Humidity:	0% to 95% non-condensing.

Other Equipment

Cardfile:	Refer to ***RSE-1D1***
Plug-In PCBs:	Refer to ***RSE-1D2***
Track Interface Panels:	Refer to ***RSE-1D3***
Quick-Shunt Module:	Refer to ***RSE-1D5***
VCOR Relay:	Refer to ***RSE-4E1***

Additional Information: Specifications, Ordering, Service Manuals

- Refer to these RSE catalog sections for additional specification data on the MicroLok II system:
  - System Cardfile: ***RSE-1D1***
  - Plug-in PCBs and panels: ***RSE-1D2***
  - Track Interface Panels: ***RSE-1D3***
  - AC Lamp Driver Module: ***RSE-1D4***
  - Quick Shunt Module: ***RSE-1D5***
  - Isolation Modules: ***RSE-1D6***
  - Serial Interface Units: ***RSE-1D7***
  - VCOR and Power-Off Relays: ***RSE-1D8*** and ***4E1***.
  - SML-Series Switch Locks: ***RSE 1D9, 3A1, 3A2, 3A3*** and ***4C1***
- For additional detailed data, spare parts ordering information and service manuals on the E-Code system, contact your US&S Account Executive or go to www.switch.com
- Request US&S Service Manual SM-7101 for additional E-Code system information.

MicroLok® and MicroTrax® are registered trademarks of Union Switch & Signal Inc.
E-Code™ is a trademark of Union Switch & Signal Inc.
Windows® is a registered trademark of Microsoft Inc.

UNION SWITCH & SIGNAL

RSE-1C1
Rev. 7-03

i-Lok™ Track Circuit System

Introduced in 1999, the Union Switch & Signal MicroLok® II Wayside Control System combines vital logic, data transmission, non-vital logic and electronic coded track circuits into a single package capable of controlling applications as complex as a double cross-over.

As advantageous as such a control package has proven to be, the MicroLok II system has too much I/O capacity to be economically implemented at intermediate signal locations.

To be able to apply a MicroLok II-based package at simple signaling locations, US&S has developed the i-Lok™ Coded Track Circuit System.

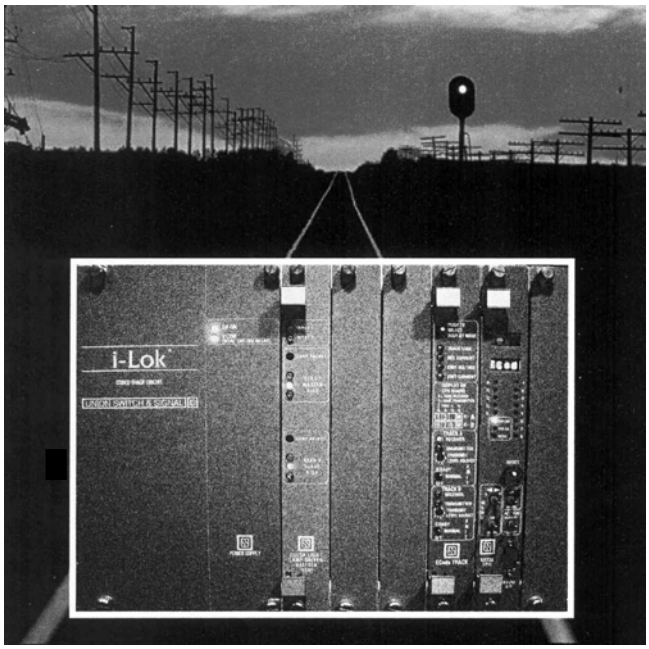

General Description

Based on the MicroLok II Wayside Control System, the i-Lok track circuit is designed to include the vital control logic, electronic coded track circuits and the I/O capacity required at intermediate signal and other small-scale wayside control locations such as repeater or intermediate locations. i-Lok is used to manage track circuits providing end-to-end rail integrity, including detection of train shunt, faulty insulated joints or broken rail. In addition to managing track circuits, this system allows the user to control signals, drive relay outputs and receive inputs from external sources.

Vital Control Logic

The i-Lok Coded Track Circuit System features the MicroLok II CPU printed circuit board (PCB) and software, including the executive program and the MicroLok II Development System. The Development System package consists of an application-logic compiler, a reverse compiler, an application-logic comparison tool and a maintenance tool. Refer to ***RSE-1E1*** for additional information.

Coded Track Circuits

Coded track circuit capability is provided by the US&S Coded Track Circuit PCB or the E-Code Coded Track Circuit System PCB, which allows the i-Lok Controller to be applied in territory where Electrocode track circuits are installed.

Advantages

- Direct drive of color light, position light, and searchlight signals.
- Direct drive of searchlight signal mechanisms.
- Hot filament checking of signal lamps.
- Boolean Logic or Ladder Logic programming.
- Windows®-based development system.
  - Maintenance tool.
  - Application-logic compiler.
  - Reverse application-logic compiler.
  - Application-logic comparison tool.
  - Enables user to write, compile and check application-logic source files.
- Diagnostics via alphanumeric displays and PC serial link.
  - Serial link downloading of application program.
- Flash Memory.
  - No EPROM burner or eraser necessary.
- Internal track circuit code generators.

UNION SWITCH & SIGNAL

i-Lok™ Track Circuit System

RSE-1C1
Rev. 7-03

Hardware Characteristics

An i-Lok installation consists of a cardfile assembly with plug-in modules and track interface panel(s) for the operating tracks. Within the cardfile assembly are the plug-in modules specific to the requirements of the location being designed. For example, certain locations may only require track circuit operation, others may require signal lighting and others may require driving relays and/or receiving inputs. Each individual location may combine portions or all of the options noted.

- Cardfiles (see also ***RSE-1D1***):
  - Available with or without built-in VCOR relay
  - I/O connectors options: Buchanan screw lock or Wago cage clamp connectors.
  - Serial ports for Master-Slave communications.
- CPU PCB (see also ***RSE-1D2***):
  - Used in all applications.
  - Contains vital Executive and Application software stored in flash EPROMs.
  - Monitors external indications from vital input, coded track circuit, non-vital input and code system interface cards.
  - Drives vital output cards (relay, lamp, track).
  - Monitors and controls serial comms. ports.
  - Monitors system internal operation for faults and responds to detected faults.
- Color light PCB (see also ***RSE-1D2***):
  - Drives two color light signal heads and includes two isolated inputs.
- Searchlight PCB (see also ***RSE-1D2***):
  - Drives two searchlight mechanisms (with mechanism checking) and includes two isolated inputs.
- Isolated I/O PCB (see also ***RSE-1D2***):
  - Includes two isolated outputs and four isolated inputs.
- Coded Track circuit PCBs (see also ***RSE-1D2***):
  - PCBs to accommodate US&S "MicroTrax/MicroLok II" or Electrocode track code communications.
- Cab signal coding and amplifier PCBs for sending out cab signals to the rails (see also ***RSE-1D2***)
- Power Supply PCB (see also ***RSE-1D2***):
  - Provides +12 Vdc and +5 Vdc regulated output needed for card file operation.
- Vital Cut-Off Relay (VCOR; see also ***RSE-1D8*** and ***4E1***)
  - Disconnects power from the outputs in the event of a fault. US&S PN-150B relay or GRS B1 Relay available for VCOR function.

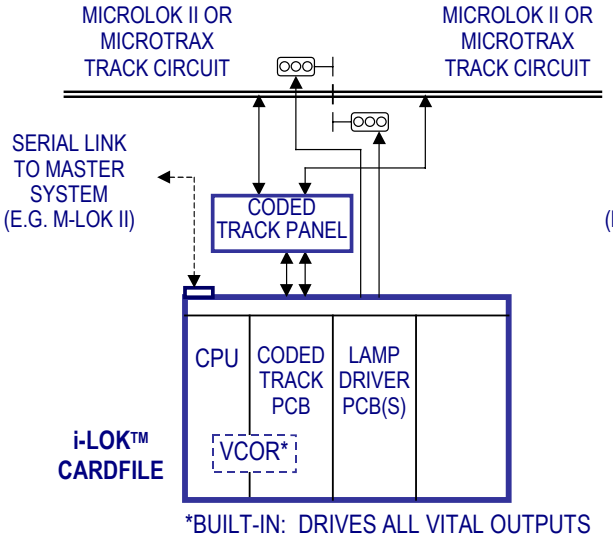

i-LOK CONTROLLING MICROLOK II (MICROTRAX) INTERMEDIATE TRACK CIRCUITS

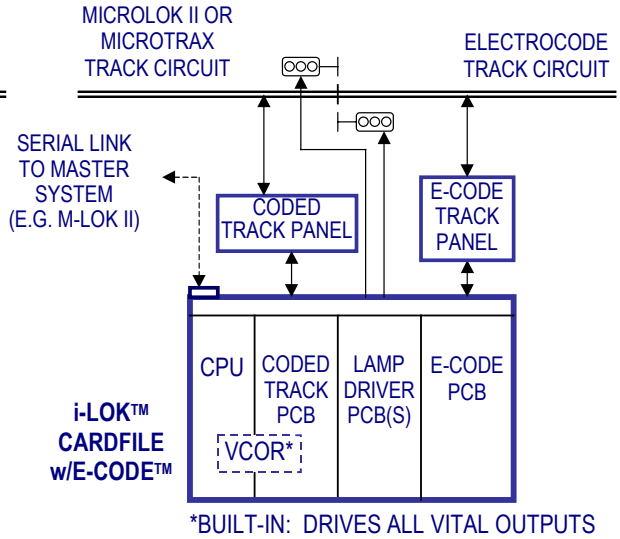

i-LOK CONTROLLING MICROLOK II (MICROTRAX) AND ELECTROCODE INTERMEDIATE TRACK CIRCUITS

i-Lok™ Track Circuit System

UNION SWITCH & SIGNAL

RSE-1C1
Rev. 7-03

Hardware Characteristics (cont'd)

- Other Peripheral Units
  - Track Interface Panels - Links the i-Lok electronics to US&S or Electrocode-based coded track circuits at the rails (refer to ***RSE-1D3*** for additional information).
  - Quick-Shunt Module – Reduces track occupancy detection times in heavy traffic areas (refer to ***RSE-1D5*** for additional information).
  - Isolation Module – Provides double-break circuit protection for vital I./O channels, and can convert single-polarity vital outputs to bi-polar (refer to ***RSE-1D6*** for additional information).

Serial Communications Adapter Panel – Used when i-Lok is communicating over a serial link to another control system in a separate house or case, to protect the serial link signals from unwanted voltage transients (refer to ***RSE-1D7*** for additional information).

Software Characteristics

Like all of the US&S microprocessor-based products before it, the US&S i-Lok track circuit is designed to be programmed by the end-user. Programming is performed using the US&S MicroLok II Development System. This Windows®-based consists of a Maintenance Tool, an Application-Logic Compiler, a Reverse Compiler and an Application Logic Comparison Tool. These tools enable the user to retrieve system event and error logs and to compile, debug and upload an application-logic program from a PC into the i-Lok card file. For more information on the MicroLok II Development System, see ***RSE-1E1***.

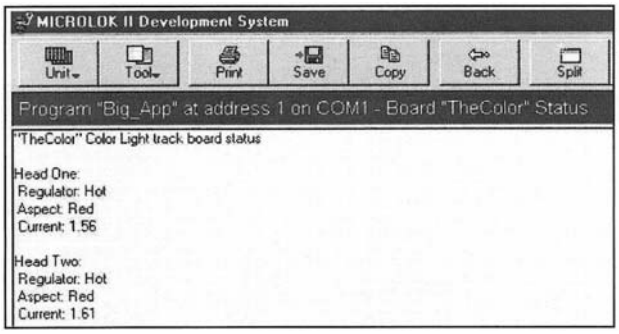

Typical i-Lok Color Light Lamp Driver Status Screen

Specifications

Power and Environmental:

Supply Voltage:	Battery: 9.8 to 16.2 Vdc
Operating Temp.:	-40°C to +70°C.
Humidity:	0% to 95% non-condensing.

Other Parameters:

Cardfile:	Refer to ***RSE-1D1***
Plug-In PCBs:	Refer to ***RSE-1D2***
Track Interface Panels:	Refer to ***RSE-1D3***
Quick-Shunt Module:	Refer to ***RSE-1D5***
VCOR Relay:	Refer to ***RSE-4E1***

Additional Information: Specifications, Ordering, Service Manuals

- Refer to these RSE catalog sections for additional specification data on the i-Lok system:
  - System Cardfile: ***RSE-1D1***
  - Plug-in PCBs and Panels: ***RSE-1D2***
  - Track Interface Panels: ***RSE-1D3***
  - AC Lamp Driver Module: ***RSE-1D4***
  - Quick Shunt Module: ***RSE-1D5***
  - Isolation Modules: ***RSE-1D6***
  - Serial Interface Units: ***RSE-1D7***
  - VCOR and Power-Off Relays: ***RSE-1D8*** and ***4E1***.
- For additional detailed data, spare parts ordering information and service manuals on the i-Lok system, contact your US&S Account Executive or go to www.switch.com
- Request US&S Service Manual SM-7101 for additional i-Lok system information.

MicroLok® is a registered trademarks of Union Switch & Signal Inc. E-Code™ is a trademark of Union Switch & Signal Inc. Windows® is a registered trademark of Microsoft Inc.

UNION SWITCH & SIGNAL

UNION SWITCH & SIGNAL

RSE-1D10
Rev. 7-03

MicroLok® II, E-Code™ and i-Lok™ Executive and Application Software

MicroLok II, E-Code and i-Lok are supported with the full spectrum of software resources to load, calibrate, upgrade and exercise all vital and non-vital software elements. A key feature of the US&S' software family is the "MicroLok II Development System", which provides a diverse range of user-friendly programming services. The E-Code and i-Lok systems utilize the identical software modules and tools under the MicroLok II name.

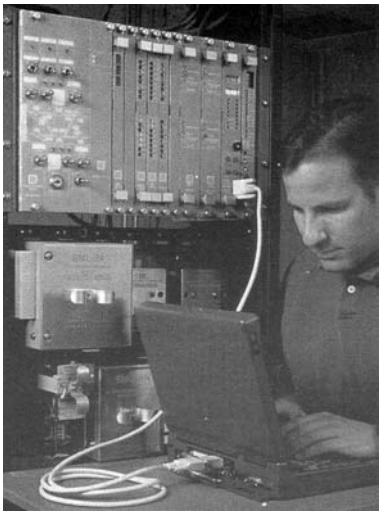

Executive Software

The MicroLok II Executive software is standard for all MicroLok II, E-Code and i-Lok systems and performs internal operations common to all system applications:

- Vital and non-vital input processing, decision-making and resulting commands;
- Vital applications: Monitoring input and output channels for intended on/off states;
- Processing of user inputs from Laptop PC or CPU board front panel controls/displays;
- Continuous internal and external diagnostics;
- Recording and playback of routine event/error codes and user-specified events;
- Manage serial data link communications;
- Executive of application software;

All MicroLok II, E-Code and i-Lok systems are shipped with the Executive Software already loaded into memory. Version upgrades from US&S are easily downloaded into the unit (Flash EPROMs on the CPU PCB) using tools available with the MicroLok Development System.

Application Software

The MicroLok-II Application Software customizes the MicroLok II, E-Code or i-Lok system to the user's exact, location-specific requirements. A wide range of programming tools and options are available in the MicroLok II Development System to effectively compile, debug, exercise and refine the application software prior to placing it in service, and to make easy adjustments thereafter.

MicroLok II Development System

The MicroLok II Development System contains a comprehensive set of tools to develop, compile and upload the user's Application Software program, as well as the means to perform field installation, configuration, monitoring, maintenance and troubleshooting. Its principal components include a Text Editor, Logic Compiler, Ladder Logic Tool, Reverse Compiler, Logic Comparison Tool, and the MicroLok II "Maintenance Tools Program".

Text Editor

The Text Editor is used to create the MicroLok II or E-Code application logic source file using any DOS or Windows-based text editor application. This program incorporates Boolean Logic, enabling the user to develop application control logic as a direct translation of standard relay circuits. This makes programming a simple task for anyone familiar with railroad signaling relay logic.

Logic Compiler

Used in conjunction with the Text Editor, the PC-based Logic Compiler checks the application logic source file for errors and generates the final application file for transfer to the MicroLok II, E-Code or i-Lok Flash EPROMs (on CPU board). This compiler also generates error and program listings, symbol table information and installation information.

UNION SWITCH & SIGNAL

RSE-1D10
Rev. 7-03

MicroLok® II, E-Code™ and i-Lok™ Executive and Application Software

MicroLok II Development System (cont'd)

Ladder logic Graphic User Interlace (GUI) Tool

This programming tool enables MicroLok II, E-Code or i-Lok application logic to be developed using the Ladder Logic approach. It gives the user the ability to select a preferred programming format for MicroLok II, E-Code or i-Lok application logic.

Reverse Compiler

The Reverse Compiler is used to assure the application source file was translated correctly for the flash EPROM by the application-logic compiler. It enables the user to upload the EPROM image file from the CPU card and regenerate the source application. The Reverse Compiler is used in conjunction with the Comparison Tool.

Comparison Tool

Along with the reverse compiler, the Application Logic Comparison tool enables the user to compare a running MicroLok II, E-Code or i-Lok system program with the original program to verify the intended application is being used. With this tool, any differences between the two versions can be reviewed to determine the amount of re-testing that may be necessary.

Maintenance Tools Program

The MicroLok II Maintenance Tools Program is a PC-based application that provides maintenance personnel and application engineers a broad range of software-related services for MicroLok-II, E-Code and i-Lok systems:

- Upload application software to system;
- Configure system during commissioning;
- View system status and historical information from system, user and error logs;
- Debug the application logic by displaying logic states as the program executes.

The Maintenance Tools program is typically loaded on a laptop PC which, in turn, is connected by serial link to the MicroLok II, E-Code or i-Lok CPU board front panel port (RS-232, null-modem cable to 9-pin "D" connector). The program is Windows 95 or Windows NT compatible.

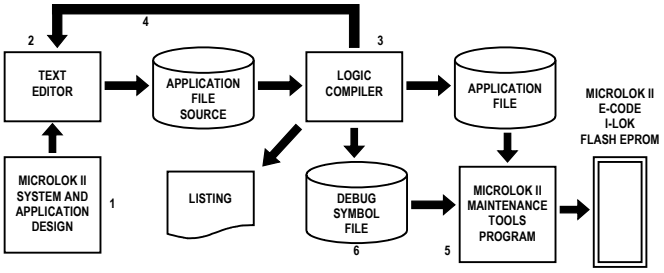

Basic Application Logic Development Process

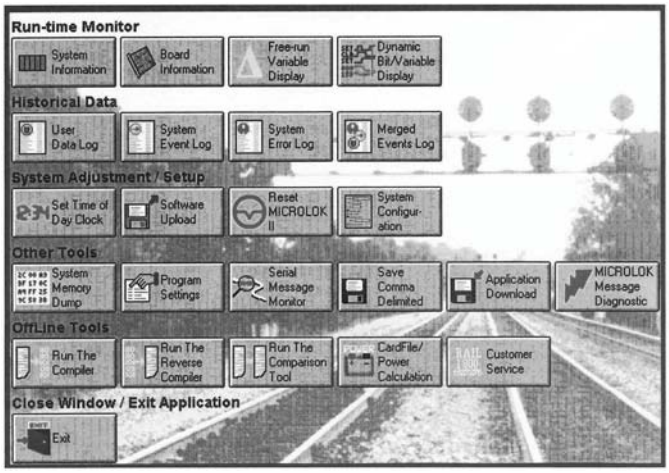

Tools Program - Initial User Interface Screen

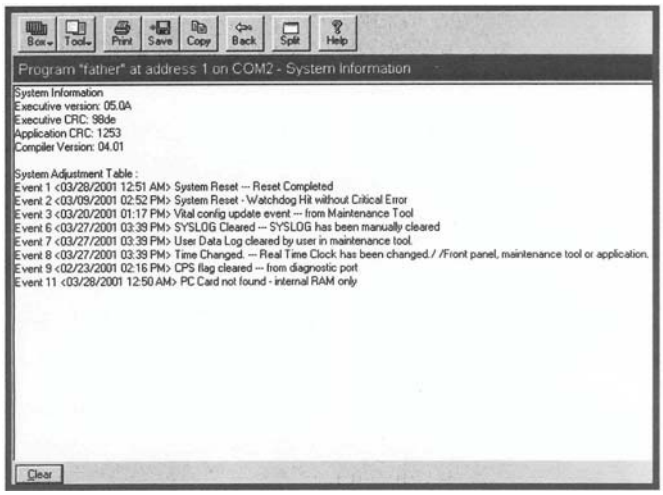

Tools Program - Typical Configuration Data Display

MicroLok® II, E-Code™ and i-Lok™ Executive and Application Software

UNION SWITCH & SIGNAL

RSE-1D10
Rev. 7-03

Code System Interface PCB Software (MicroLok II)

The MicroLok II system can be programmed to manage communications with a non-vital code system linked to a central control office. Where a US&S Genisys or Genisys-2000 code line protocol is used, the MicroLok-II CPU PCB handles the code system communications. Where a non-Genisys or Genisys-2000 protocol is used, a separate Code System Interface (CIS) PCB is installed in the MicroLok-II cardfile and programmed with the appropriate code system communications protocol.

When the CPU PCB is used to manage the code line interface, the CPU's Application logic software is programmed to support the required Genisys or Genisys -2000 protocol. When the CIS PCB is used to communicate with a non-Genisys code system, the applicable interface software is programmed into that PCB's application EEPROM. Specific executive EEPROMs are provided for the PCB to accommodate each code system application.

Code system interfaces supported by the MicroLok II system include:

- Allen Bradley PF1
- ARES
- ATS/PTS
- GRS Datatrain II
- GRS Datatrain VIII
- Harmon MCS-1
- US&S Genisys
- US&S Genisys Dual Slave
- US&S Genisys Dual Ind. Slave
- WB&S S2

Ordering and Additional Information

- Refer to tabulations below for ordering information on MicroLok II, E-Code and i-Lok vital and code system interface software.
- For additional information on this software, request US&S Service Manual SM-6800D.

MicroLok II Vital Software	
US&S Order No.	
N4512321781	MicroLok II Development System Software (CD)
N4512321782	MicroLok II Ladder Logic Software (CD)

Code System Interface PCB Application EPROMs	
US&S Order No.	
N4518000201	ATC/PTS
N4518000202	US&S GENISYS
N4518000204	Harmon MCS-1
N4518000206	WB&S S2
N4518000207	Allen Bradley DF1
N4518000208	ARES
N4518000210	GRS Datatrain II
N4518000211	GRS Datatrain VIII
N4518000212	US&S GENISYS Dual Slave
N4518000213	US&S GENISYS Dual Ind. Slave

MicroLok® is a registered trademark of Union Switch & Signal Inc. E-Code™ and i-Lok™ are trademarks of Union Switch & Signal Inc.

UNION SWITCH & SIGNAL

UNION SWITCH & SIGNAL

MicroLok® II, E-Code™ and i-Lok™ Cardfiles

MicroLok II/E-Code Cardfile

The standard cardfile used in MicroLok II and E-Code systems accommodates the full range of user system applications and PCB configurations in a single rack-mount unit. Unlike earlier systems, separate logic/serial link cardfiles, parallel I/O cardfiles and power converter panels are not required. In addition to equipment rack installations, MicroLok II/E-Code cardfiles can also be shelf or wall-mounted as needed. Also, the cardfile is designed to be CE-compliant for grounding.

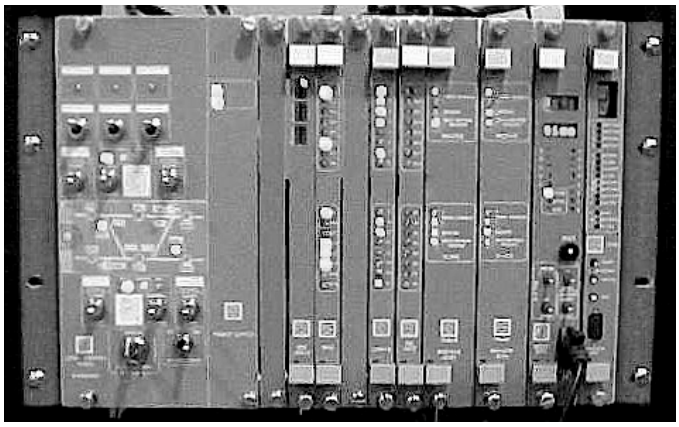

General Description

The standard MicroLok II/E-Code System Cardfile contains the system's central controlling logic and circuits that interface this logic to external circuits. Logic and interface circuits are contained on the familiar Eurocard format plug-in printed circuit boards (PCBs). The cardfile contains 20 card slots. All external wiring is connected to the MicroLok-II/E-Code cardfile via 48-pin or 96-pin connector/cable assemblies attached to connectors along the rear of the cardfile. In the typical equipment rack installation, this wiring is routed to separate adjacent terminal strips.

To prevent accidental insertion of a PCB in the wrong cardfile slot, each PCB is equipped with male keying pins. Dual in-line package (DIP) switches within the connector housings are used to set the cardfile bus address for communications between the CPU and other PCBs.

The MicroLok II/E-Code cardfile can be mounted in a standard 19-inch equipment rack, or on a wall or shelf using the fiberglass mounting brackets supplied with the unit.

Specifications

PCB Design/Mounting:	Standard Eurocard
Total PCB slots:	19
Slot bus addressing:	Via 8-rocker DIP switches in connector housings
Upper PCB conn.:	48 and 96 pin male
Mounting:	Standard 19" rack, wall or shelf
Cardfile mech. loads:	1.0g RMS, 0.2" displacement, 5-1000 Hz
Operating temp:	-40°C to +70°C
Humidity limit:	95%, non-condensing

Ordering Information

- Refer to tabulation below for ordering information on MicroLok II/E-Code cardfile and associated equipment.
- Refer to ***RSE-1D2*** for ordering information on MicroLok II/E-Code cardfile plug-in components.

MicroLok II/E-Code Cardfile and Mounting Hardware	
US&S Order No.	
N16902101	MicroLok II/ECode Standard Cardfile: 20-slot
M4518114501	Fiberglas Mounting Bracket: Right-Hand
M4518114502	Fiberglas Mounting Bracket: Left-Hand
X16903906	Shelf Mounting Kit

UNION SWITCH & SIGNAL

MicroLok® II, E-Code™ and i-Lok™ Cardfiles

RSE-1D1
Rev. 7-03

i-Lok Cardfile

US&S provides several versions of the i-Lok cardfile to suit different installation requirements. Units are available with screw lock (Buchanan) or cage clamp (Wago) wiring terminals and built-in US&S or GRS (Alstom) vital cut-off relay. Serial communications ports are also directly accessible on the cardfile housing.

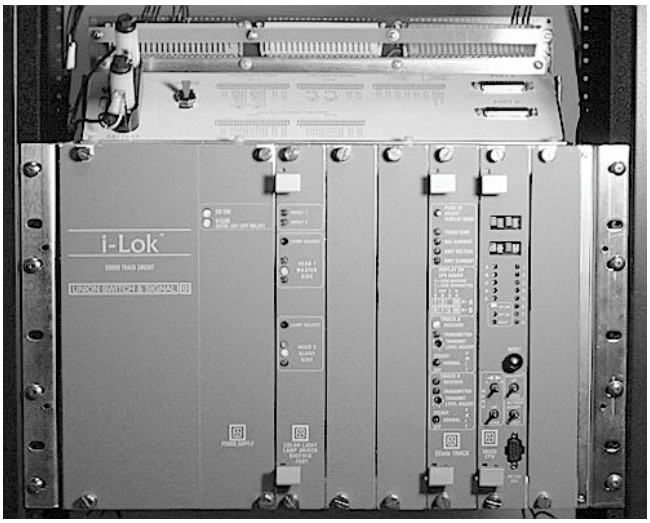

General Description

The i-Lok cardfile utilizes the familiar Eurocard design common to other US&S systems such as MicroLok II, but also incorporates parallel and serial I/O data connectors on its top sloping panel. This cardfile is designed for standard 19" rack, shelf or wall mounting and contains slots for up to 20 plug-in PCBs, four of which are typically used for various I/O boards. Three wiring terminal blocks are mounted at the top of the unit for all parallel I/O wiring. Depending on the model, these can consist of three 22-way screw lock connectors, or two 22-way plus one 20-way cage clamp connectors. Battery power to the unit is connected to a pair of standard AREMA (AAR) terminal posts.

For installations where the i-Lok unit communicates over a serial link with another i-Lok system or controlling vital processor, two 25-pin "D" connectors are provided. In a typical application, a MicroLok II system serves as the serial link Master unit to a several i-Lok Slave units.

A bay in the i-Lok contains either a US&S PN-150B vital relay, or GRS (Alstom) B1 vital relay, which serves as the system Vital Cut-Off Relay (VCOR). This relay is controlled by the CPU board and switches power to all vital outputs.

Specifications

PCB Design/Mtg:	Standard Eurocard
Mounting:	Standard 19" rack, wall or shelf
Parallel I/O Wiring:	Three 22-way screw lock connectors (Buchanan)
	Two 22-way + 1 20-way cage clamp (Wago) connectors
Serial Data Ports:	Two 25-pin "D", RS-485
Input Power Conn.:	Two standard AREMA (AAR) terminal posts.
Operating Temp.:	-40°C to +70°C
Humidity Limit:	95%, non-condensing

Ordering Information

- Refer to tabulation below for ordering information on i-Lok cardfile.
- Refer to ***RSE-1D2*** for ordering information on the i-Lok cardfile components.

i-Lok Cardfiles		
US&S Order No.	Housed Relay	I/O Connectors
N34600401	US&S	Buchanan
N34600402	US&S	Wago
N34600403	Type B1	Buchanan
N34600404	Type B1	Wago

MicroLok® is a registered trademark of Union Switch & Signal Inc.
E-Code™ and i-Lok™ are trademarks of Union Switch & Signal Inc.

UNION SWITCH & SIGNAL

MicroLok® II, E-Code™ and i-Lok™ Cardfile Plug-In PCBs and Front Panels

MicroLok II, E-Code and i-Lok systems are supplied with numerous plug-in PCBs and special-purpose panels to meet the full range of system application I/O, power and user operating/ maintenance needs. These boards and panels are equipped with informative and easy-to-operate maintainer controls and displays.

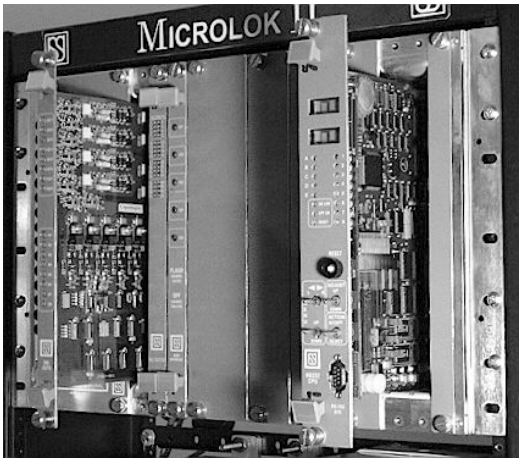

MicroLok II/E-Code PCBs

The MicroLok II/E-Code printed circuit board family provides control and interfacing functions for all manner of wayside applications such as switch machine/lock control and position indication, relay logic controls and indications, lighting and monitoring of color, search and position light signals, line wire communications, vital wayside serial communications, non-vital code line serial communications, local control panel (LCP) switch/lamp interfacing, site-specific configuration setup and programming, event and error log downloading, plus others. Refer to the ordering tabulations in this catalog section for specifications of the individual boards.

- CPU Card.
  - Used in all applications.
  - Contains vital executive and application software stored in flash EPROMs.
  - Monitors external indications from vital input, coded track circuit, non-vital input and code-system interface cards.
  - Drives vital. output cards (standard, lamp driver, coded track, cab signal).
  - Monitors and controls serial communications ports.
  - Monitors internal system operation for faults and responds to detected faults.
- Standard Vital Output PCB.
  - Directs CPU-card vital outputs to external relay coils and similar loads.
- Non-Vital Bi-Polar Output PCB.
  - Drives up to 12 searchlight-signal mechanisms.
- Vital Input Card for receipt of vital data from external circuits.
- Mixed vital Input/Output PCB.
  - For smaller applications that do not require the full 16-channel vital I/O capacity available with the Standard Vital Output and Vital Input cards.
- Vital Lamp-Driver PCB.
  - Enables the CPU to drive up to 16 color-light, searchlight or position-light signal lamps simultaneously.
- Code-System Interface PCB.
  - Non-vital serial communications link to code systems not using US&S Genisys protocol.
- Coded Track Circuit PCB.
  - Enables CPU to monitor mainline interlocking-approach track circuits (US&S MicroLok II or MicroTrax) and generates signals for these TCs.
- E-Code Track Interface PCB
  - Simultaneously supports US&S (MicroLok/MicroTrax) and Electrocode track communications.
- OS Track Circuit Card.
  - Includes a 400-Hz frequency transmitter and two receivers to provide OS track-circuit occupancy detection.

UNION SWITCH & SIGNAL

RSE-1D2
Rev. 7-03

MicroLok® II, E-Code™ and i-Lok™ Cardfile Plug-In PCBs and Front Panels

- Coder-Output and Auxiliary Coder-Output Card.
  - Generates cab-signal code.
- Cab-Amplifier Card.
  - Generates cab-signal carrier frequencies needed to transmit cab-signal codes.
- Non-Vital I/O Cards.
  - Generates and monitors status of non-vital inputs and outputs required, for example, to light remote indicator lamps and local control-panel indications.
- Power-Supply Card.
  - Provides +12 Vdc and +5 Vdc regulated output needed for cardfile operation.
- Local Control Panel.
  - Provides manual operation of interlocking switch machines, signals and selected inputs and outputs.

MicroLok II/E-Code Ordering Information

- Refer to following tabulations for ordering information on MicroLok II and E-Code cardfile components.

MicroLok II/E-Code Cardfile Plug-In PCBs and Front Panels

CPU PCB and Flash EPROM			
US&S Order No.		**US&S Order No.**	
N17061301	Central Processing Unit (CPU) PCB	J7031050107	Flash Memory Card (4 mB)

General Input/Output PCBs					
US&S Order No.	Type	Inputs (Max.)	Outputs (Max.)	Voltage	Notes
N17060501	Std. Vital Output	--	16	12 Vdc	--
N17060502	Std. Vital Output	--	16	24 Vdc	--
N17061001	Std. Vital Input	16	--	12 Vdc	--
N17061002	Std. Vital Input	16	--	24 Vdc	--
N17061003	Std. Vital Input	16	--	50 Vdc	--
N17061001	Mixed Vital I/O	8	8	12 Vdc	--
N17061002	Mixed Vital I/O	8	8	24 Vdc	--
N17061603	Mixed Vital I/O	8	8	24, 50 Vdc	(1)
N17061801	Bi-Polar Non-V	--	12	9.8-16.2 Vdc	(2)
N17000601	Non-Vital I/O	16 (3)	8 (3)	6-30 Vdc	--
N17061501	Non-Vital I/O	32	32	6-30 Vdc	--
N17002801	N-V Isolated Input	16	--	9.5-35.0 Vdc	(3), (4)
N17062701	N-V Iso. Output	--	32	9.5-35.0 Vdc	(4)
N17063701	N-V Isolated Input	32	--	9.5-35.0 Vdc	(4)
	Note (1): Outputs @24V, inputs @50V Note (2): Bi-polar outputs (e.g. for searchlight signal mechanism). Note (3): Externally available; remaining I/O interface built-in cardfile LCP. Note (4): Isolatation allows switching power from sources isolated from MicroLok II P.S. batt.				

Signal Lamp Driver PCBs					
US&S Order No.	Outputs (Max.)	Output Loads @10V	Output Loads @10V	Output Loads @12V	Total Wattage
N17060101	16	16, 18, 24, 25W	Two 18W	24W	300W (max.)

MicroLok® II, E-Code™ and i-Lok™ Cardfile Plug-In PCBs and Front Panels

MicroLok II/E-Code Cardfile Plug-In PCBs and Front Panels (cont'd)

Plug-In PCBs: Coded Track Circuit and OS Track Circuit	
US&S Order No.	
N4519100701	Coded Track Circuit PCB for general non-cab and 100 Hz cab signal-compatible applications.
N4519107601	Coded Track Circuit PCB for 40 Hz cab signal-compatible applications.
N4519107602	Coded Track Circuit PCB for 50 Hz cab signal-compatible applications.
N4519107603	Coded Track Circuit PCB for 60 Hz cab signal-compatible applications.
N17063801	E-Coded Coded Track Circuit PCB for Electrocode applications
N4518106701	OS Track Circuit PCB

Plug-In PCBs: Cab Signal Generation					
US&S Order No.	Type	Code Rates (CPM)	**US&S Order No.**	Type	Carrier Freq.
N4519105801	Coder Output	75, 120, 180	N4519106401	60/100 Hz Ampl.	60 or 100 Hz
N4519107001	Aux. Coder Out.	50	N4519106901	40/50 Hz. Ampl.	40 or 50 Hz

Code System Interface PCB and Application EPROMs			
US&S Order No.		**US&S Order No.**	
N17061401	Code System Interface PCB	N4518000208	EPROM: ARES
N4518000201	EPROM: ATC/PTS	N4518000210	EPROM: GRS Datatrain II
N4518000202	EPROM: US&S Genisys	N4518000211	EPROM: GRS Datatrain VIII
N4518000204	EPROM: Harmon MCS-1	N4518000212	EPROM: US&S Genisys Dual Slave
N4518000206	EPROM: WB&S S2	N4518000213	EPROM: US&S Genisys Dual Ind. Sl
N4518000207	EPROM: Allen Bradley DF1		

	Plug-In PCBs: Power Supply				
US&S Order No.	5V Internal	12V Internal	To VCOR Relay	Front Panel	Notes
N16600301	+5V @ 3A	±12V @1A	12V to 400 coil	--	(1), (2), (3)
N16660301	+5V @ 3A	±12V @1A	12V to 400 coil	X	(4)
	Note (1): +5V power for cardfile internal +5V circuits. Note (2): ±12V power for cardfile internal +12V and -12V circuits. Note (3): Board only w/o its own front panel. Mounted behind blank or LCP panel. Note (4): Incorporates its own front panel.				

Additional Cardfile Front Panel Attachments			
US&S Order No.		**US&S Order No.**	
N16901301	Built-In Local Control Panel	N4518502901	Double-slot shield panel
N4518502902	Single-slot shield panel	N4518501101	Blank LCP replacement panel

MicroLok® is a registered trademark of Union Switch & Signal Inc.
E-Code™ and i-Lok™ are trademarks of Union Switch & Signal Inc.

UNION SWITCH & SIGNAL

RSE-1D2
Rev. 7-03

MicroLok® II, E-Code™ and i-Lok™ Cardfile Plug-In PCBs and Front Panels

i-Lok PCBs

Plug-in printed circuit boards used in the i-Lok system accommodate all requirements of the typical intermediate signal location. In addition to the standard CPU, power supply and application-unique Track Interface boards (US&S and Electrocode-compatible), PCBs are also available for color or searchlight lamp driving and isolated or non-isolated vital I/O channels. Several additional isolated inputs are also available on the lamp driver boards. Refer to the ordering tabulations in this catalog section for specifications of the individual boards.

- CPU Card.
  - This standard MicroLok II board performs all vital monitoring and control functions (see page 1 of this catalog section).
- Track Circuit Boards
  - Options provide mainline train detection and track circuit communications for US&S MicroLok II/MicroTrax track circuits, as well as Electrocode track circuits (refer also to ***RSE-1B1***).
- Coder-Output and Auxiliary Coder-Output Card.
  - Generates cab-signal code.

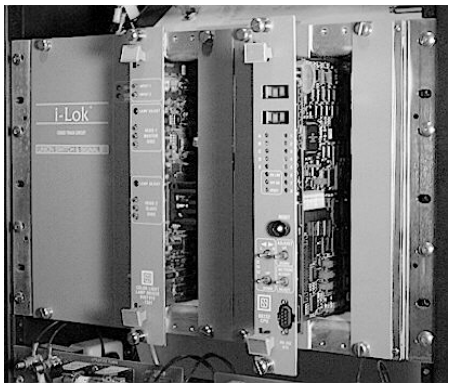

- Cab-Amplifier Card.
  - Generates cab-signal carrier frequencies needed to transmit cab-signal codes.
- Power Supply PCB adjusts wayside battery power for use by cardfile internal circuits.

i-Lok Ordering Information

Refer to following tabulations for ordering information on i-Lok cardfile components.

i-Lok Cardfile Plug-In PCBs and Front Panels

Logic and Track Circuit Interface PCBs			
US&S Order No.		**US&S Order No.**	
N17061301	CPU PCB	N17063901	"E-Code" Track Interface PCB
N4519100701	"MicroTrax" Track Interface PCB		

Plug-In PCBs: Input/Output				
US&S Order No.	Type	Inputs	Outputs	Notes
N4519102101	Isolated I/O PCB	4	2	(1)
N4519106601	Non-Iso. I/O PCB	4 (12V)	4 (12V)	(2)
N4519106602	Non-Iso. I/O PCB	4 (12V)	4 (22V)	(2)
	Note (1): Outputs capable of driving any 12V relay @150 ohms (min.). Note (2): Outputs capable of driving 12V (65 ohm) or greater relays.			

Plug-In PCBs: Signal Lamp Driver				
US&S Order No.	Type	Lamps Driven	Signal Head	Isolated Inputs
N4519101501	Color Light	18 or 25W, 10V	1 or 2	2
N4519107301	Searchlight	18 or 25W, 10V	1 or 2	2

Plug-In PCBs: Cab Signal Generation					
US&S Order No.	Type	Code Rates (CPM)	**US&S Order No.**	Type	Carrier Freq.
N4519105801	Coder Output	75, 120, 180	N4519106401	60/100 Hz Ampl.	60 or 100 Hz
N4519107001	Aux. Coder Out.	50	N4519106901	40/50 Hz. Ampl.	40 or 50 Hz

Power Supply PCB and Additional Cardfile Attachments			
US&S Order No.		**US&S Order No.**	
N16600301	Power Supply PCB	N4518502902	Single-slot shield panel
N4518502901	Double-slot shield panel	N34601301	Shield Panel (Covers Relay and P.S.)

UNION SWITCH & SIGNAL

RSE-1D3
Rev. 7-03

MicroLok® II, E-Code™ and i-Lok™ Track Interface Panels

Track Interface Panels are designed to ensure sharp and reliable injection of wayside-generated codes into the rails and equally dependable detection of received signals from the rails. These panels are designed to isolate the MicroLok II, E-Code and i-Lok systems from any unwanted stray signals or harmonics from other systems also using the rails for communications. Mounting, wiring and adjustment of these panels is easy to perform. Refer to the ordering tabulations for specifications of these panels.

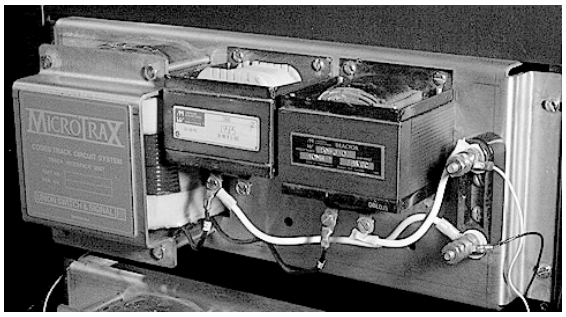

Coded Track Interface Panel



E-Code Track Interface Panel

Coded Track Interface Panel

The Coded Track Interface Panel is designed for MicroLok II/MicroTrax track signals and terminates the track at very low impedance to the frequency components of the track code. This feature enables the use of maximum length track circuits, and ensures that the coded track subsystem is compatible with wide-band terminating shunts. A high impedance is also created at 150 Hz and higher frequencies. This ensures compatibility with highway crossing motion and predictor equipment without the need for external blocking units. Four versions of the Coded Track Interface Panel are available for use with the MicroLok II system. Three of these panels are designed for operation with different cab frequencies (as required).

E-Code Track Interface Panel

The E-Code Track Interface Panel performs the same functions as the standard Coded Track Circuit Interface Panel, but is tailored to carry both the MicroLok II/MicroTrax and Electrocode track signals. This panel is also designed to protect track communications from unwanted transient electrical signals.

Cab Signal Interface Panel

Three different Cab Signal Interface panels are available to interface the system-generated cab signals with the rails for overlay on coded track circuit signals. Each configuration of the interface panel accommodates a different cab signal carrier frequency, including the typical 60 and 100 Hz carriers, and a 40 Hz carrier for special applications.

The Cab Signal Interface Panels limit harmonics that could disrupt highway motion detectors and crossing predictors. Unwanted side-band frequencies are minimized through the use of special carrier switching and carrier cycle numbering schemes.

Each panel is equipped with adjustments for rail current (both sides of insulated joint) and fine calibration of carrier frequencies. Panel protective features include current limiting when a train is directly over the track connections and built-in filtering to prevent cab transmitter interference with coded track messages.

Advantages

- Compatible with existing track circuits and other signals on the rails.
- Highly immune to potential interference.
- Isolates sensitive control system electronics from transient voltages in the rails.
- Easy installation and adjustment.

UNION SWITCH & SIGNAL

RSE-1D3
Rev. 7-03

MicroLok® II, E-Code™ and i-Lok™ Track Interface Panels

CODED TRACK INTERFACE PANELS AT INTERMEDIATE SIGNAL LOCATION

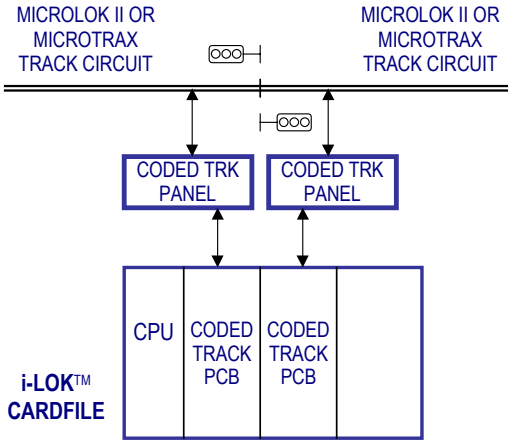

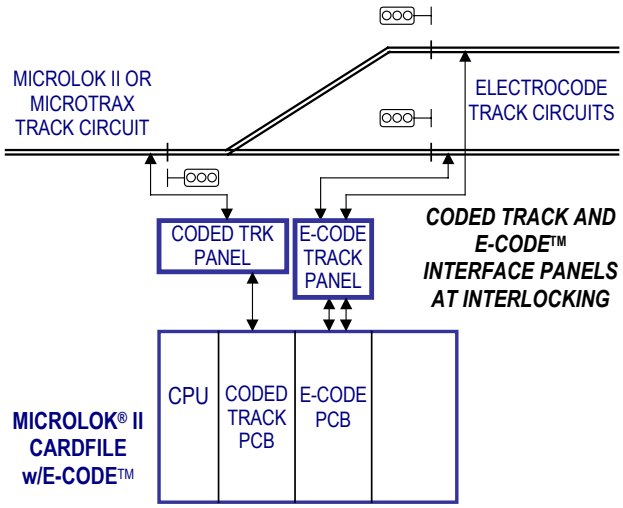

CODED TRACK AND E-CODE™ INTERFACE PANELS AT INTERLOCKING

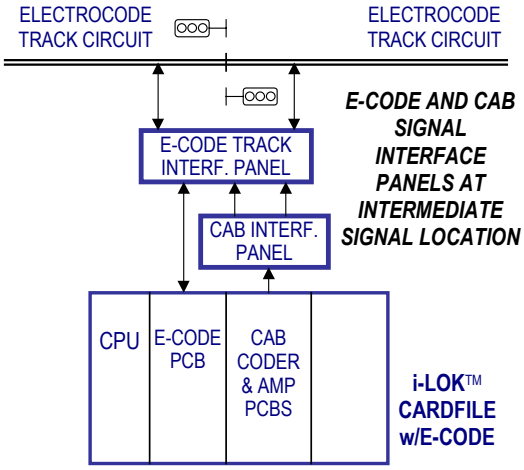

E-CODE AND CAB SIGNAL INTERFACE PANELS AT INTERMEDIATE SIGNAL LOCATION

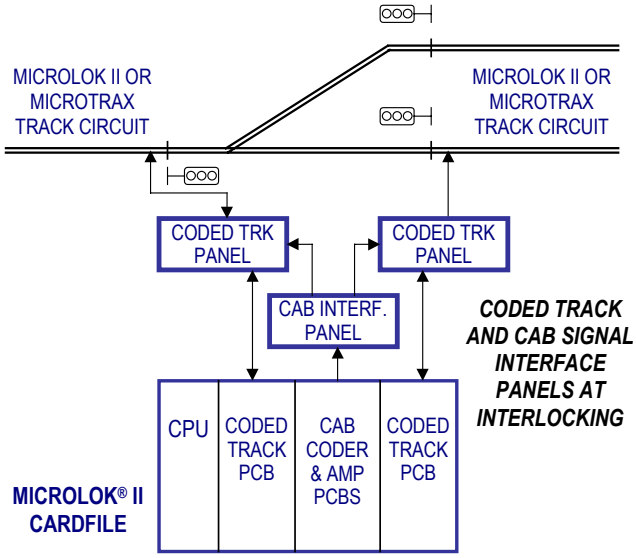

CODED TRACK AND CAB SIGNAL INTERFACE PANELS AT INTERLOCKING

Coded Track Interface Panel Design

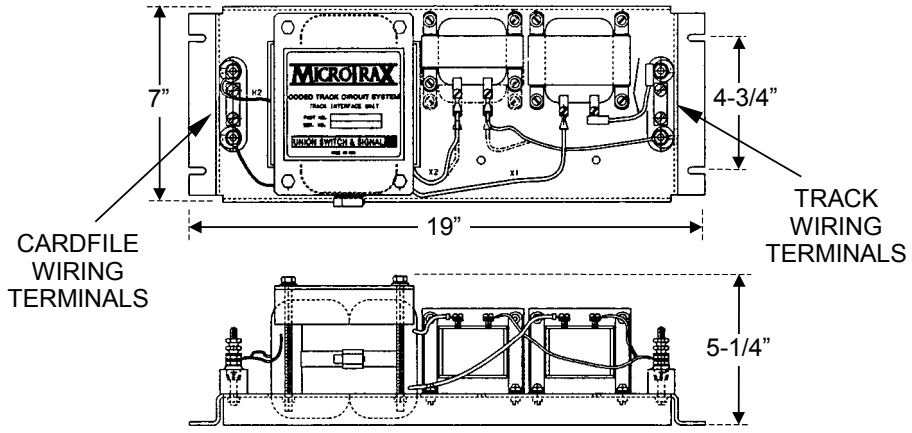

MicroLok® II, E-Code™ and i-Lok™ Track Interface Panels

UNION SWITCH & SIGNAL

RSE-1D3
Rev. 7-03

Cab Signal Interface Panel Design

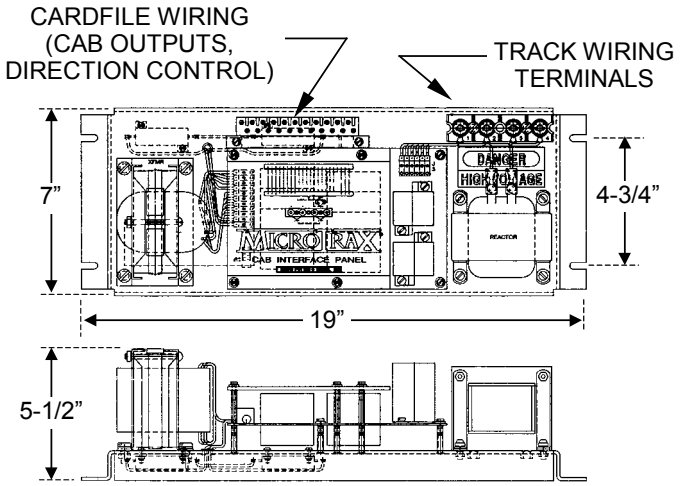

E-Code Track Interface Panel Design

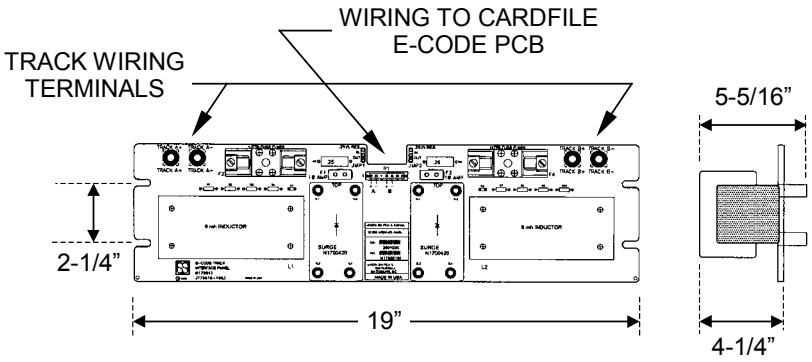

Specifications and Ordering Information

Refer to tabulations below for Track Interface Panels' specifications and ordering information.

Track Interface Panels	
US&S Order No.	
N4518350101	General applications without cab signal.
N4518350102	Non-cab territories with 86 Hz crossing predictors.
N4518350103	100 Hz cab signal territories. Use with cab Signal panel N451835-0802
N4518350104	60 Hz cab signal territories. Use with cab panels N451835-0801, -1101
N17004101	E-Code Track Interface Panel

Cab Signal Interface Panels	
US&S Order No.	
N4518350801	60 Hz cab signal territories. Use with track panel N451835-0104 (1)
N4518350802	100 Hz cab signal territories. Use with track panel N451835-0103 (1)
N4518351101	40 Hz cab signal territories. Use with track panel N451835-0104
	Note (1): Requires Term. Capacitor PCB for application (see tab below.)

Auxiliary Components	
N4519232501	Termination Capacitor PCB

MicroLok® is a registered trademark of Union Switch & Signal Inc. E-Code™ and i-Lok™ are trademarks of Union Switch & Signal Inc.

UNION SWITCH & SIGNAL

Wayside Signaling Systems

UNION SWITCH & SIGNAL

RSE-1D4
Rev. 7-03

MicroLok® II, E-Code™ and i-Lok™ Quick-Shunt Module

For heavy traffic applications where the fastest possible train shunt detection is needed or where a detection zone is required to release a switch lock, an optional Quick Shunt Module is provided. This unit reduces the normal system shunt detection time of 6 - 12 seconds to about 100 milliseconds.

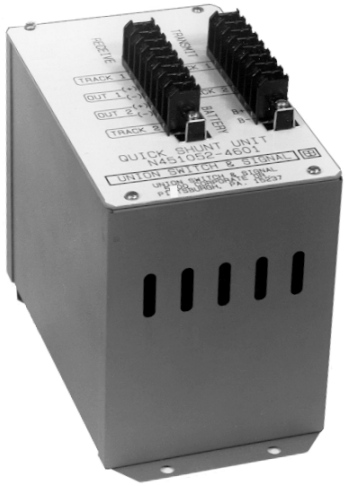

General Description

The module contains circuitry for independent train detection on both sides of an insulated joint. One unit services both adjacent track circuits at an intermediate location, with connections run to both Track Interface Panels.

The module circuitry includes an audio frequency transmitting source and an output transformer with two secondary windings, each having conditioning circuitry in series with their respective outputs. The output of the module is a DC voltage that decreases significantly when a shunt is detected. There are two independent receivers tuned to the system transmitting frequency which connect to the track interface panel(s). With this configuration, true shunt mode operation is attained without the need for separate track termination leads.

Specifications

Shunt Detection Time:	100 milliseconds (nom.)
Input Threshold:	8 Volts (approx.)
Track Detection Zone:	75 ft. (max.)
Housing Design:	“AFO” style unit with two 8-way screw-lock plug connectors.
Mounting:	Shelf or wall

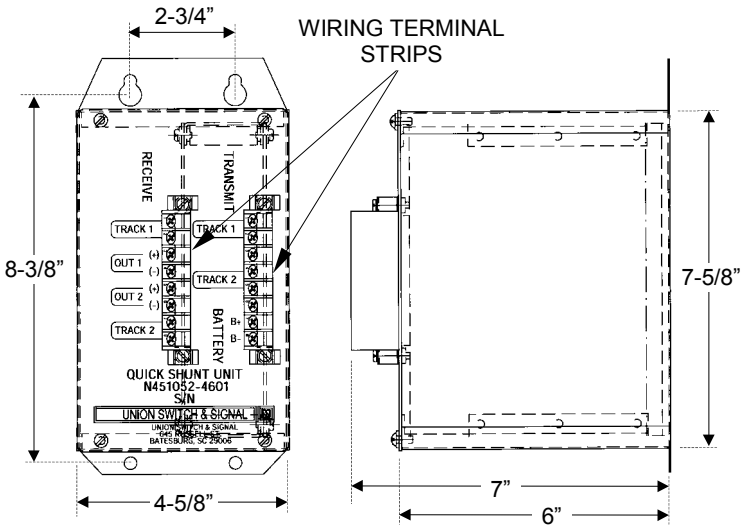

UNION SWITCH & SIGNAL

Quick Shunt Module

RSE-1D4
Rev. 7-03

Typical Quick Shunt Module Wiring

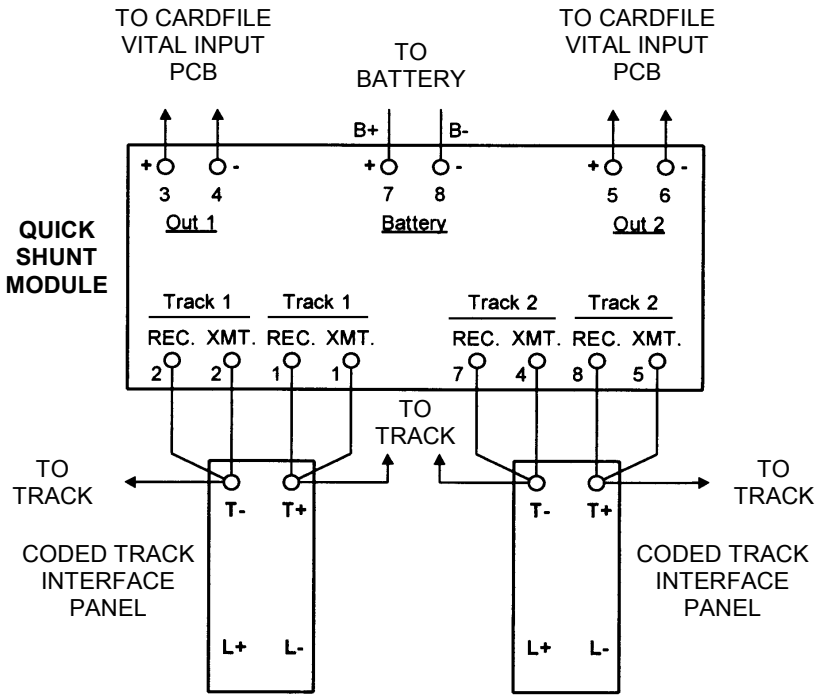

Ordering Information

- Refer to tabulation below for Quick Shunt Module ordering part number.

Quick Shunt Module	
US&S Order No.	
N4510524601	Quick-Shunt Module

MicroLok® is a registered trademark of Union Switch & Signal Inc.
E-Code™ and i-Lok™ are trademarks of Union Switch & Signal Inc.

Wayside Signaling Systems

UNION SWITCH & SIGNAL

RSE-1D5
Rev. 7-03

MicroLok® II, E-Code™ and i-Lok™

AC Lamp Driver, Hot Filament Checker and Redundancy PCB

The AC Lamp Driver provides the means to drive up to four separate ac signal lamp circuits. The unit is designed to drive lamp circuits that each consist of a W2 transformer and two 10 Vac, 25W lamps maximum. Two enable inputs (primary and secondary) provide a power output. These 12 Vdc commands are generated by the controlling system (e.g. MicroLok II). The AC Lamp Driver is specifically designed for compatibility with these systems, and conforms to US&S EMC/RFI/ESD requirements. The AC Lamp Driver Module is augmented with a Hot Filament Checker to verify lamp circuits, and a Redundancy PCB to enable control from two external systems.

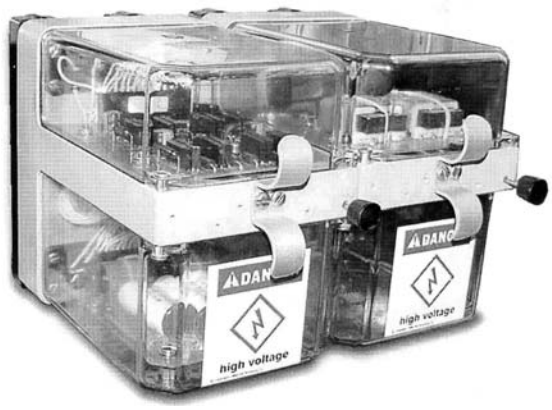

General Description

Lamp Driver Unit

The AC Lamp Driver consists of two main component: A mounting base and a plug-in module. The plug-in module is secured to the base by a latch. The unit occupies the same volume as a US&S PN-250 series relay and uses the same type of rack mounting base. A red light-emitting diode (LED) lights when primary enable voltage is applied to the AC Lamp Driver.

Optional Hot Filament Checker and Redundancy PCB

An optional component, the Hot Filament Checker, can be installed with the AC Lamp Driver to check filament integrity for up to four lamp circuits. The unit provides output signals that correspond to the presence or absence of lamp filaments. The Hot Filament Checker is designed to function with a W2 transformer and a maximum of two 10 Vac, 25 W lamps per circuit (minimum of one 25 W lamp).

When installed with the optional Redundancy Printed Circuit Board (PCB), the AC Lamp Driver can receive enable inputs from two separate control systems.

Advantages

- Enables driving of AC-powered signal lamps
- Meets US&S EMC/RFI/ESD standards
- Standard PN-250 unit design and mounting base
- Hot Filament Checker verifies four lamp circuits
- Redundancy PCB allows control from two systems

Specifications

AC Lamp Driver Unit

Input Voltage:	110 to 130 Vac RMS, 60 Hz
Output Voltage:	Directly proportional to input voltage: 110 to 130 Vac RMS. Applied to lamp transformer primary
Input Enable Voltage:	12 Vdc nominal from external power source
Input Primary Enable:	25 mA @ 12.5 Vdc
Input Secondary Enable:	12 mA @ 12.5 Vdc
Max. Lamp Load:	50 W max., each lamp circuit
Max. Total Lamp Load:	150 W max, (for 25 W lamp pairs, only three of the four outputs may be on simultaneously)
Isolation:	2000 Vac control to output
Module Dimensions:	Same as US&S PN-250 series vital plug-in relay.
Operating Temperature:	-40°F to +158°F (-40°C to +70°C)
Humidity Range:	0 to 95 % non-cond.

UNION SWITCH & SIGNAL

RSE-1D5
Rev. 7-03

AC Lamp Driver, Hot Filament Checker and Redundancy PCB

Specifications (cont'd)

Redundancy PCB:

Circuit Design:	Eight 1000 V, 1A diodes wired in four groups of two diodes in logical "OR" configuration.
Mounting Location:	Base of AC Lamp Driver Module

Hot Filament Checker

Input Current Range:	AC lamp load current reflected to primary of lamp transformer.
Input Voltage:	Per lamp transformer primary current. Note: Checker must be used with W-2 transformer.

Hot Filament Checker (cont'd)

Output Voltage Range:	1.7 to 30 Vdc dependant on input current and line volt.
Output Volt. Indications:	> 9.5 Vdc - filament intact. < 7.5 Vdc - filament failure.
Lamp Load:	Max: Two 25 W lamps. Min: One 25 W lamp.
Operating Temperature:	-40°F to +158°F (-40°C to +70°C)
Humidity Range:	0 to 95 % non-cond.

Typical Application: AC Lamp Driver

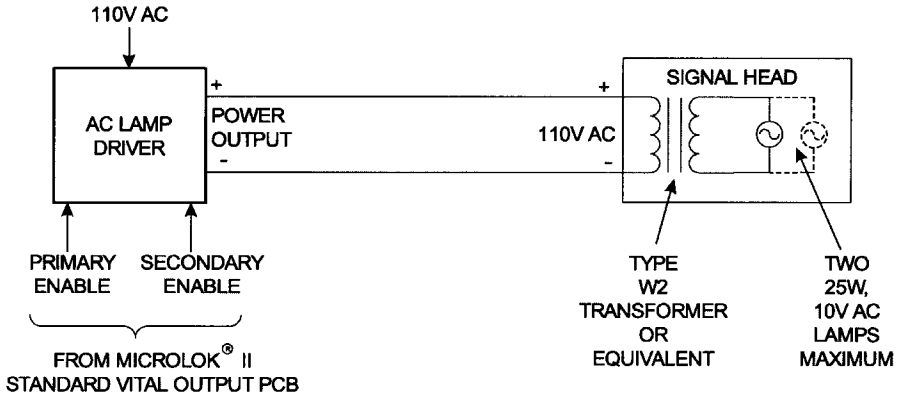

Typical Application: With Hot Filament Checker

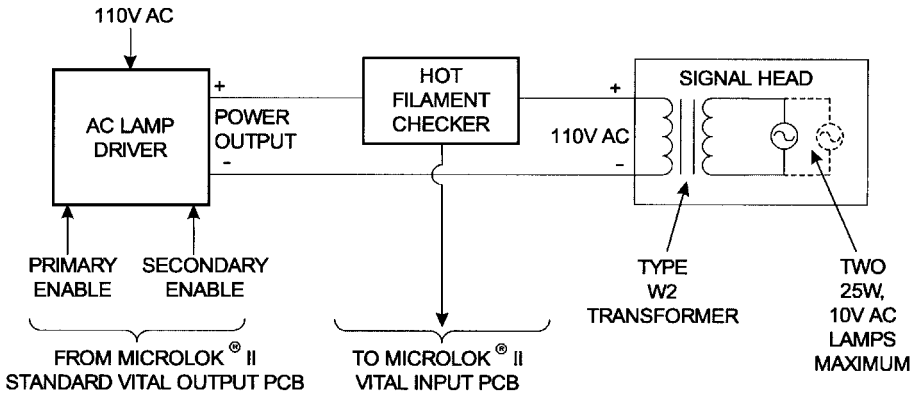

AC Lamp Driver, Hot Filament Checker and Redundancy PCB

UNION SWITCH & SIGNAL

RSE-1D5
Rev. 7-03

AC Lamp Driver Design

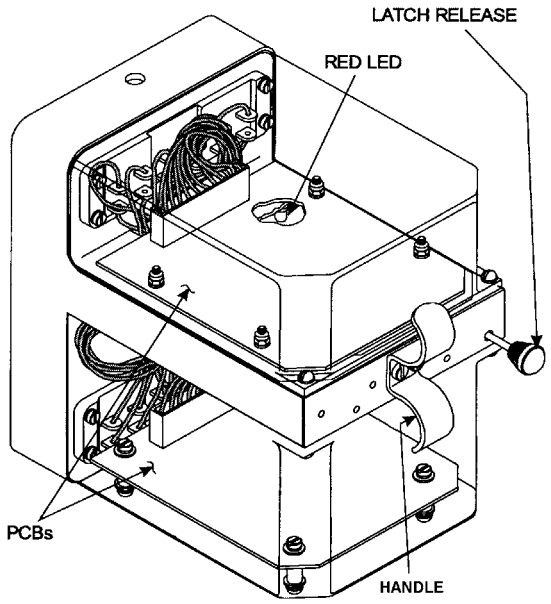

Redundancy PCB Installation (On Plug-In Base)

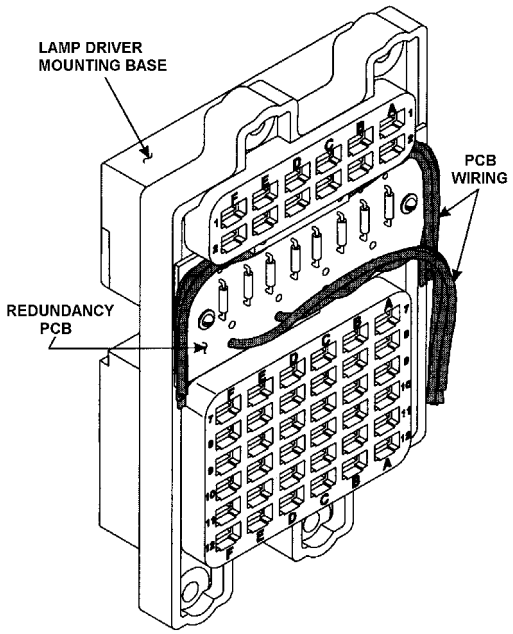

Ordering Information

- Refer to tabulation for ordering data on AC Lamp Driver and related equip.
- Request US&S Service Manual SM-8525 for AC Lamp Driver Module components.

AC Lamp Driver and Associated Equipment	
US&S Order No.	
N40104901	AC Lamp Driver Module
N438689003	PN-250 Style Relay Mounting Base
N40104902	AC Lamp Driver: Hot Filament Checker (Optional)
N17003201	AC Lamp Driver: Redundancy PCB (Optional)

MicroLok® is a registered trademark of Union Switch & Signal Inc.
E-Code™ and i-Lok™ are trademarks of Union Switch & Signal Inc.

UNION SWITCH & SIGNAL

Wayside Signaling Systems

UNION SWITCH & SIGNAL

RSE-1D6
Rev. 7-03

MicroLok® II, E-Code™ and i-Lok™ Isolation Module

US&S' vital control system Isolation Module provides the equivalent of double-break circuit protection where the system is controlling vital relays or interfacing line circuits in a separate equipment house or case. This device can also be used to create a vital bi-polar output from two single break standard outputs.

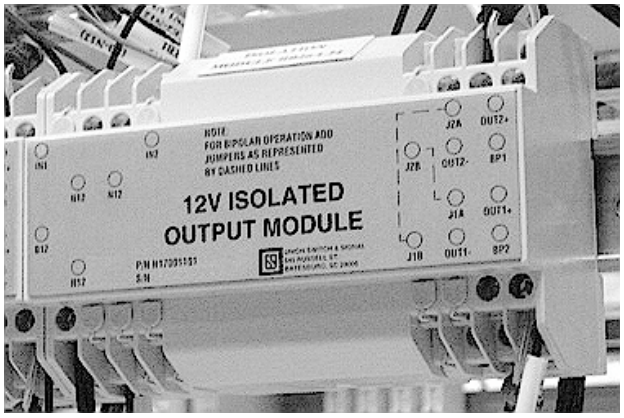

Typical Isolation Module Installation

General Description

When connected to an output of the standard vital output PCB or mixed vital I/O PCB, the Isolation Module creates an isolated output suitable for connection to line or relay circuits in a different house or case. The module contains two independent circuits that can be interconnected to create a single, isolated bi-polar output when required by the application. See page 2 for typical circuits.

Three versions of the Isolation Module are available to accommodate operation with 12V, 24V and 50V circuits. Each module type is designed to operate from a nominal 12V battery source. The 12V version provides an output slightly greater than the battery source voltage. Current is limited to 0.4A with voltage foldback generally occurring at the same point. The output of the 50V version is also proportional to the battery source voltage with foldback occurring at about 0.13A. Outputs are short-circuit protected and are designed to withstand a single short to B12 or N12 without damage. The outputs can also withstand 2000V RMS to battery and earth ground.

The Isolation module consists of a 2-piece plastic case with an internal dual-circuit printed circuit board and external screw lock wiring terminals. The case is mounted in a standard equipment rack using a DIN rail.

Advantages

- Provides both double-break circuit protection and bi-polar output
- Versions available for 12V, 24V or 50V systems
- Short circuit-protected outputs.
- Easily-mounted and wired compact unit.

Specifications

Voltage Options:	12V, 24V, 50V
Voltage Source:	12V (all versions)
Output Protection:	Short-circuit protected
Output Volt. Breakdown:	2000V RMS
Unit Dimensions:	See page 2.
Unit Mounting:	Per equipment rack DIN rail.

Ordering Information

- Refer to ordering tabulation below for Isolation Module part numbers.

Isolation Modules	
US&S Order No.	
N17001101	Isolation Module (12V output)
N17001102	Isolation Module (50V output)
N17001103	Isolation Module (24V output)

UNION SWITCH & SIGNAL

RSE-1D6
Rev. 7-03

MicroLok® II, E-Code™ and i-Lok™ Isolation Module

Typical Uni-Polar Circuit Application

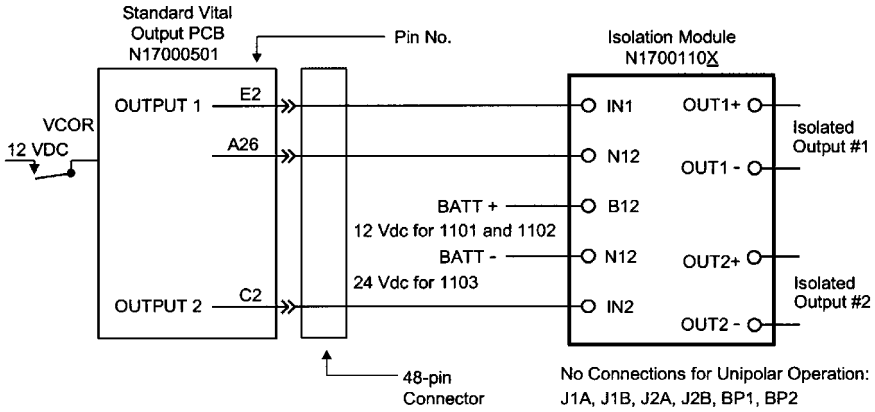

Typical Bi-Polar Circuit Application

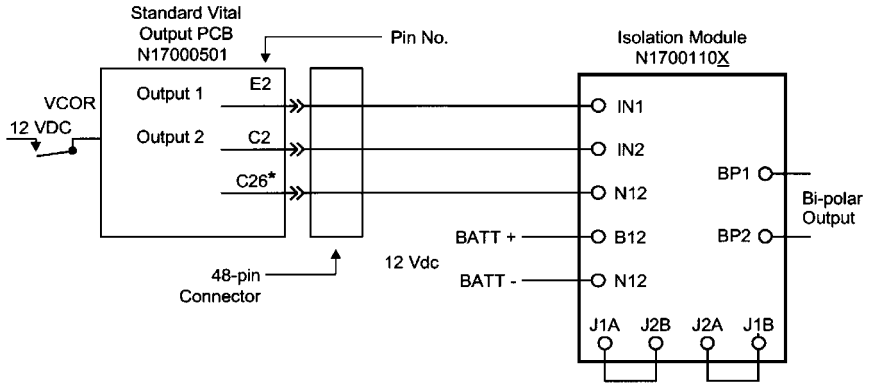

Unit Dimensions

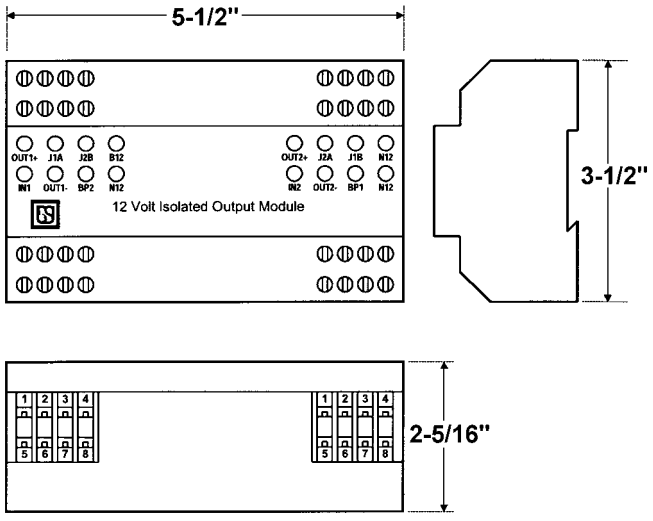

MicroLok® is a registered trademark of Union Switch & Signal Inc. E-Code™ and i-Lok™ are trademarks of Union Switch & Signal Inc.

UNION SWITCH & SIGNAL

MicroLok® II, E-Code™ and i-Lok™
Vital and Non-Vital Serial Link Interface Devices

US&S provides several different units to help insure the integrity of serial communications channels to and from MicroLok II/E-Code and i-Lok systems. The Vital Serial Communications Adapter Panel and the Non-Vital Serial Link Isolator Unit are designed to protect their respective channels from any undesirable transient voltages that might otherwise corrupt the transmitted or received data.



Current Loop Adapter

General Description

Vital Serial Communications Adapter Panel

The Vital Serial Communications Adapter Panel is used to protect vital serial communications between vital processor systems that are contained in separate wayside houses or cases. This panel converts the EIA-level signals at both ends of the link to a 20 mA current loop level. This protects the serial channels from voltage transients.

A single, standoff-mounted printed circuit board on the panel contains the EIA/current loop conversion circuitry. Two power sources (±12V and +5V) are required to operate the panel circuitry. User devices include a power on/off switch, a fuse assembly, power status lamps, and communications status lamps for the current loop half of the interface.

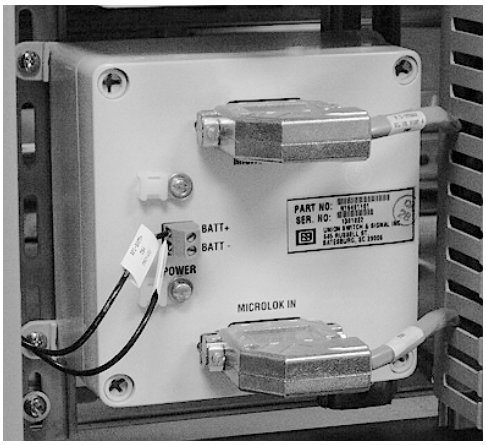

Typical Serial Link Isolator Installation

Non-Vital Serial Link Isolator Unit

The Non-Vital Serial Link Isolator Unit is designed to protect the communications lines between the CPU PCB, or the MicroLok II CIS PCB, and the external code system from voltage transients. This unit operates from signal battery and provides isolation between the host system and the serial code line or Glenaire modem. The unit also provides isolated ±12V to power the modem, if required.

Mounting of the Serial Link Isolator Unit is accomplished with stand-offs from the cardfile back cover.

Advantages

- Units help protect both vital and non-vital serial communications.
- Serial Comm. Panel ideal for house-to-house serial links.
- Isolator unit ensures reliable data TX/RX for CPU and CSIB boards.
- Both units easily mounted and connected.

UNION SWITCH & SIGNAL

RSE-1D7
Rev. 7-03

MicroLok® II, E-Code™ and i-Lok™
Vital and Non-Vital Serial Link Interface Devices

Specifications

Serial Communications Adapter Panel

Operating Power Input:	+5 Vdc, +5% @100 ma
Comm. Power Input:	9.5 to 16.5 Vdc @200 ma, +12 Vdc (nom.)
EIA Signal Level Input:	RS-232/RS-423 compatible
Converted Signal:	20 mA current loop
Current Loop Cable:	5,000 ft. (max.), 10,000 ft. total cable path, 30/Ωmile total resistance

Non-Vital Serial Link Isolator

Power Input:	9.5 to 16.5V dc (signal battery)
Modem Power Outputs:	+12V and -12V
Serial Cable Connections:	Two 25-pin “D” plugs (female)
Power Connections:	6 discrete-wire terminals

Serial Communications Adapter Panel General Application

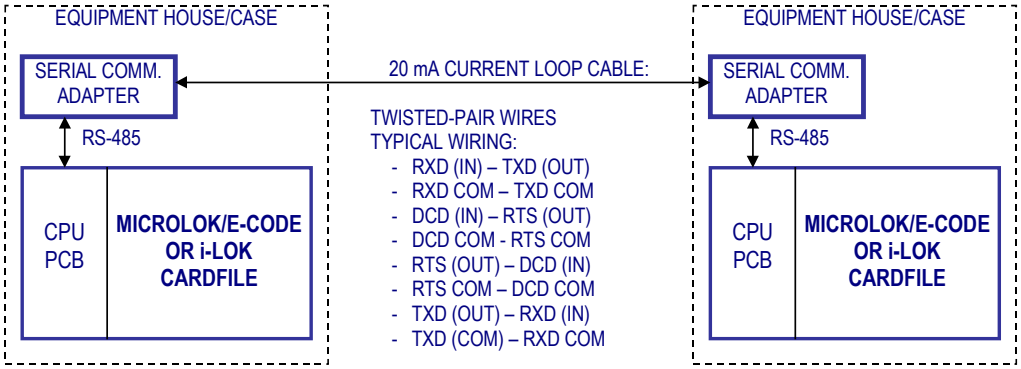

Serial Link Isolator Typical Wiring

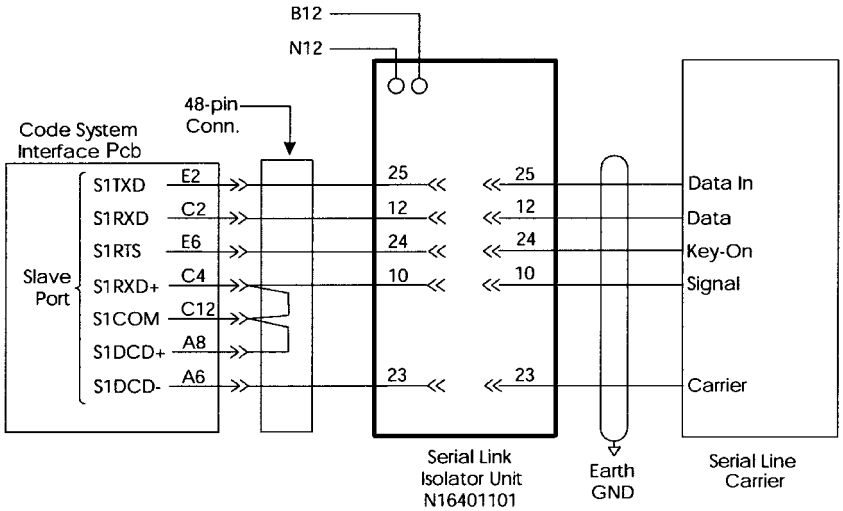

MicroLok® II, E-Code™ and i-Lok™
Vital and Non-Vital Serial Link Interface Devices

UNION SWITCH & SIGNAL

RSE-1D7
Rev. 7-03

Serial Communications Adapter Panel Design

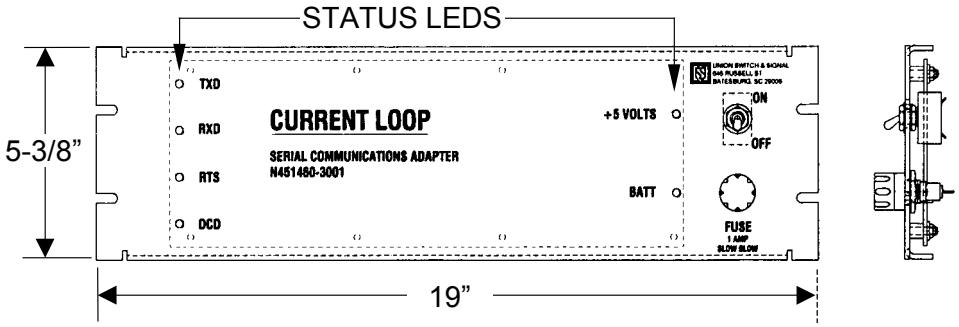

Serial Link Isolator Design

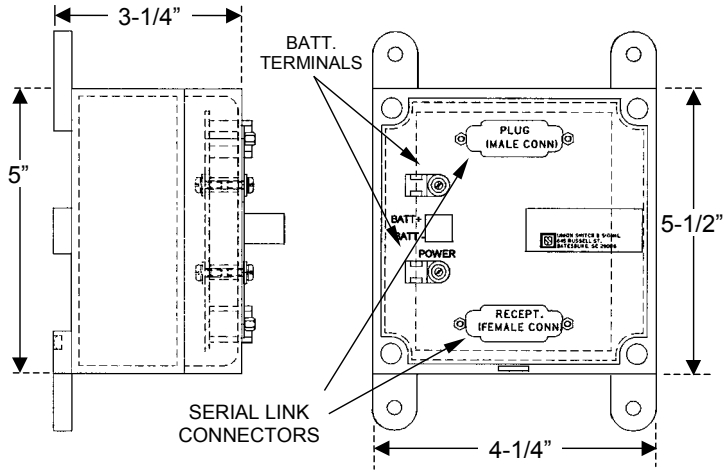

Ordering Information

- Refer to ordering tabulation for Serial Communications Adapter Panel and Non-Vital Serial Link Isolator part numbers.

Serial Interface Devices	
US&S Order No.	
N16401101 N4514603001	Type A Serial Link Isolator Unit Serial Comm. Adapter Panel

MicroLok® is a registered trademark of Union Switch & Signal Inc. E-Code™ and i-Lok™ are trademarks of Union Switch & Signal Inc.

UNION SWITCH & SIGNAL

UNION SWITCH & SIGNAL

RSE-1D8
Rev. 7-03

MicroLok® II, E-Code™ and i-Lok™ Vital Cut-Off and Power-Off Relays

To ensure system safety in systems such as MicroLok II and i-Lok, all vital outputs (e.g. to switch machines, signals) are routed through a Vital Cut-Off Relay (VCOR), which is controlled by the system vital logic. In the event the system detects a problem, it is designed to deenergize the VCOR, thus removing power to the vital outputs and placing the overall signaling system in the most restrictive state.

The Power-Off Relay is used to detect a loss of local commercial power and send this power-off indication to the system. In turn, the system can display or report the power-off condition as required.

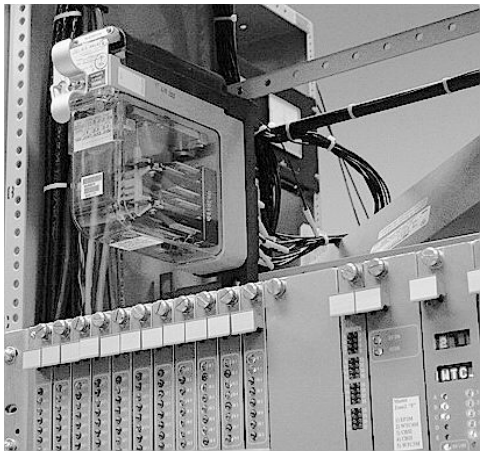

General Description

The US&S PN-150B Vital Plug-In Relay is used for the critical VCOR function. This relay incorporates a 400 ohm coil, and 6FB contacts consisting of low voltage silver-to-silver front contacts and silver-to-silver back contacts; refer to ***RSE 4E1*** for additional information. The i-Lok system can incorporate the PN-150B or the GRS B-1 relay for the vital cut-off function.

For the Power Off Relay, interruption of commercial power drops the relay and closes a normally open (N.O.) relay contact. This contact closure completes an input circuit to the Non-Vital Input PCB in the cardfile. The Power-Off Relay is mounted on a plug-in base and secured with a spring clip. This base is designed for attachment to a standard equipment rack DIN rail, or can be secured to a flat surface using a screw hole in the relay base.

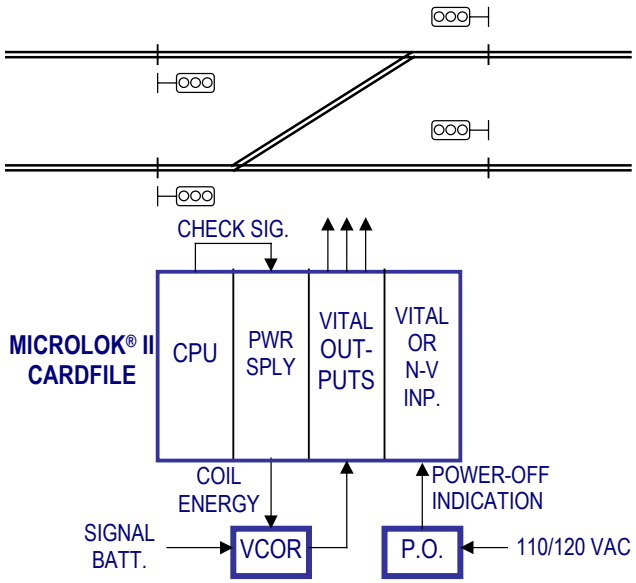

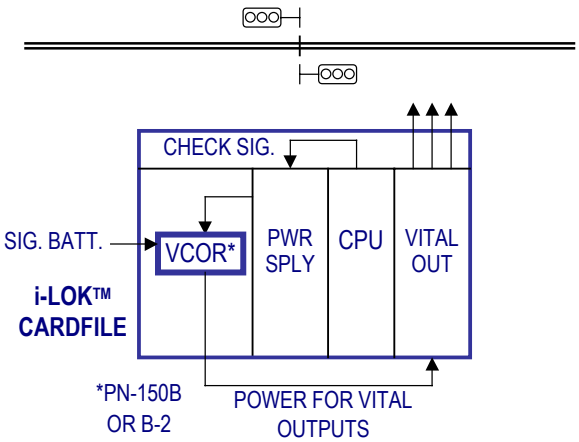

ANSALDO SIGNAL
A Finmeccanica Company

UNION SWITCH & SIGNAL

RSE-1D8
Rev. 7-03

MicroLok® II, E-Code™ and i-Lok™ Vital Cut-Off and Power-Off Relays

Specifications

VCOR (PN-150B)

Contacts:	6FB
Coil Resistance:	400 ohms
Pick-Up:	0.0132 amps, 5.3 dc volts
System Voltage:	10V

Power-Off Relay

Pick-up voltage:	110 to 120V ac
Contact Type:	SPDT (1 Form C)
Contact Rating:	10A

Power Off Relay Design

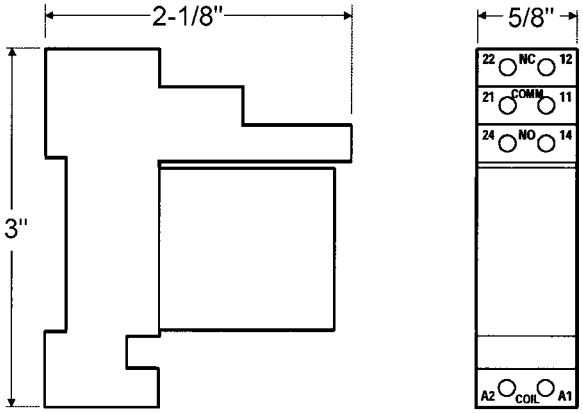

Ordering Information

- Refer to tabulations for ordering information on the VCOR and Power-Off relays.
- Request US&S Service Manual SM-4596 for VCOR relay components.

VCOR and Power-Off Relays	
US&S Order No.	
J7261530283 N322500701 J0702051463	Power-Off Relay Vital Cut-Off Relay (VCOR), PN-150B (1) GRS Type B-1 Relay (2)
	Note (1): See also RSE-4E1 Note (2): Used in i-Lok cardfile only

MicroLok® is a registered trademark of Union Switch & Signal Inc. E-Code™ and i-Lok™ are trademarks of Union Switch & Signal Inc.

UNION SWITCH & SIGNAL

MicroLok® II/E-Code™

Solid-State Switch Machine Modules and Associated Equipment

US&S provides solid-state modules that enable simple, direct driving of switch machines from the system's vital outputs, without the need of expensive and complex electro-mechanical relays such as lock and overload. The products include the SML-24 and SML-110 Switch Locks, the Low Voltage Switch Machine Controller (SMC), Biased Neutral SMC and the PN-150SSR solid-state relay.

General Description

The SML-110 Switch Lock is provided for high voltage (110V) switch machine applications and can be driven by MicroLok II, E-Code, i-Lok or earlier US&S solid-state controllers, or by conventional relay-based interlocking logic. The SML-110 unit can sustain a short circuit on its output terminals without suffering any damage. Overload protection is provided with a built-in timer. The output terminals are electrically isolated from the 120 Vac input terminals, eliminating the need for a separate 60 Hz isolation transformer. Refer to ***RSE 3A2*** for additional information on the SML-110.



The PN-150SSR is used with the SML-110 to drive high-voltage machines. This relay consists of two dual solid state relays that are housed inside a US&S PN-150 Relay Case. These relays route the correct polarity voltage that is required to move the switch machine to either the normal or reverse position.

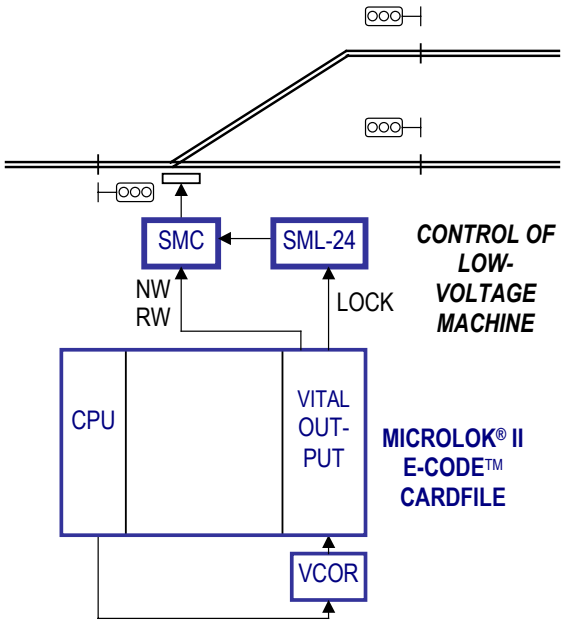

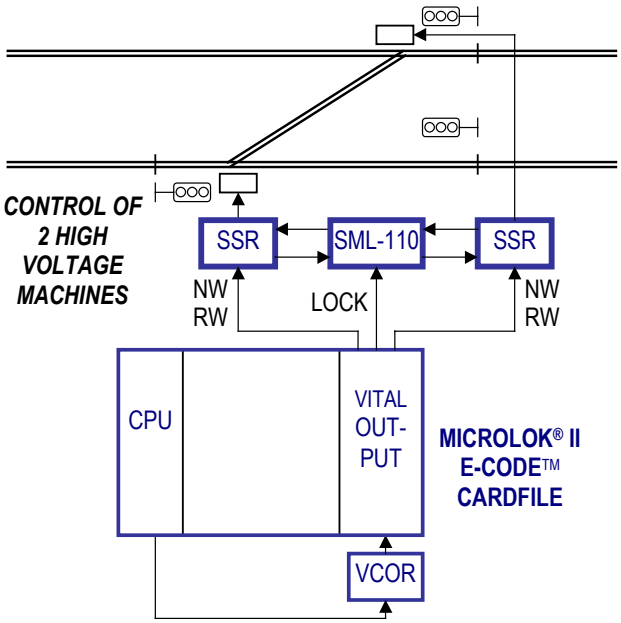

ANSALDO SIGNAL
A Finmeccanica Company

UNION SWITCH & SIGNAL

RSE-1D9
Rev. 7-03

MicroLok® II/E-Code™
Solid-State Switch Machine Modules and Associated Equipment

General Description (cont'd)

The SML-24 is used in conjunction with the SMC for low-voltage switch machine operation. Each SML-24 allows for control of up to two switch machines simultaneously. The maximum current capacity of the SML, which functions as a DC/DC converter, is capable of driving one stalled and one operating switch machine at the same time. Each SMC can control one switch machine. Refer to ***RSE 3A1*** for additional information on these units.The SMC-BN is a biased neutral stand-alone switch machine controller designed to control two GRS switch machines fitted with bias neutral controllers, in tandem. It is designed to replace the lock and overload relays and delivers 1 ampere at 12 Vdc of either polarity. Refer to ***RSE 3A3*** for additional information on this unit.

Specifications and Ordering Information

- Refer to tabulation for Solid-State Switch machine module part numbers.
- Refer to the following RSE catalog cuts for additional ordering information and technical specifcations:
  - SML-110: ***RSE 3A2***
  - SML-24 and SMC: ***RSE 3A1***
  - SMC-BN: ***RSE 3A3***

Solid State Switch Machine Control Equipment	
US&S Order No.	
N47302302	SML-110 Switch Lock (see RSE-3A2)
N47300701	SML-24 Switch Lock w/rack mtg. Plate (see RSE-3A1)
N47300702	SML-24 Switch Lock w/o rack mtg. Plate (see RSE-3A1)
N40103601	PN-150SSR Vital Relay

MicroLok® is a registered trademark of Union Switch & Signal Inc. E-Code™ is a trademarks of Union Switch & Signal Inc.

Wayside Signaling Systems

UNION SWITCH & SIGNAL

RSE-1F1
Rev. 7-03

AF-900™ Series Digital FSK Track Circuits General Information

US&S' AF-900 Series Digital FSK Track Circuit systems provide unmatched capabilities for train detection and delivery of complex train control data to moving transit vehicles. As result, these systems are ideal for management of heavy mass transit traffic with close operating headways, and provide the highest measure of system reliability for advanced functions such as driverless operation. AF-900 Series track circuits are vastly simpler to install, calibrate and maintain than any comparable AF-based systems and require far less of the massive and complex ground material and interfaces if these other systems.

AF-900 Series Track Circuits are now successfully deployed to a variety of major transit properties around the world such as the LA Metro Green Line, Copenhagen Metro and Shanghai Line 2 Metro. Coupled with US&S' other cutting-edge train control subsystems (MicroLok® II wayside and MicroCab® carborne), the AF-900 enables US&S to offer a full-spectrum mass transit Automatic Train Control (ATC) system adaptable to the most demanding needs of any transit operation.

Advantages

- Provides responsive train detection and wide-spectrum cab signal communications;
- Redundant design for continuity of operation and maintenance of headways;
- Essential to advanced operations such as driverless ATC;
- Requires no insulated joints on mainline or station tracks;
- Provides sharp, stable track circuit definition;
- Two or four track circuit (cardfile) options;
- Highly dependable and flexible digital FSK communications;
- Permits delivery of diverse cab signal commands;

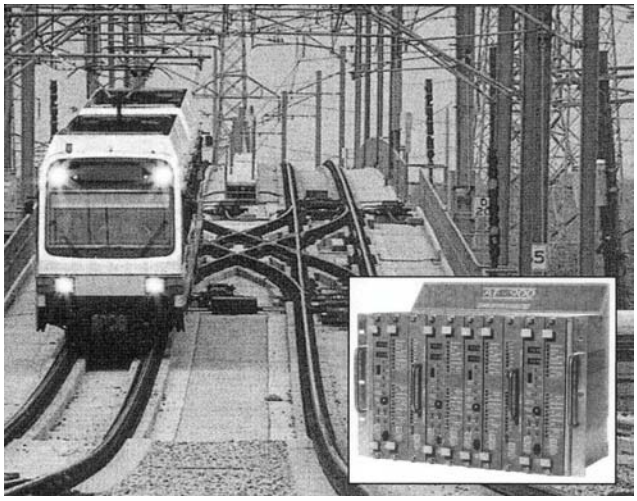

Advantages (cont'd)

- Readily interfaced to US&S MicroLok II controllers;
- Highly immune to stray power and signal emissions of all types (e.g. traction power);
- Configured to prevent cross-talk between track circuits;
- Simple on-site set-up configuration and tuning procedures;
- Track Cable Bonds greatly simplify connections to rails;
- Highly adaptable operating software, allowing future derivatives to be tailored to customer needs.

System Application

The AF-900™ Series Digital FSK Track Circuit is part of an Automatic Train Control System (ATC), providing both train detection and transmission of digital cab signaling data for the Automatic Train Protection (ATP) function of the ATC. Track circuits served by this system include mainline, station areas, turnouts, crossovers, storage yard and highway crossing zones. Major components of the AF-900 Series Track circuits include a System Cardfile (AF-902 or AF-904), Track Coupling Units and a track Cable Bond. In AF-902

(continued on page 3)

UNION SWITCH & SIGNAL

AF-900™ Series Digital FSK Track Circuits
General Information

RSE-1F1
Rev. 7-03

AF-904 General Application:
Non-redundant Control of Four Track Circuits

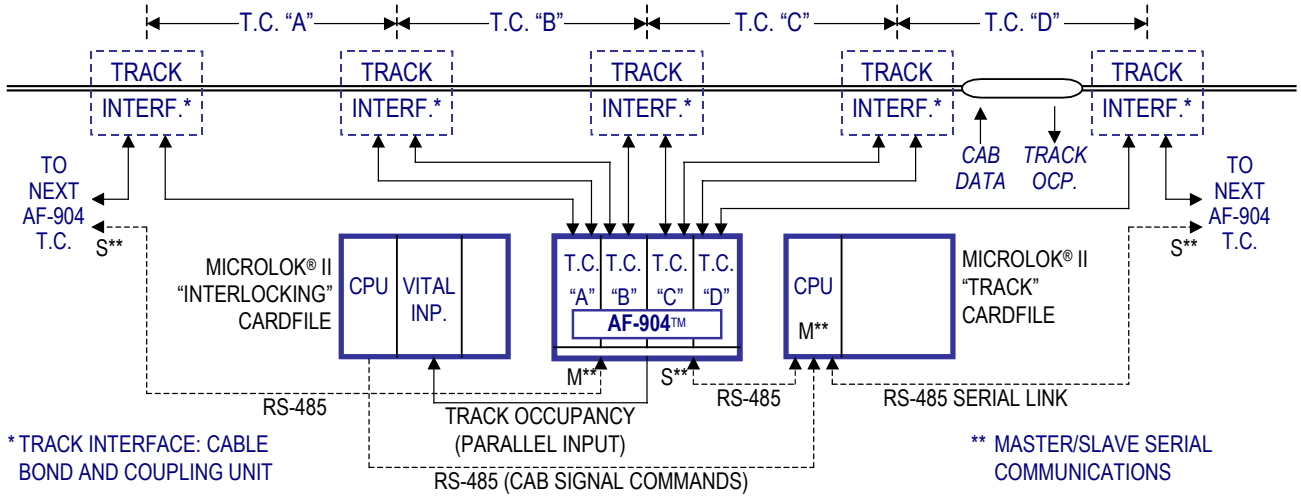

AF-902 General Application:
Redundant Control of Two Track Circuits

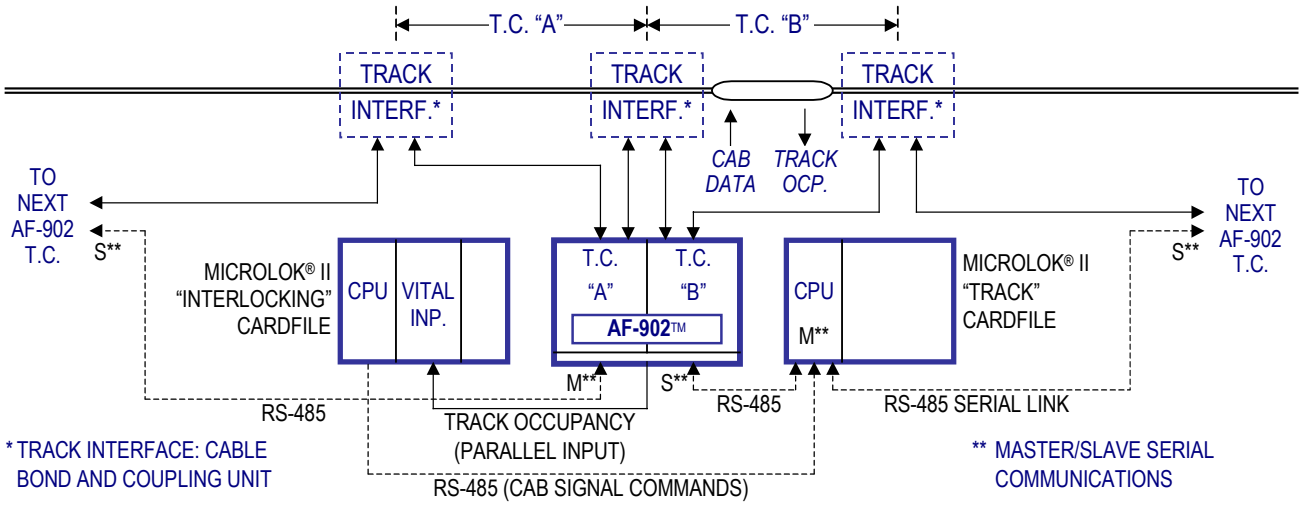

AF-900™ Series Digital FSK Track Circuits
General Information

UNION SWITCH & SIGNAL

RSE-1F1
Rev. 7-03

System Application (cont'd)

Track Circuit applications, the System Cardfile typically uses two redundant subsystems to control two track circuits in driverless train control systems. In AF-904 Track Circuit applications, the system typically uses four non-redundant subsystems to control up to four track circuits in driver-operated train control systems.

AF-900 Series Track Circuits serve specific track circuits along the transit line and are locally managed by track-dedicated US&S "Track" MicroLok II units. (Other "Interlocking" MicroLok II units handle standard interlocking functions such as control and monitoring of switch machines and wayside home signals.).

The Track MicroLok II units generate vital messages (train speed/direction, next carrier transmit frequency, track circuit ID etc.) for the vehicle's MicroCab cab signal system, using AF-900 Series equipment as the digital communications medium. Other messages between the AF-900 Series system and the Track MicroLok II unit include any temporary local speed restrictions and the health of the track circuit. Between interlockings, train detection indications are sent via serial communications link. At interlockings, train detection signals from the AF-900 Series system are routed directly to parallel channel inputs on the interlocking MicroLok II units to speed delivery of shunting indications for interlocking over-switch functions. No track relay is needed for these detection functions.

In storage yard applications, AF-900 Series Track Circuits allow automatic movement of cars for the purpose of making up new trains. The equipment is well suited for short track circuits/slow car movements in the yard, and serves as a highly cost-effective alternative to a system of expensive vane relays. In highway crossing zones, the AF-900 Series Track Circuit eliminates the need for audio frequency overlay track circuits to control highway crossing warning systems. The system is designed to permit application to crossing approach and island circuits.

Signals and messages in the rails are communicated to and from the AF-900 Series cardfiles via simple but highly effective Track Cable Bonds, consisting of a specified length of heavy (e.g. 350 or 500 MCM) cable connected/ arranged between the rails in "S", "O" or "I" arrangement as required by the location. Insulated rail joints are not required at mainline or station locations. At crossovers, turnouts and other areas with high metal content, standard cab loops are used to pass cab signaling data to the rails.

AF-900 Series Track Coupling Units are used to bridge signals between the System Cardfile and the Track Cable Bonds or Cab Loops. These units are tuned to the carrier frequency and provide impedance matching to/from the track. Refer to ***RSE 1F2*** for additional details on AF-900 Series Track Circuits major components.

Basic Track Cable Bond Configuration

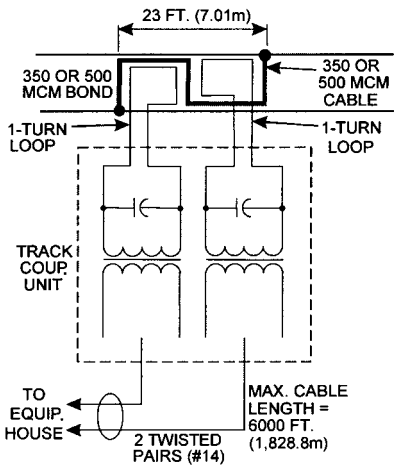

Typical Cab Signal Direct Injection At Crossover

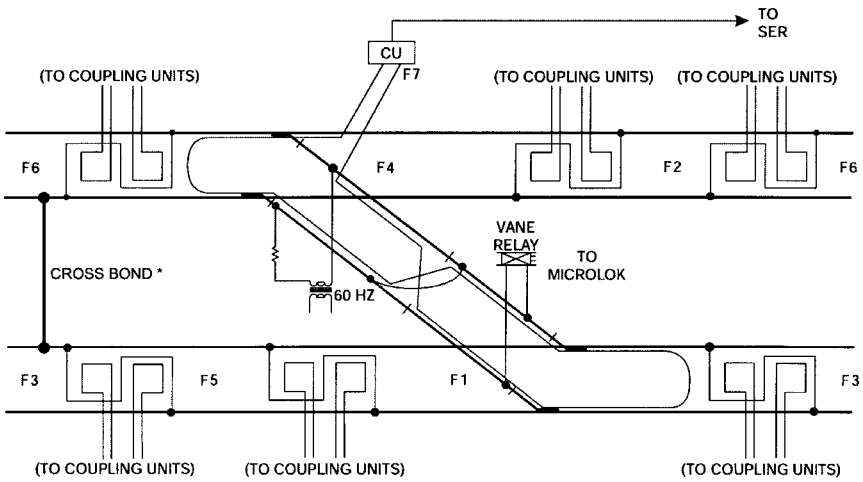

UNION SWITCH & SIGNAL

AF-900™ Series Digital FSK Track Circuits
General Information

RSE-1F1
Rev. 7-03

Typical Rack Installation of AF-900 Cardfiles



Basic System Operation

Each AF-900 Series system vitally monitors the status of one track circuit. An FM, audio frequency carrier is transmitted at one end of the track circuit and received at the other. This carrier is modulated in a binary manner to generate digital cab signal data for the train. Carrier level and a part of the digital message is monitored by the receiver to determine track occupancy.

Train Detection

A key function of the AF-900 Series Track Circuit is to detect the presence of a train in the monitored track circuit; this information is processed by the Interlocking MicroLok II system. Train detection is accomplished in the AF-900 Series System Cardfile by measuring the amplitude of the digital track signal used to deliver data to the vehicle's cab signal equipment. This signal is continually transmitted from the other end of the track circuit with one of eight possible carriers. The Track MicroLok II system determines the vehicle's direction of travel and which AF-900 Series units will function as transmitters and receivers.

While the track circuit is unoccupied, the receiving AF-900 Series circuits continually check the incoming message for proper signal threshold and accuracy. Comparison is made with the signal sent by the AF-900 Series transmit circuits.

If a message is received, but fails accuracy checks, the AF-900 Series unit notifies the Track MicroLok II system of the presence of a train.

When a train shunts the rails of the monitored track circuit, the signal is blocked; this condition is recognized by the receiving AF-900 Series track circuits as a drop below a preset signal threshold, and is reported to the associated Interlocking MicroLok II system. While the shunting train bridges adjacent track circuits, both are reported as occupied. When the train clears a track circuit, the received signal threshold is restored; the AF-900 Series system responds accordingly.

The AF-900 Series Track Circuit includes many vital features designed to eliminate missed track occupancy conditions and false occupancy indications. For example, each track circuit has a unique digital I.D., while different signal carrier frequencies are selected for adjacent and parallel track circuits to help minimize cross talk between these circuits. Staggering of T.C. polarities is not required.

Because the AF-900 Series Track Circuit continually monitors the signal carried in the rails, it also provides for broken rail detection.

Cab Signal Data Transmission

One of the major strengths of the AF-900 Series Track Circuit is its extensive cab signal data transmission capability, made possible through Binary Frequency Shift Keying (BFSK) modulation. A typical set of cab signal data elements includes:

Name	Function
Line Speed	Maximum speed permitted within track circuit target
Target Speed	Desired speed at track circuit target
Distance-to-Go	Distance to target speed
Next Frequency	Carrier frequency of the next track circuit
Track Circuit ID	Identification of present track circuit
Berthed (Door Open)	OK to open vehicle doors at station
Current Direction	Train direction of travel (E or W, N or S)
Change Direction	Reverse train direction of travel
Couple/Uncouple	Couple/uncouple cars during train consist make-up

AF-900™ Series Digital FSK Track Circuits
General Information

UNION SWITCH & SIGNAL

RSE-1F1
Rev. 7-03

Cab Signal Data Transmission (cont'd)

For example, Line and target speed commands could range from 0 to 65 mph in 5 mph steps plus additional speeds of 8 mph and 1 mph. Isolation of commands between track circuits is accomplished by alternating eight available data carrier frequencies (also used for train detection).

A typical range of frequencies is 9.5 to 16.5 kHz in 1 kHz steps and is numbered FO - Fl. On a double-track E-W or N-S line odd-numbered frequencies are assigned to west (or south) bound track circuits, while even-numbered frequencies go east (or north) bound track. This alternating configuration helps assure the required isolation.

In this sample configuration, carrier F1 contains data that informs the train of the next cab signal frequency (F3). On board the train, one receiving filter is tuned to F1 and the other to F3. As the train approaches the Track Cable Bond, signal F1 drops out. Once valid data and level is detected on F3, the vehicle logic ignores the data arriving from the F1 receiving filter. The new data is then decoded and the vehicle logic re-tunes the receiving filter (that was tuned to frequency F1) to the next cab signal frequency in the sequence of track circuit frequencies.

Additional Benefits

The AF-900 Series Track Circuit's unique design and functions provide these added benefits:

- Protected against traction power faults;
- Unaffected by current incursions caused by broken rails, absent or defective bonding, sand, rust, leaves, etc.;
- Shielded against false pick-ups caused by propulsion noise;
- Immune to effects of DC propulsion imbalance;
- Does not require transpositions, balancing loops, etc. to balance rail resistance (tolerates 100% propulsion imbalance without disruption or degradation);
- Immune to improper operation due to crossed or grounded wires or influences such as capacitive and inductive coupling or stray currents;
- Unaffected by direct catenary-to-track or contact rail-to-track faults.
- Unaffected by conducted and inductive emissions from alternating current (AC) variable drive vehicles;

Typical Configuration of Cab Signal Track Circuit Frequencies

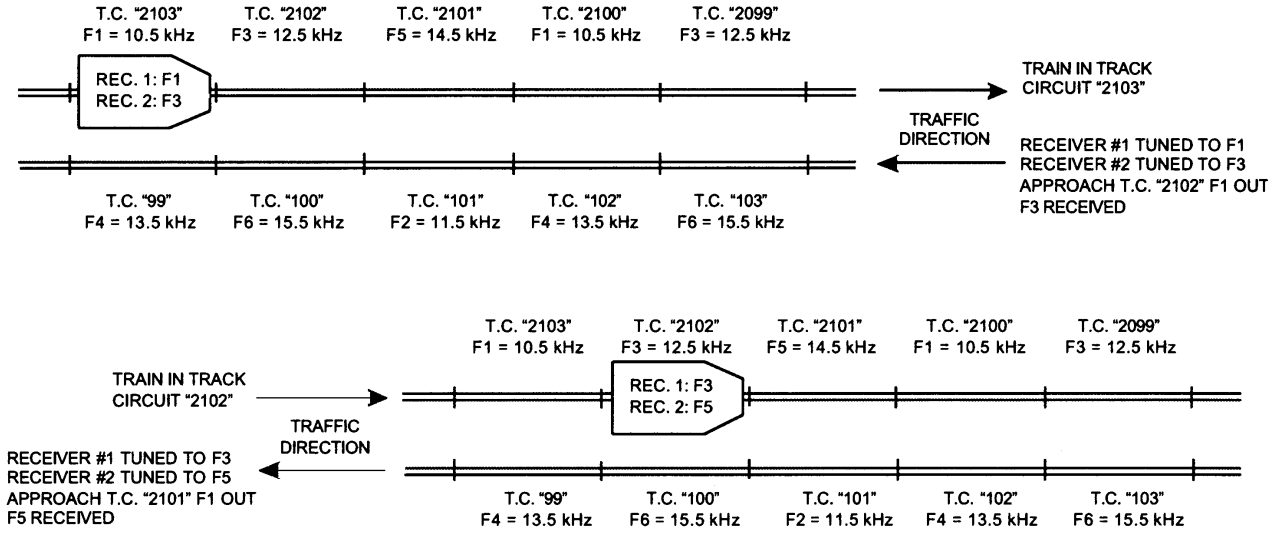

UNION SWITCH & SIGNAL

AF-900™ Series Digital FSK Track Circuits
General Information

RSE-1F1
Rev. 7-03

Additional Benefits (cont'd)

- Minimal auxiliary equipment:
  - No need for L-C tuned decoders or loading capacitors distributed along track circuit;
  - Does not require phase-shifting devices on very short or very long track circuits;
  - No requirements for vane relays, track transformers, lightning arrestors, resistors, balancing impedances, insulated joint couplers, filters or fuses.

Typical System Specifications*

Carrier Freq.:	9.5, 10.5, 11.5, 12.5, 13.5, 14.5,15.5,15.5,16.5 kHz
Modulation:	Binary Frequency Shift Keyed carrier
Baud Rate:	200 BPS
Shift:	±200 Hz
Bandwidth:	500 Hz
T.C. Length:	1000 ft. (max.), 65 ft. (min.)
Shunt Sensitivity:	≤0.25 ohms ballast
Pre/Post Shunt:	≤5.0 ft.
Cab Sig. Message:	36 data, 8 header, 12 CRC bits
Security:	2 messages, CRC cont. reception
Speed Commands:	65 to 0 mph in 5 mph steps, additional: 1 mph, 8 mph
Blocking Speeds:	0, 1, 5, 8, 10, 15, 20, 25, 30, 35, 40, 45, 50, 55, 60, 65 mph
Track Circuit ID No.:	0 to 4095

* Representative of driverless ATC application. Parameters and values will vary with other applications.

Component Ordering and Additional Information

- To order individual components for AF-900 Series Track Circuits, refer to ***RSE-1F2***.
- For additional information on the AF-900 Series Digital FSK Track Circuits, contact your US&S Account Executive.

AF-900™ is a trademark of Union Switch & Signal Inc.
MicroLok® and MicroCab® are registered trademarks of Union Switch & Signal Inc.

UNION SWITCH & SIGNAL

AF-900™ Series Digital FSK Track Circuits Major Components

The AF-900 Series Track Circuit product family performs all of the functions of earlier AF-based systems, but with a much simpler configuration of equipment house modules and track-mounted equipment. On-site user configuration and calibration of the electronic units is straight-forward and requires no complex programming procedures or expensive test/calibration equipment. Most notable, installation and maintenance requirements for the Track Cable Bonds are much simpler than the impedance and mini bonds of predecessor systems.





System Cardfile

The microprocessor-based AF-900 Series System Cardfile performs all logical functions related to train detection, cab signal data transmission, communications with Track MicroLok II units, and conducts continuous internal and local system diagnostics. This rack-mount unit shares many design features with US&S' ATC system sister products (e.g. MicroLok II, MicroCab), including integral PCB front edge control/display panels, menu-driven alpha-numeric LED display and 9-pin serial data port. Standard PCBs utilized in both the AF-902 and AF-904 versions include:

- Controller PCB – Vital logic, track transmissions, receptions, serial communications, automated diagnostics, user on-site configuration.
- Auxiliary PCB – Track transmitter power, track receiver circuits, system CPS
- Power Supply PCB – Operating power for all cardfile PCBs.

A key reliability feature of the AF-900 Series Track Circuit is its redundant design, an essential element of driverless train operations. In the AF-902 version, the system cardfile incorporates primary and back-up sets of control, power and auxiliary boards for supervision of two track circuits. The back-up system computer is in a "warm standby" state and does not have to go through a start-up routine when placed on line. If the on-line AF-902 subsystem detects an internal fault, control is immediately switched to the standby subsystem; this event is reported to the controlling Track MicroLok II system.

Internal disconnect relay contacts switch communications lines with the track and MicroLok II systems (Track and Interlocking) to the on-line subsystem. During system maintenance or contingency operations, the user can manually switch over control to the off-line subsystem.

For applications not requiring the degree of redundancy afforded by the AF-902 version, the AF-904 System Cardfile uses the same number and arrangement of PCBs as the 902. However, the cardfile is configured to allow the PCBs to control up to four track circuits. Both types of cardfiles incorporate integral direction relays for setting the direction of track transmissions.

UNION SWITCH & SIGNAL

AF-900™ Series Digital FSK Track Circuits
Major Components

RSE-1F2
Rev. 7-03

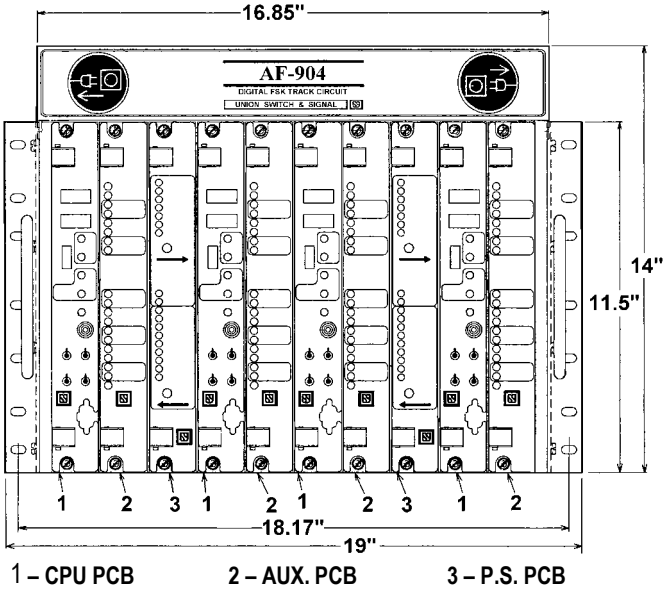

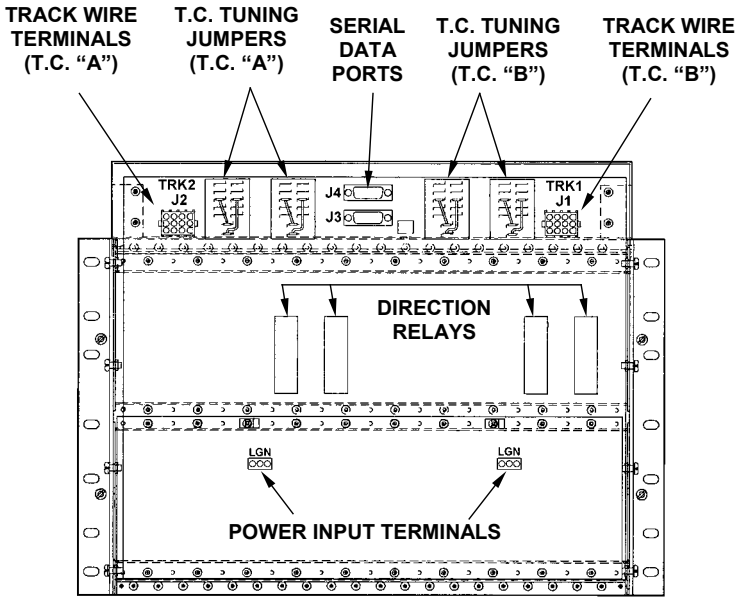

System Cardfile (cont'd)

Each AF-900 Series System Cardfile must pass its own continuous internal diagnostics. In the event of a failed diagnostic, the controlling microprocessor stops transmitting a 500 Hz vital signal to the subsystem Conditional Power Supply (CPS, on Auxiliary PCB). When this signal is removed, the CPS is designed to shut down, preventing cab signal data transmission or indication of a clear track.

The AF-900 Series System Cardfile requires no complex application logic programming. Simple, site-specific parameters such as transmitter power output are programmed using toggle switches and alpha-numeric LED displays. These parameters are stored in EEPROMs mounted on the cardfile backplane (one for each logic board). Thus, when a logic board is replaced, no reprogramming is required. A 9-pin serial port is also provided on the Controller PCB for downloading of stored event and error data.

AF-900™ Series Digital FSK Track Circuits Major Components

UNION SWITCH & SIGNAL

RSE-1F2
Rev. 7-03

System Cardfile (cont'd)

Because of the large dynamic range imposed by the needs of different track circuits, the AF-900 Series System Cardfile incorporates adjustable transformer taps for the different track receiver circuits. These allow for variables such as different track lead lengths.

Adjustments are made via jumpers on the cardfile backplane so that a system reset is not required with changeout of the track interface circuitry.

Track Coupling Unit

The AF-900 Series Track Coupling Unit interfaces the track signals with the System Cardfile receiver and transmitter circuits, and provides for tuning to the track circuit carrier frequency. This weather-proof, wayside-mounted unit contains two independent coupling circuits, each consisting of a transformer (for track voltage step-down) and a jumper-adjusted capacitor bank for frequency tuning. Each transformer/capacitor section serves a respective track circuit end.

Typical Coupling Unit Wayside Installation



Coupling Unit PCB Access

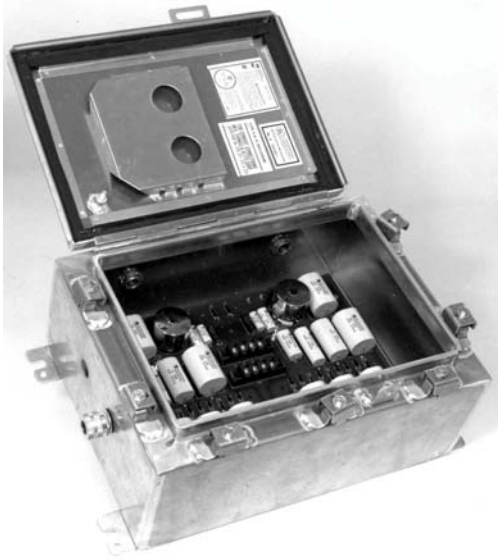

Track Cable Bond and Cab Loops

AF-900 Series Track Circuits use a simple but highly effective successor to the impedance or mini bond. This device is nothing more than a few meters of conductive cable, typically 350 or 500 thousand-circular-mill (MCM), arranged in an "S", "O" or "I" shape depending on track transmission/reception requirements for the particular installation. The end points of the Track Cable Bond are welded to the rails; signals are passed to and from the wayside electronics via a parallel "Track Loop" wire used to air-couple signals to and from the heavy, rail-connected cable.

For crossovers and turnouts, AF-900 Series Track Circuits make use of standard Cab Loop cables, which are better suited for the high metal content (frogs etc.) at these locations (insulated joints retained).

Transmitting track signal currents circulating in the cable are induced into the rails, while received signals are induced into the cable from the rails. This type of bond provides a strong directional vector using the dimensional placement of the cable (total length and width of the cable geometric shape) to set track signal direction.

UNION SWITCH & SIGNAL

UNION SWITCH & SIGNAL

AF-900™ Series Digital FSK Track Circuits
Major Components

RSE-1F2
Rev. 7-03

Typical "S" Track Cable Bond Application

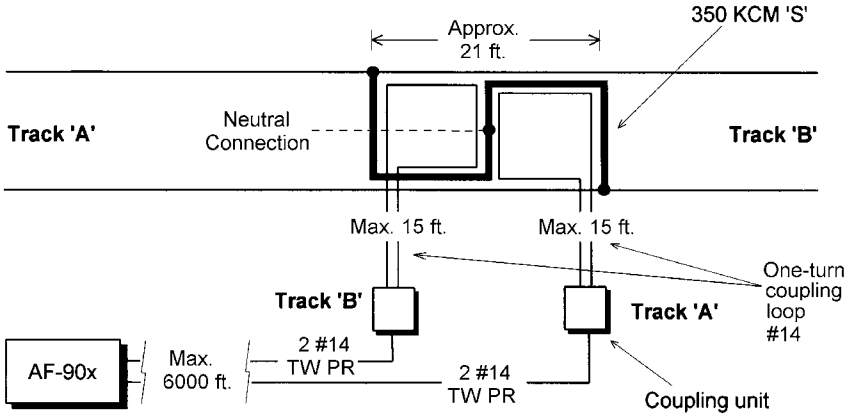

Typical "I" Track Cable Bond Application

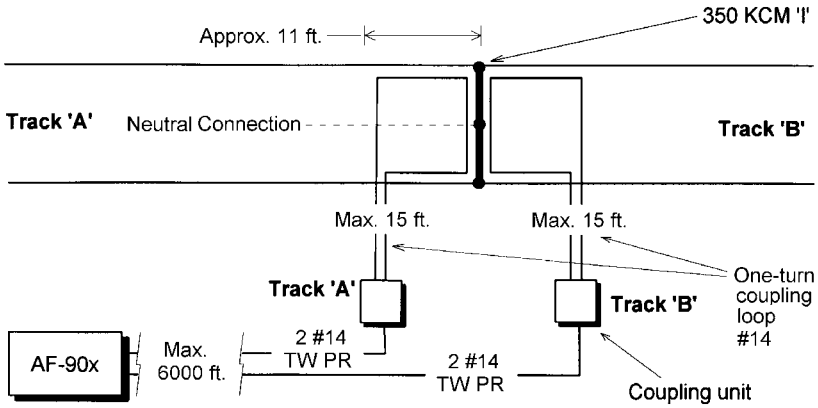

Typical "O" Track Cable Bond Application

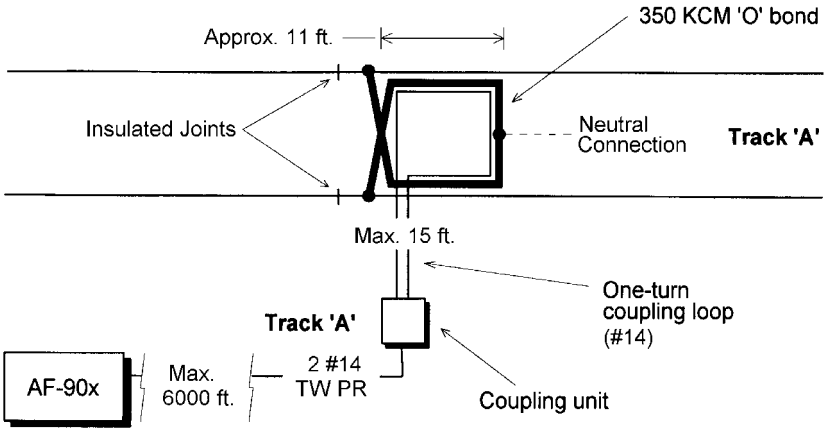

AF-900™ Series Digital FSK Track Circuits
Major Components

UNION SWITCH & SIGNAL

RSE-1F2
Rev. 7-03

Typical Cable Bond Application: Direct Injection

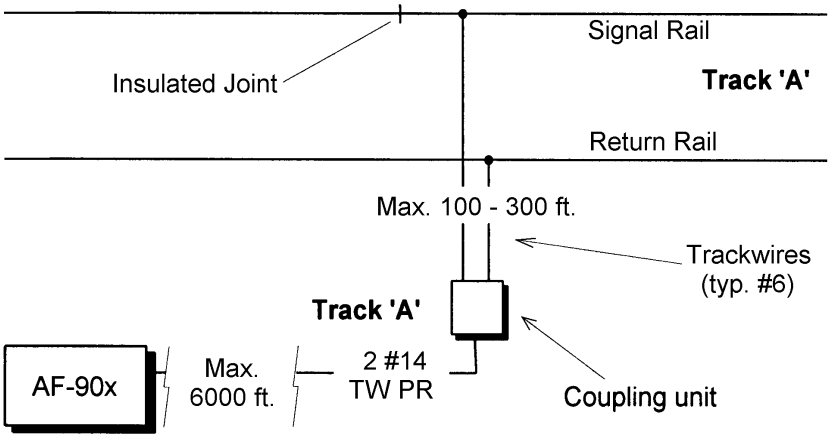

Specifications

System Cardfile

T.C.s Controlled:	AF-902: Two (redundant) AF-904: Four (non-redundant)
Mounting:	Standard 19 inch equip. rack
Plug-In PCBs:	10
Wiring:	Discrete-wire terminals for track connections, 25-pin "D" plug for serial links
Environment:	-25°C to +70°C 95% relative humidity, non-condensing
Power Input:	110/240 Vac @50/60 Hz

Track Coupling Unit

Mounting:	Ground base, pedestal or wall.
External Wiring:	Via "T" conduit box to internal terminals.
Environment:	--40°C to +70°C, 95% humidity (non-condensing)
Power Input:	Not required.
Field Adjustments:	Carrier freq. tuning via capacitor bank jumpers on internal PCB.

Track Cable Bond

Light Rail Application:	600-750 Vdc traction (typical).
Type:	350 or 500 MCM insulated/ jacketed cable.
Typ. Length (e.g. "S")	39 ft. (12M)
Rail Elec. Attach:	Welding via cable terminals.
Rail Mech. Attach:	Flange clips
Ballast Placement:	Above or buried.
Neut. Connect. Point:	For cross-bonding, substation returns, catenary poles, structure ground, etc.
One-Turn Loop:	#12 AWG, insulated Max. loop wire length: 15 ft

Interfaces:

Cardfile/T.C.s:	Via Tuned Coupling Units Twisted-pair #14 AWG, 6000 ft. (1820M) max., 100 ohms impedance max.
Cardfile/T-MicroLok II	RS-485 serial links.
Cardfile Power Input:	Commercial 110/240 Vac source, UPS-compatible
Cardfile Data Download:	RS-232 (9-pin) front panel serial ports
Coupling Unit/Track:	1-turn loop, #12 AWG (stranded/insulated)

UNION SWITCH & SIGNAL

AF-900™ Series Digital FSK Track Circuits
Major Components

RSE-1F2
Rev. 7-03

Ordering Information

- To order individual components for AF-900 Series Track Circuits, refer to tabulations.
- For additional information on the AF-900 Series Digital FSK Track Circuits, contact your US&S Account Executive.

AF-902 and AF-904 Track Circuit Cardfiles				
US&S Order No.	System Type	Power Input	PCBs	Direction Relays
N12200201	AF-902	115 Vac	X	X
N12200202	AF-902	115 Vac	--	X
N12200203	AF-904	115 Vac	X	X
N12200204	AF-904	115 Vac	--	X
N12200205	AF-902	230 Vac	X	X
N12200206	AF-902	230 Vac	--	X
N12200207	AF-904	230 Vac	X	X
N12200208	AF-904	230 Vac	--	X
N12200209	AF-904	115 Vac	X	--
N12200210	AF-904	115 Vac	--	--

AF-902 and AF-904 Cardfile PCBs			
US&S Order No.		**US&S Order No.**	
N12360301	Track Circuit Controller PCB	N12360501	Pwr. Supply PCB
N12360401	Auxiliary PCB		

AF-902 and AF-904 Track Coupling Units	
US&S Order No.	
N37500601	Coupling Unit for inductively-coupled locations (e.g. "S" bonds)
N37500603	Coupling Unit for "direction-injection" locations (e.g. crossovers)
N37500604	Coupling Unit for "cab loop" locations

AF-900™ is a trademark of Union Switch & Signal Inc.
MicroLok® and MicroCab® are registered trademarks of Union Switch & Signal Inc.



Carborne and Integrated Carborne-Wayside Control Systems

Cab Signaling Systems

- MicroCab System General Information
- MicroCab Major Components

Carborne Integrated with Wayside

- Advanced Speed Enforcement System (ASES) – General Information
- i-Cab Intermitttent Cab Signaling System – General Information
- ASES/i-Cab Systems - Major Vehicle Components
- ASES/i-Cab Systems - Major Wayside Components
- Digitrac Train Location System

End-of-Train Systems

- Digitair End-of-Train General Information
- Digitair Model 6699-CC Sense and Brake Unit (SBU)
- Digitair Model 6696 Communications Display Unit (CDU)
- Digitair Model 6680 Communications Interface Unit (CIU)
- Digitair Model 6689 Repeater (NEMA Type)
- Digitair Model 6680 Repeater (CIU Type)
- Digitair Model 6635 Battery Charger/Analyzer
- Digitair Ni-CaD Rechargeable Battery

Misc. Carborne-Wayside Systems

- Train to Wayside Communications System (TWC)
- AFO-Based Transit Vehicle Precision Berthing System

Carborne and Integrated Carborne-Wayside Control Systems

UNION SWITCH & SIGNAL

RSE-2A1
Rev. 7-03

MicroCab® Cab Signaling System General Information

US&S' MicroCab Cab Signal System is the industry standard for dependability and flexibility configuration to customer requirements for well over a decade. Systems are now in revenue service on numerous US Class I railroads, international railroads and mass-transit properties. MicroCab can be structured for basic Automatic Train Stop (ATS) with cab display of wayside signals only or Automatic Train Protection (ATP) with a complex mix of functions such as overspeed protection and brake assurance, as well as Automatic Train Operation (ATO) functions such as speed regulation, station stopping, door control and berthing.

MicroCab is also a key element of the latest driverless Automatic Train Control (ATC) systems such as the Copenhagen Metro, and works in concert with the US&S AF-900 Series Digital FSK Track Circuit to manage a diverse range of vehicle functions for achieving the most demanding headways.

Advantages

- Adaptable to all modes of rail transportation and vehicle configurations;
- Readily interfaced to various carborne subsystems and equipment;
- Basic cab signal control to complex ATP/ATO/ATS applications;
- Suited for driverless vehicle systems and profile-based speed control;
- Readily integrated with intermittent speed control systems;
- State-of-the-art processor and interface electronics;
- Highly flexible application software;
- Certified to latest industry safety and reliability standards;
- Internal or external event recording capabilities;

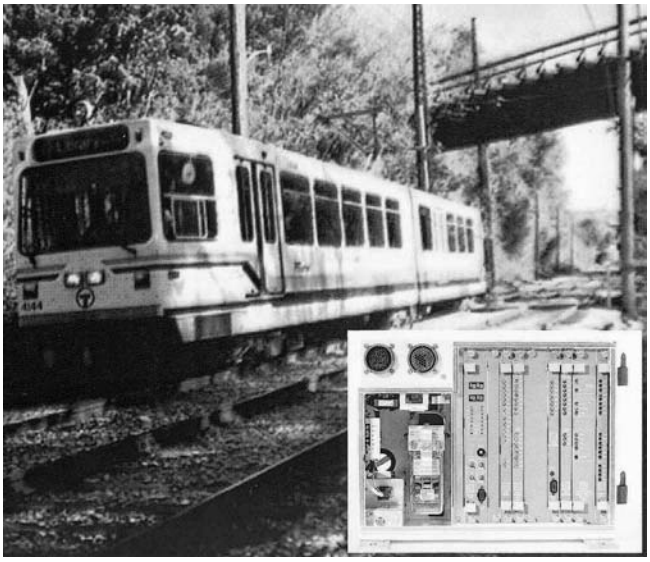

Advantages (cont'd)

- Built-in self test, departure test and diagnostics;
- Low cost, space-saving solid-state controlling enclosure;
- Aspect Display Units incorporate latest operator display/control technologies;
- Modular design expedites upgrades and maintenance.

System Applications

The MicroCab system may be used for any carborne application using continuous cab signaling, including heavy freight or commuter rail locomotives, heavy or light-rail mass-transit cars (single or married-car trainsets) and automated people-movers.

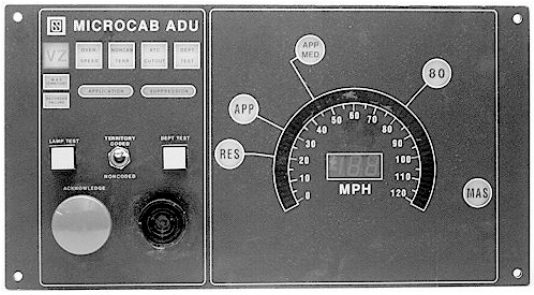

For more information, contact your US&S Account Executive.

ANSALDO SIGNAL
A Finmeccanica Company

www.switch.com

UNION SWITCH & SIGNAL

RSE-2A1
Rev. 7-03

MicroCab® Cab Signaling System
General Information

Basic Locomotive Automatic Train Protection

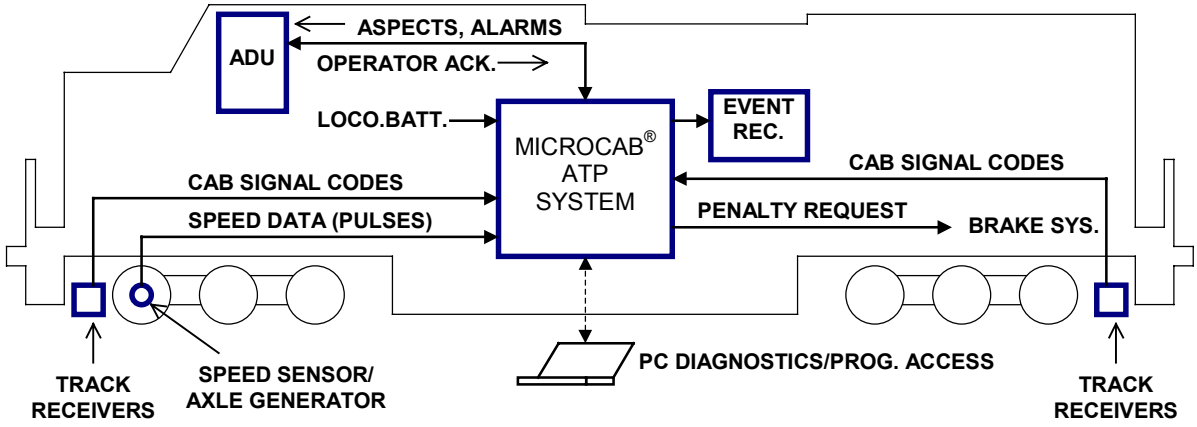

System Applications (cont'd)

ATP-related control and monitoring functions available with MicroCab can include:

- Cab signal display only;
- Cab signal with:
  - Automatic Train Stop (ATS);
  - Overspeed Automatic Train Control (ATC);
  - Brake assurance;
  - Driverless operation ATC/ATO;
  - On-board departure test;
- Single-unit or redundant (failover-based) controlled systems.

ATO/ATS-related control and monitoring functions available with MicroCab can include:

- Speed regulation;
- Station stopping and departure;
- Precision berthing;
- Skip stop;
- Turn-back;
- Door control;
- Passenger annunciation;
- Automatic station identification;
- Train to Wayside Communications interface;
- Automatic Vehicle Identification (AVI);

For ATP and ATO/ATS operations, MicroCab is fully compatible with a variety of external subsystems and equipment such as:

- External event recorders and Alerters
- Master controllers (monitoring and decoding);
- Brake valve controllers;
- Brake pipe pressure transducers;
- Trainlines (monitoring and control outputs);
- Vehicle health monitoring system (e.g. TCMS);
- LON Works communications channels.

MicroCab can also be interfaced with intermittent cab signal systems to provide, for example, restrictive aspect indications or positive stopping at interlocking red signals. For this application, MicroCab is available as an integral subsystem of US&S' Advanced Speed Enforcement System (ASES). Refer to ***RSE-2B1*** for additional ASES details.

The MicroCab hardware is adaptable to the full range of standard or customized cab signal code rates and carriers, carrier-filtering devices, axle speed sensors, brake, throttle and trainline equipment, Aspect Display Units (ADUs), alerters and external event recorders. The system can be configured for operation with single or multiple-cab carrier frequencies ranging from standard 60/100 Hz rates to audio frequencies used on light or rail mass-transit properties. MicroCab can also be configured for full or partial cut-out of system control by the operator or maintainer. Built-in controls allow precise calibration of variables such as wheel size, carrier current pick-up levels and operator response times to overspeed and restrictive change in signals.

MicroCab® Cab Signaling System General Information

UNION SWITCH & SIGNAL

RSE-2A1
Rev. 7-03

Typical Mass Transit Vehicle or Train Configuration

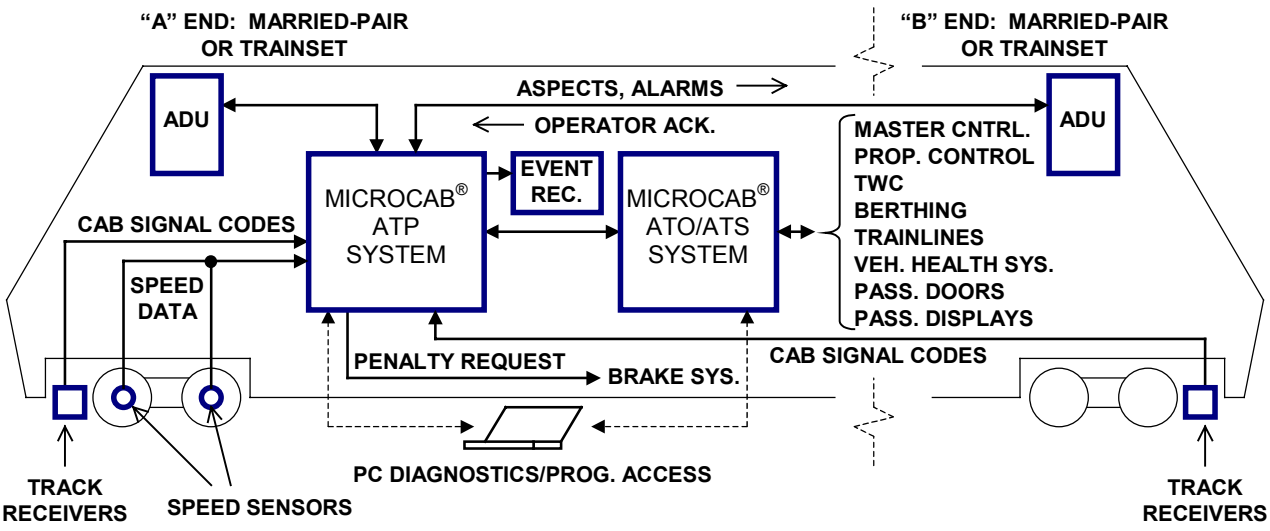

Safety and Reliability Certification

MicroCab vital software has been developed and controlled according to CMM Level II principles; US&S has successfully achieved this software development requirement. In addition, the MicroCab system has already been independently approved on several major railroads and transit authorities with respect to:

- Operational Safety Design
- Approved Hazard and Safety Analysis
- Environmental Testing & Documentation

Test Equipment

MicroCab is supported with field and shop test equipment to check and adjust all hardware and software. The test equipment includes:

- Bench Test Equipment (BTE) – US&S ' BTE is a semi-automated, test platform designed for testing US&S MicroCab circuit boards and other devices such as Aspect Display Units (ADU). The STS also includes an integrated computer system, which contains all the necessary test software for each circuit board test procedure. Refer to ***RSE-8A1*** for additional information.
- Portable Test Unit (PTU) – US&S' PTU used to view diagnostic information on an installed MicroCab system. The PTU consists of a laptop computer which is connected directly to a serial

Test Equipment (cont'd)

data port on the MicroCab system under test, and customized PTU diagnostic software. This software is installed on any commercially available laptop PC. Refer to ***RSE-8A2*** for additional information.

- Portable Test Equipment (PTE) – US&S' PTE is designed to check out MicroCab as a complete on-board system. The PTE is typically employed when the MicroCab system has been removed from the vehicle for shop maintenance, but can also be utilized in an on-board mode provided AC and battery power can be supplied to operate the unit, and equipment rack connectors are accessible for PTE test cables. Refer to ***RSE-8A3*** for additional information.

Additional Information

- For additional information on MicroCab system applications, contact your US&S Account Executive.
- Refer to ***RSE-2A2*** and RSE Catalog Section 8 for additional information on key MicroCab components

UNION SWITCH & SIGNAL

Carborne and Integrated Carborne-Wayside Control Systems

UNION SWITCH & SIGNAL

RSE-2A2
Rev. 7-03

MicroCab® Cab Signaling System Major Components

The MicroCab product line contains the full range of control/recording electronics, cab displays and undercar apparatus to equip all types of locomotives or mass transit cars. The products described in this catalog section are a small representative sample of the equipment US&S has supplied to numerous U.S. and international railway systems.

System Enclosures

The MicroCab system's controlling electronics are housed in a weatherproof, welded steel Equipment Enclosure that can be sized and placed as required anywhere in the vehicle. Access to internal modules is through a single lock or seal-protected door that can also incorporate a small access plate to enable period connection of a diagnostic PC to the main internal logic board. Several "Veam" brand 1/4-turn quick-disconnect plugs on the housing permit fast connection of power and signal wiring, and rapid change-out of the entire unit. The enclosure may also incorporate external cut-out switches and status indicator lamps as needed. The typical complement of internal modules includes:

- One (ATP) or two (ATP and ATO) MicroCab cardfiles
- A US&S PN-159B vital relay interface to the brake system (see RSE-8D1).
- A decelerometer (i.e. Brake Assurance Module) for measuring the vehicle braking rate to assure that the minimum rate is achieved.
- Power/battery conditioner modules for converting vehicle battery to proper levels for internal electronics and, if required, providing regulated power to external equipment such as the Aspect Display Units (ADUs)
- An EMI filter board for protecting internal circuits from unwanted voltage transients.



Cardfile/Equipment Enclosure

MicroCab systems are controlled by an ATP electronics cardfile/equipment enclosure for the basic overspeed protection function. A separate unit is typically included for ATO-related functions and the interface to a Train-to-Wayside communications system, although both ATP and ATO functions can be consolidated in one cardfile in some applications. MicroCab cardfiles utilize the familiar Eurocard plug-in PCB design which features integral front control/display panels and all switches, LED displays and PC ports for on-unit maintenance and reprogramming. The typical MicroCab ATP circuit board set includes:

- 332 Logic PCB – This 32-bit microprocessor board performs the essential MicroCab overspeed regulation function and manages the automated Departure Test sequence. It incorporates switches and LED displays to allow various on-unit configuration adjustments and display of stored event and error logs. The 332 Logic PCB can also serve as an Event Recorder for cab signal functions and selected external indications (e.g. Master Controller actions). In addition to EPROM-based memory, the 332 Logic board can incorporate a front-removable PCMCIA memory card for additional data. A standard PC-compatible 9-pin serial port on the front panel allows event/error log downloading to a laptop PC.

UNION SWITCH & SIGNAL

RSE-2A2
Rev. 7-03

MicroCab® Cab Signaling System
Major Components

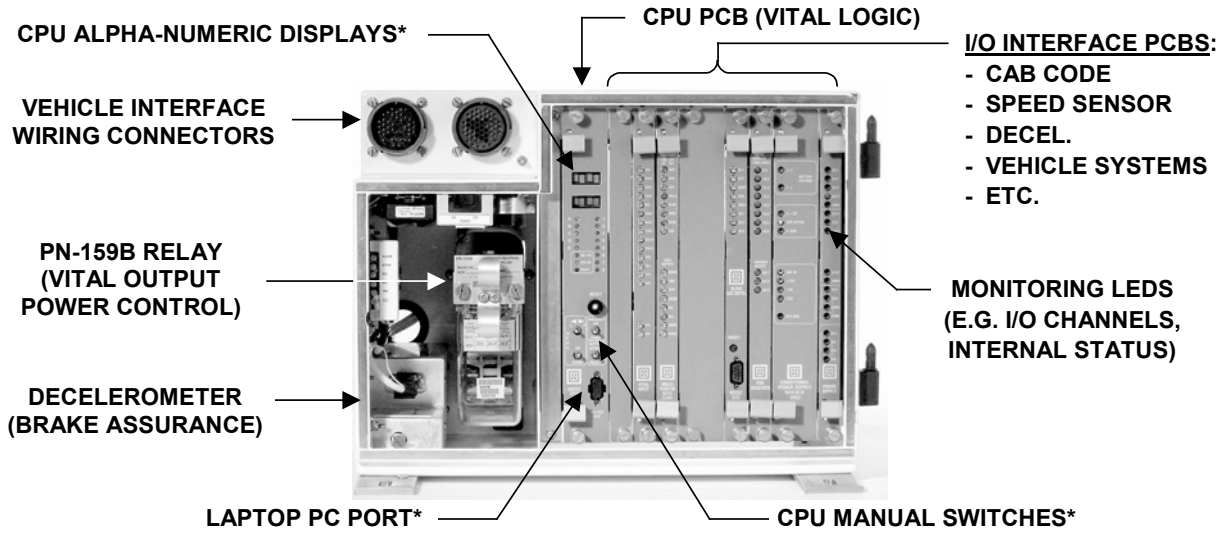

*FOR SYSTEM CONFIGURATION, EVENT DOWNLOADING, DIAGNOSTICS, ETC.

- Filter/Demodulator PCB – MicroCab Filter/Demodulator PCBs take the cab signal carrier detected from the rails and ensures that a "clean" signal is prepared for code processing. These boards are available for standard carrier signals in the 60-250 Hz range or AF range.
- Decoder CPU PCB – This PCB incorporates a separate microprocessor for checking and processing the cab signal code within the received carrier signal. The code is then sent to the 332 Logic PCB.
- Vital Input PCB – The Vital Input PCB interfaces all vital inputs to the 332 Logic CPU board such as acknowledge, cut-out and ADU switch inputs, Master Controller positions, V-zero/No-Motion indications and trainline inputs.
- Vital Output PCB – This PCB drives various outputs commanded by the 332 Logic PCB such as brake application requests, audible alarms, ADU speed readings and other indications.
- Multi-Function PCB – The typical MicroCab Multi-Function PCB processes speed inputs from the vehicle's speed sensors, generates signals for the CPU-controlled Departure Test and processes the analog measurements from the decelerometer.
- Conditional Power Supply (CPS) – This board powers the PN-159B vital relay under the control of the 332 CPU board. CPS power is removed from the PN-159B (brake application request) in the event the CPU detects a fault.

A wide variety of other special-purpose boards, such as Non-Vital I/O, Serial Communications and TWC interface are available for MicroCab ATP and ATO/ATS applications.

Decelerometer

MicroCab systems employ the latest in decelerometer (i.e. Brake Assurance Module) technology. The MicroCab decelerometer is incorporated in the main MicroCab vehicle Enclosure, and can be oriented as needed in accordance with the vehicle's direction of travel. This bi-directional unit incorporates an electrolytic tilt sensor to measure accelerations, and replaces previous uni-directional mercury slosh tube decelerometers. The typical deceleration sensing range of the decelerometer is 1.0 to 1.8 mphps. Refer to ***RSE-8E1*** for additional information.



MicroCab® Cab Signaling System Major Components

UNION SWITCH & SIGNAL

RSE-2A2
Rev. 7-03

Aspect Display Units

US&S designs and builds MicroCab Aspect Display Units (ADUs) to precise customer specifications for cab operations. All possible designs (e.g. vertical, horizontal, rear-connected, top/bottom-connected) are provided. These units can incorporate multi-color indicator lamps and illuminated pushbuttons for functions such as:

- Overspeed warning;
- Brake request and suppression;
- Deceleration rate achieved;
- Velocity zero;
- Departure Test in progress;
- ATP system cut-in/out;
- Cab/non-cab territory location and select;

The typical MicroCab ADU shows vehicle speed in both digital and analog form; the analog display consists of a semi-circle of LEDs that mimic old style speedometer needle movements. ADUs can also incorporate the cab signal acknowledge switch and audible alarm for overspeed situations. For more complex system applications and functions, US&S ADUs can incorporate their own microprocessor logic and serial communi-cations link with the MicroCab vital logic.

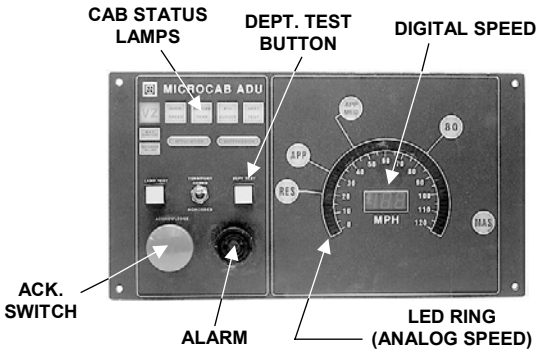

Track Receivers

MicroCab Track Receivers employ two coils, one for each rail, to assure maximum performance over a variety of operating conditions. Weatherproof, heavy-duty construction is used in all components to assure long periods of trouble-free service in the abusive environment under the vehicle. US&S produces two basic types of receivers, including units for cab signal systems receiving standard 60 and 100 Hz carrier signals, and for systems receiving audio-frequency carrier signals (e.g. 4550 Hz).

Track receivers are available with a full fiberglass enclosure to provide enhanced protection against flying debris. Refer to ***RSE-8B1*** for additional data.

Basic 60/100 Hz Cab Signal Track Receiver

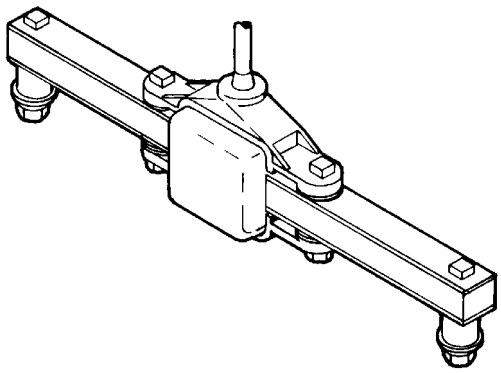

Typical AF Track Receiver Vehicle Installation

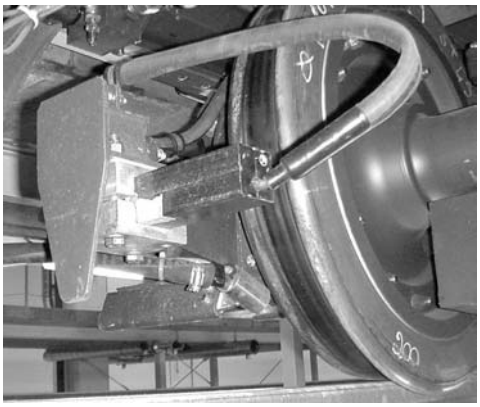

Crashworthy Event Recorder

US&S can augment the MicroCab system with an independent, FRA-compliant crashworthy Event Recorder to store critical vehicle data in a secure location apart from the MicroCab cardfile. In the typical application, the Recorder consists of a Crash-Proof Memory (CPM) Module, a CPU that performs the logic and interface to the CPM, a Serial Interface PCB that interfaces to the main MicroCab system, a Discrete Input Module to interface to local vehicle digital, analog and frequency inputs, a diagnostics port and a LON Works Interface Module. The CPM is compliant with IEEE 1482.1-1999 as required by the FRA.

UNION SWITCH & SIGNAL

RSE-2A2
Rev. 7-03

MicroCab® Cab Signaling System Major Components

Alerter Subsystems

MicroCab systems can incorporate a vital or non-vital Alerter Subsystem (a.k.a. “Vigilance Monitor) to provide an means of triggering the vehicle’s penalty brake system independent of the main ATC/ATP cab signal system in the event of an operator problem. The typical MicroCab Alerter is housed in a separate cardfile or electronics module, incorporates a separate set of interface circuits to monitor the operator and output a penalty brake request. US&S can adapt the design of the Alerter subsystem to meet any customer requirements.

Additional Information

- For additional information on the MicroCab systems and components, contact your US&S Acount Executive.

MicroCab® is a registered trade mark of Union Switch & Signal Inc.

Carborne and Integrated Carborne-Wayside Control Systems

UNION SWITCH & SIGNAL

RSE-2B1
Rev. 7-03

Advanced Speed Enforcement System (ASES®) General Information

Continuous cab signaling was introduced to increase the safety and efficiency of train operation. Continuous cab signaling brings the wayside signal aspects inside the locomotive cab so the train operator continuously and readily can see the signal-aspect displays regardless of weather or terrain. Additionally, continuous cab control systems enable a train's speed to be automatically reduced if the operator does not slow the train in response to a downgraded cab signal. To increase the effectiveness and the level of safety of continuous cab control systems, it became apparent that a means of enforcing positive stop and civil speed restrictions was needed. In response to these requirements, Union Switch & Signal has developed the Advanced Speed Enforcement System (ASES®).

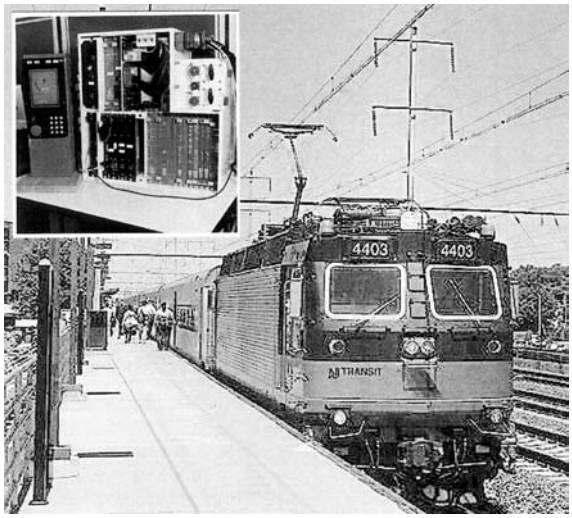

General Description

The US&S ASES system typically consists of the following major subsystems and products:

- Intermittent-based Speed Enforcement Subsystem (SES):
  - On-board cardfile (controlling electronics);
  - On-board RF antenna for reading track Transponders
  - Track-mounted wayside Transponders (active and passive)
  - Wayside Transponder Encoders for reprogramming active Transponders
- MicroCab Continuous Cab Signal (CCS) subsystem:
  - On-board cardfile (controlling electronics) independent of the SES cardfile;
  - Track receivers for picking up cab signal codes from rails;
- LCD-based Aspect Display Unit (ADU) to show both SES and CCS indications and accept train operator inputs.
- Axle speed sensors to feed vehicle speed data to both the SES and CSS subsystems;
- Event Recorder subsystem to collect data from both the SES and CCS subsystems.

Refer to ***RSE-2A1, 2A2*** and ***2B2*** for additional information on these products.

MicroCab Continuous Cab Signaling System (CSS™)

The MicroCab component of ASES is a traditional inductive cab signaling and control system, which continuously receives coded signal aspects and speed commands via the rails. These codes are detected by pick-up coils mounted under the vehicle, and are then directed to filters that detect the coded carrier signals. These signals then are routed to the MicroCab on-board processor.

The MicroCab component of ASES displays block status to the train operator, monitors train speed, alerts the train operator if the speed limit is being exceeded, and automatically stops the train if the operator does not acknowledge a more-restrictive signal-aspect change or an over-speed warning and reduce the train's speed accordingly.

Speed-Enforcement System (SES™)

The SES component of ASES provides enforcement of civil and signal speed restrictions and enforces a positive stop profile after the system detects an "approach" aspect displayed in advance of a red signal. Release of the train, at a home signal at stop, is permitted only after the train operator requests, receives and correctly inputs a six-digit pass code on a keypad integrated within the flat-screen display mounted in the vehicle cab. An intermittent cab signaling and control system, the SES component does not unnecessarily restrict traffic, and it regularly re-computes braking profiles to improve safety and efficiency.

UNION SWITCH & SIGNAL

RSE-2B1
Rev. 7-03

Advanced Speed Enforcement System
General Information

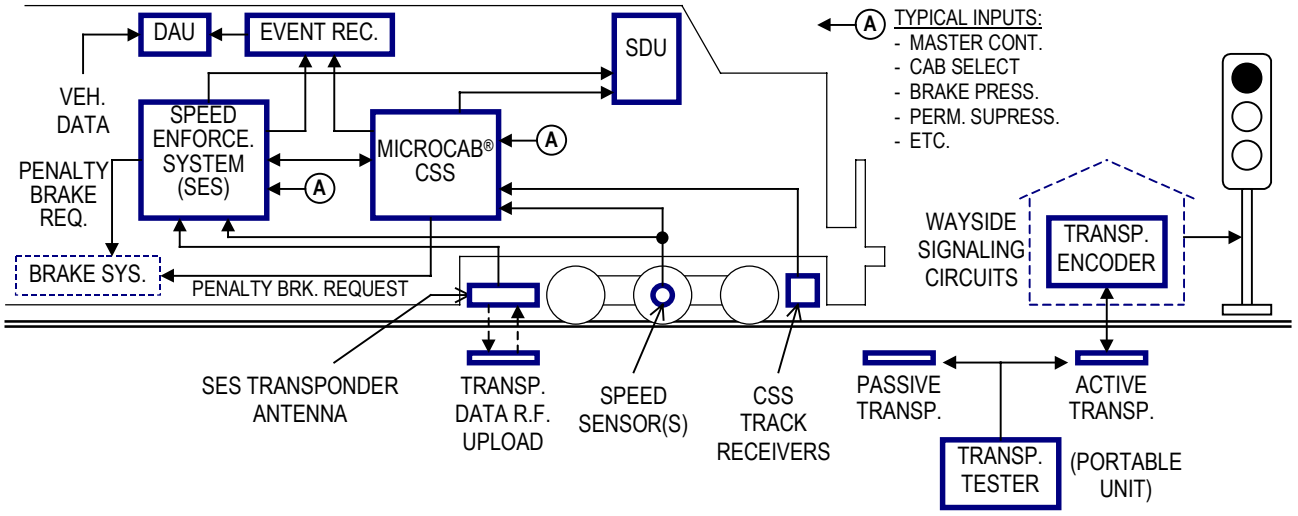

Speed-Enforcement System (cont'd)

The SES consists of wayside house or case-mounted encoders, track-mounted Transponders, an antenna mounted on the undercarriage of the locomotive or a consist's power unit, and an on-board processor.

Because information is transmitted to the train through the on-board SES antenna only when the train passes over a Transponder, this system is defined as being intermittent. When the system is powered "on," the SES on-board antenna emits a continuous 27 MHz RF signal; and when the train passes over a Transponder, the SES on-board antenna powers the Transponder. This triggers a 4.5 MHz RF transmission from the Transponder, and this transmission can contain various information such as current signal aspect, distance to the next Transponder, grade, territory type, civil speed restrictions and other information that has been programmed into the Transponder.

The data received from the Transponder then is relayed to the on-broad processor, which compares the train's actual speed with its allowable speed. If the train speed exceeds the allowable speed, the on-board processor calculates a nominal braking profile that the operator must follow to bring the train within the speed limit or to a complete stop. The train operator must control the train's speed within the boundary of the speed profile until the required speed or a stop is achieved. If the train operator does not follow the authorized speed profile, the processor will request a braking command to automatically enforce the required speed or stop in advance of a red signal.

A display in the locomotive or transit vehicle cab provides, in numerical and graphical representations, actual speed, target speed, target distance, over-speed, braking-profile status and system status to the train operator.

Advantages

- Train speed compared to allowable speed programmed in Transponder.
- Precise Transponder programming results in optimized braking for train type and wayside characteristics.
- Nominal braking profile calculated to allow operator to reduce train speed to new limit as defined by Transponder.
- Enforced positive stop in advance of a red signal, even at train speeds less than 20 mph.
- Suitable for application in any type of rail territory (including dark territory) to provide speed enforcement.
- Temporary speed enforcement can be provided in areas where track crews are working or wherever a temporary speed restriction is required.

Application

US&S can integrate its MicroCab continuous cab signal system, the SES intermittent Transponder-based system, and an FRA-approved event recorder into ASES for service on different types of cars and locomotives. For example, ASES was applied to seven different types of New Jersey Transit (NJT) vehicles, and is integrated with NJT's 9-aspect, dual-carrier cab signal system. This type of integration is done to provide a continuous cab signal system for operation in existing cab signal territory and a Transponder-based intermittent control system for civil speed restriction, brake-profile calculation and positive train stop (PTS).

Advanced Speed Enforcement System
General Information

UNION SWITCH & SIGNAL

RSE-2B1
Rev. 7-03

Application (cont'd)

ASES can be applied to other properties already equipped with continuous cab signaling, or the SES portion of the system can be applied alone, in dark territory, for example, to achieve civil speed enforcement and positive train-stop without the expense of continuous cab signal codes being transmitted through the rails. Additional application characteristics of key ASES components include:

SES Antenna

- Train-mounted;
- Continually scans for Transponders by emitting a 27-MHz signal;
- Reads 4.5-MHz signal transmitted by Transponder and coded with train-control data;
- Performs checks to ensure antenna and vehicle-mounted transmission unit are functioning correctly.

SES Transponder

- Mounted on ties between the rails;
- 180-bit user data capacity;
- Passive version transmits message that can contain civil speed limits, distance to next Transponder, grade and other information to SES antenna;
- Active version is installed at signal locations to provide dynamic data, such as signal aspects and track conditions, to a passing train;
- Operation is immune to extreme temperatures, precipitation, ambient light or dirt.
- Requires no external power source.

Each Transponder is programmed to provide the distance to the next Transponder's location to verify the next Transponder is in place. If the on-board processor does not detect the next Transponder (based on distance computations), it's programmed to invoke a speed restriction until another Transponder is detected.

Typical Transponder "telegrams" can include:

- Limit of Authority information:
  - Aspect;
  - Signal type;
  - Track gradient;
  - Distance to increase point;
  - Target speed and target signal type;
  - Distance to target;
  - Route
- Speed control for movement in/out of sidings;
- Permanent and temporary civil speed restrictions;
- ID of Transponder-installed areas;
- Territory (SES-only, CSS-only, etc.)

SES On-Board Processor

- Compares train speed to speed limits imposed by the most recently read Transponder and current cab code.
- Calculates nominal braking profile required to reduce train speed to the latest required limit.
- Displays braking target speed (in an easy-to-view graphical representation) to train operator.
- Monitors operator compliance with authorized braking profile.
- Requests braking command if train operator does not follow braking profile.
- Provides release from stop at home signals only after a valid pass code is requested, received and inputted properly by the train operator, providing an additional margin of safety at interlockings.

Typical Civil Speed Limit Control

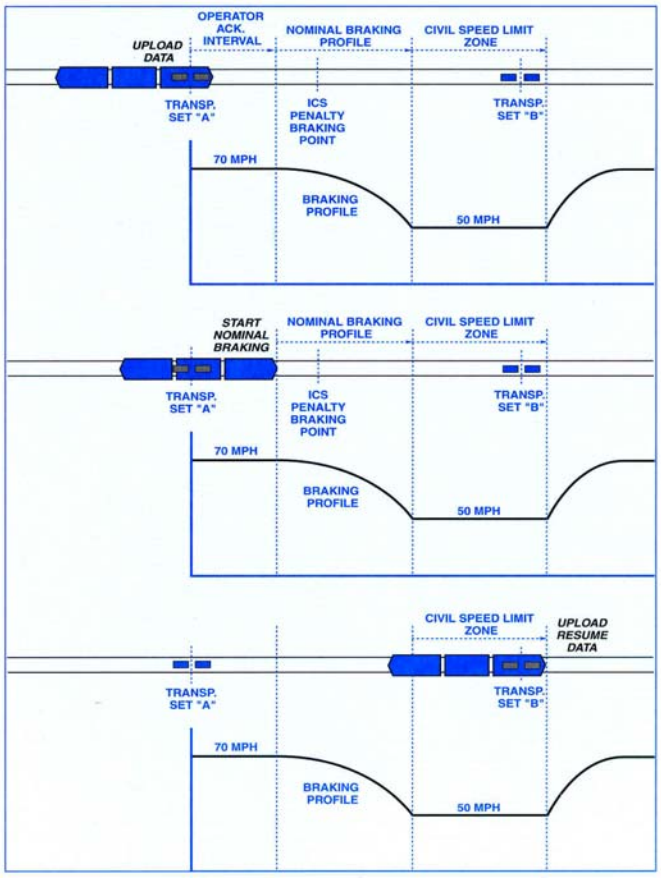

UNION SWITCH & SIGNAL

Advanced Speed Enforcement System
General Information

RSE-2B1
Rev. 7-03

Application (cont'd)

In a typical installation, the processor triggers an audible alarm to warn the train operator when the train enters a speed-restriction zone and when operator-controlled braking should begin. At the same time, the train's current speed and a braking target speed are displayed to the operator in the cab.

If the operator responds in accordance with the authorized speed profile, the processor takes no further action. If the operator does not control the train's speed within the profile, the processor automatically requests penalty braking, via an independent braking system valve, to stop the train. No operator action taken after the penalty braking point can affect enforcement, and the braking system will enforce a train-stop penalty.

Specifications and Ordering Information

- Contact your US&S Account Executive for ASES specifications and ordering information.
- Refer to ***RSE-2B3*** and ***2B4*** for ASES major components.

Typical Double Active Transponder Group

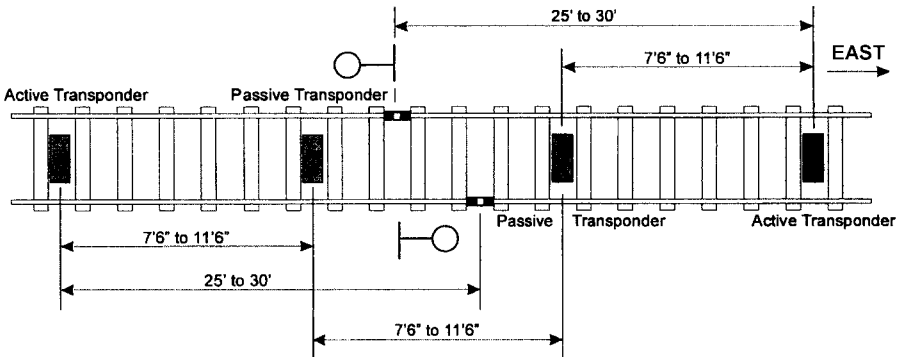

Typical Single Active Transponder Group

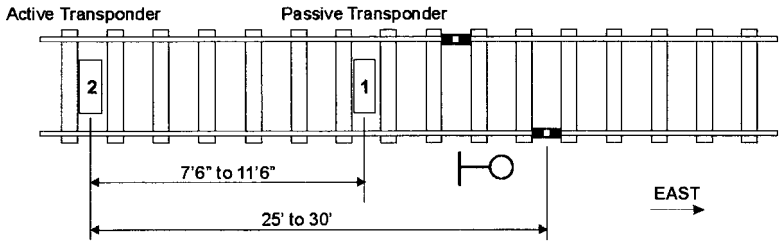

Typical Passive Transponder Group

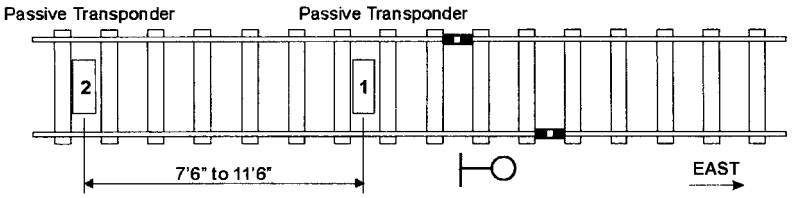

Typical Single Active and Double Passive Transponder Group

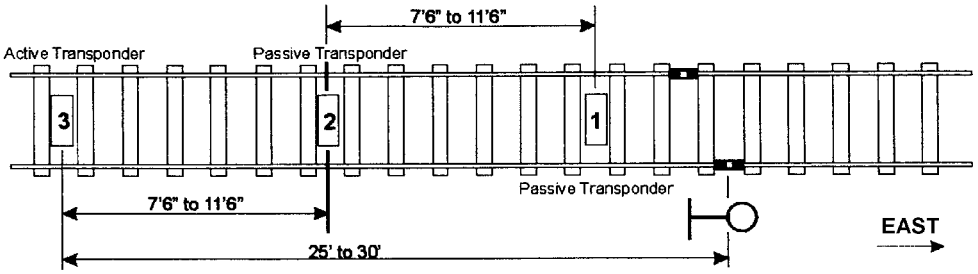

ASES® is a registered trademark of Union Switch & Signal Inc.

Carborne and Integrated Carborne-Wayside Control Systems

UNION SWITCH & SIGNAL

RSE-2B2
Rev. 7-03

i-Cab™ Intermittent Cab Signaling System General Information

The US&S i-Cab intermittent cab signaling (ICS) system provides for positive enforcement of speed limits and stop commands. It does not unnecessarily restrict traffic and regularly recomputes braking profiles to improve operating efficiency. The i-Cab system operates as a vital, functionally independent system that can work in a stand-alone mode or be overlayed onto an existing signaling system. This system is based on proven technology that's been in revenue service for over two decades. i-Cab provides unmatched flexibility for diverse applications, including the ability to serve as a foundation for communications-based signaling, and offers significant cost advantages over Positive Train Separation or Positive Train Control systems.

General Description

The i-cab ICS system consists of carborne and wayside subsystems which communicate via RF antenna and transponder technology. Carborne i-cab elements include a processor unit and an undercar-mounted antenna that continuosly emits an unmodulated 27mHz RF signal to the wayside to activate transponders as the vehicle passes over them. The wayside subsystem features discrete RF transponders to upload a variety of data to the passing train.

Advantages

- Train speed compared to allowable speed programmed in Transponder.
- Precise Transponder programming results in optimized braking for train type and right-of-way characteristics.
- Nominal braking profile calculated to reduce train speed to new limit as defined by Transponder.
- Suitable for application in any type of rail territory (including dark territory) to provide speed enforcement.
- Temporary speed enforcement can be provided in areas where track crews are working or wherever a temporary speed restriction is required.

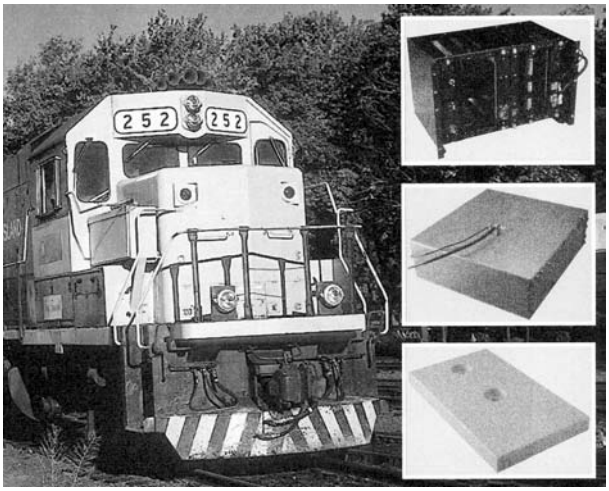

Advantages (cont'd)

- Transponder design:
  - High transponder data capacity (up to 180 bits)
  - Immune to environmental conditions (temperature extremes, precipitation, ambient light levels, dirt/debris)
  - Durable construction for wayside use
  - Requires no external power source

Design and Functional Features

Transponder

US&S i-Cab transponders are small, sealed, robust units programmed with data and mounted to the track tie. These units are simple and inexpensive to install and maintain. As the i-Cab -equipped train passes over a transponder, the on-board antenna emits a signal that powers the transponder, triggering an RF transmission containing the programmed data. This data is fed to the i-Cab on-board processor to handle a variety of vital tasks, such as comparison of the train's speed against the allowable speed.

Transponders can be used as part of a passive or a dynamic installation. In basic, passive applications, the transponders require no data connections to existing wayside signaling systems. In dynamic applications, transponders are interfaced to the wayside signaling system to provide data on signal aspects, track conditions, etc.

UNION SWITCH & SIGNAL

i-Cab™ Intermittent Cab Signaling System
General Information

RSE-2B2
Rev. 7-03

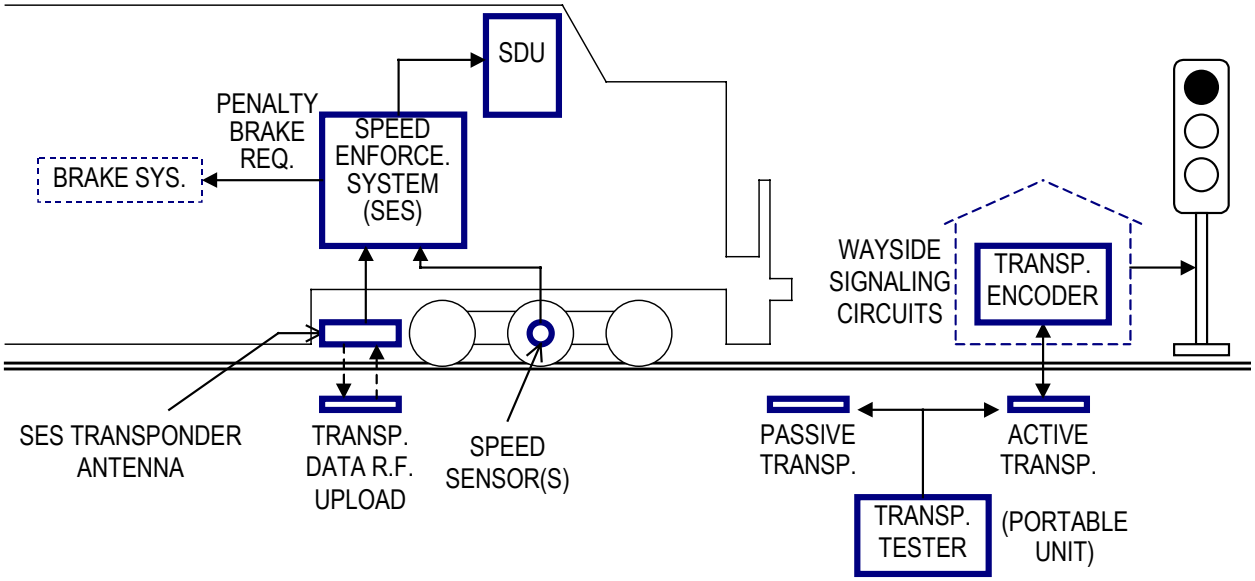

Design and Functional Features (cont'd)

Typical Transponder messages or "telegrams" can include:

- Limit of Authority information:
  - Aspect;
  - Signal type;
  - Track gradient;
  - Distance to increase point;
  - Target speed;
  - Target signal type;
  - Distance to target;
  - Route
- Speed control for movement in/out of sidings;
- Permanent and temporary civil speed restrictions;
- ID of Transponder-installed areas;

On-Board Processor

The i-cab on-board subsystem performs a variety of vital functions. This subsystem is controlled by a compact but powerful microprocessor-based unit whose primary functions are to:

- Compare the train's speed against the limits imposed by the most recent transponder;
- Calculate a nominal braking profile to bring the train's speed down to the new limit;
- Display the braking target speed to the operator;
- Monitor compliance with the braking profile;
- Request braking command if profile is not followed.

In the typical i-cab on-board configuration, the processor triggers an audible alarm to warn the operator on entering a speed-restriction zone and when operator-controlled braking should start. Simultaneously, a braking target speed is displayed for the operator, along with the current speed. If the operator responds as required by the i-cab system, no safety actions are taken by the processor. If braking is not initiated, the processor automatically requests penalty braking, via an independent braking system valve, to stop the train. No operator action taken after the penalty braking point can affect enforcement, and the normal operation of the braking system will bring the train to a full stop.

Data Management

Cab signaling using i-cab offers a significant advantage over other automatic train protection technologies in its ability to manage data. Transponders can be precisely programmed with the characteristics of a speed-enforcement zone to optimize braking for both the type of train and the type of wayside. In more comprehensive applications, transponders are interfaced to the signaling system to provide information regarding signal aspects, track conditions and other factors that impact train operation.

i-Cab™ Intermittent Cab Signaling System
General Information

UNION SWITCH & SIGNAL

Data Management (cont'd)

The vitality of the transponder reading process is assured by uploading the distance to the next transponder. Each transponder is programmed to provide data on the distance to the next transponder's location, ensuring transponders are in place. If the on-board processor does not detect the next trans-ponder (based on its distance computations), it is programmed to invoke a speed restriction until the next transponder is detected.

Application

US&S' i-Cab can be used in any type of rail territory, including unsignaled territory, and can provide speed-enforcement protection for almost every operating situation and infrastructure. The i-Cab system is modular in nature, easily upgradable, and can be used to provide a foundation for a communications-based signaling system. The i-Cab system can be programmed to apply a wide range of speed restrictions in any given block and provides the advantage of ensuring accurate speed supervision without unnecessarily restricting traffic.

Portable i-Cab transponders can provide speed enforcement protection for track crews and any other locations where a temporary speed restriction is required, such as flooded areas, accident scenes or areas where the roadbed has deteriorated.

For active transponder installations, an i-Cab Encoder unit is provided to convert wayside circuit indications into updated transponder data.

System Implementation

The cost of implementing the i-Cab system compares favorably with the costs of implementing other technologies that provide the safety and performance enhancements railways are seeking, including Positive Train Separation (PTS) and Positive Train Control (PTC) technologies. The cost of the system's vital on-board equipment is significantly less than that required to implement vital PTC or non-vital PTS systems. Transponders add to the cost of the system, but those expenses are more than offset by the costs of the wayside equipment required by PTC systems or the data communications networks inherent in PTS technology.

Implementation of the i-Cab system can be accomplished with no interference to existing wayside signaling equipment. In most applications, i-Cab transponders require no data connections to existing wayside signals. At interlockings, an input via a wayside mounted encoder or the US&S MicroLok® II unit (see ***RSE-1A1***) is the only required interface.

The i-Cab system operates independently of any type of central office control or monitoring and requires no data radio communications network; however, it is upgradable to include PTS-type data communications technologies as they become more readily available.

Specifications and Ordering Information

- Contact your US&S Account Executive for i-Cab specifications and ordering information.
- Refer to ***RSE-2B3*** and ***2B4*** to order i-Cab major components.

Typical Civil Speed Limit Control

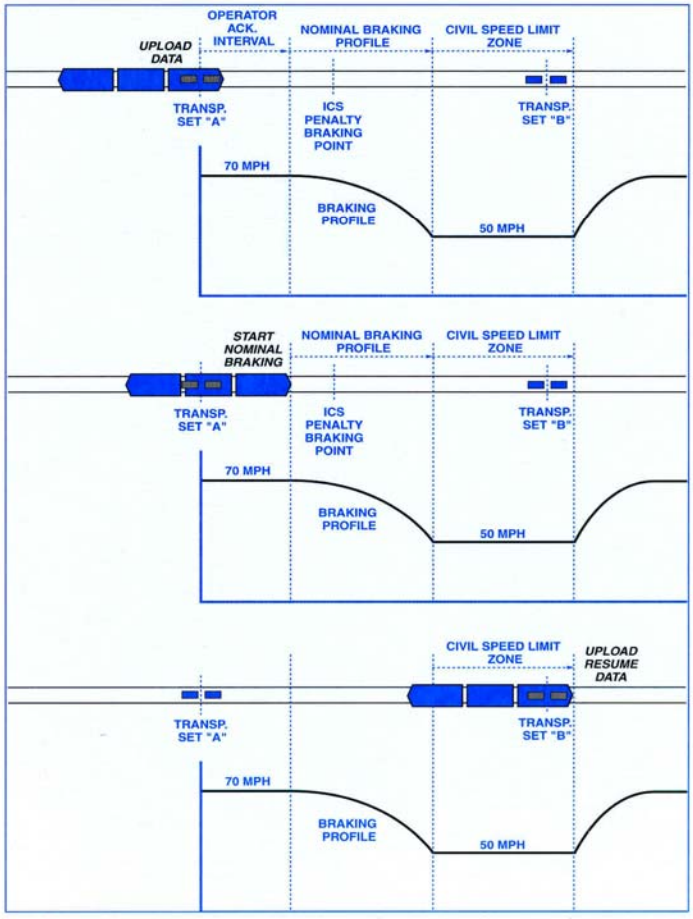

UNION SWITCH & SIGNAL

i-Cab™ Intermittent Cab Signaling System
General Information

RSE-2B2
Rev. 7-03

Typical Installations of Active and Passive Transponders

Typical Double Active Transponder Group

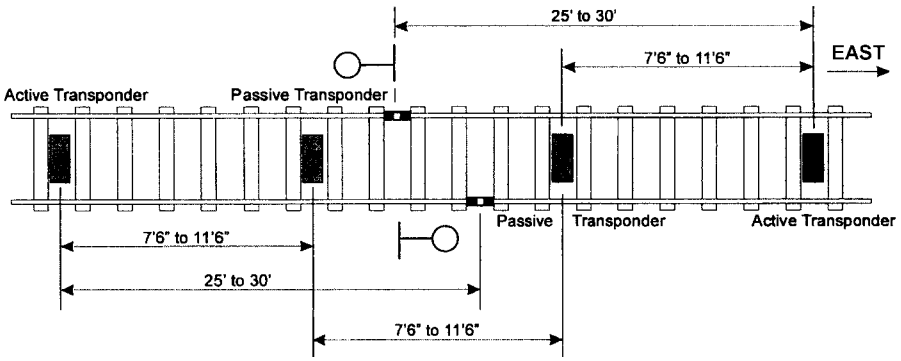

Typical Single Active Transponder Group

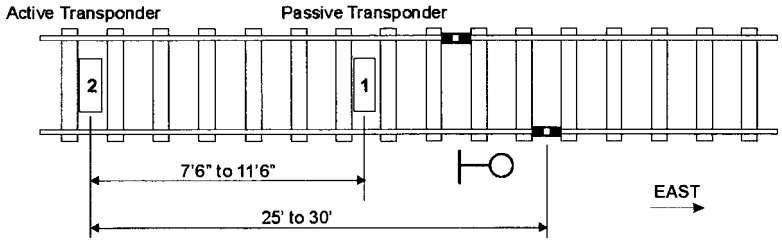

Typical Passive Transponder Group

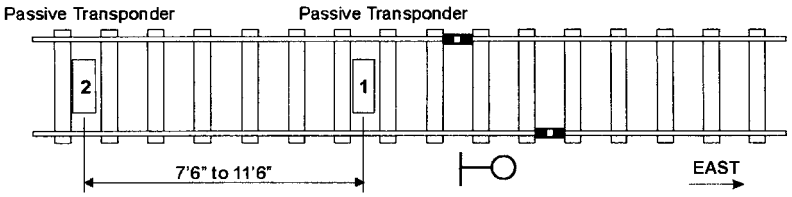

Typical Single Active and Double Passive Transponder Group

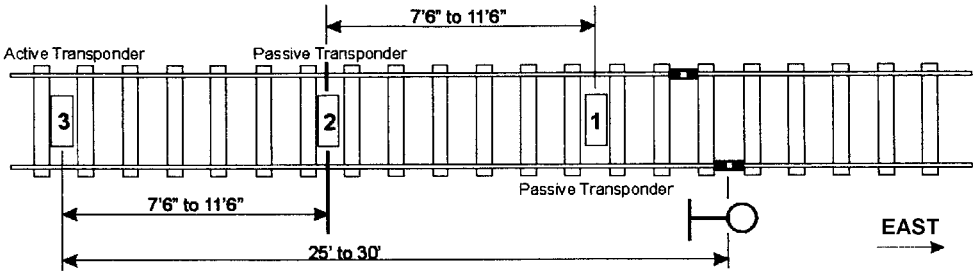

i-Cab™ is a trademark of Union Switch & Signal Inc.
MicroLok® II is a registered trademark of Union Switch Signal Inc.

Carborne and Integrated Carborne-Wayside Control Systems

UNION SWITCH & SIGNAL

RSE-2B3
Rev. 7-03

ASES® and i-Cab™ Systems Major Vehicle Components

The ASES and i-Cab product families are designed to allow simple, efficient and cost-effective implemen-tation of an integrated inter-mittent and continuous cab signaling system (ASES) or intermittent-only system (i-Cab) on any type of railroad or mass-transit vehicle. In the vehicle, supervisory electronics are housed in a single unit that can be configured to meet the customer's specific vehicle installation requirements. The ASES vehicle Speed Display Unit employs the latest in LCD-based flat-screen technology to display very detailed information.

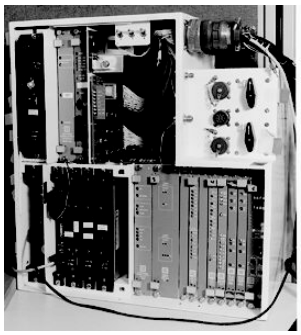

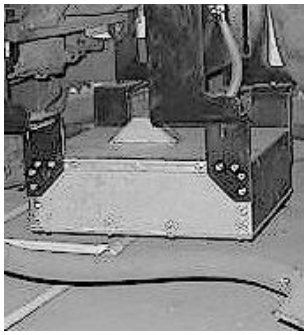

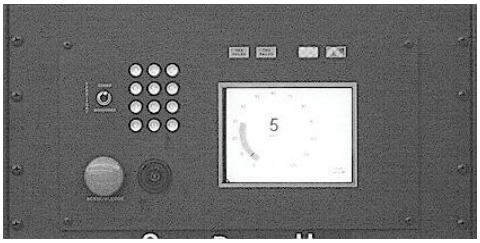

ASES System Enclosure (Typical Configuration)

The ASES system enclosure is a welded steel enclosure housing designed for the rugged vehicle environment, and can be mounted in the same locations on the car as any standard cab signal enclosure. Typical major components of the enclosure include:

- SES Cardfile (controlling electronics for intermittent subsystem):
  - Vital CPU PCB: SES functional logic;
  - Power Supply PCB: Power for SES electronics;
  - Comparator/Interface PCB: Serial communications interface (e.g. to CCS), control of transmitter signal to undercar antenna and initial check of data from wayside Transponders;
  - Locomotive Adapter PCB: Interfaces all the vehicle-specific I/O functions such as special tachometer and service brakes.
  - Transmission PCB: Provides the transmitting signal for undercar antenna, and receiver for data from Transponders;
- CCS Cardfile (controlling electronics for continuous cab signal system):
  - MicroCab® vital logic and interface PCBs to receive and process cab and speed signals, operate ADU and control vehicle brakes. Cardfile configuration determined by customer's application.
- Event Recorder
  - The FRA-compliant ASES Event Recorder (2-board cardfile) records indications from both the SES and CSS systems, and from various types of carborne peripheral equipment.
  - External data is interfaced to the recorder by a Data Acquisition Unit (DAU)
- SES Locomotive ID Plug - Stores the nominal wheel diameter, locomotive number and selected system parameters for the SES subsystem.
- CCS Decelerometer – Measures vehicle deceleration to confirm that the minimum braking rate is achieved (data processed by CCS vital CPU).
- Battery Conditioner PCB – Converts and regulates vehicle battery power for System Enclosure electronics;
- Relay PCB – Contains solid-state relays activated by cab-end selection (if required by application). Discrete LEDs show functions such as cab-end selected, Vzero, acknowledge switch pressed, etc.

UNION SWITCH & SIGNAL

RSE-2B3
Rev. 7-03

ASES® and i-Cab™ Systems
Major Vehicle Components

Typical ASES Vehicle Equipment Enclosure

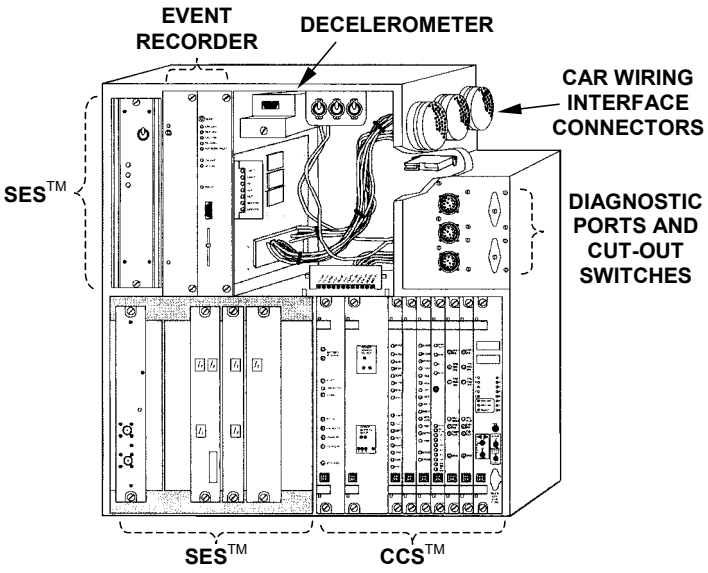

ASES/i-Cab Speed Display Unit

The ASES Speed Display Unit (SDU) employs the latest flat screen LCD technology to provide the vehicle operator a comprehensive but easily digested data from both the SES and CSS subsystems. Units are available for horizontal or vertical mounting with top, bottom or rear connection of the power and data cable. Indications are provided within the LCD screen as well as LED light bars, while switches and keypads are used for operator inputs. An audible alarm (Sonalert) is also provided. Some of the typical indications and controls on the ASES SDU include:

Indications	Controls
Authorized speed	Numeric keypad (for various operation codes)
Actual speed	Ack. restrictive command
Overspeed condition	Start Departure Test
Distance-to-target	SDU display brightness
Stop penalty in effect	Select CCS territory
Stop ack. and release	
SES and/or CCS territory	
Transp. reading faults	
SES/CSS Cut-Out Status	
Results of automatic diag.	
SES/CSS internal fault	
SES/CSS downgrade (audible)	
Failed Transp. (audible)	
Penalty & overspeed (audible)	

Speed Display Unit Front Panel Layouts

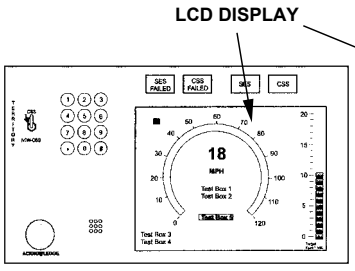

TYPICAL SDU HORIZONTAL DESIGN

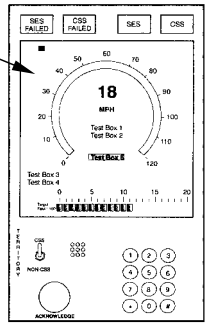

TYPICAL SDU VERTICAL DESIGN

ASES Data Acquisition Unit (DAU)

The DAU is part of the ASES Event Recorder Subsystem and provides a convenient and flexible point of interface for all vehicle external indications. Both analog and digital inputs are interfaced through this unit to the Event Recorder board (via an RS-422 serial link) inside the main ASES System Enclosure. The DAU consists of a stand-alone enclosure (typical: 6 x 18 x 13 inches) that is mounted in a vehicle electrical locker, and is LONWorks-compatible.

ASES® and i-Cab™ Systems
Major Vehicle Components

UNION SWITCH & SIGNAL

RSE-2B3
Rev. 7-03

ASES/i-Cab SES Antenna and Switch Box

The SES subsystem antenna provides the means of communicating with the track-mounted ASES Transponders. This fiberglass-encased unit both powers the Transponders using its 27 MHz output, and reads the data from the Transponders at a return frequency of 4.5 MHz. The antenna also includes a internal Supervision PCB to check that the antenna and transmission unit are working properly. Brackets are provided for undercar mounting on most any locomotive or transit car. Two coaxial cables connect the SES system Transmission Unit to the Antenna. These are connected through an antenna switch box located within several feet of the vehicle antenna to provide for easy replacement of the antenna, if required. The switch box also consolidates cable connections from two SES antennas on double-ended vehicles.

Antenna specifications are as follows:

Transmit Freq.:	27 MHz
Transp. Return Freq.:	4.5 MHz
Unit Dimensions:	21.5" x 19" x 7"
Rec. Signal Conn.:	RG400 cable (with TNC-type connectors)
Transmit Signal Conn.:	RG213 cable and N-type

SES Antenna

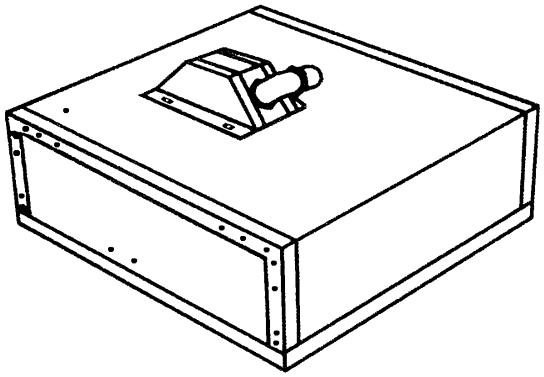

ASES CCS Track Receiver

The MicroCab Track Receiver coil is designed to detect the continuous, coded cab signal from the rails for processing by the CCS subsystem. This unit is mounted under the vehicle ahead of the lead truck. Refer to ***RSE-8B1*** for additional details on this unit.

ASES/i-Cab Speed Sensors

Vehicle speed data is delivered to the SES and CSS subsystems via a set of speed sensors. These are active speed sensors that produce a signal relative to speed by sensing the passage of gear teeth through an electrical field. For the ASES system, one bi-directional and one zero-speed sensor are used to provide train velocity and no-motion indications. See ***RSE-8C1*** for more information on the speed sensors.

i-Cab Vehicle Cardfile

All processing electronics for the i-Cab system are contained in a single rack-mountable cardfile which holds all logic and interfacing circuit boards (plug-in type). This unit is designed to endure the rugged vehicle environ-ment and utilizes front-mounted plug for easy connection of all power and signal data wiring.

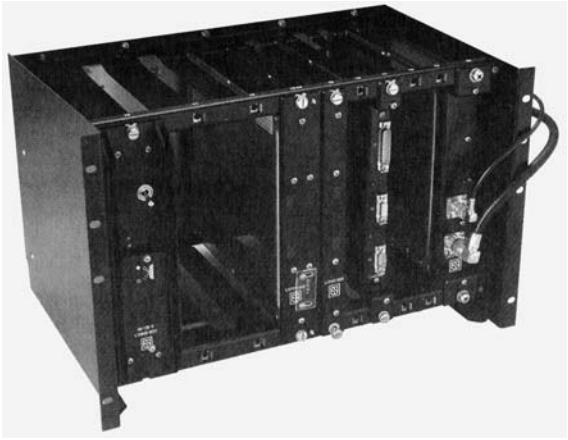

Ordering and Additional Information

- Refer to tabulations for ordering information on vehicle components of the ASES and i-Cab subsystems.
- ASES MicroCab CCS components shown for reference only. Component selection will vary with customer applications.
- For additional information on ASES and i-Cab components, contact your US&S Account Executive.

UNION SWITCH & SIGNAL

RSE-2B3
Rev. 7-03

ASES® and i-Cab™ Systems
Major Vehicle Components

	ASES Intermittent PCBs and Related	
US&S Order No.	Description	Notes
L121000001	Vital CPU PCB	--
L320540000	Transmission Unit PCB	--
L121010001	Comparator PCB	--
L121040002	Locomotive Adapter Unit PCB	--
L121400000	Power Supply PCB	--
L121103000	Vehicle ID Plug	(1)
	Note (1): Programming customized per user's vehicles.	

	ASES Continuous Cab PCBs and Related	
US&S Order No.	Description	Notes
N17061308	68332 CPU PCB	--
J7031050107	PCMCIA Flash Memory Card	(1)
N21266405	250 Hz Filter/Demodulator PCB	(2)
N21266404	100 Hz Filter/Demodulator PCB	(2)
N4519105504	Decoder CPU PCB	--
N21260109	Vital Input PCB	--
N21268201	Multi-Function PCB	--
N4519100803	Conditional Power Supply (CPS) PCB	--
N4519105103	Power Supply PCB	--
N4518116603	Blank Cardfile Shield Panel	(3)
	Note (1): Plugs into 68322 CPU PCB Note (2): Versions available per different cab carriers. Note (3): Quantity as req'd to fill open cardfile spaces	

	ASES Event Recorder PCBs
US&S Order No.	
N17061306	Recorder PCB
N26561102	Recorder Power Supply PCB

	ASES: Additional Enclosure Components	
US&S Order No.	Description	Notes
N4519066704	Decelerometer	(1)
N21045001	Relay PCB	--
N26501000	Battery Conditioner PCB	(2)
	Note (1): Versions available per veh. mtg. orientations. Note (2): Versions available for veh. power specs.	

	ASES Data Acquisition Unit (DAU) and PCBs
US&S Order No.	
N26404302	DAU Unit with PCBs
N26501201	Serial Gateway/Device Manager PCB
N26502001	Interface PCB
N26501901	Analog Input PCB

Ordering information continued on page 5.

ASES® and i-Cab™ Systems
Major Vehicle Components

UNION SWITCH & SIGNAL

RSE-2B3
Rev. 7-03

	ASES and i-Cab Speed Display Unit (SDU)
US&S Order No.	
N26403501	Speed Display Unit - Horizontal Design
N26403401	Speed Display Unit - Vertical w/top-mount connector
N26403402	Speed Display Unit - Vertical w/bottom-mount conn.

	ASES/i-Cab: Additional SES Vehicle Components
US&S Order No.	
L320430010	SES Antenna
L320720000	SES Antenna Connector Box
J7091461295	SES TNC Connector (Antenna Cable - Rec'd Signal)
J7091461349	SES "N" Connector (Antenna Cable - Transmit Signal)
A0458490315	SES Antenna Cable (Type RG213)

	ASES: Additional Cab Signal Vehicle Components
US&S Order No.	
N437200	CSS Track Receiver - Left
N437200001	CSS Track Receiver - Right
N437201	CSS Antenna Cover – Top
N437202	CSS Antenna Cover – Bottom
M199455	CSS Antenna Bracket
N285017	CSS Antenna Junction Box
N4511257005	Dual-Axle Generator
N26409101	Junction Box (Dual-Axle Generator)

	ASES/i-Cab: Additional Vehicle Components
US&S Order No.	
X26408502	Brake Pressure Transducer Assembly
J7258570004	Solenoid, Brake Valve
J7381040007	Speed Sensor - Bi-Directional
J7381040006	Speed Sensor - Zero Speed

	i-Cab Vehicle Components: Cardfile and PCBs	
US&S Order No.	Description	Notes
--	Cardfile	(1)
L121000001	Vital CPU PCB	--
L320540000	Transmission Unit PCB	--
L121010001	Comparator PCB	--
L121040002	Locomotive Adapter Unit PCB	--
L121400000	Power Supply PCB	--
L121103000	Vehicle ID Plug	(2)
	Note (1): Contact US&S for ordering information. Note (2): Programming customized per user's vehicles.	

UNION SWITCH & SIGNAL

Carborne and Integrated Carborne-Wayside Control Systems

UNION SWITCH & SIGNAL

RSE-2B4
Rev. 7-03

ASES® and i-Cab™ Systems Major Wayside Components

Wayside elements of the ASES and i-Cab systems (Transponder and Encoder) are easy to install, program and interface to signaling circuits. In particular, the ASES/i-Cab Transponder carries a wide spectrum of speed enforcement-related data in a small, highly durable unit that is virtually impervious to environmental disturbances.

Transponder

The track-mounted ASES/ i-Cab Transponder carries the essential wayside information for uploading to the ASES-equipped vehicles. This unit is fastened on the ties between the rails so that it can properly receive the 27 MHz triggering signal from the vehicle-mounted ASES/i-Cab antenna, and in turn, transmit a 4.5 MHz data-bearing signal back to the antenna. The Transponder contains memory designed to store programmed data and emit that data when activated by the passing train's triggering signal. The ASES/i-Cab Transponders are configurable for both "Passive" and "Dynamic" modes. The "Dynamic" mode is encoded with variable data by an associated wayside Encoder Unit. A "linking" process is used between several Transponders to help the on-board ASES/ i-Cab system identify missing or damaged units.

Transponder Design

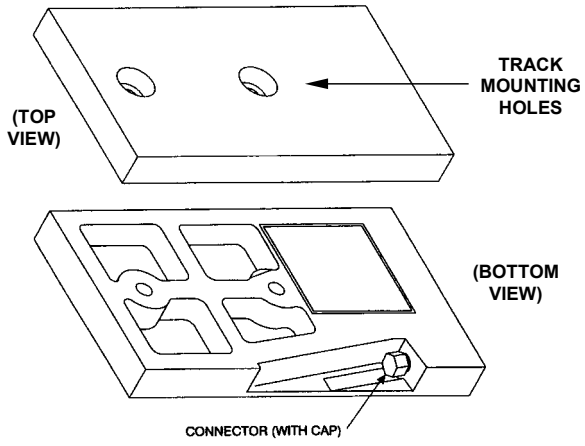

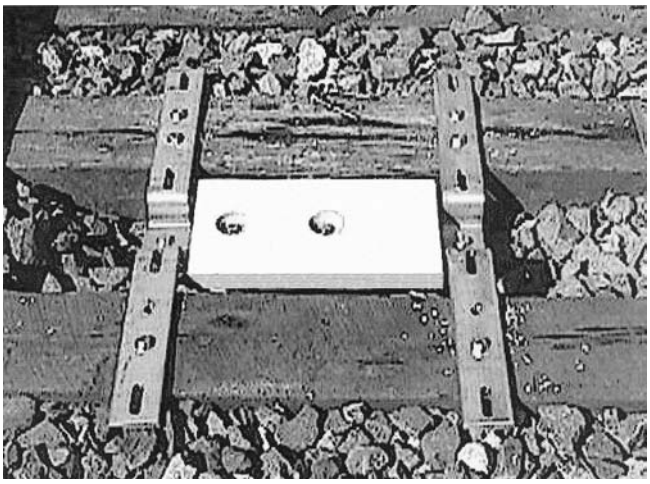

Typical Transponder Wood Tie Installation

The Transponder is an extremely durable and rigid, sealed unit incorporating two mounting bolt holes and a cable connector for inputting data. Communications between the Transponder and the vehicle antenna are unaffected by other RF signals, electrical fields, moisture, dust or temperature extremes.

Transponder specifications are as follows:

Unit Dimensions:	16.8" x 9.9" x 1.6"
Unit Weight:	12 lbs. 13 oz.
Cable connection:	Amphenol 162-5035-1210N
Mounting options:	Wood or concrete tie (via mounting plate; see ordering tab.)

Transponder Encoder

The ASES/ i-Cab Transponder Encoder provides the interface between the wayside signaling system and the "Active" type of Transponder. The Encoder monitors the wayside signal aspect. As aspect changes are received, corresponding telegram messages in the Encoder are triggered and transmitted to the Transponder. To avoid mixed telegrams during transition periods, a priority circuit in the Encoder is used to suppress less restrictive telegrams so long as more restrictive telegrams are active.

UNION SWITCH & SIGNAL

RSE-2B4
Rev. 7-03

ASES® and i-Cab™ Systems
Major Wayside Components

Transponder Encoder (cont'd)

Two versions of the ASES/ i-Cab Transponder Encoder are available. The 2-board version is designed to send one of two telegrams to a Transponder for each Transponder. The 4-board version is designed to send one of eight telegrams for each Transponder. External connections include discrete-wire terminal blocks for the cable to the Transponder and wayside signal circuits, and serial link ports for computer programming of telegram data.

Encoder specifications are as follows:

Unit Dimen.:	2-board model: 4.5" x 6.0" x 5.4"
	4-board model: 4.5" x 6.0" x 9.0"
Installation:	Wayside equipment house or case
Input Sigs.:	Active: 12 Vac (10 to 24 Vac, 48 to 62 Hz)
	12 to 24 Vdc (10 to 34 Vdc)
	Inactive: <6 Vac, 50 to 60 Hz or <6 Vdc
Output Sigs.:	AMI-coded telegram, amplitude = 12 V
Power:	12 Vac (10 to 24 Vac, 48 to 62 Hz)
	12 to 24 Vdc (10 to 34 Vdc)
Temp. Range:	-40°F to +158°F (-40°C to +70°C)

Transponder Tester/Programmer

This portable unit performs a variety of services for the ASES/ i-Cab Transponder including reading of encoded telegram data, checking for a failed Transponder and programming (downloading) of telegram data in conjunction with a laptop PC.

Two cable connectors are provided on the control panel for simultaneous connection to the Transponder and PC. User controls/indicators include an LCD alphanumeric display and pushbuttons for basic set-up of the Tester/Programmer. Procedures are displayed on the attached PC which is programmed with the Windows®-based "TelProg" software.

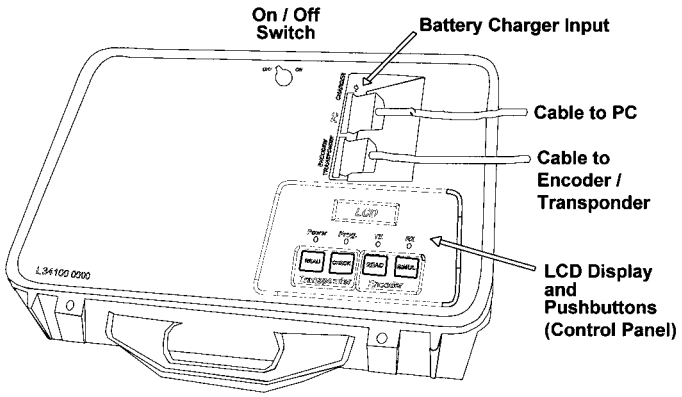

Transponder Encoder

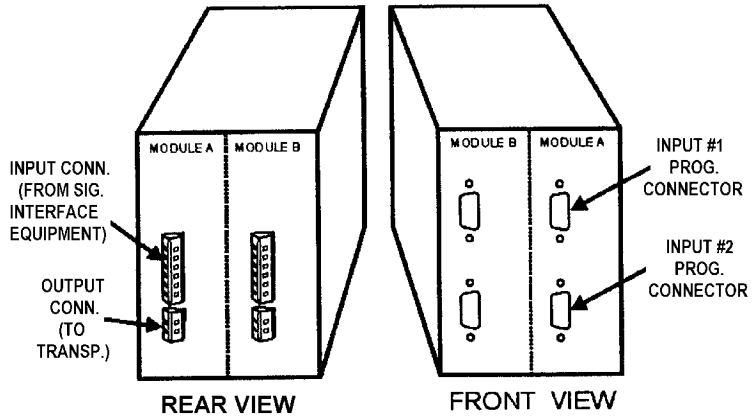

ASES® and i-Cab™ Systems
Major Wayside Components

UNION SWITCH & SIGNAL

Transponder Tester/Programmer (cont'd)

The Tester/Programmer is powered by a rechargeable battery and contains a standard jack for connection of a recharging line.

Unit Dimen: 18" x 15" x 7"

Unit Weight: 12 lbs.

Power: 1.2 Ah 12V sealed lead-acid battery

Typical Transponder Wood Tie Installation

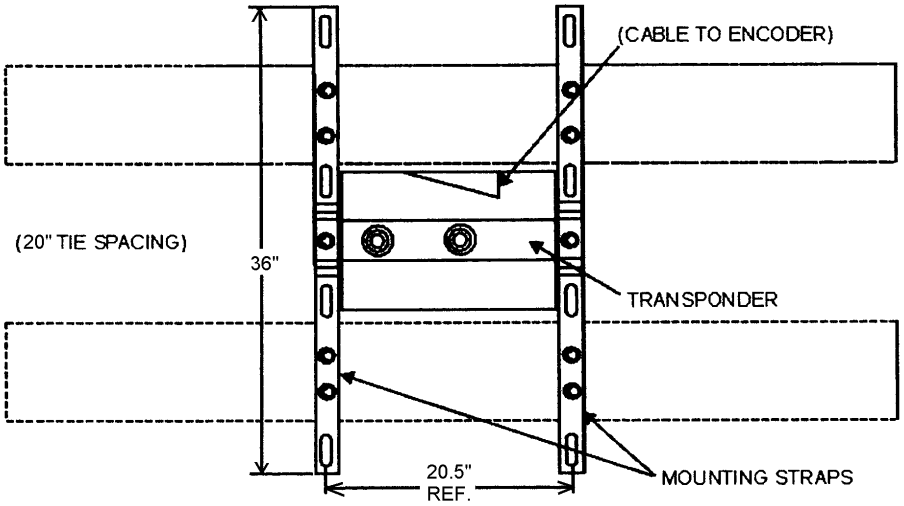

Typical Transponder Concrete Tie Installation

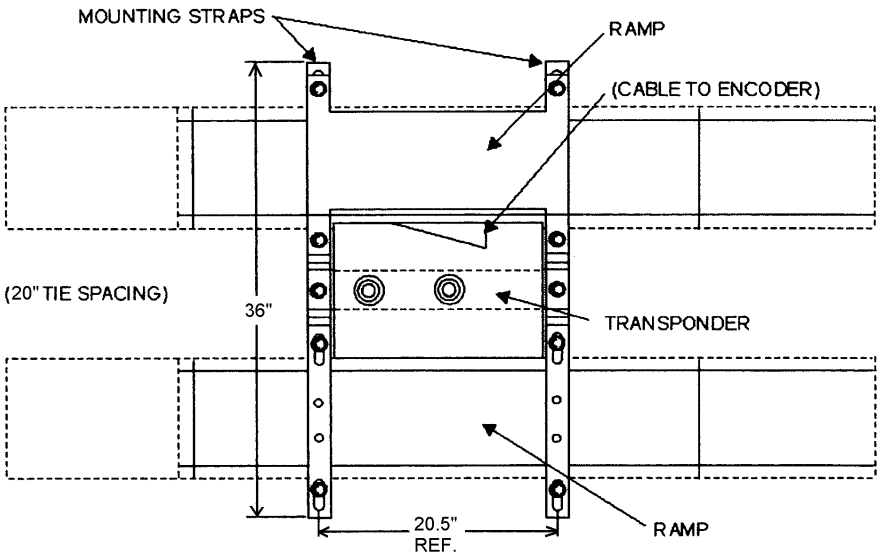

UNION SWITCH & SIGNAL

RSE-2B4
Rev. 7-03

ASES® and i-Cab™ Systems
Major Wayside Components

Ordering Information

- Refer to tabulations for ordering information on wayside components of the ASES and i-Cab subsystems.
- For additional information on ASES and i-Cab components, contact your US&S Account Executive.

	ASES and i-Cab: Transponder/Mounting	
US&S Order No.		Notes
L340000000	Track-Mounted Transponder	(1)
M51802302	Mounting Plate	--
M51802301	Wood Tie Mounting Strap	(2)
M51802305	Concrete Tie Mounting Bolt Hooks	(3)
M51802306	Spacer	(4)
L340009560	Cable Connector Wrench	--
A0458490314	Cable, Transponder-to-Encoder	(5)
	Note (1): Same unit for passive or active applications. Note (2): Two required per transponder. Note (3): Used with mtg Plate and mtg Straps Note (4): Inserted between plate and straps in concrete tie installations. Note (5): Without connectors; length per installation req.	

	Transponder Tester and Cables
US&S Order No.	
L341000000	Portable Transponder Tester Box
L341004008	Cable, Tester-to-Transponder
L341004014	Cable, Tester-to-PC, Null-Modem type
L341004006	Cable, Tester-to-Encoder Cable (at transponder)
L341004007	Cable, Tester-to-Encoder (direct)

	Transponder Encoders		
US&S Order No.	Type (1)	Dimensions	PCBs
L324120010	"Small"	4.5" x 6.0" x 5.4"	2
L324120010	"Large"	4.5" x 6.0" x 9.0"	4
	Note (1): As req'd for different numbers/arrangements of signal heads		

ASES® is a registered trademark of Union Switch & Signal Inc. i-Cab™ is a trademark of Union Switch & Signal Inc.

Carborne and Integrated Carborne-Wayside Control Systems

UNION SWITCH & SIGNAL

RSE-2C1
Rev. 7-03

Digitrac® Train Location System

Determining the position of a moving train is one of the primary characteristics of safe and efficient train control. As the demands for higher speed, efficiency and safety increase, more precise methods of determining a train's position will be required. To meet these demands Union Switch & Signal offers a precise, cost-effective means of determining the position of a moving train relative to a fixed wayside point.

General Description

The US&S Digitrac Train Location System can function as a stand-alone means of determining a train's position, or it can be integrated with other technology, such as Remote Control Locomotive (RCL) systems and a global positioning satellite (GPS) system, in an overall positive train control (PTC)/positive train separation (PTS) package. Fully compliant with ATCS specification 335, the Digitrac Train Location System can be readily integrated with on-board processing equipment, recording, or display devices.

The Digitrac system consists of three basic components:

- On-board antenna;
- Wayside Transponder
- On-board Reader.

Antenna:

Mounted underneath the locomotive, the antenna emits a low power un-modulated 200 kHz signal that energizes the Transponder as the locomotive passes over it. Mounted on the track between the rails and hermetically sealed, the Transponder is programmed with a unique location-specific 10-digit code.

Transponder:

When energized, the Transponder transmits this code via a 27 MHz modulated signal to the on-board antenna. This signal is demodulated in the Reader and checked for integrity. Data protection is provided by BCH error check coding that protects against erroneous number acceptance.

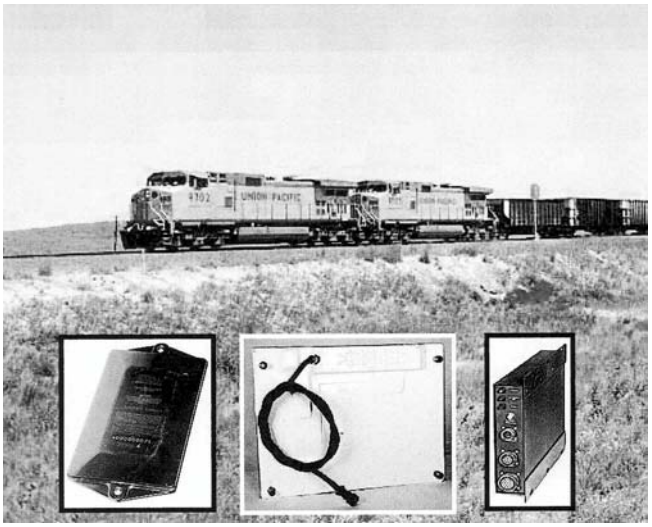

Reader:

The Digitrac Reader provides all system processing and control functions: generation of the RF signal emitted by the antenna, validation and decoding of the Transponder signal, and output of Transponder data to other on-board systems or to a diagnostic computer.

Advantages

- Reliable, secure data transfer at vehicle speeds up to 100 mph.
- Transponder-to-antenna data transfer withstands variations of temperature, ambient light, vibration, ice, snow, dirt or non-metallic debris.
- Zero cross talk between operating Transponder and antenna Reader of locomotive on an adjacent track.
- Fully compliant with ATCS Specification 335.
- FCC-approved for unlicensed RF operation.
- Zero wrong numbers reported in 2.25 million readings.
- 99.98% system readability rate established during testing.

UNION SWITCH & SIGNAL

Digitrac® Train Location System

RSE-2C1
Rev. 7-03

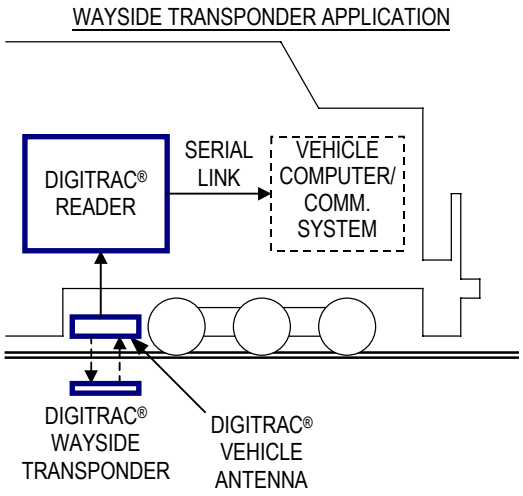

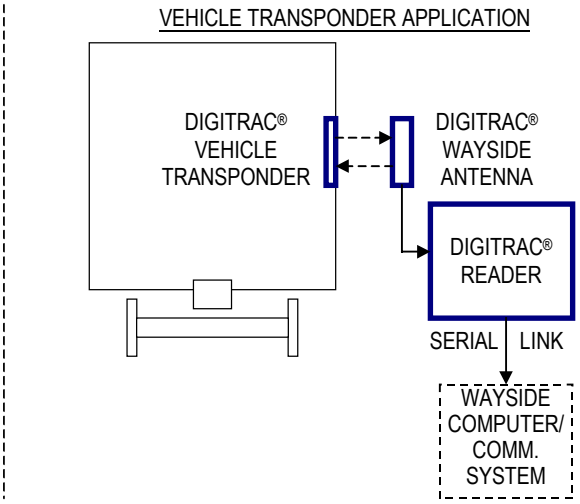

Applications

The Digitrac system is designed for applications requiring the transmission of location-specific wayside data to a passing train. Such applications include vehicle location, station identification, RCL pullback protection, speed control, route selection and electronic sentry. By locating a moving train relative to a fixed wayside point, the system can be used for speed control by providing indications to a processor when the train passes successive points of known separation. The system can be used for route control (as part of a radio-linked CTC system) to confirm that a train has taken the requested route.

Major Components

Transponder

The Digitrac Transponder is a compact, hermetically sealed unit that transmits digital data only when inductively energized. It contains no internal battery or power source. This unit is normally mounted on the ties between the rails at points where location is required. The Transponder is factory programmed with a 10-digit numeric code that is a part of each data message transmitted to the Antenna unit. Future Transponders will feature field-program-mability. Transponder mounting options include between ties with a mounting plate, buried slightly in the ballast and directly to a single tie (within a notch).

Transponder Specifications

Dimensions:	12.8”L x 0.7”H x 6.2”W
Weight:	1.0 lb.
Input Power:	Inductive-couple from antenna

Transponder Specifications (cont’d)

Spacing to Antenna:	13” (33 cm) nominal
Data Transmission:	Low-power HF near-field propagation.(per FCC, Part 15)
RF Carrier Freq.:	27.255 MHz nominal
RF Amplitude Mod.:	Range: 60% nominal
Data Rate:	50 Kbaud (nom.)
Data Selection:	Fixed, factory-encoded (field-programmable by 12/03)
Temperature Range:	Operating: -40°C to +70°C
Storage:	-55°C to +85°C
Vibration Limit:	5-10 Hz: 7.6 mm P-P, 10-500 Hz: ±1.5g peak
Shock Limit:	20g peak, 11 ms

Transponder

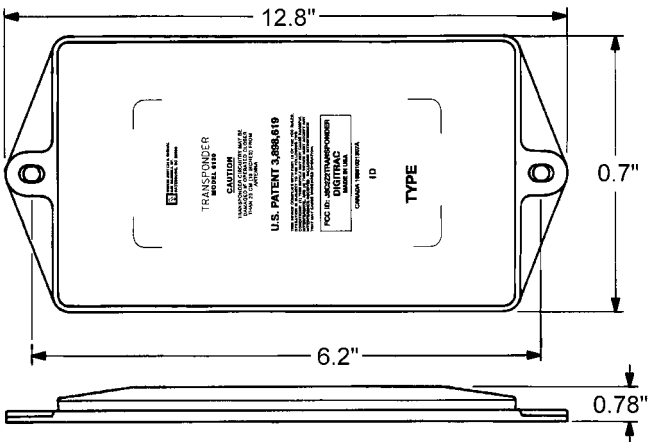

Digitrac® Train Location System

UNION SWITCH & SIGNAL

RSE-2C1
Rev. 7-03

Major Components (cont'd)

Antenna

The Digitrac Antenna is a rugged, hermetically sealed unit that is normally mounted beneath the locomotive. It continuously generates and broadcasts a low-power electromagnetic field at a nominal 200 KHz. When a Transponder enters this field, its circuitry is briefly powered on and it transmits a modulated 27 MHz signal . This signal is picked up by the receiving antenna portion of the Digitrac Antenna and is passed to the Reader.

The antenna is normally mounted ahead of the lead axle of the locomotive or transit car. The antenna's principle plane is parallel to the transponder's plane and to the ground.

Antenna Specifications

Unit Dimen.:	24.5"L x 2.5"H x 19.5"W
Unit Weight:	20 lbs.
Input Power:	55 Vdc (min., from Reader), 85 Vdc (max., from Reader)
Power Freq.:	Range: 190 - 210 kHz; 200 kHz nom.
Environment:	Same as Transponder

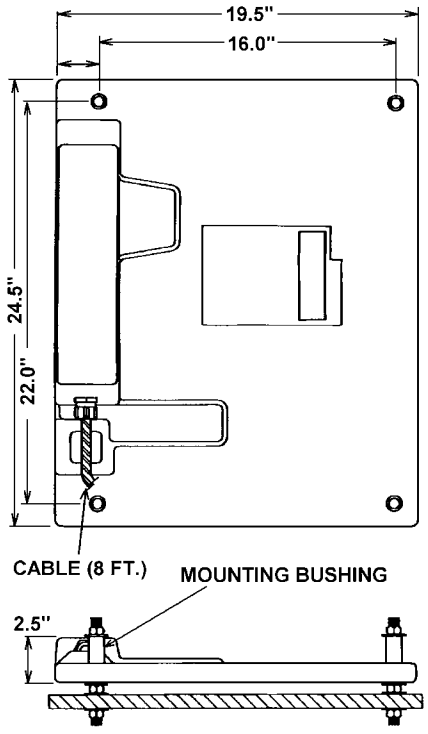

Reader

The Reader is a rugged microprocessor-based unit that typically mounts inside the locomotive or transit car cab. It connects to the Antenna unit via a cable terminated with a circular connector. The Reader connects directly to the locomotive DC supply, provides complete protection against input transients, and in turn supplies power to the Antenna unit via the interconnecting cable. The received Transponder data signal is demodulated in the Reader and checked for integrity. Data protection is provided by powerful BCH error check coding, which virtually eliminates erroneous number acceptance. After data verification, the validated Transponder number is transmitted via the Reader's communication connector as an asynchronous serial ASCII message.

User interfaces on the Digitrac Reader include three status indicator lamps, a circuit breaker button, a power connector, an antenna connector and a communications connector.

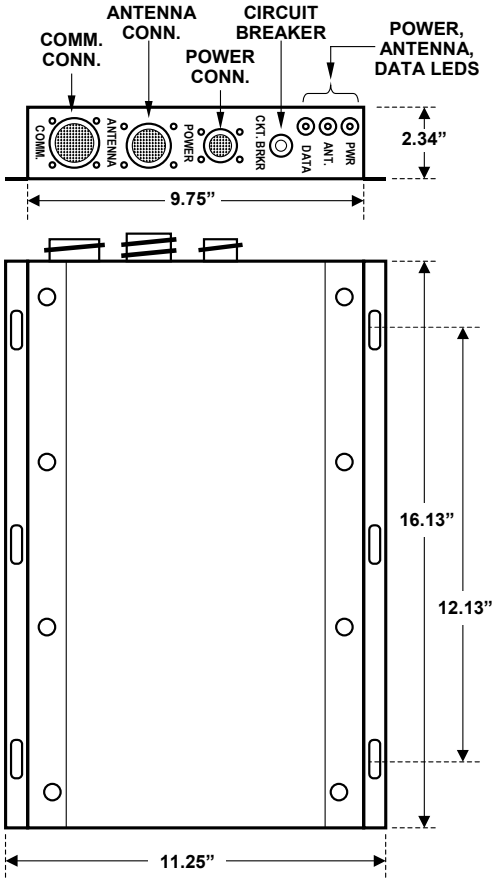

UNION SWITCH & SIGNAL

Digitrac® Train Location System

RSE-2C1
Rev. 7-03

Major Components (cont'd)

Reader Specifications

Unit Dimensions: 11.5"L x 9.5"H x 2.5"W

Unit Weight: 7 lbs.

Input Power: 55-85 Vdc

Input Current: 0.5A max.

Serial Comm.: EIA RS-232C or RS-422

Data Baud Rates: .Jumper: 2400, 4800, 9600 BPS

Environment: Temperature, vibration, shock: Same as Transponder

Ordering Information

- Refer to tabulations for ordering information on Digitrac components.
- Contact your US&S Account Executive or Request US&S Service Manual SM-7020A for additional information on the Digitrac system.

	Digitrac Main Assemblies
US&S Order No.	
N21022501	Reader
031-0110-00	Antenna
031-0012-00	Transponder

	Digitrac Cables and Connectors
US&S Order No.	
170-0005-00	Antenna Ext. Cable - 20 ft., with 2 mating connectors
N4518831401	Reader Power Cable - 10 ft. (for 72 Vdc)
310-2008-00	Reader Power Mating Connector
310-2027-00	Reader Serial Communications Mating Connector
310-2022-00	Reader Antenna Mating Connector

Carborne and Integrated Carborne-Wayside Control Systems

UNION SWITCH & SIGNAL

RSE-2D1
Rev. 7-03

Digitair® End-of-Train System General Information

US&S' Digitair® End-of-Train (EOT) systems offer a full selection of EOT products. These systems may be configured in many ways, from basic to advanced systems that can supply crew members with a variety of EOT indications including brake pipe pressure and last car motion and direction. The system also provides the capability to initiate an emergency brake application from the rear of the train.

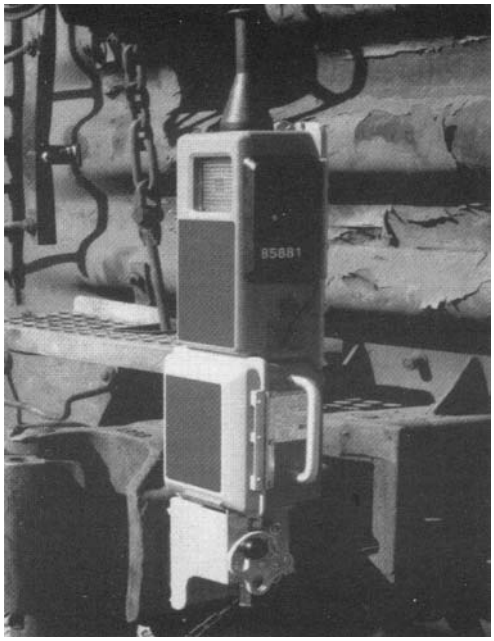

General Description

All Digitair EOT units are built to endure long term use in rugged railroad environments. EOT units are designed to make installation, replacement and servicing quick and simple procedures. The battery powered Digitair EOT device use a minimum amount of dc power, which helps maximize battery replacement cycles. The Digitair product line is maintained with PC-based diagnostic software, and battery chargers and analyzers. The complete product line includes:

- Model 6699-CC Sense and Brake Unit (SBU): The Digitair SBU transmits essential end-of-train to the locomotive cab mounted Communication Display Unit (CDU) or the integrated-cab Communication Interface Unit (CIU and receives commands (such as emergency brake air dump) from the CDU. Refer to ***RSE-2D2*** for additional information.
- Model 6696 CDU: The Digitair Communications Display Unit shows the locomotive engineer the various types of data transmitted by the 6699 SBU (brake pipe pressure, last-car motion, etc.), and also allows the engineer to initiate the emergency brake application command to the SBU. Refer to ***RSE-2D3*** for additional information.
- Model 6680 CIU: The Digitair Communications Interface Unit (CIU) is designed specifically for integrated cab locomotive systems employing AREMA-specified communications guidelines and protocols. Refer to ***RSE-2D4*** for additional information.
- Model 6689 Repeater (NEMA Type): This Digitair repeater is placed on the wayside to help relay SBU/CDU radio communications in areas where such signals may compromised by terrain or surrounding objects such as cars in a classification yard. Refer to ***RSE-2D5*** for additional information.
- Model 6680 Repeater (CIU Type): This train-mounted Digitair repeater performs the same functions as the 6689 Repeater, but in accordance with AREMA-specified communications guidelines and protocols. Refer to ***RSE-2D6*** for additional information.
- Model 6635 Battery Charger/Analyzer: The Digitair charger unit provides a convenient means of charging and reconditioning the NiCad batteries used in the 6699-CC SBU. Refer to ***RSE-2D7*** for additional information.
- Ni-Cad Rechargeable Battery: This latest improvement in Ni-Cad battery technology provides a higher capacity and longer service life than previous EOT batteries. Refer to ***RSE-2D8*** for additional information.

UNION SWITCH & SIGNAL

RSE-2D1
Rev. 7-03

Digitair® End-of-Train System General Information

Digitair End-of-Train System General Applications

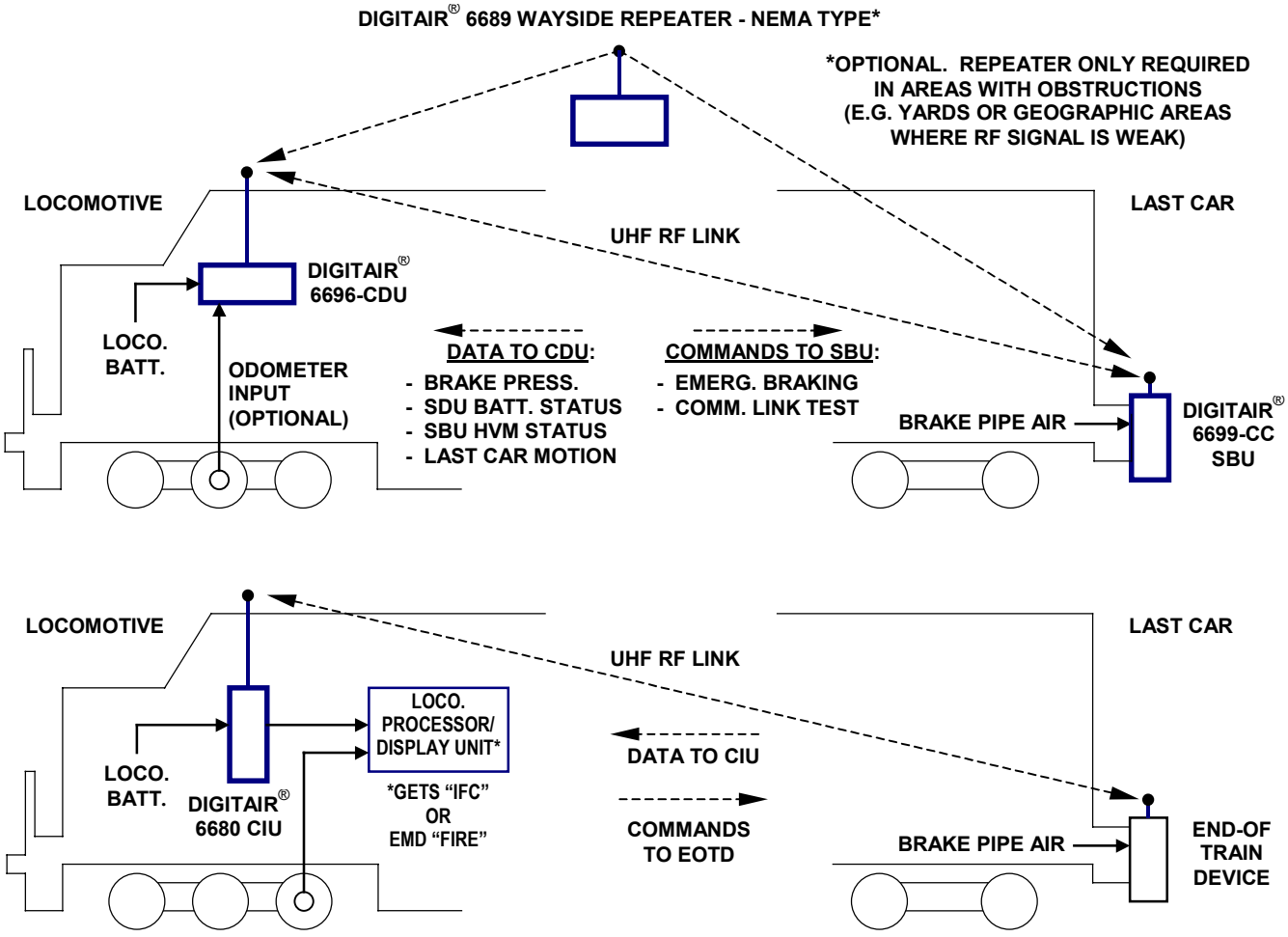

Ordering Information

Refer to these RSE Catalog sections for ordering information on individual Digitair system components:

- Model 6699-CC: ***RSE-2D2***
- Model 6696 CDU: ***RSE-2D3***
- Model 6680 CIU: ***RSE-2D4***
- Model 6689 Repeater (NEMA Type): ***RSE-2D5***
- Model 6680 Repeater (CIU Type): ***RSE-2D6***
- Model 6635 Battery Charger/Analyzer: ***RSE-2D7***
- Ni-Cad Rechargeable Battery: ***RSE-2D8***

Digitair® is a registered trademark of Union Switch & Signal Inc.

Carborne and Integrated Carborne-Wayside Control Systems

UNION SWITCH & SIGNAL

RSE-2D2
Rev. 7-03

Digitair® End-of-Train System Model 6699-CC Sense and Brake Unit (SBU)

The key to 2-way telemetry, Union Switch & Signal's Digitair Model 6699-CC End-of-Train Sense & Brake Unit (SBU) transmits essential data over FCC-approved frequencies to and from the locomotive cab. The SBU's case is made from a new improved , high-strength composite material that is highly resistant to physical abuse. The NEMA-4 rated electronics enclosure is water-resistant and features a Condensation & Corrosion Control System.



General Description

The Digitair SBU monitors brake pipe pressure and the direction and motion of the last car of the train, and continuously transmits this information to the locomotive operator. It also communicates self-diagnostic data on the SBU's battery condition and the integrity of the unit's RF communications link.

All Model 6699-CC SBUs are equipped to enable an emergency brake application from the last car of the train. Each SBU also features an FRA-compliant, ultra-brilliant High Visibility Marker light to warn following train crews within an extended range.

The Model 6699-CC SBU is fully compatible with AAR protocol standards for EOT systems, and allows operation with one or two-way cab devices. Data is transmitted over FCC-approved frequencies, with unique ID codes and an "arming" feature for security.

Advantages

- Enables emergency brake application from the last car of the train.
- Supports one-way or two-way communications.
- Superior RF technology based on modular, synthesized transceiver.
- PC serial port for diagnostics, configuration and calibration.
- Modular design makes maintenance fast and easy.
- Rugged, lightweight composite case is highly resistant to abuse.

Advantages (cont'd)

- Meets AAR protocol standards for EOT systems.
- Water- and weather-resistant.
- Condensation & Corrosion Control System.
- Ergonomic construction for handling ease.
- Hardened steel 3-finger clamp design makes installation easy.
- Integral FRA-compliant LED-matrix HVM with 1/4-inch Lexan® lens.
- New high-capacity battery - up to two 5.5-amp-hour Ni-Cad battery packs.
- Compatible with either Ni-Cad or sealed lead acid standard and high-capacity EOT batteries.
- Supports "arming" security feature
- Houses optional AEI tag
- Optional dual-pressure monitoring capability

UNION SWITCH & SIGNAL

RSE-2D2
Rev. 7-03

Digitair® End-of-Train System
Model 6699-CC Sense and Brake Unit

Application

The Digitair Model 6699-CC SBU features a lightweight composite case for ease in handling and installation. A compact but rugged 3-finger clamp at the base of the case allows quick and secure mounting, and a locking mechanism assures security. Once mounted, the unit is designed to be clear of any potential damage from angle cocks or helper train activities.

The Model 6699-CC SBU is designed to be clamped to the coupler of the last car of a train, with its brake pipe sensing hose attached to the brake pipe's gladhand. The unit is mounted by inserting the three-finger clamp into the front two coupler "core" holes and tightening the crank handle until the unit is firmly secure.

After closing the angle cock on the last train car, connection to the train's brake pipe is accomplished by way of the SBU's brake line sensing hose gladhand. Once connected, the last car angle cock is opened, allowing the SBU to sense brake pipe pressure. On dual-pressure SBUs, a second gladhand/hose enables monitoring of another air pressure source.

The SBU features a conveniently placed service door to provide access to the unit's battery compartment and an RS-232 serial data port for diagnostics, configuration and calibration using a standard PC. Built-in tests and diagnostics can be activated using the SBU's external test button.

Specifications

Physical:	Dimensions: 32-3/8"H x 8-1/4"W x 5-3/8"D.
	Weight: 23 lbs. (without batteries).
Environmental:	Operating Temp. Range: -40°C to +70°C.
	Storage Temp. Range: -40°C to +70°C.
	Humidity: 95% non-condensing at 40°C/96-hour exposure.
RF Freq.:	Typical domestic service: SBU Transmit Frequency: 457.9375 MHz.
	SBU Receive Frequency: 452.9375 MHz.
Brake-Line Pressure:	Nom. Operating Range: 0 to 125 psig (measurable).
Marker Light:	1.0-second flash rate.
	FAA-compliant luminosity.
Battery Life:	160 hours average (w/ two (2) battery packs).
PC Interface:	9-pin D-connector, PC-compatible, RS-232.

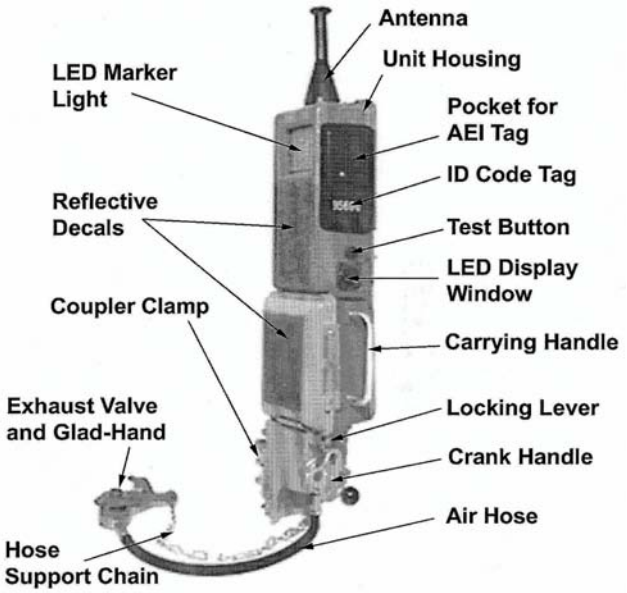

Digitair® End-of-Train System
Model 6699-CC Sense and Brake Unit

UNION SWITCH & SIGNAL

Ordering Information

- Refer to tabulation below for Model 6699-CC SBU ordering information.
- Request US&S Service Manual 7075 for Model 6699-CC components.

	Digitiar SBU Units
US&S Order No.	
N26604200 N26604300	6699-CC Sense & Brake Unit with lead-acid battery. 6699-CC Sense & Brake Unit with NiCad battery.

	Misc. Equipment
US&S Order No.	
X26600001 N4512321264	6695/6695-CC to 6699-CC Upgrade Kit Diagnostic Data Disk (3.5" diskette)

Digitair® is a registered trademark of Union Switch & Signal Inc.

UNION SWITCH & SIGNAL

Carborne and Integrated Carborne-Wayside Control Systems

UNION SWITCH & SIGNAL

RSE-2D3
Rev. 7-03

Digitair® End-of-Train System Model 6696 Communications Display Unit (CDU)

The Digitair Model 6696 CDU is a compact locomotive control stand-mounted unit providing all the necessary logic and controls for one or two-way communication with End-of- Train (EOT) units. The CDU Model 6696 meets or exceeds the AAR guidelines for End-of- Train Telemetry.



General Description

The Model 6696 features a 32-character alphanumeric display for clear, concise end-of-train and wayside communications. The CDU receives and displays data from 1-way EOTs. In the 2-way mode, it receives and displays data and transmits an emergency brake application to the two-way equipped EOT unit at the rear of the train when necessary.

Operating controls are located on the front panel and are ergonomically arranged for ease of use by the locomotive operator. A group of nine illuminated push buttons is used to provide various menu-driven functions. An audio enunciator is provided to give the operator an audible alert when a significant event occurs.

The CDU continuously displays the current brake-pipe pressure at the end of the train along with the ID number of the EOT attached to the coupler of the last car. The CDU also displays data relative to train movement and diagnostics related to the EOT unit.

The CDU is equipped with an RS-232 serial port for laptop diagnostics and customer configurable applications. The CDU also employs Flash memory for ease in dealing with optional software updates.

Advantages

- Last car brake-pipe pressure
- Last car status relative to: Stop, Forward, Reverse or moving
- Status of EOT telemetry and battery
- Emergency activation of brakes from rear of train
- Odometer for last car point clearance

Advantages (cont'd)

- Odometer for speed and acceleration
- Input train length for odometer functions
- Status of the High Visibility Marker Light
- RS-232 serial port for diagnostics
- RS-232 serial port for Datalogger and Event recorder functions
- Optional Arming feature for two-way security.

Application

When installed in the cab of the locomotive, the Digitair Model 6696 CDU monitors and controls the operation of the EOT Sense and Brake Unit (SBU) or other EOT device. With the CDU, the operator can initiate an emergency brake application from the rear of the train by activating a safety switch distinctively labeled "EMERGENCY" located on the CDU. In accordance with AREMA guidelines, the CDU supports a security "Arming" function to ensure that only authorized commands for rear Emergency brake applications are accepted.

The CDU's menu of functions allows the operator to set the ID number of the SBU or other attached EOT unit along with selecting display brightness, enunciator volume and many other user definable functions. With the Model 6696 CDU, the operator can view the battery condition, the marker light status, train movement and the communication status, which are constantly monitored and displayed.

UNION SWITCH & SIGNAL

RSE-2D3
Rev. 7-03

Digitair® End-of-Train System
Model 6696
Communications Display Unit (CDU)

Application (cont'd)

The unit's laptop accessible diagnostic capability allows maintenance personnel to configure and troubleshoot with ease. The Model 6696 CDU can be customized to deal with any type of installation. The rear connector panel can be customized to fit many existing plug connector arrangements making retrofit situations simple and cost effective.

Specifications

Unit Dimensions:	10.75"W x 4.25" H x 8.25"D
Weight:	9 lbs.
Mounting Options:	Mounting tray: 1/4" machine screw holes or AREMA clean cab enclosure
Operating Power:	Typical: 72V locomotive battery 58V (min.), 72V (nom.), 86V (max.)
Current:	0.35A (min.), 1.5A (max.)

Specifications (cont'd)

Option:	Power: 13.6V, 13.6V (min./nom.), 14.3V (max.) Current: 4A (max.)
Required Antenna:	¼ Wave, whip or low profile type
Temp. Range:	0°C to +60°C
Radio Transmitter:	Range: 450-470 MHz (UHF)
Power Options:	2W, 4W, or 8W (transmit)
Transmitter:	452.9375 MHz (typical)
Receiver:	457.9375 MHz (typical)
Datalogger Port:	Level EIA RS-232C
Odometer Interface:	Compatible with axle generator: 20 PPR or 60 PPR
Wheel Dia. Calibration:	34" (min.), 40" (norm./default), 46" (max.)

Model 6696 CDU Front Control Panel

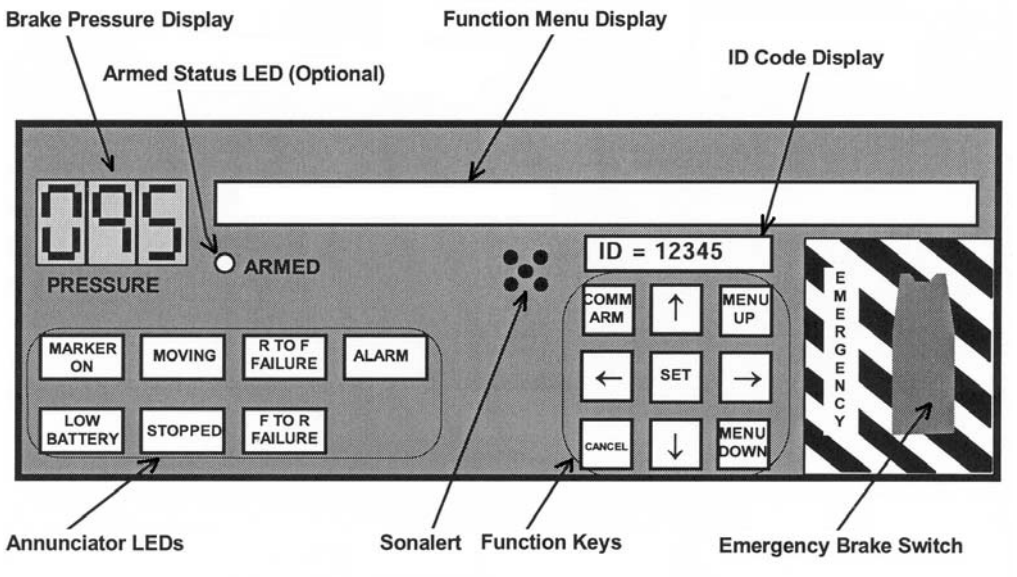

Digitair® End-of-Train System
Model 6696
Communications Display Unit (CDU)

UNION SWITCH & SIGNAL

Ordering Information

- Refer to tabulations below for Model 6696 CDU ordering information.
- Request US&S Service Manual 7063 for Model 6696 CDU components.

	Digitair CDU Units
US&S Order No.	
N24301301	Clean Cab Communications Display Unit
N24301302	Control Stand (Mounting Tray) Comm. Display Unit

	Installation Kits and Parts, Software
US&S Order No.	
116-5016-00	Clean Cab CDU Installation Kit
X4516469801	Control Stand (Mounting Tray) CDU Installation Kit
150-0128-00	Mounting Tray
N4518051201	Odometer Cable
N4518830401	Power Cable w/bayonnet connector, 72 Vdc
N4518831401	Power Cable w/bayonnet connector, 12 Vdc
472-0017-00	Antenna
170-0842-00	Antenna Cable Kit
N4512321264	Diagnostic Data Disk (3.5" diskette)

Digitair® is a registered trademark of Union Switch & Signal Inc.

UNION SWITCH & SIGNAL

Carborne and Integrated Carborne-Wayside Control Systems

UNION SWITCH & SIGNAL

RSE-2D4
Rev. 7-03

Digitair® End-of-Train System Model 6680 Communications Interface Unit (CIU)

The Digitair Model 6680 Communication Interface Unit (CIU) is a compact, plug-in, locomotive-mounted unit designed specifically for integrated-cab locomotives. The Model 6680 CIU performs all of the necessary logic for two-way communications with any end-of-train device (EOTD) employing AREMA-specified guidelines and protocols, and facilitates the display of EOTD information through the locomotive's on-board computer. The CIU meets or exceeds all AREMA guidelines for end-of-train telemetry.



General Description

The Model 6680 CIU is designed to plug into the electrical locker of any locomotive equipped with an integrated on-board computer utilizing any of the following protocols: LSI, ICE, FIRE or IFC. The Model 6680 CIU transmits and receives data to and from the EOTD and relays the data via a serial link to the locomotive's core processor. The locomotive core processor then displays the EOT information on standardized display screens in the cab.

The primary function of the CIU is to monitor EOT brake-pipe pressure continuously and provide the ability to vent the brake pipe through the EOTD attached to the last car of the train. Other ancillary functions of the CIU include receiving and transmitting data relative to the motion and direction of the last car of the train, as well as the status of the marker light, telemetry battery and emergency-brake solenoid.

Advantages

- Monitors last-car brake-pipe pressure.
- Facilitates emergency activation of brakes from the rear of the train.
- Monitors last-car status relative to stop, forward and reverse motion.
- Monitors status of EOT telemetry and battery.
- Monitors status of high-visibility marker light.
- Facilitates display of EOT data on standardized display screens in the locomotive cab.

Advantages (cont'd)

- RS-232 port for simple diagnostics.
- Flash memory for ease with software upgrades.
- Rugged unit meets or exceeds locomotive manufacturers' environmental standards.
- Meets or exceeds all AREMA guidelines for EOT telemetry.
- Compatible with on-board computers utilizing LSI, ICE, FIRE or IFC protocols.
- Front-mounted flashing green LED to signify proper operation

Application

When installed in the electrical locker of the locomotive, the Digitair Model 6680 CIU monitors and controls the operation of the EOTD. With the CIU, the operator can initiate an emergency brake application from the rear of the train by activating an emergency switch typically located on the console of the locomotive.

The CIU also can automatically initiate an emergency brake application from the EOTD anytime it's requested from the locomotive controls, such as the brake handle or sand switch, when the electrical locker receptacle is appropriately wired. The Model 6680 CIU also supports a security "arming" function to ensure that only authorized commands to the EOTD for emergency brake application are accepted.

UNION SWITCH & SIGNAL

RSE-2D4
Rev. 7-03

Digitair® End-of-Train System Model 6680 Communications Interface Unit

Application (cont'd)

The unit's RS-232 diagnostic port allows maintenance personnel to configure and troubleshoot with ease through the use of a laptop computer and the CIU's extensive diagnostic screens and menus.

Specifications

Physical:	Dimensions: 9.25"H x 2.55"W x 11.5"D.
Weight:	7 lbs. 1 oz.
Mounting Options:	LSI HOTD rack mount or pocket mount.
Environmental:	Operating Temperature Range: -40°C to +70°C
Power Supply:	Operating Power: Typical: 15 Vdc clean power.
	Minimum: 12 Vdc, Maximum: 18 Vdc.
Power Options:	2W, 4W and 2/4W.

Specifications (cont'd)

Radio Transmitter:	Range: 450-470 MHz (UHF).
	Transmit Frequency: 452.9375 MHz (typical)
	Receive Frequency: 457.9375 MHz (typical)
	Antenna Connector: UHF N type.
	Required Antenna: 1/4 wave, whip or low-profile type.
I/O Connections:	Diagnostics Port: Level EIA RS-232C.
	Host Communications Port: Isolated, Level EIA RS-232C.

Ordering Information

- Refer to tabulation for Model 6680 CIU ordering information.
- Request US&S Service Manual SM-7072 for detailed Model 6680 information.

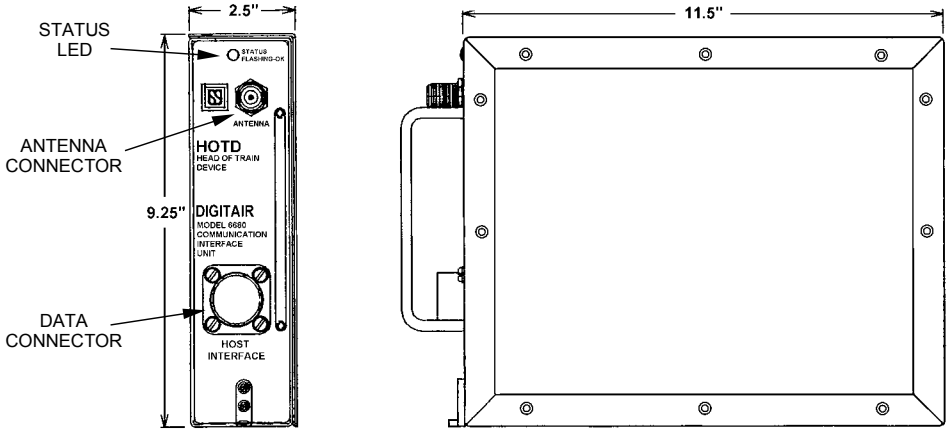

	Digitair CIU
US&S Order No.	
N24300102	Model 6680 Comm. Interface Unit

	Software Disks
US&S Order No.	
N4512320822	CIU Executable Software & Load Utility Disk (3.5" disk)
N4512321264	Diagnostic Data Disk (3.5" diskette)

Digitair® is a registered trademark of Union Switch & Signal Inc.

Carborne and Integrated Carborne-Wayside Control Systems

UNION SWITCH & SIGNAL

RSE-2D5
Rev. 7-03

Digitair® End-of-Train System Model 6689 Repeater (NEMA Type)

Two-way End-Of- Train (EOT) systems have improved the safety and efficiency of mainline railroad operations. However, EOT communication may be compromised or interrupted under certain conditions. Union Switch & Signal has developed the Digitair Model 6689 Repeater to solve this problem.

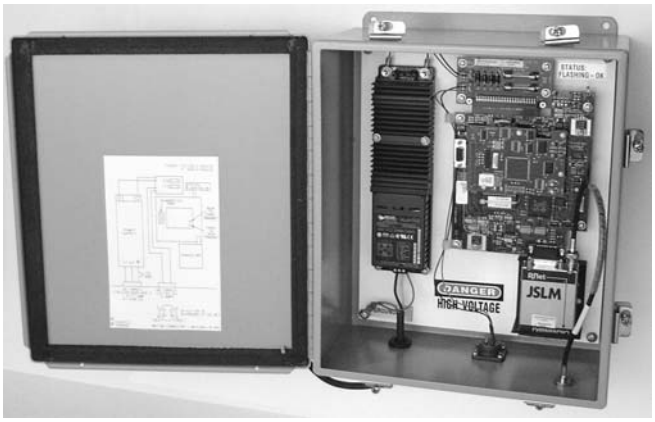

General Description

The Digitair Model 6689 EOT Repeater relays EOT messages between the front and rear of a train. It is used in areas where the RF signal may be weakened or interrupted by terrain along a train's route or in a classification yard where the last car may be "boxed-in" with other trains in the yard making it difficult to "arm" the EOT system prior to departure.

The Model 6689 EOT Repeater is housed in a single weatherproof NEMA 4 enclosure that includes a power supply, a processor board, and a radio transceiver.

The Repeater is compatible with all EOT equipment using existing protocols, such as the AREMA EOT message protocol; and it meets or exceeds the guidelines of AREMA, FRA, FCC and Industry Canada (IC) regulations.

Advantages

- Compatible with all EOT systems adhering to AREMA EOT message protocols.
- Built-in diagnostics.
- 110/220 Vac and/or 12 Vdc with auto fail-over.
- 2 watt or 4 watt operation.
- Eliminates "ping-pong" effect (multiple repeats).
- Up to 4-ID codes can be "masked" for yard use.
- "FLASH memory" allows software upgrades from a laptop computer.
- Can be programmed to eliminate up to four identification codes.

Application

The Digitair Model 6689 EOT Repeater is installed where EOT communication is difficult. The unit can be powered from a standard ac source or from an external dc source, such as dc power supply or a battery, either of which can serve as a power back-up. The Repeater is also available without a power supply for applications that will only use an external dc source. An "N" type RF antenna connector is mounted on the Repeater's front panel to facilitate connection of a 1/4 wave antenna.

The Model 6689 EOT Repeater does not require a dedicated external device for system diagnostics or configuration. All diagnostic tests and configuration functions are included on a diagnostics software disk. This disk runs on a DOS-compatible personal computer that plugs into the Repeater's internal 08-9 style diagnostic port.

A FLASH type programmable non-volatile memory chip stores the Repeater's application software. This eliminates the need to disassemble the unit and physically replace an EPROM if software upgrades are issued. A repeater executable software disk allows the user to download software upgrades into the repeater's internal FLASH memory from a personal computer.

UNION SWITCH & SIGNAL

RSE-2D5
Rev. 7-03

Digitair® End-of-Train System
Model 6689 Repeater (NEMA Type)

Specifications

Physical:	Dimensions: 15.38"H x 12.94"W x 6.25"D.
Weight:	23.5 lbs.
Environmental:	Operating temperature range: -40°C to + 70°C.
	Storage temperature range: -55°C to + 100°C.
	Humidity: 95% non-condensing.
Power Requirements:	AC power (automatic 110/220 Vac detection):
	100-120 Vac @ 1.4 amps; 200-240 Vac @ 0.7 Amps; 47-440 Hz.
	DC power (nominal): 12-15 Vdc @ 2 Amps.
Radio Transceiver:	Frequency (front-to-rear messages): 452.9375 MHz.
	Frequency (rear-to-front messages): 457.9375 MHz.
	Transmission power: 2 Watts (standard); 4 Watts (requires 15 Vdc power source).
	Transmission frequency stability: 5 ppm.

Radio Transceiver (cont'd):	
	Emission: 16KOF2D.
	Deviation (@1200 Hz): 3.3 KHz.
	Receiving sensitivity (-12dB SINAD): 0.45uV (max).
	Receiving frequency stability: 10ppm (max).
	Selectivity: 60 dB (min).
	Intermodulation immunity: 60 dB (min).
	Spurious rejection: 55 dB (min).
	Image rejection: 50 dB (min).
PC Diag. Interface:	Asynchronous serial data rate: 9600 baud, 1 stop bit, 8 data bits.
	Voltage level: EIA RS-232C.

Ordering Information

- Refer to tabulation for Model 6689 Repeater ordering information.
- Request US&S Service Manual SM-7070 for Model 6689 components.

	Digitair Repeaters (NEMA Type)
US&S Order No.	
N24307201	Model 6689 Repeater - AC/DC
N24307201	Model 6689 Repeater - DC only

	Misc. Equipment
US&S Order No.	
X24300014	DC Power Connector Kit
N4512321264	Diagnostic Data Disk (3.5" diskette)

Digitair® is a registered trademark of Union Switch & Signal Inc.

Carborne and Integrated Carborne-Wayside Control Systems

UNION SWITCH & SIGNAL

RSE-2D6
Rev. 7-03

Digitair® End-of-Train System Model 6680 Repeater (CIU Type)

The Digitair Model 6680 CIU Repeater helps ensure complete and correct communications between EOT front and rear systems in areas where these communications may be compromised by natural and man-made obstructions. This particular Digitair Repeater is designed to operate as an Head-of-Train Device (HOTD) Communication Interface Unit (CIU) and is packaged in an LSI-compliant HOTD CIU enclosure suitable for locomotive or wayside installation.



General Description

The Digitair 6680 CIU Repeater relays EOT telemetry messages from the rear of the train to the front of the train and vice versa (i.e., from EOT End Unit to EOT Cab Unit, and vice versa). This unit is typically used in areas where radio signals are weak due to surrounding terrain conditions or where there exists RF "dead" spots such as in many train yards. As such, the Repeater is installed in a strategic location where it will provide maximum radio coverage in the working area.

The Model 6680 Repeater is compatible with all EOT equipment employing existing protocols such as the AREMA EOT message protocol. It meets or exceeds the AREMA guidelines, as well as FRA, FCC and Industry Canada (IC) regulations.

The Repeater is housed in a single "Communication Interface Unit (CIU)"-type enclosure, and is powered from an external DC power source via a power cable that plugs into its front panel-mounted Host Interface connector. Connection to a UHF 1/4-wave antenna is accomplished via the Repeater's front panel mounted "N"-type RF antenna connector.

The Digitair 6680 CIU Repeater hardware is designed using the latest in microcontroller technology, making it an "intelligent" device capable of performing several powerful functions in addition to its main function of relaying EOT messages. These are configurable via a serial connection from the Repeater to a standard PC.

Advantages

- Built-in diagnostics;
- Selection of normal 2-Watts transmission or high-power 4-Watts transmission (as required);
- Ability to repeat only normal EOT messages or, by configuration, to repeat special messages types used for other applications;Can be programmed to NOT repeat (i.e., block out) up to 4 EOT ID Codes. This helps reduce radio traffic in yards where EOT beacons or test EOTs have been installed;
- Functions can be enabled to prevent multiple repeats of the same EOT message when two or more Repeaters are operating within telemetry range of each other (i.e. "ping-pong" prevention).

Software Features

All Digitair 6680 CIU Repeater diagnostic tests and configuration functions are included on a Diagnostics Software Disk that runs on a standard DOS-compatible personal computer (PC; plugs into the Repeater's internal DB-9 style Diagnostic Port). The Diagnostic Software permits easy customization of the Repeater's operation. Most variable default values and functions are user-selectable, set by the factory at purchase time, or set by railway technicians via a personal computer.

UNION SWITCH & SIGNAL

RSE-2D6
Rev. 7-03

Digitair® End-of-Train System
Model 6680 Repeater (CIU Type)

Software Features (cont'd)

The 6680 Repeater uses a FLASH-type programmable, non-volatile memory chip to store its application software. This eliminates the need to disassemble the unit and physically replace an EPROM (memory chip) in the event that software upgrades are issued. The unit's Executable Software disk allows the user to download software upgrades, when issued, into the Repeater's internal FLASH memory.

Application

The Model 6680 Repeater enclosure is designed to operate as an Head-of-Train Device (HOTD) Communication Interface Unit (CIU) and is packaged in an LSI-compliant HOTD CIU enclosure. The HOTD CIU operates as an EOT Front End Unit and can be rack-mounted in a locomotive that is equipped with an Integrated Cab.

For wayside installations, the 6680 Repeater is typically in a wayside hut or bungalow equipment rack.

Specifications

Physical:	Overall Dimensions: 9.25" H x 2.50" W x 11.60"D
	Weight: 4 lbs.
Environmental:	Operating Temperature Range: -30°C to +50°C
	Storage Temperature Range: -55°C to 100°C
	Humidity: 95% non-condensing at 40°C, 96-hour exposure
Power Req.:	DC Power: 12 Vdc to 15 Vdc @ 2A
Radio Comm.:	Front-to-Rear Messages: 452.9375 MHz (typical)
	Rear-to-Front Messages: 457.9375 MHz (typical
Radio Comm.:	Transmit Power: 2-Watts (standard) or 4-Watts (requires 15 Vdc)
	Transmit Frequency Stability: 5 PPM
	Emission: 16K0F2D
	Deviation (at 1200 Hz): 3.3 KHz
	Receive Sensitivity (-12 dB SINAD): 0.45 uV (max)
	Receive Frequency Stability: 10 PPM (max)
	Selectivity: 60 dB (min)
	Intermodulation Immunity: 60 dB (min)
	Spurious Rejection: 55 dB (min)
	Image Rejection: 50 dB (min)
PC Diag. Interface:	Asynchronous Serial Data Rate: 9600 Baud, 1 Stop Bit, 8 Data Bits
	Voltage Level: EIA RS-232C

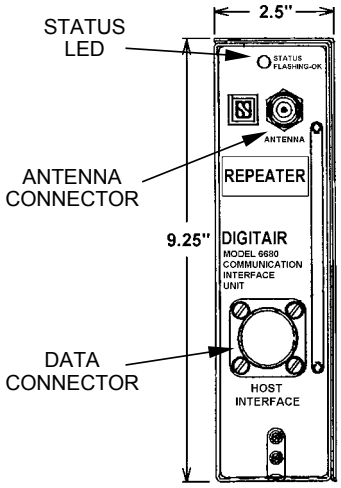

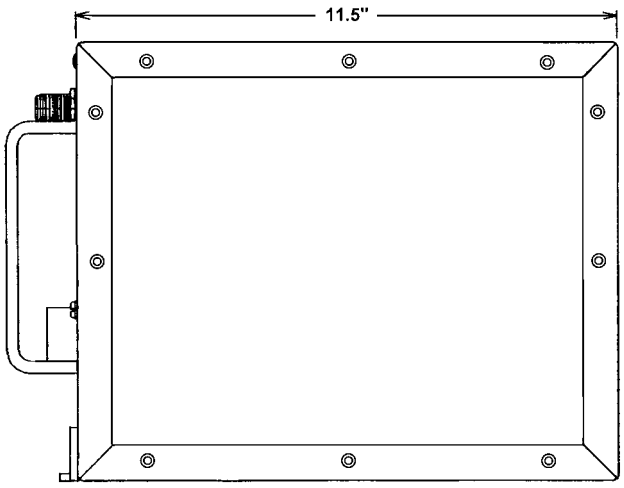

Digitair® End-of-Train System
Model 6680 Repeater (CIU Type)

UNION SWITCH & SIGNAL

Ordering Information

- Refer to tabulation for Model 6680 CIU Repeater ordering information.
- Request US&S Service Manual SM-7068 for detailed Model 6680 CIU Repeater information.

	Digitair Repeater (CIU Type)
US&S Order No.	
N24300101	Model 6680 Repeater (CIU Type)

	Misc. Equipment
N24306001	Power Cable only
N4512321264	Diagnostic Data Disk (3.5" diskette)

Digitair® is a registered trademark of Union Switch & Signal Inc.

UNION SWITCH & SIGNAL

Carborne and Integrated Carborne-Wayside Control Systems

UNION SWITCH & SIGNAL

RSE-2D7
Rev. 7-03

Digitair® End-of-Train System Model 6635 Battery Charger/Analyzer

Union Switch & Signal's Digitair Model 6635 Battery Charger/Analyzer is the latest in Nickel-cadmium (Ni-Cad) battery charging technology. The Model 6635 will analyze, recondition and charge up to three NiCad batteries simultaneously.

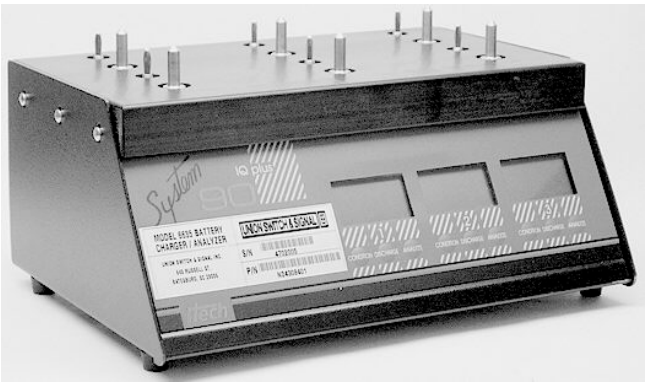

General Description

The Model 6635 Battery Charger/Analyzer is fully automatic and uses a microprocessor and Digital Signal Processing (DSP) to charge, analyze and maintain Digitair End-of-Train (EOT) Ni-Cad batteries. In addition to charging, it can also recondition older EOT NiCad batteries and bring them back to peak performance. Reconditioning is accomplished by a patented DSP system using a distinctive negative voltage-sensing algorithm to assure peak performance thus extending the life cycle of your battery investment. The Model 6635 also incorporates a "Discharge" mode to check for excessive "stand loss". Stand loss is a term used to describe self-discharge at an abnormally high rate in a defective battery.

Each of the three battery stations is equipped with its own set of front panel mounted controls and a LCD information display. Up to three EOT batteries can be charged, conditioned, analyzed and/or discharged simultaneously.

The Model 6635 Battery Charger/Analyzer supports the newly-designed and improved High Capacity (5.5 AH) NiCad EOT battery, providing extended battery life and greater return on your battery investment.

Advantages

- Fully automatic charger
- Up to three batteries can be charged simultaneously
- LCD information display
- Battery pack guide holes assures proper alignment and polarity

Advantages (cont'd)

- Worst case battery charged within six hours
- Analyzes and measures and displays battery capacity
- Condition Mode automatically cycles battery for optimum capacity
- Discharge mode checks for unacceptable "Stand loss"

Application

The Model 6635 will accept up to three EOT Ni-Cad batteries. Simply place the battery onto one of the "battery stations" and align its guide post holes with the guide post on the unit and gently push down until the battery is fully engaged. The Model 6635 automatically places the battery in "Charge" mode unless another mode is selected. Once the operation is complete, the battery can be removed for use or left on an auto-trickle charge until needed.

Specifications

Unit Dimensions:	3.7"H x 10.7"W x 7.7"D
	Weight: 6.5 lbs.
Environmental:	Operating temperature range: 0°C to +50°C
	Storage temp. range: -55°C to +100°C

UNION SWITCH & SIGNAL

RSE-2D7
Rev. 7-03

Digitair® End-of-Train System
Model 6635 Battery Charger/Analyzer

Specifications (cont'd)

Humidity:	95% non-condensing @ 40°C, 96-hour exposure Power Req.: 115 Vac version: 115 Vac +10%, 2.0 A, 50/60 Hz
	220/240 Vac version: 220/240 Vac, +10%, 1.0 A, 50/60 Hz
Battery Charging:	Charge/Discharge Rate: 900 mA +5%
	Maximum mAh battery capacity: 7000 mAh
	Batt. volt. range: 4.8 Vdc - 14.4 Vdc
Capacity:	Up to three Digitair Ni-Cad batteries
Current:	1.4A (max.)

Ordering Information

- Refer to tabulation for Model 6635 Battery Charger/Analyzer ordering information.
- Refer to ***RSE-2D8*** for NiCad batteries.
- Request US&S Service Manual SM-7073 for Model 6635 Battery Charger/Analyzer components.

	Digitair Charger/Analyzer Units
US&S Order No.	
N24308401	Model 6635 Charger/Analyzer - 110V
N24308402	Model 6635 Charger/Analyzer - 220V

Digitair® is a registered trademark of Union Switch & Signal Inc.

Carborne and Integrated Carborne-Wayside Control Systems

UNION SWITCH & SIGNAL

RSE-2D8
Rev. 7-03

Digitair® End-of-Train System
High-Capacity Ni-Cad EOT Battery

US&S' new Digitair Ni-Cad EOT rechargeable battery helps extend the operating life of the Model 6699-CC SBU by providing higher storage capacity than earlier N-Cad batteries. Employing the latest in storage battery technology, each Digitair Ni-Cad provides 5.5 Ampere-hours of power.



General Description

The High-Capacity Ni-Cad battery is a sealed unit with banana jack contacts for connecting power to the SBU, and guide post holes that mate with the guide posts on the Digitair Model 6635 Battery Charger/Analyzer (see. ***RSE 2D7***). The guide posts are located such that the battery cannot be installed in the reverse polarity position. In addition, the banana jack contacts on the battery pack are recessed to help avoid shorts in the event that the battery is placed on a metal surface. Two Ni-Cad batteries are used to power the Model 6699-CC SBU.

Specifications

Charging Capacity:	5.5 Ampere-Hours
Unit Dimension:	2.8" x 6.6 x 2.6
Unit Weight:	3.5 lb.

Ordering Information

- Order replacement Ni-Cad batteries from tabulation below.

	Digitair Battery
US&S Order No.	
303-0021-00	Digitair NiCad Rechargeable Battery, 5AH, 12V

Digitair® is a registered trademark of Union Switch & Signal Inc.

UNION SWITCH & SIGNAL

Carborne and Integrated Carborne-Wayside Control Systems

UNION SWITCH & SIGNAL

RSE-2E1
Rev. 7-03

Train-to-Wayside Communications System (TWC)

US&S Train-to-Wayside Communications systems enable effective management of mass transit rail traffic by quickly and reliably exchanging management data between trains and the traffic control system. US&S can tailor TWC systems from to suit a wide variety of applications ranging from simple 1-way, single-function communications to the most complex 2-way communications required for advanced automated systems such as driverless ATC. Using the simple and flexible TWC product family, US&S has adapted these systems to scores of heavy and light rail transit properties across the United States and around the world. The latest TWC systems employ digital FSK communications to enable fast and dependable delivery of many functions.



General Description

Note

This catalog section describes the latest generation of US&S TWC systems, which are integrated within complete US&S Automatic Train Control (ATC) systems that provide ATP, ATO and ATS functionality. Such systems have been most recently deployed on the LA Green Line, Shanghai Line 2, Tianjin-Binhai and the driverless Copenhagen Metro.

US&S TWC systems provide efficient bi-directional communications between mass transit carborne and wayside ATC subsystems. These systems are typically employed within station areas to provide trains with control and routing information, and to transfer ATC/Vehicle status information back to the wayside and the central control office. The TWC system includes both vehicle and wayside subsystems.

Wayside-to-train information such as train number and destination is uploaded to trains when they arrive in a station area, which is equipped with a TWC inductive communications loop (associated antenna on the train). Train-to-wayside messages returned through the station loop can include confirmation of train number, train length, etc. Examples of the train management functions handled by the TWC system can include:

Wayside-to-Train:

- Station stopping
- Station ID check
- Passenger door opening command
- Passenger door cycling test
- Station dwell time

Wayside-to-Train (cont'd):

- Station departure
- Tractive power speed regulation
- Enter or cancel coast mode
- Select route at turnout
- Skip stop at a station
- Turnback at end of route
- Confirmation of train ID number
- Train length (no. of cars)
- Departure test command
- Wayside Master Clock time reference signals
- Request on-board system and alarm status
- Train layup command

Train-to-Wayside:

- Train properly berthed
- Open passenger doors (left and/or right)
- Passenger station ID report
- Current length (cars)
- Current destination
- Ready for departure
- Status of MicroCab ATP subsystem
- Current operating mode (manual, automatic, etc.)
- Confirmed all doors closed
- Train motion detected

UNION SWITCH & SIGNAL

RSE-2E1
Rev. 7-03

Train-to-Wayside Communications System (TWC)

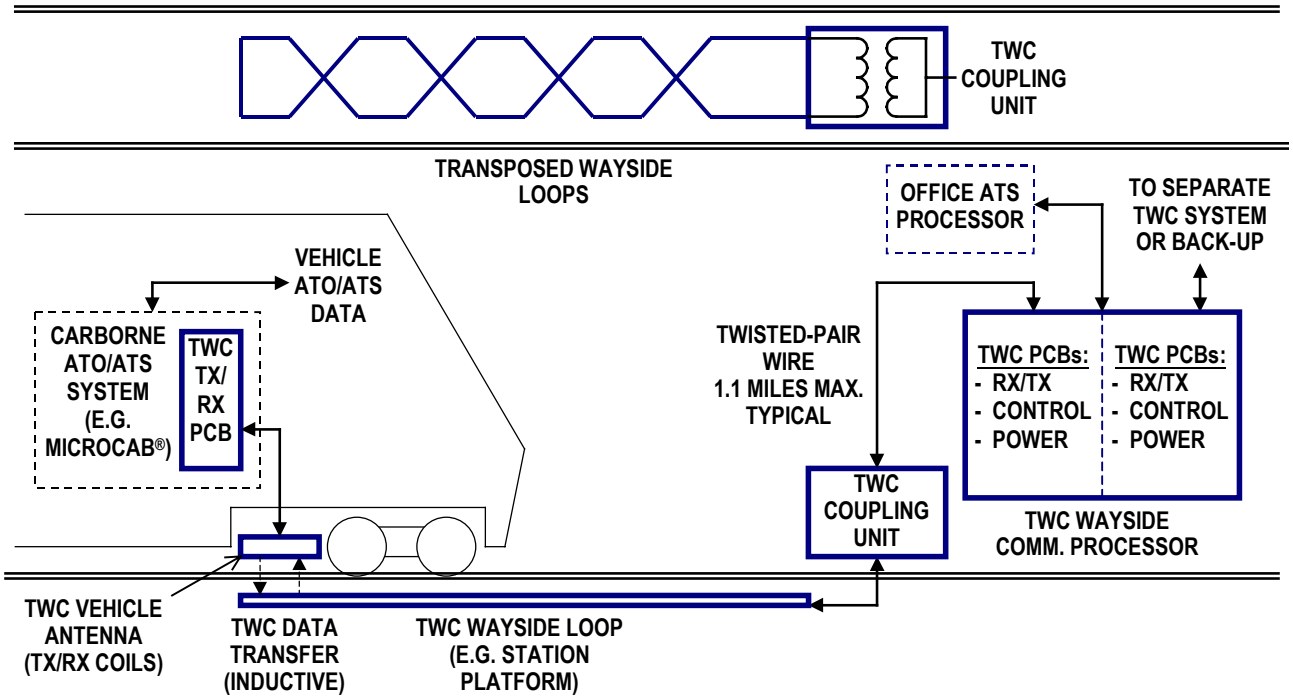

Train-to-Wayside (cont'd):

- Permanent vehicle ID number
- Wheel wear indication (from the MicroCab ATP subsystem)
- Excessive wheel slip/slide during braking approach to station
- Emergency or abnormal conditions (e.g. incorrect door opening)
- Departure test confirmation and results
- Status of various alarms
- Event log data

Advantages

- Adaptable to all types of rail transit vehicles
- Helps maximize traffic management efficiency
- Simple 1-way to complex 2-way applications
- Exchanges wide range of wayside/vehicle data
- Digital FSK communications for high data delivery rates
- Highly dependable inductive-coupled (wireless) communications between vehicle and wayside
- Essential for precision station-stopping
- Carborne TWC readily integrated with MicroCab® ATO

Wayside Subsystem and Operations

US&S TWC wayside subsystem includes a Wayside Communications Processor and track-mounted inductive coils (loops) to communicate with passing trains. These loops are located at station platforms and terminal dispatch areas, while the processor is typically connected to a PC workstation-based Non-Vital Logic Emulator (NVLE), which functions, in part, as a Local Control Panel within a wayside equipment room. (In turn, the NVLE exchanges information with the central office.)

US&S' TWC system uses Frequency Shift Keying (FSK) serial communications to quickly and reliably transfer data between the train and wayside (same method used with US&S' AF-900™ Series Track Circuits; see ***RSE-1F1***).

The TWC wayside system plays a key role in the important Station-Stopping function. Precision station stopping is performed using the track circuit ID and boundary transitions along with TWC loop transpositions. The track circuit ID is used to determine the proper starting point of the stop profile. Track circuit entrance locations and TWC loop transpositions provide distance demarcations that are used to achieve the high positional accuracy. The wayside TWC will go into a Continuous Transmission Mode (CTM) to facilitate transposition detection for station stopping.

Train-to-Wayside Communications System (TWC)

UNION SWITCH & SIGNAL

RSE-2E1
Rev. 7-03

Carborne Subsystem and Operations

The TWC system vehicle equipment includes an undercar antenna to inductively exchange data with the track-mounted TWC wayside coils, and an on-board processor within the ATO portion of the MicroCab system. The antenna housing contains non-transposed loops for TWC signals, and is typically connected to the MicroCab ATO/TWC subsystem. TWC antennas are mounted at each end of the train, ahead of the end axle, but close enough to the end truck to keep the antenna within the layout of the wayside TWC loops where ever they are located on the transit system. The TWC communications channel is unaffected by moisture, dirt, ice and other typical wayside contaminants.

The TWC carborne equipment transmits one message in a continuous cycle, then waits for a reply from a wayside TWC transmitter before transmitting the message again. The wayside transmits a message only after having received a message from the train. When the train is within the range of a wayside TWC transmitter, a 2-way conversation takes place.

Integration With AFO-IIC-Based Berthing System

For selected applications such as driverless operation, the carborne TWC antenna can incorporate a US&S AFO-IIC transponder antenna for the purpose of communicating high-precision Vzero and Train-Berthed information with a separate wayside AFO-IIC transponder antenna. Refer to ***RSE-2F1*** for more information on this AFO-IIC application.

Major Components

Wayside Subsystem

Major components of the typical TWC wayside system include the following:

- Wayside Communications Processor (Cardfile) - Processes office and vehicle communications for transmission to and from vehicle.
- Coupling Unit - Provides impedance-matching transformer coupling between the transmission line (from the cardfile) and the track-mounted wire loop.
- Inductive Loop - Track-mounted wire generates field for inductive coupling of data signals generated from the wayside cardfile and from the vehicle antenna.

The Wayside Communications Processor cardfile houses the electronics responsible for preparing wayside messages that will be uploaded to the passing train. The cardfile also processes messages received from the train for delivery to the associated wayside computer equipment. This unit consists of a standard Eurocard type PCB cardfile designed for mounting in a 19 inch equipment rack. Each plug-in PCB is equipped with its own front panel for user controls and indicators.

Typically, several TWC cardfiles will be mounted in a common rack, each serving a different set of TWC communications channels. Each TWC wayside cardfile is equipped with two independent groups of PCBs (“A” and “B”), each controlling a different Coupling Unit/Track Loop communications channel.

Typical Wayside Communications Processor Cardfile



The TWC Coupling Unit provides impedance-matching transformer coupling between the transmission line from wayside cardfile and the track-mounted wire loop. This unit consists of a welded, weather-proof stainless steel enclosure designed for pedestal or other suitable 4-point mounting near the track. The Coupling Unit is mounted as near as possible to wayside loop. Typical maximum separation is 12 feet (cable length).

Typical Wayside Coupling Unit



The track-mounted TWC wire loop consists of twisted-pair, stranded #6 AWG wire secured to the ties with steel staples. It is centered between the rails and transposed every 40 feet to eliminate noise inductions from the rails. The looped wires are run the entire length of the station platform and terminated at the “T” conduit box of the Coupling Unit.

Transposed Track Loop



UNION SWITCH & SIGNAL

RSE-2E1
Rev. 7-03

Train-to-Wayside Communications System (TWC)

Carborne Subsystem

Major TWC carborne components typically include:

- Transmit/Receive PCB - Processes/converts onboard-generated data for transmission to the wayside TWC equipment, and processes/converts wayside TWC signals for use by the onboard ATC system (ATO subsystem).
- Antenna - Underbody-mounted wire generates field for inductive coupling of data signals generated from the Transmit/Receive PCB and passing track-mounted inductive loops.

The on-board Receive/Transmit PCB is identical in design and function to the Receive/Transmit PCB in the Wayside Communications Processor cardfile. This board also includes a potentiometer adjustment for the output signal level. The Receive/Transmit PCB is mounted in the MicroCab ATO cardfile and receives its operating power from that cardfile's power supply PCB. A dedicated serial link is used to pass TWC-related communications between this board and the ATO's CPU board.

The TWC vehicle antenna consists of a flat fiberglass panel which is embedded with the detection and transmission wire loops. External wiring is routed to this panel through a top-mounted junction box. A perimeter mounting bracket (steel) provides for underbody mounting of the antenna.

Specifications (Typical)

Communications:	Inductive, between wayside and car loop antennas
	Mode: Binary Frequency-Shift Keyed (FSK)
Max. Speed for TWC:	45 mph
Car Antenna Mtg:	Centered between rails
	Operational height: 15.24 cm, + 2.5 cm (6 inches + 1 inch) from the top of rail.
Car Ant.-to-ATC Rack:	Shielded/twisted pair #12 AWG (EMI-limiting)
Wayside Cardfile:	Design: Standard 19 rack mount, Eurocard design
	Power: 110 Vac (nom.)
	Serial port (to office): Two 9-pin, RS-498 serial data ports
Wayside Wire Loop:	Stranded #6 AWG wire
	Transposed every 40 feet

Typical TWC Vehicle Antenna

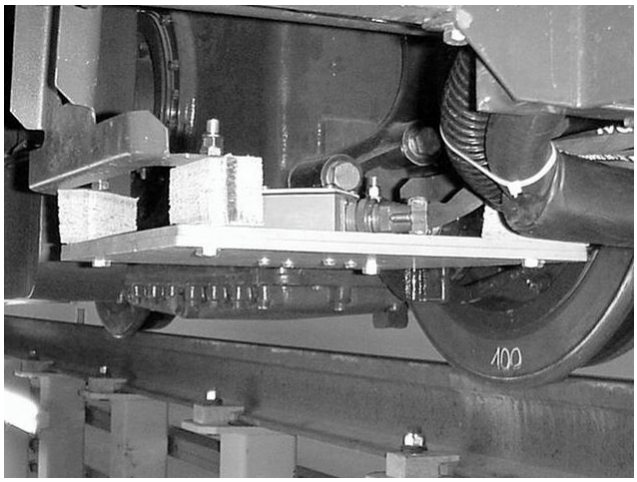

Additional Information

For additional information on US&S TWC system applications, contact your US&S Account Executive.

MicroCab® is a registered trademark of Union Switch & Signal Inc. AF-900™ is a trademark of Union Switch & Signal Inc.

Carborne and Integrated Carborne-Wayside Control Systems

UNION SWITCH & SIGNAL

RSE-2F1
Rev. 7-03

AFO-Based Transit Vehicle Precision Berthing System

US&S prides itself on precision control of mass transit vehicles in the approach to, berthing in and departure from passenger station platforms. US&S vital and non-vital ATC equipment such as the MicroLok® II Wayside Controller, MicroCab® Cab Signal System and Train-to-Wayside Communication (TWC) system help ensure that transit vehicles decelerate into the station at the proper braking rate, are correctly positioned relative to the passenger platform area, and that both vehicle and platform doors only open at the right moment and for the right duration. For stations requiring highly accurate, simultaneous alignment and operation of both vehicle and platform doors, US&S has developed an ingenious application of the proven AFO-IIC transmitter and receiver equipment.



General Description

For vehicle and platform door control, the AFO-IIC transmitter and receiver units are applied on both the wayside and on-board the vehicle as follows:

- Wayside
  - 1660 Hz AFO-IIC Transmitter/Receiver set, and 2365 Hz AFO-IIC Transmitter/Receiver set in signal equipment room
  - AFO transmitter antenna coils between the rails
  - Wayside Coupling Equipment for linking the Transmitter/Receiver set to the antenna coils over long cable lengths
- Vehicle
  - 1660 Hz AFO-IIC Transmitter/Receiver set, and 2365 Hz AFO-IIC Transmitter/Receiver set, typically mounted in the main carborne ATC enclosure
  - Transponder coil, typically integrated in the same undercar housing as the carborne TWC inductive coil

The two sets of AFO equipment share the same cable and antennas. Each AFO-IIC wayside/vehicle transmitter/receiver set is assigned unique frequencies.

At the platform signal room location, an AFO-IIC transmitter introduces a 1660 Hz carrier frequency sine wave modulated at a 27 Hz rate into the wayside AF antenna. When the wayside and vehicle antennas are in the correct proximity, the associated on-board AFO-IIC receiver detects the 1660 Hz signal from its wayside transmitter. For communications from the vehicle back to the wayside, the alternate (2365 Hz) set of AFO-IIC equipment is used. This system of communications is used for precision berthing and alignment of platform and vehicle doors in a vital manner.

Two AFO-IIC wayside antennas are installed at the end of the platform track circuit so that, when the train is positioned with the platform doors directly opposite the train doors, the corresponding AFO-IIC antennas on the train are positioned directly above some portion of the loops of the wayside AFO-IIC antennas.

The 1660 Hz wayside transmission indicates the train has berthed. Control logic on the train recognizes that the train has stopped (Vzero), triggering the 2365 Hz “berthed” signal back to the wayside. The wayside 2365 Hz equipment responds to this signal by energizing a vital relay output (to interlocking controller) to open the platform doors.

Advantages

- Provides high-precision positioning data for combined opening of vehicle and station platform doors
- Adaptable to all types of vehicles and station platform/track configurations
- Uses proven US&S AFO-IIC transmitter/receiver technology
- Integrated TWC/AFO-IIC antenna simplifies vehicle antenna hardware requirements

Product Designs and Application

The Train-Berthing version of the AFO-IIC system uses the same transmitter and receiver product designs of the familiar AFO-IIC Track Circuits. All circuitry in these units use printed circuit board construction. PC boards are hard-wired in a sheet steel housing designed for shelf/wall or rack mounting with AREMA terminal strips (for circuit connections).

UNION SWITCH & SIGNAL

RSE-2F1
Rev. 7-03

AFO-Based Transit Vehicle Precision Berthing System

AFO-Based Precision Berthing System – Basic Configuration

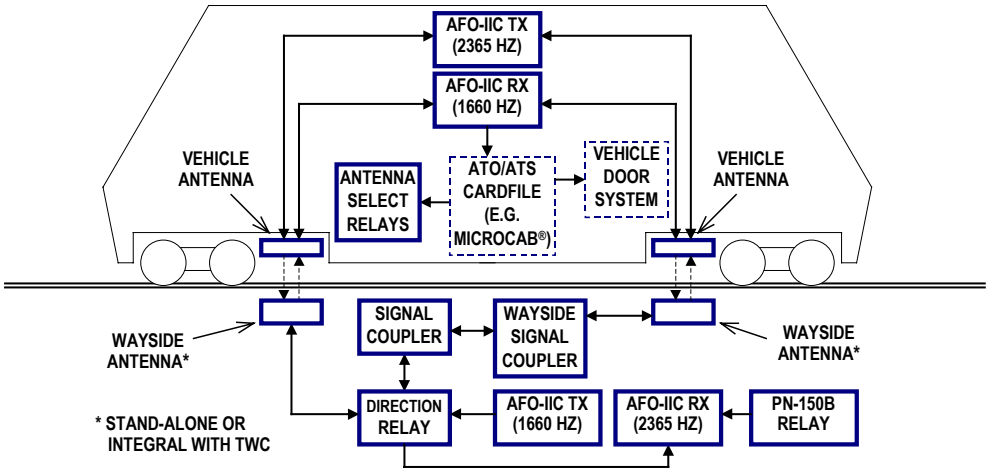

Product Designs and Application (cont'd)

The AFO-IIC track antenna is encapsulated in fiberglass and mounted in the center between the running rails. For the vehicle, the combined TWC/AFO-IIC antenna also uses fiberglass construction and is centrally mounted relative to the rails.

Wayside Coupling Equipment is used for long-distance (e.g. 100 meters) connections between the AFO-IIC transmitter and track antenna to minimize signal loss. This equipment consists of a signal room Coupling Module, and another Coupling Module mounted near the track antenna. Coupling Units consists of either a step-up or a step-down transformer. Each transformer, mounted on a printed circuit board, is in turn mounted inside a junction box or a "DIN" enclosure located at the wayside or the signal room. The coupler nearest the antenna includes a PCB-mounted transformer mounted to an enclosure that can be wall-mounted, pole-mounted or surface-mounted (between the rails).

For antenna installations where Wayside Coupling Equipment is not required, a customer-specified junction box is used to interface the transmitter/receiver set to the track antenna.

AFO-IIC Transmitter and Receiver Unit Dimensions

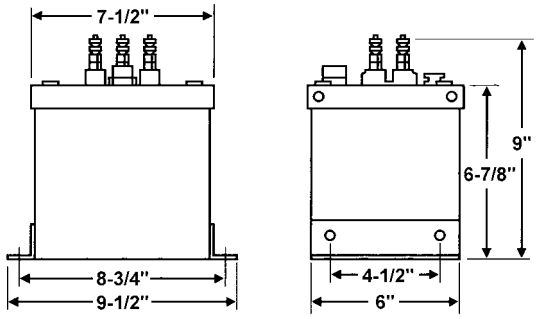

Combined AFO-IIC/TWC Vehicle Antenna

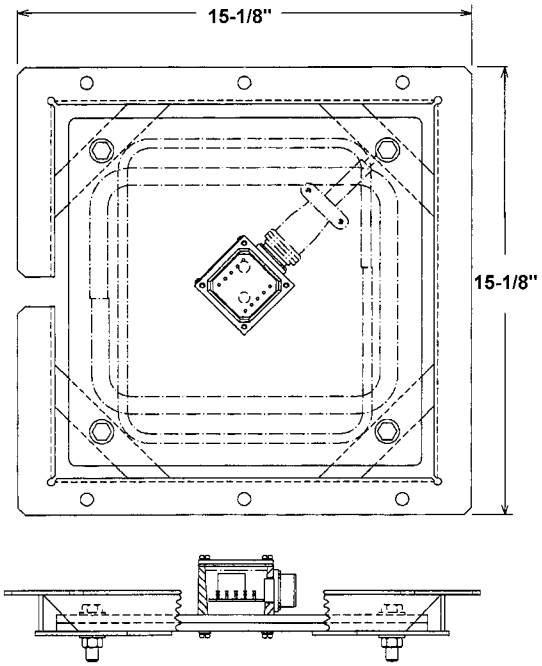

Typical Wayside Antenna Mounting (Rail Type)

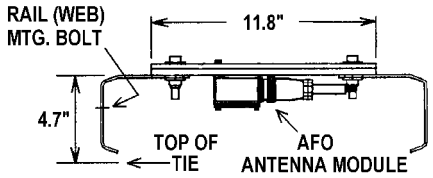

AFO-Based Transit Vehicle Precision Berthing System

UNION SWITCH & SIGNAL

RSE-2F1
Rev. 7-03

Specifications

AFO-IIC Transmitter

Input Voltage:	12 Vdc
Input Current:	With 1.5 ohm output load: Tapped output = 1.9A @12V input
Output Voltage:	Tapped output = 2.0V P-P during "on" period of modulation
Output Impedance:	0.49 ohm
Operating Frequencies:	1660 and 2365 Hz
Operating Temperature:	-40°C to +71°C
Surge Protection:	Built-in
Unit Dimensions:	8"H x 6-1/8"W
Unit Weight:	7 lbs., 11 oz.

AFO-IIC Receiver

Input Voltage:	9.5 to 16.2 Vdc
Input Current:	0.07A @12 Vdc
Output Voltage:	5.5 Vdc (min.) with input signal set to specified receiver sensitivity and 9.5 V battery.
Signal Sensitivity:	15 to 60 mV minimum detectable signal (measured with modulator off), carrier freq. dependent
Input Impedance (Track):	1.25 ohm at center of assigned freq. (nom.)
Output Load:	400 or 500 ohm relay (US&S PN-150BH or DN-22BH)

AFO-IIC Receiver (cont'd)

Bandwidth:	-3 dB @ +4.0% of assigned freq.
Operating Frequencies:	See ordering tab.
Operating Temperature:	-40oC to +71oC
Surge Protection:	Built-in
Unit Dimensions:	8"H x 6-1/8"W
Unit Weight:	8 lbs., 10 oz.

Wayside Antenna

Unit Dimensions:	12"W x 82"L x 5/8"D
Sep. from Car Antenna:	10" (max.)

Vehicle Antenna

Unit Dimensions:	11-3/4" x 11-3/4"

Ordering Information

- Refer to ordering tabulations for individual AFO-IIC Platform Berthing System components.
- Contact your US&S Sales Representative for additional application possibilities and integration within a complete US&S ATC system.
- Request US&S Service Manual 6414 for replacement parts.

	AFO-IIC Transmitters	
US&S Order No.	Carrier Freq. (Hz)	Carrier Mod. (Hz)
N4510522989	1660	27
N4510522990	2365	49

	AFO-IIC Receivers	
US&S Order No.	Carrier Freq. (Hz)	Carrier Mod. (Hz)
N4510523159	1660	27
N4510523160	2365	49

	AFO-IIC Wayside Equipment	
US&S Order No.		Notes
X12500502	Antenna + H/W	(1)
X12500503	Antenna + H/W	(2)
X12500504	Antenna + H/W	(3)
N12800101	Cable Coupling Module - Sig. Room	
N37500605	Cable Coupling Module - Wayside	
	Note (1): Rail mounting applic. Note (2): Level concrete applic. Note (3): Sloped concrete applic.	

	AFO-IIC Vehicle Equipment
US&S Order No.	
N25401401	AFO-IIC Transceiver Antenna

MicroLok ® II and MicroCab® are registered trademarks of Union Switch & Signal Inc.

UNION SWITCH & SIGNAL



Wayside Signaling Products

Switch Machine Control
- SML-24 Switch Lock and SMC Controller
- SML-110 Switch Lock and PN-150SSR Solid-State Relay
- Switch Machine Controller - Biased Neutral

AFO Electronics (Highway Crossing)
- AFO-IIC Track Circuit - Non-Electrified Territory Applications
- AFO-IIC Track Circuit - Electrified Territory Applications
- ATT-20 Audio Track Transceiver

Misc. Track Circuits
- TRU-II Track Resonant Unit and Code Reset Unit
- Phase Selective Unit (PSU)

Train Stops
- EM-l Automatic Train Stop
- Style "S" Electro-Pneumatic Train Stop

Power Supplies
- W-400 Transformer
- W-800 Transformer
- CCR Constant Current Rectifiers
- CPR Constant Potential Rectifiers
- F-81 DC/AC Inverter
- F-82 DC/AC Inverter
- F-85 Inverter-Driver

Circuit Protection
- Surge Ripple Filter
- USG-A Lightning Arresters
- USSP Secondary Surge Suppressors
- CMF-101 Common Mode Filter

UNION SWITCH & SIGNAL

RSE-3A1
Rev. 7-03

SML-24 Switch Lock and SMC Controller

Vital relays have been a mainstay for switch machine control in the field. While they have established an enviable history of reliable performance, vital relays require periodic maintenance for this degree of reliability to be achieved. US&S has developed a cost-effective yet equally reliable alternative for low-voltage switch machine control applications: The SML-24 Switch Lock and its companion module, the SMC controller.



General Description and Application

Each SML-24 allows for control of up to two switch machines simultaneously. The maximum current capacity of the SML, which functions as a DC/DC converter, is capable of driving one stalled and one operating switch machine at the same time. Each SMC can control one switch machine. The SMC is designed to interface with 2, 3, or 5-wire control switch machines and solid-state vital wayside controllers, such as the US&S MicroLok® II and E-Code™ systems, as well as equivalent non-US&S systems. The SML and SMC units allow replacement of vital switch control relays, such as lock and overload.

The SML-24 uses both 24 Vdc and 12 Vdc power sources and a 12 volt "Lock" gating signal. The NW (normal) and RW (reverse) request signals are applied to the SMC unit. When the SML-24 outputs the lock signal, it enables the SML to output 24 Vdc at a maximum current of approximately 35 amps to drive low-voltage switch machines.

A thermal switch protects the SML unit from overheating by shutting it down until the temperature is reduced to an acceptable level, at which time the switch resets itself. A Power LED on the front of the unit indicates when the output voltage is present. Any short circuit on the SML output will cause the LED to go dark.

Advantages

- Eliminates various switch machine electro-mech. relays
- Can simultaneously operate two low-voltage switch machines
- Designed to operate 2-, 3 or 5-wire controlled switch machines
- Interfaces to US&S MicroLok II, E-Code or related non-US&S interlocking controllers
- SML incorporates internal overload thermal protection, "power-on" LED
- "Noise-free" units do not interfere with adjacent signaling circuits

Product Design

SML-24

The SML-24 is contained in an assembled sheet metal housing designed for mounting on standard equipment rack relay mounting bars. Typically, the unit is mounted with a combination rack mounting plate/AAR terminal board that provides AAR terminals for external wiring. The SML unit may be mounted adjacent to the controlling vital system without creating "noise" problems in logic or I/O wiring.

A 12-pin male connector on the rear of the unit permits plug connection of the SML unit to the rack mounting plate. Major subassemblies inside the SML-24 are mounted on a chassis shelf or are attached to the underside of the aluminum heat sink. Components are readily accessed by removing a one-piece, wrap-around shell on the housing. A single LED on the front panel of the unit indicates the presence of output power to drive the switch machine.

SMC

The SMC is designed for mounting on standard equipment rack relay mounting bars. The SMC incorporates two back-to-back mounted, heavy duty, 12V DPDT power relays for transferring power to the switch machine. Both relays are protected with a single high-durability Lexan® cover. Two LEDs indicate which relay is energized (normal or reverse). The SMC unit may be mounted adjacent to the controlling vital system without creating "noise" problems in logic or I/O wiring.

UNION SWITCH & SIGNAL

RSE-3A1
Rev. 7-03

SML-24 Switch Lock and SMC Controller

Specifications

SML-24

Input Voltage:	24 Vdc to 36 Vdc
Output Voltage/Current:	24 Vdc @ 35A (max.)
Dielectric Voltage:	2000 V rms
Short Circuit Protection:	Built-in; set to 41A
Max. Wiring Distance:	SML to switch machine: 500 ft. using 1000 ft. #6 wire @ 0.42W/1000 ft. producing 9.7V drop @ 23A
24V Wiring:	#6 TC blue or equivalent
Operating Temp.:	-40°C to +70°C

SMC

Input Control Voltage:	9.8 Vdc to 16.2 Vdc
Output Voltage/Current:	24 Vdc @ 35A (max.)
Operating Temp.:	-40°C to +70°C

Basic SML-24 Circuit Application

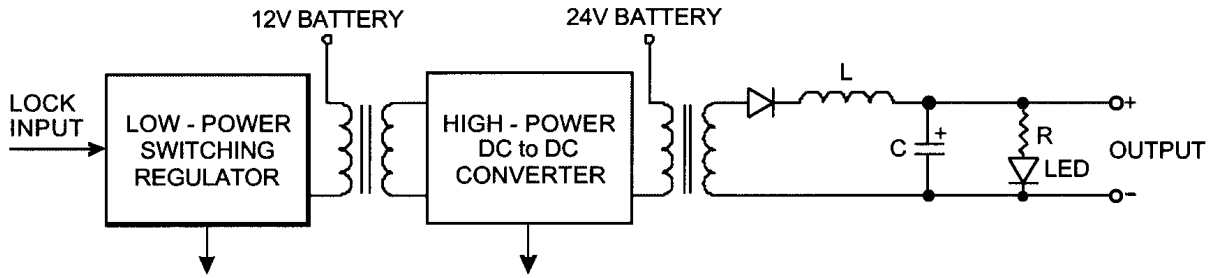

Basic SML-24/SMC Circuit Application

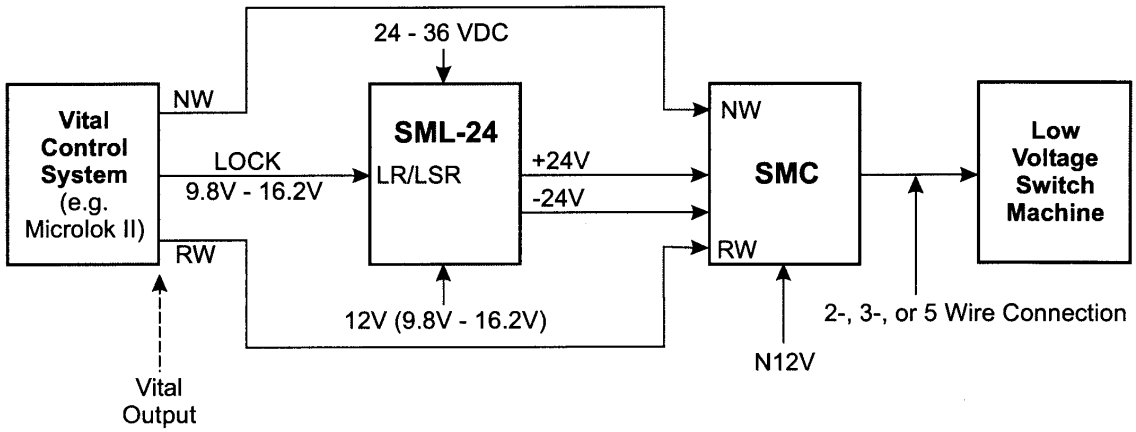

SML-24 Switch Lock and SMC Controller

UNION SWITCH & SIGNAL

RSE-3A1
Rev. 7-03

SML-24 Unit Design

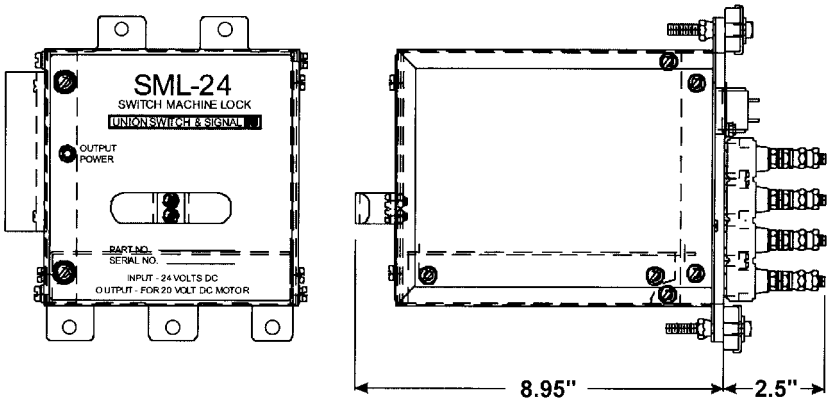

SMC Unit Design

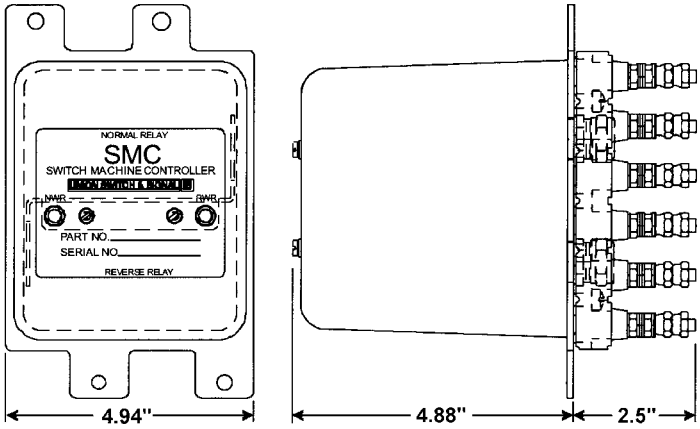

Ordering Information

- Refer to tabulation below for SML-24 and SMC ordering information.
- Request US&S Service Manual SM-6810A for SML-24 and SMC components.

	SML-24 and SMC Units
US&S Order No.	
N47300701 N49800901	SML-24 Switch Lock with Rack Munting Base SMC - Low Voltage

MicroLok® II is a registered trademark of Union Switch & Signal Inc. E-Code™ is a trademark of Union Switch & Signal Inc.

UNION SWITCH & SIGNAL

UNION SWITCH & SIGNAL

RSE-3A2
Rev. 7-03

SML-110 Switch Lock and PN-150SSR Solid-State Relay

Vital relays have been a mainstay for switch machine control in the field. While they have established an enviable history of reliable performance, vital relays require periodic maintenance for this degree of reliability to be achieved. US&S has developed a cost-effective yet equally reliable alternative: The SML-110 High Voltage Solid State Switch Machine Lock and associated PN-150SSR relay. This unit can operate two high voltage switch machines at the same time.



General Description

The SML-110 Switch Machine Lock is a vital conditional power supply that provides power to a switch machine. It delivers a nominal 120 Vdc output with a limited current of 23 amps from an ac or dc source when activated by a nominal 12 Vdc input. This output is sufficient to simultaneously drive two switch machines. To deliver an output voltage, the SML-110 requires the presence of two out of three inputs: Switch machine lock and either the normal or the reverse position request. These inputs can be relay contact closures or outputs from an interlocking processor such as the US&S MicroLok® II or E-Code™ vital controllers. The output voltage of the SML -110 is fed as an input to the PN-150SSR Solid State Relay.

The PN-150SSR Relay routes the correct polarity voltage that is required to operate the switch machine to either the normal or the reverse position. In addition to the voltage from the SML-110, PN-150SSR accepts a second input, which is either the normal or the reverse switch request. The input can originate from relay contacts or a vital interlocking processor such as MicroLok II or E-Code.

Product Description

The SML-110 is contained in an assembled sheet metal housing designed for mounting on standard equipment rack relay mounting bars. Typically, the unit is mounted with a combination rack mounting plate/AAR terminal board that provides AAR terminals for external wiring. A 12-pin male connector on the rear of the unit permits plug connection of the SML unit to the rack mounting plate. Major subassemblies inside the SML-110 are mounted on a chassis shelf or are attached to the underside of the aluminum heat sink. Components are readily accessed by removing a 1-piece, wrap-around shell on the housing. A single LED on the front panel of the unit indicates the presence of output power to drive the switch machine.

Advantages

- Reduced cost when compared to equivalent vital relay control.
- Compatible with existing relay rack mounting.
- Eliminates various switch machine electro-mech. relays
- Can simultaneously operate two high voltage switch machines
- Interfaces to US&S MicroLok II, E-Code or related non-US&S interlocking controllers
- Built-in overload and short circuit protection in SML unit.

Application

The SML-110 Switch Machine Lock and the PN-150SSR Solid State Relay replace the vital relays normally used to control switch machines. They can be installed at microprocessor-based or conventional vital relay interlockings. The SML -110 unit can sustain a short circuit on its output terminals without suffering any damage. Overload protection is provided with a built-in timer. The timer will shut off the SML-110 output after 18 seconds if switch correspondence is not achieved. Correspondence normally occurs well before 18 seconds, and, that time, the switch machine contacts interrupt the motor current.

If preferred, traditional overload protection methods can also be used. A processor based interlocking controller can be programmed to shut off the SML-110 after a predetermined time. For a relay-based interlocking applications, an overload relay can be used.

MicroLok® II is a registered trademark of Union Switch & Signal Inc. E-Code™ is a trademark of Union Switch & Signal Inc.

UNION SWITCH & SIGNAL

RSE-3A2
Rev. 7-03

SML-110 Switch Lock and PN-150SSR Solid-State Relay

Application (cont'd)

A single switch requires one SML-110 unit and one PN-150SSR Solid State Relay. In the case of a double crossover, the same SML-110 unit can be used for all machines at the location. One PN-150SSR relay is required for each switch.

Designed and manufactured for mounting in a standard relay rack, the SML-110 Switch Lock occupies three US&S PN-150B relay spaces and nests with other relays.

Specifications

SML-110

Input Voltage:	90 to 130 Vac; 90 to 140 Vdc.
Output Voltage:	125 Vdc (current limit to 23A).
Input-to-Output Isolation:	2000 Vac rms
Short Circuit Protection:	Built-in; set to 23A
Wiring - SML to Switch:	500 ft. (max.), 1000 ft. #6 wire @ 1.0 ohms /1000 ft., producing 24V drop @ 15A
110V Wiring:	#12 TC blue or equivalent
Internal Shut-Off Timer:	14 to 20 sec.
Operating Temperature:	-40°C to +70°C.

Ordering Information

- Refer to tabulation for SML-110 ordering information.
- Request US&S Service Manual SM-6810B for SML-110 and PN-150SSR components.

SML-110/PN-150SSR Circuit Application

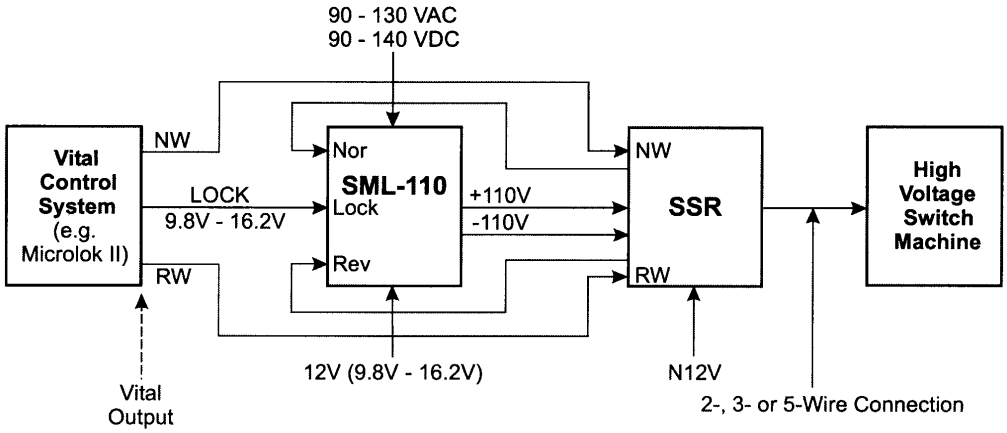

SML-110 Unit Design

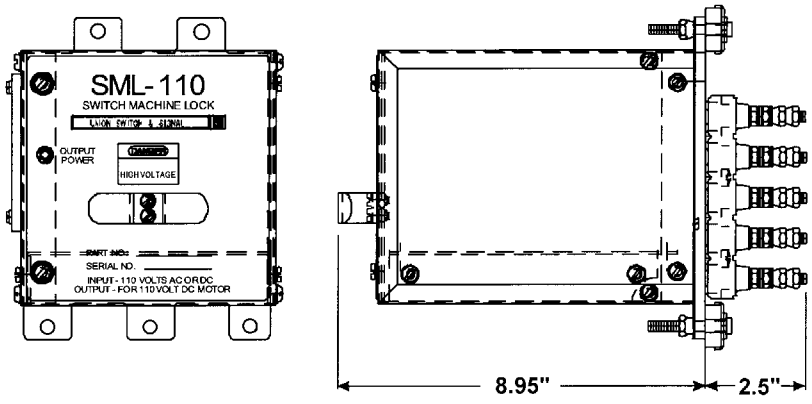

	SML-110 and PN-150SSR Units
US&S Order No.	
N47302301	SML-110 Switch Lock with Rack Mounting Base
N47302302	SML-110 Switch Lock Module Only
N47302303	SML-110 Switch Lock Mounting Base Only
N40103601	PN-150SSR Solid-State Relay

UNION SWITCH & SIGNAL

RSE-3A3
Rev. 7-03

Switch Machine Controller – Biased Neutral

As railroads strive to eliminate costly electro-mechanical vital relays, they are increasingly turning to solid-state control of wayside locations. To replace the various switch control relays needed to drive GRS (Alstom) switch machines, US&S has developed the SMC-BN solid-state control package.



General Description and Application

The SMC-BN is a biased neutral stand-alone switch machine controller designed to control two GRS (Alstom) switch machines fitted with biased neutral controllers, in tandem. The controller is capable of driving two 36W switch machines in parallel, and is designed to replace traditional lock and overload relays and delivers 1 amp at 12 Vdc of either polarity. A DC/DC converter within the unit produces an output when two of the inputs (LR/LSR and RWZ or LR/LSR and NWZ) are energized at a nominal 12 Vdc. The output is transformer-coupled and is isolated from the battery and all inputs. Also, the output is short circuit-protected without the use of fuses.

The SMC-BN is available in a rack-mounted and a shelf-mounted version. AAR terminals on the rear of the mounting plate facilitate wiring to the device.

Advantages

- Replaces costly electro-mechanical relays
- Can drive two GRS (Alstom) switch machines simultaneously
- Transformer-protected output
- Built-in short circuit protection

Specifications

Input Control Voltage:	9.8 Vdc to 16.2 Vdc
Output Voltage/Current:	1A at 12 Vdc (@nom. battery of 12V)
Operating Temperature:	-40° to +70°C

SMC-BN Circuit Design and Application

(See reverse side for unit design.)

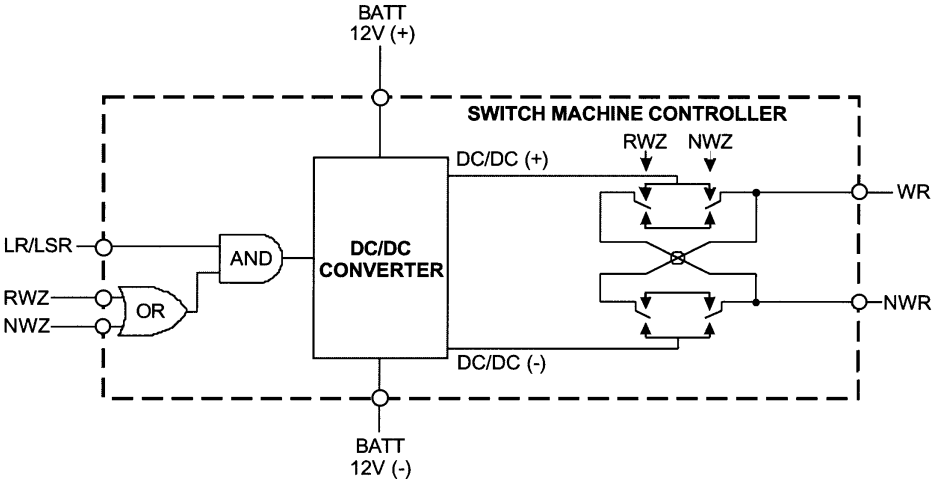

UNION SWITCH & SIGNAL

RSE-3A3
Rev. 7-03

Switch Machine Controller Biased Neutral

Ordering Information

- Refer to tabulation belowfor SMC BN ordering information.
- Request US&S Service Manual SM-6810A for SMC-BN components.

SMC-BN Unit Design

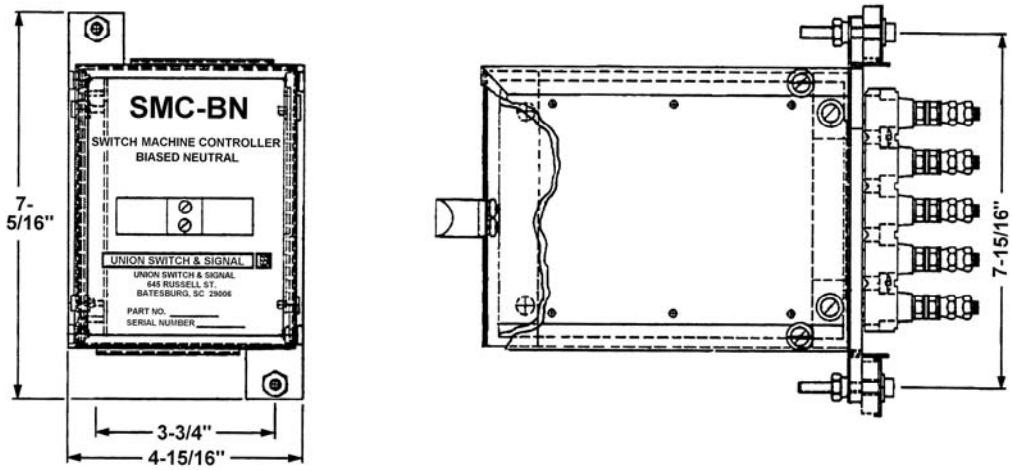

	SMC-BN Unit
US&S Order No.	
N49800101	Switch Machine Controller Biased Neutral

Wayside Products

UNION SWITCH & SIGNAL

RSE-3B1
Rev. 7-03

AFO-IIC Track Circuit
Non-Electrified Territory Applications

The US&S AFO-IIC track circuit system is designed to provide train detection in territories without insulated joints. It represents the latest development in US&S' highly reliable series of AFO-II systems. AFO-IIC offers even greater flexibility in track circuit selection than before, and incorporates design improvements that further enhance compatibility with other track circuit equipment.





General Description

An AFO track circuit is composed of a transmitter, receiver and receiver relay. The transmitter and receiver use a dc power source for operation. The transmitter introduces an audio signal of a specific assigned frequency into the track through two wires connected directly to the rails. The point where wires are connected defines one end of the AFO-IIC track circuit.

The AFO-IIC receiver only responds to a specific assigned frequency. The receiver is also connected to the rails with two wires and this point defines the other end of the AFO-IIC track circuit. Upon receiving the proper frequency, the receiver detects, amplifies and rectifies the signal to provide an output to operate an external relay such as the US&S PN-150BH. The contacts of the relay are then employed in the same fashion as conventional track relay contacts.

The AFO-IIC series includes a transmitter and a receiver. Each consists of a sheet steel enclosure, with printed circuit board(s) attached to the top cover for ease of maintenance. Standard AAR terminals are provided on both units for external connections. The receiver includes a screwdriver-adjustable sensitivity control. Both units are designed for shelf, wall or rack mounting using standard hardware.

Advantages

- Requires no insulated rail joints
- Versatile - multiple frequencies between 800 - 5000 Hz
- Compatible with motion detectors, dc circuits, other AFO

Application

The AFO-IIC track circuit detects the presence of a train through loss of the audio frequency signal which is shunted by the train. A series of AFO-IIC track circuits can be superimposed on a track section. Each track circuit operates independently without interference from the operation of other AFO-IIC or dc track circuits. This is particularly important where

Application (cont'd)

adjacent highway crossings have overlapping approach limits. It also allows an overlap at the crossing for an island circuit.

AFO-IIC transmitters and receivers are directly interchangeable and compatible with earlier AFO-II and AFO-IIB equipment. The AFO-IIC, however, provides two major advantages:

- Frequency Selection - AFO-IIC equipment offers an unlimited range of frequencies between 800 and 5000 Hz. This allows greater flexibility in applying new or replacement AFO in territories where frequency compatibility with other overlay equipment is required.
- Improved Modulation - AFO-IIC uses sine wave modulation of the carrier frequency, rather than the square wave of previous systems. This reduces harmonic noise applied to the track, and minimizes interference to other equipment.

NOTE: If planning a new installation using the AFO-IIC system, consult US&S Sales or request Service Manual 6134 before ordering equipment. AFO-IIC installations require careful analysis of track circuit configuration, frequencies, possible audio frequency interference sources etc. This analysis is essential to development of a safe and reliable AFO-IIC system.

Specifications

Transmitter

Input Voltage:	9.9 to 16.2 Vdc
Input Current:	0.40A
Output Voltage:	5.0 V P-P
Output Impedance:	1 ohm
Operating Frequencies:	See ordering tabulation
Temperature Range:	-40° to + 70°C

UNION SWITCH & SIGNAL

AFO-IIC Track Circuit
Non-Electrified Territory Applications

RSE-3B1
Rev. 7-03

Specifications (cont'd)

Receiver

Input Voltage:	9.9 to 16.2 Vdc
Input Current:	0.07A
Output Voltage:	To 400 ohm relay: 5.5 Vdc
Signal Sensitivity:	5 mV rms, minimum
Input Impedance:	1.25 ohm
Bandwidth: frequency	3db @ +4.0% of assigned
Operating Frequencies:	See ordering tabulation
Temperature Range:	-40° to + 70°C

Ordering Information

- Refer to ordering tabulation for standard AFO-IIC and Track Coupling Unit order numbers
- If an AFO-IIC unit with a different operating frequency (than those listed) is required, contact US&S to request frequency in place of unit order numbers.
- To order related track circuit equipment:
  - Refer to ***RSE-4G2*** for PN-150BH relay (other types may be required depending upon application).
  - Refer to ***RSE-3H1*** for Surge Ripple Filter
  - Refer to ***RSE-3H3*** for USGA lightning arresters.
- Request US&S Service Manual 6134 for AFO-IIC parts.

General System Application (Highway Crossing)

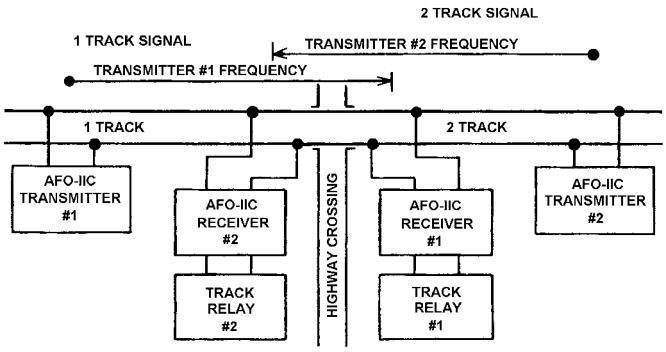

Unit Dimensions*

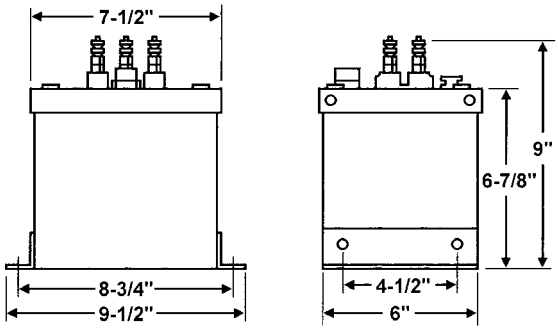

***Applies to Transmitter, Receiver and Coupling Unit**

	AFO-IIC Transmitters	
US&S Order No.	Carrier Freq. (Hz)	Carrier Mod. (Hz)
N4510522965	870	18
N4510522966	885	18
N4510522967	930	18
N4510522969	980	22
N4510522970	1050	22
N4510522971	1120	22
N4510522972	1180	22
N4510522973	1215	22
N4510522974	1285	27
N4510522976	1420	27
N4510522978	1660	27
N4510522979	1860	39
N4510522981	2140	39
N4510522983	2540	39
N4510522985	3360	68

	AFO-IIC Receivers	
US&S Order No.	Carrier Freq. (Hz)	Carrier Mod. (Hz)
N4510523165	870	18
N4510523166	885	18
N4510523167	930	18
N4510523168	945	18
N4510523169	980	22
N4510523170	1050	22
N4510523171	1120	22
N4510523172	1180	22
N4510523174	1285	27
N4510523176	1420	27
N4510523178	1660	27
N4510523179	1860	39
N4510523181	2140	39
N4510523183	2540	39
N4510523185	3360	68

	Track Coupling Units
US&S Order No.	Applicable Carrier Frequencies
N4510521903	870, 980, 1180, 1285, 1660, 1945
N4510521904	945, 1215, 1520, 2365

Wayside Products

UNION SWITCH & SIGNAL

RSE-3B2
Rev. 7-03

AFO-IIC Track Circuit
Electrified Territory Application

US&S' AFO-IIC Track Circuit for non-electrified territory applications has served the rail industry well for several decades. However, the electromagnetic environment associated with a DC electrified railroad is greatly different than that encountered in a diesel-powered rail line. As a result, the standard AFO-IIC Transmitter output power and receiver sensitivity have been modified in the new product to provide adequate operational reliability in the EMI environment. This new version of the AFO-IIC also provides modified transmitters, Track Coupling Units and Cable-to-Wayside Coupling equipment in applications where power is not accessible at remote locations.

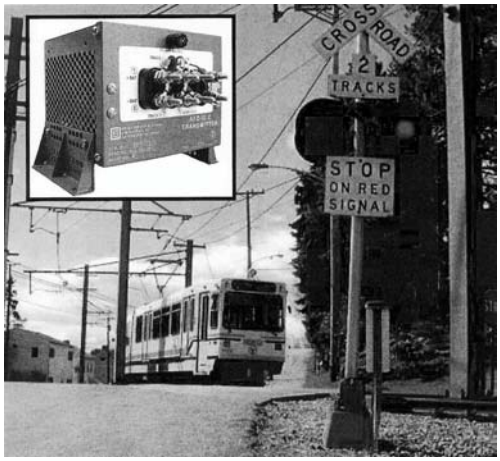

General Description

The basic electrified territory AFO-IIC track circuit is comprised of a Transmitter, Receiver and associated receiver relay. In the case of a highway crossing island circuit, a transceiver (e.g. US&S ATT-20) and relay are employed. The Transmitter introduces an audio signal of a specific assigned carrier frequency and modulation rate into the track through two wires connected directly to the rails. The point at which the wires are connected defines one end of the track circuit.

The AFO-IIC Receiver only responds to a specific assigned frequency. The receiver is also connected to the rails with two wires and this point defines the other end of the AFO-IIC track circuit. Upon receiving the proper frequency, the receiver detects, amplifies and rectifies the signal to provide an output to operate the external relay. The contacts of the relay are then employed in the same fashion as conventional track relay contacts.

In addition to the Transmitter and Receiver, the electrified territory AFO-IIC product family includes:

- Track Coupling Units
- Wayside Coupling Equipment for long transmitter cable lengths

The Track Coupling unit is used when the AFO signal must be passed around insulated joints, and the existing track circuit energy must be blocked. This unit uses transformer coupling to pass the AFO-IIC signal to the next track section. Redundant blocking of DC passage is accomplished in the Coupling Unit by both transformer and the series components to ensure system vitality. AFO-IIC Cable Coupling equipment is used when the track circuit application requires a cable length between transmitter and track greater than 150 feet.

Advantages

- Permits AFO track circuit use in dc-electrified territories
- Versatile – multiple frequencies between 870 and 2400 Hz
- Immune to electrified territory EMI effects
- Requires no insulated joints
- Compatible with motion detectors, dc circuits, other AFO
- Track Coupling Units available to pass signals around insulated joints
- Cable Coupling equipment allows long-distance connections

Product Designs

Transmitter and Receiver

All circuitry in the AFO-IIC Transmitter and Receiver use printed circuit board construction. PC boards are hard-wired in a sheet steel housing designed for shelf/wall or rack mounting with AREMA terminal strips (for circuit connections).

The AFO-IIC Transmitter has a fixed output. The transmitter will operate on a DC battery voltage range of 9.5 to 16.2 volts. The modulated signal provides noise immunity of the circuit and reduces battery consumption by the transmitter.

Surge protection is provided within the AFO-IIC Receiver and Transmitter for both the dc line and track lead inputs. Reverse polarity protection is also included. If battery polarity is accidentally reversed, a protection fuse will blow, disconnecting the unit from the battery power supply (to prevent standby power loss and protect other equipment).

UNION SWITCH & SIGNAL

RSE-3B2
Rev. 7-03

AFO-IIC Track Circuit
Electrified Territory Application

Typical AFO-IIC Circuit Application

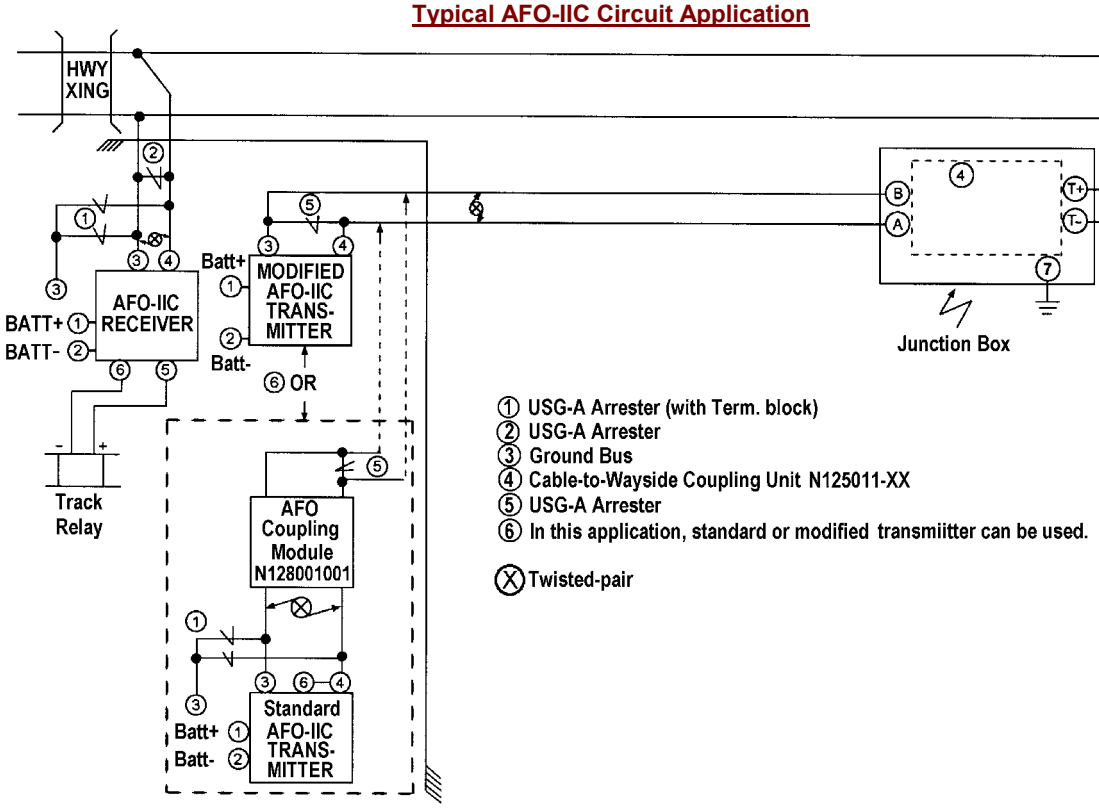

Product Designs (cont'd)

Track Coupling Unit

Two AFO-IIC Track Coupling Units are available. One is adjustable to pass each of six distinct frequencies, while the other is adjustable to pass one of four frequencies. The units have tuned taps for each frequency in its group. Since each unit has tuned taps for each frequency in its class, one unit is required for each frequency to be passed around the insulated joints. The frequency-determining taps are located inside the unit and are connected to the proper taps as determined by the selected operating frequency.

The Track Coupling Unit has the same dimensions and utilizes the same housing for shelf/wall or rack mounting, as the AFO-IIC Receiver and Transmitter.

Cable-to-Wayside Coupling Equipment

The AFO-IIC Coupling Module is provided in different frequencies (see ordering tab.). This unit is provided in a DIN rail-mountable enclosure with step-up transformer and voltage suppressor (PC board-mounted). These units are located by the Transmitters.

The associated Cable Coupling Unit consists of a PCB combined with high and low-voltage arresters, all assembled on a stainless steel panel. The PCB contains a step-down transformer as well as resonant output circuit.

The unit was designed without regard to a particular junction box, which allows customization with in-house designs. Contact US&S for further design options.

Application Notes

The electrified territory AFO-IIC track circuit provides train detection without the need for insulated rail joints. It can be used for highway crossing application or as continuous train detection in signal systems. The AFO-IIC is sine wave modulated to provide a high degree of immunity to noise in the rails. This feature also minimizes the equipment from interfering with other electronic equipment connected to the same rails.

Electrified territory AFO-IIC track circuits can be overlaid on 60 or 100 Hz track circuits, however because of loading effects, precautions must be taken when the track circuit feed falls within a certain distance from either an AFO transmitter or receiver. The effects of the AC track circuit equipment loading on the AFO equipment can be minimized.

Motion monitors can be successfully used with the electrified territory AFO track circuit equipment provided certain precautions are taken with respect to the interactions of their harmonics and mixes of the 60 or 100 Hz track circuit signals.

AFO-IIC Track Circuit
Electrified Territory Application

UNION SWITCH & SIGNAL

RSE-3B2
Rev. 7-03

Specifications

AFO-IIC Transmitter

Input Voltage:	9.5 to 16.2 Vdc
Input Current:	With 2 ohm output load: Full output = 1.8A @ 12V input. Tapped output = 1.4A @ 12V input With 1.5 ohm output load: Full output = 10.1 V P-P during "on" period of modulation. Tapped output = 8.2V P-P during "on" period of modulation.
Output Impedance:	1.25 ohms
Operating Frequencies:	See ordering tab.
Operating Temperature:	-40°C to +71°C
Surge Protection:	Built-in
Ballast Resistance:	3 ohms/1000 ft. (min.)
Unit Dimensions:	8"H x 6-1/8"W
Unit Weight:	7 lbs., 11 oz.

AFO-IIC Receiver

Input Voltage:	9.5 to 16.2 Vdc
Input Current:	0.07A @12 Vdc
Output Voltage:	5.5 Vdc (min.) with input signal set to specified receiver sensitivity and 9.5 V battery.
Signal Sensitivity:	15 to 60 mV minimum detectable signal (measured with modulator off), carrier freq. dependent
Input Impedance (Track):	1.25 ohm at center of assigned freq. (nom.)
Output Load:	400 or 500 ohm relay (US&S PN-150BH or DN-22BH)
Bandwidth:	-3 dB @ +4.0% of assigned freq.
Operating Frequencies:	See ordering tab.
Operating Temperature:	-40°C to +71°C
Surge Protection:	Built-in
Unit Dimensions:	8"H x 6-1/8"W
Unit Weight:	8 lbs., 10 oz.

Ordering Information

- Refer to ordering tabulations for standard AFO-IIC and auxiliary equipment order numbers
- If an AFO-IIC unit with a different operating frequency (than those listed) is required, contact US&S to request frequency in place of unit order numbers.

	AFO-IIC Transmitters	
US&S Order No.	Carrier Freq. (Hz)	Carrier Mod. (Hz)
N12502501	870	18
N12502502	945	18
N12502503	980	22
N12502504	1180	22
N12502505	1215	22
N12502506	1285	27
N12502507	1520	27
N12502508	1660	27
N12502509	1945	39
N12502510	2365	49

- To order related track circuit equipment:
  - Refer to ***RSE-4G2*** for PN-150BH relay (other types may be required depending upon application).
  - Refer to ***RSE-3H1*** for Surge Ripple Filter
  - Refer to ***RSE-3H3*** for USGA lightning arresters.
- Request US&S Service Manual 6414 for AFO-IIC components.

Transmitter Unit

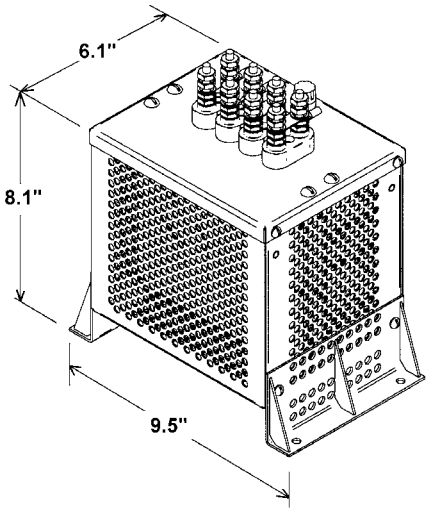

UNION SWITCH & SIGNAL

RSE-3B2
Rev. 7-03

AFO-IIC Track Circuit
Electrified Territory Application

	AFO-IIC Receivers	
US&S Order No.	Carrier Freq. (Hz)	Carrier Mod. (Hz)
N4510523145	870	18
N4510523146	945	18
N4510523147	980	22
N4510523148	1180	22
N4510523149	1215	22
N4510523150	1285	27
N4510523151	1520	27
N4510523152	1660	27
N4510523157	1945	39
N4510523158	2365	49

Receiver Unit*

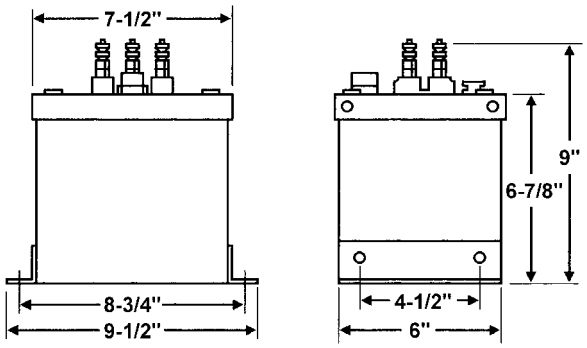

*Dimensions also applie to Track Coupling Unit

	Track Coupling Units
US&S Order No.	Carrier Frequencies (Hz)
N4510521903	870, 980, 1180, 1285, 1660, 1945
N4510521904	945, 1215, 2365

	AFO-IIC Wayside Cable Coupling Equipment
US&S Order No.	
N12800101	Cable Coupling Module - Sig. Room
N37500605	Cable Coupling Module - Wayside
N12501101	Cable-to-Wayside C-Unit (870 Hz)
N12501102	Cable-to-Wayside C-Unit (945 Hz)
N12501103	Cable-to-Wayside C-Unit (980 Hz)
N12501104	Cable-to-Wayside C-Unit (1180 Hz)
N12501105	Cable-to-Wayside C-Unit (1215 Hz)
N12501106	Cable-to-Wayside C-Unit (1285 Hz)
N12501107	Cable-to-Wayside C-Unit (1520 Hz)
N12501108	Cable-to-Wayside C-Unit (1660 Hz)
N12501109	Cable-to-Wayside C-Unit (1945 Hz)
N12501110	Cable-to-Wayside C-Unit (2365 Hz)

AFO Coupling Module

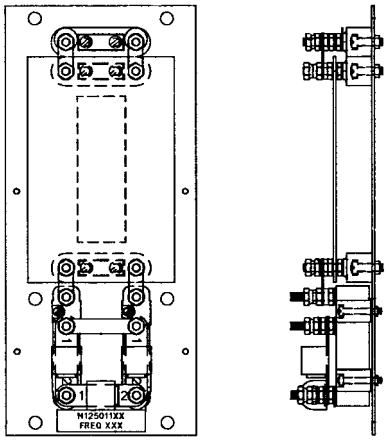

Cable-to-Wayside Coupling Unit

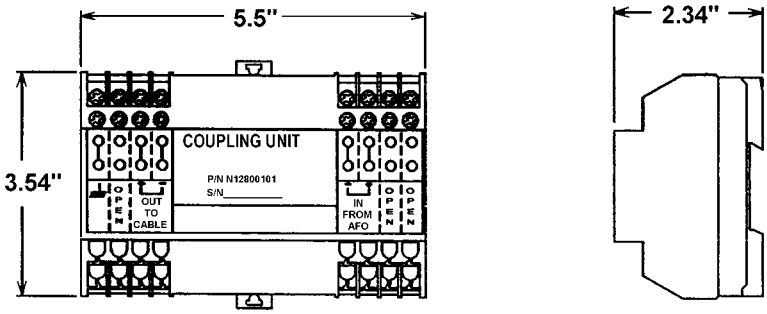

UNION SWITCH & SIGNAL

RSE-3B3
Rev. 7-03

ATT-20 Audio Track Transceiver

The ATT-20 Audio Track Transceiver is a highly reliable AF track circuit device that operates in the audio frequency range of 12 to 20 KHz. This high AF range helps provides sharp block definition in applications such as highway crossings, island circuits, switch lock release and general train detection.



General Description

The ATT-20 is provided in two specific units, the Series Mode unit and the Shunt Mode unit. In the Shunt Mode application, the transmitter output and receiver input are connected by cable directly to the rails. The connection is made through surge protectors by twisted line pair wires. The point at which the transmitter wires are connected defines one end of the track circuit, while the other end of the track circuit is defined by the receiver connections to the track. The receiver detects the presence of a train by the loss of the audio frequency signal that is shunted away by the train axle.

In the Series Mode application, the transmitter and receiver are wired in sequence via a jumper on the ATT-20 unit. This jumper connects a transmitter output to a receiver input terminal. The remaining transmitter output lead and the remaining receiver lead are twisted as a pair and each is connected to its respective rail. The presence of a train axle across the rails completes the series signal path, thus detecting the approach of a train.

Unlike previous ATT series units, the ATT-20 can be used in both non-electrified and dc-electrified territories. It is also less susceptible to sources of EMI such as hand-held radios. In most applications insulated joints are not required and track circuits up to 300 feet long can be realized. The series mode version of the ATT-20 has reduced sensitivity to changes in ballast conditions compared to previous ATT models. The ATT-20 is provided in two specific units, the Series Mode unit and the Shunt Mode unit. Neither unit can be used for the alternate application. On the shunt mode unit, the front cover contains an access hole for adjusting the relay operating voltage level (transmitter output).

Advantages

- Ideal for short range applications
- Electrified or non-electrified territories
- Low susceptibility to EMI and ballast effects

Application Notes

ATT-20 may be ordered as a direct replacement for the ATT-10. However, make certain to order either the Shunt Mode or Series Mode version of the ATT-20 to-replace the corresponding application of the ATT-10. The Series and Shunt Mode versions of the ATT-20 are not interchangeable in their application.

Specifications

Power Supply

P.S. Voltage:	9.8 - 15.2 Vdc
Ripple:	1 V P-P (max.)
Load Current:	600 mA
Fuse:	0.75A fast-blow
Req'd P.S. Filter:	US&S Surge Ripple Filter N451590-0301

Transmitter

Shunt Mode Output V:	1.0 V RMS (modulated) into 5 ohm load
Series Mode Output V:	0.25 V RMS (modulated) into 1 ohm load
Available Op. Freq.:	12.28 KHz, 15.0 KHz, 20 KHz
Carrier Freq.:	Tolerance: ±5%

UNION SWITCH & SIGNAL

ATT-20 Audio Track Transceiver

RSE-3B3
Rev. 7-03

Specifications (cont'd)

Mod. Freq. (All Units):	390 Hz: ±0.5%
Harmonic Output:	-30 db @ 2nd harmonic w/12 ohm load in shunt mode
Output & Input Imped,:	7 ohms - shunt mode, 1 ohm - series mode
Output Voltage:	7.65 Vdc into 400 ohms

Miscellaneous

Reverse Batt. Protection:	Built in
Operating Temp. Range:	-40°C to + 70°C
Maximum Block Length:	300 ft. shunt mode @3 ohms/1000 ft. ballast 150 ft. series mode @ 3 ohms/1000 ft. ballast
Unit Weight:	4 lbs./14 oz.

ATT-20 Unit Dimensions

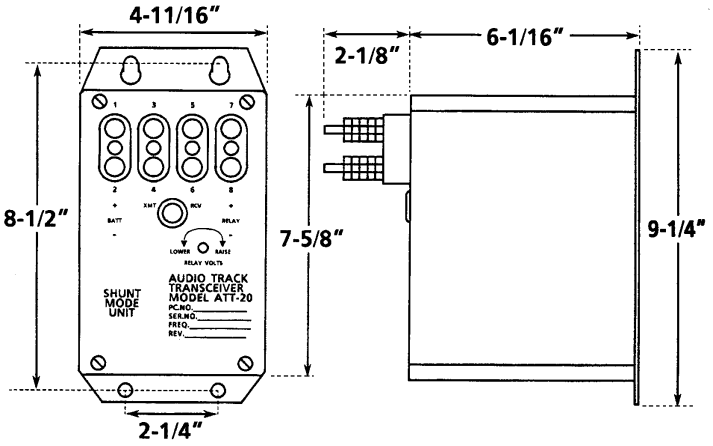

ATT-20 Shunt Mode Application

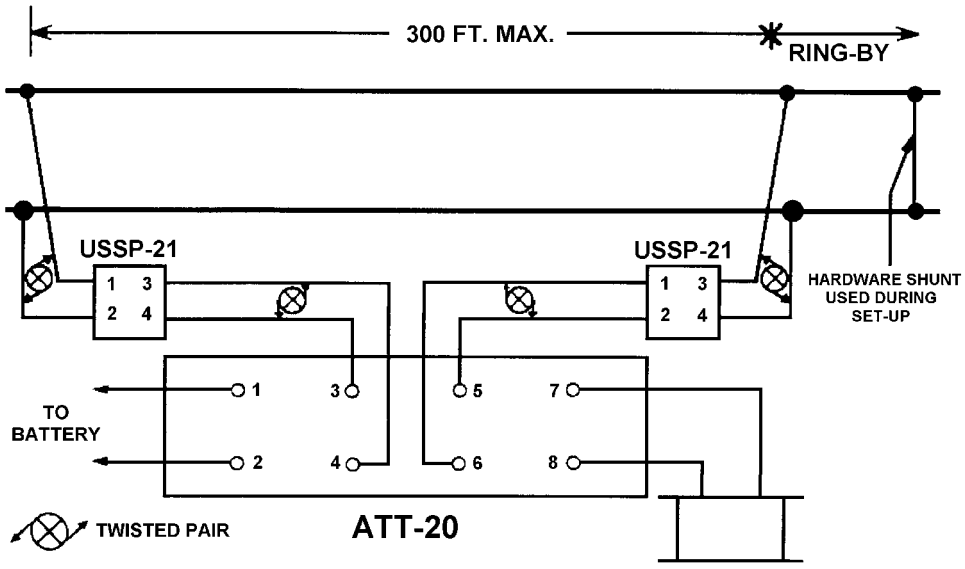

ATT-20 Audio Track Transceiver

UNION SWITCH & SIGNAL

RSE-3B3
Rev. 7-03

ATT-20 Series Mode Application

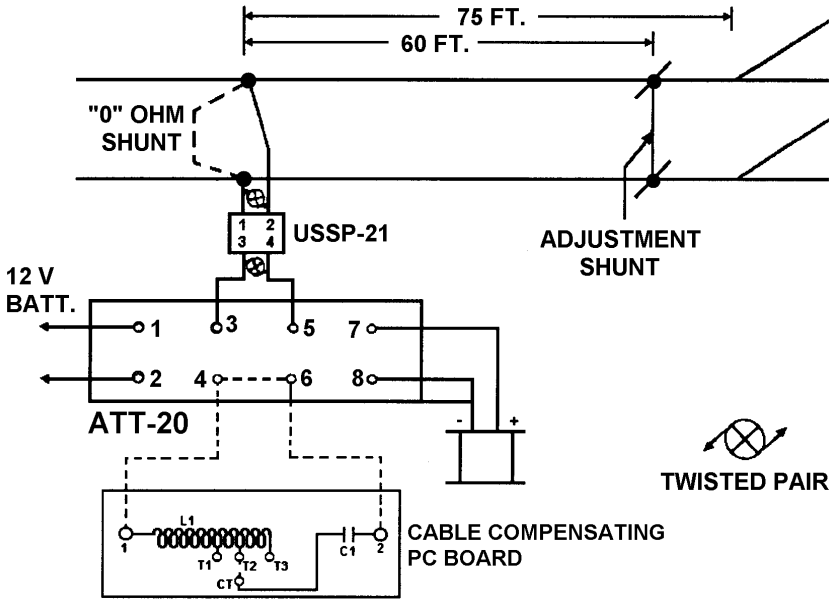

Ordering Information

- Refer to ordering tabulation below for standard ATT-20 part numbers.
- Refer to ***RSE-3H1*** to order Surge Ripple Filter.
- Request US&S Service Manual 6299 for ATT-20 replacement parts.

	ATT-20 Units	
US&S Order No.	Frequency (kHz)	Application
N4510523901	12.8	Shunt
N4510523902	15.0	Shunt
N4510523903	20.0	Shunt
N4510523904	12.28	Series
N4510523905	15.0	Series
N4510523906	20.0	Series

UNION SWITCH & SIGNAL

Wayside Products

UNION SWITCH & SIGNAL

RSE-3C1
Rev. 7-03

TRU-II Track Resonant Unit and Code Reset Unit

TRU-II is 2-element track resonant unit for steady energy track circuit application in 25 Hz or 60 Hz ac propulsion territory. It serves a direct replacement for existing centrifugal relays. The TRU-II Code Reset Unit adapts the TRU-II Track Circuit to single or double-direction code overlay track circuit applications by resetting the coded track signal to the desired steady energy condition.



TRU-II Code Reset Unit

General Description

TRU-II Track Resonsant Unit

The TRU-II Track Circuit Unit is provided in three basic models:

- 100 Hz-only unit
- Combination 91.67/100 Hz unit set to 91.67 Hz
- Combination 91.67/100 Hz unit set to 100 Hz.

The second and third models are set at the factory to the indicated frequencies, but can be changed in the field to the alternate frequency. This is done by changing taps, allowing easy track circuit conversion when changing from 25 to 60 Hz propulsion systems. A reversible label on the unit shows either selected frequency. In operation, the TRU-II Track Circuit Unit energizes its track (output) relay so long as the track circuit is unoccupied and operating property. Track occupancy or a system failure causes TRU-II to release the track relay.

TRU-II Advantages

- Direct replacement for centrifugal relays
- 25 or 60 Hz propulsion, dc territory
- High level lightning, surge protection
- Track circuit length, shunting constraints and broken down insulated joint protection comparable to phase selective and centrifugal relay systems; minimal field retrofit work required to replace centrifugal relay
- Lower power consumption than centrifugal relays

TRU-II Advantages (cont'd)

- Excellent noise rejection capability
- No active electronics, no moving parts
- No periodic maintenance required
- Rack or shelf-mount; plug couplers for easy replacement

TRU-II Code Reset Unit

In a code overlay application, the TRU-II Code Reset Unit is connected in parallel to the TRU-II Track Circuit output and assists the energizing of the track relay during the code reset period. The degree of assist is proportional to the steady state TRU-II output during the reset.

Code Reset Unit Advantages

- Code Reset: Single or double-direction code overlay
- No track circuit voltage boost required during code reset period
- Guards against false relay pick-up
- Operates on 25 Hz or 60 Hz propulsion systems
- Provides high degree of lighting protection
- Durable design-no transistors or electrolytic capacitors
- No periodic maintenance required
- Rack of shelf-mount; plug couplers for easy replacement

UNION SWITCH & SIGNAL

TRU-II Track Resonant Unit and Code Reset Unit

RSE-3C1
Rev. 7-03

Specifications

TRU-II Track Resonant Unit

Local Voltage:	110 or 120 Vac ±10%
Local Current:	50 mA range
Track Voltage:	10 Vac range
Track Current:	100 mA range
Breakdown Voltage:	3000 V, 60 Hz for 1 minute
Operating Temp. Range:	-40° to + 70°C
Tract. Pwr. Environment:	DC to 60 Hz AC
Harmonic Immunity:	91.67 Hz unit immune to 100 Hz (4th harmonic of 25 Hz traction power)

Code Reset Unit

Local Voltage:	110 or 120 Vac, +10%
Local Current:	50 mA range-with required external 1 K noise suppression resistor, 165 mA range.
Breakdown Voltage:	3000 V, 60 Hz for 1 minute on terminals 1 and 2 to chassis onlyOperating Temp. Range: -40° +70°C
Tract. Pwr. Environment:	DC to 60 Hz AC
Harmonic Immunity:	91.67 Hz unit immune to 100 Hz (4th harmonic of 25 Hz traction power)
Code Rate:	180 code (max.)
Coder On/Off Time:	38% (min.)

Ordering Information

- Refer to ordering tabulation for TRU-II and Code Reset Unit part numbers
- Refer to these RSE catalog cuts for TRU-II related units:
  - ***RSE-4G2***: PN-150BH relay (TRU-II track relay)
  - ***RSE-4E1***: PN-150B relay (TRU-II repeater relay)
  - ***RSE-4E4***: PN-250B relay (TRU-II repeater relay).
- Contact your US&S Sales Representative to order special TRU-II components and configurations not listed in this catalog section.
- Request US&S Service Manuals 6236 (TRU-II) and SM-6237 (Code Reset) for replacement parts.

	TRU-II Track Circuit Units and Mtg. Hardware		
US&S Order No.	Freq. Options	Operating	Mtg. Hardware
N4512060108	100 Hz	100 Hz	--
N4512060109	100 Hz	100 Hz	X
N4512060110	91.67/100 Hz	91.67 Hz	--
N4512060111	91.67/100 Hz	91.67 Hz	X
N4512060112	91.67/100 Hz	100 Hz	--
N4512060113	91.67/100 Hz	100 Hz	X
X4512060114	Track Circuit Unit - Mounting Hardware Kit		

	Code Reset Unit and Mtg. Hardware
US&S Order No.	
N4512060401	Code Reset Unit
N4512060402	Code Reset Unit w/mtg. Hardware

TRU-II Track Resonant Unit and Code Reset Unit

UNION SWITCH & SIGNAL

RSE-3C1
Rev. 7-03

Typical Circuit Application

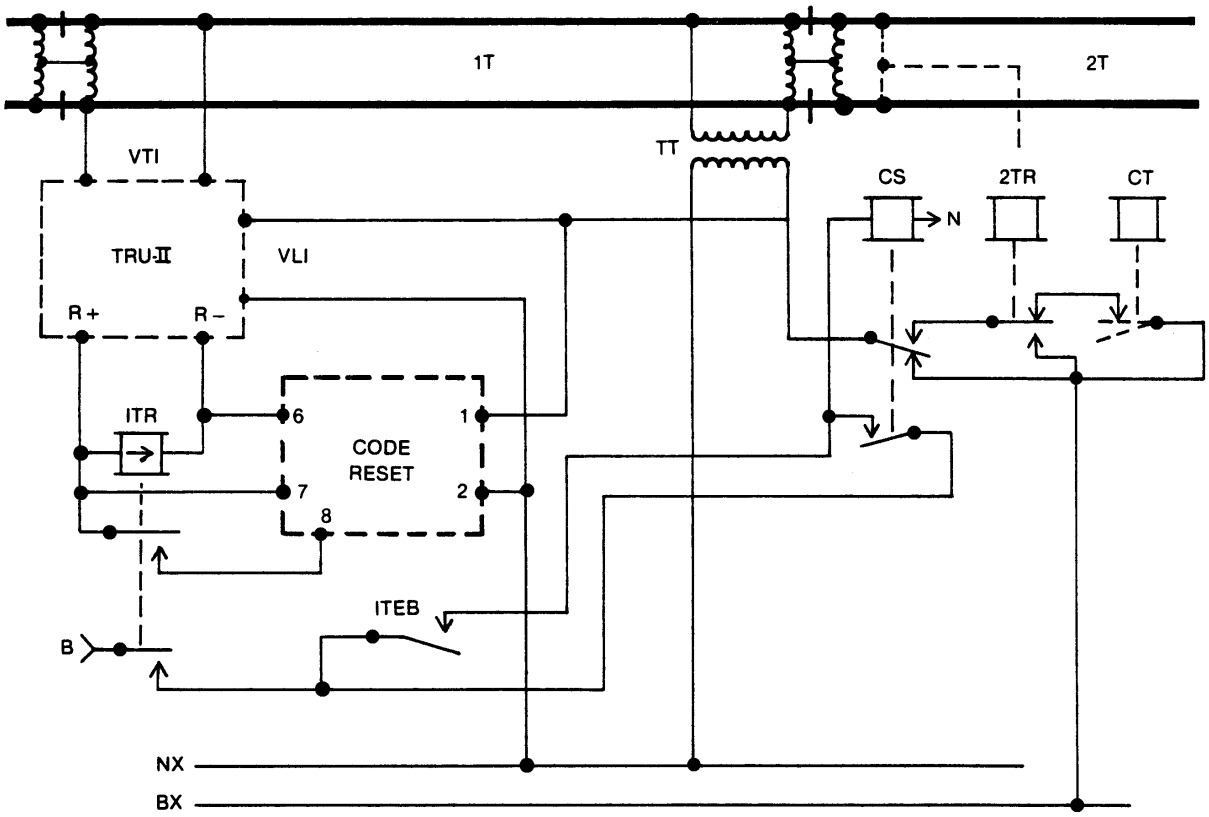

UNION SWITCH & SIGNAL

Wayside Products

UNION SWITCH & SIGNAL

RSE-3C2
Rev. 7-03

Phase-Selective Unit (PSU)

US&S' 91.67-100 Hz Phase Selective Unit (PSU) is a highly reliable device for driving code-following relays in power frequency track circuits. It eliminates the need for line wires and/or signal cables, and directly replaces the larger, more expensive centrifugal vane relays used in this application. The PSU is also more immune to traction current than centrifugal relays.



General Description

The Phase-Selective Unit may be employed in 25 or 60 Hz propulsion territories and set to 91.67 or 100 Hz carrier frequency by simply changing connections on the unit's wiring terminals. The most recent PSU incorporates several improvements over older models. These include better internal stabilization of the local input voltage and an improved means of adjusting to phase angle changes that maintains tuning frequency accuracy. Adjustment is done by adding capacitance in series with the primary of the local transformer. Four capacitance values are available by choosing taps and changing the position of one jumper (each capacitor separately, the series combination and the parallel combination). This allows adjustment for the standard range of track circuit lengths (100 ft. to 6000 ft.).

Advantages

- Code-following relay drive in power frequency track circuits
- Eliminates centrifugal vane relays, line wires, signal cables
- Cab signal compatible, works with wide range of code rates

Specifications

Local Voltage:	20 Vac RMS ±5%
Operating Frequency:	91.67 Hz or 100 Hz
Dielectric Breakdown:	3000V, 60 Hz for 1 min.
Temperature Range:	-40°C to + 70°C
Mounting:	Rack, shelf or wall.

Ordering Information

- Refer to ordering tabulation for Phase Selective Unit part numbers
- Refer to these RSE catalog sections for Phase-Selective related units:
  - ***RSE-3E1***: W-400 Transformer
  - ***RSE-4M2***: PC-250P plug-in relays N32559-014, N322559-018
- Request US&S Service Manual 6147 for replacement parts.

	PSU
US&S Order No.	
N4515900101	91.67/100 Hz Phase-Selective Unit

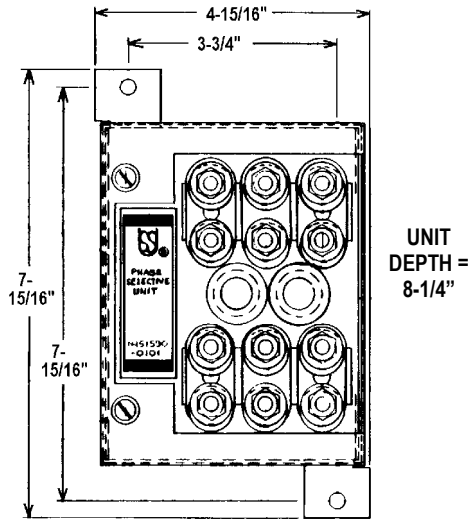

UNION SWITCH & SIGNAL

Phase-Selective Unit

RSE-3C2
Rev. 7-03

Typical 100 Hz Track Circuit Application

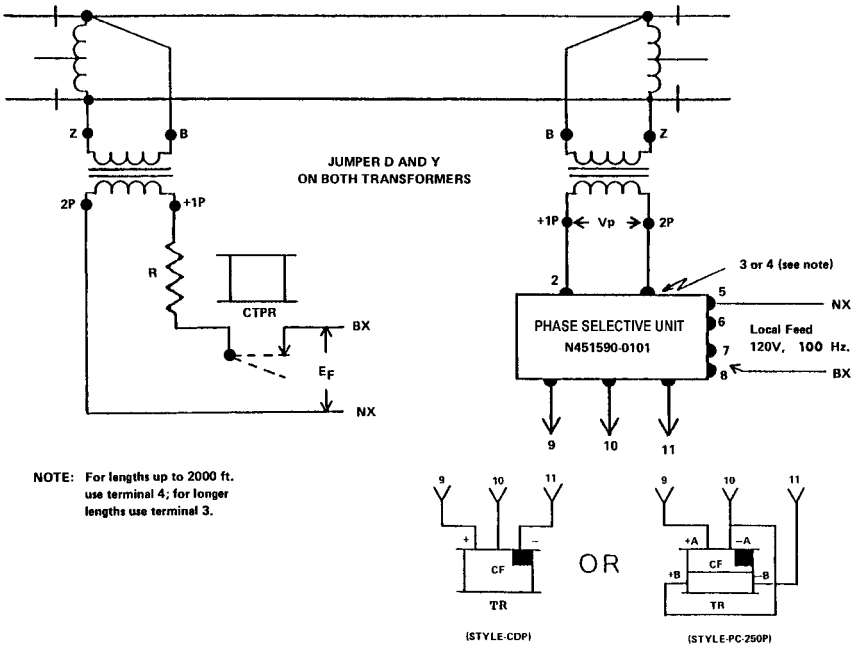

Typical 91-2/3 Hz Track Circuit Application

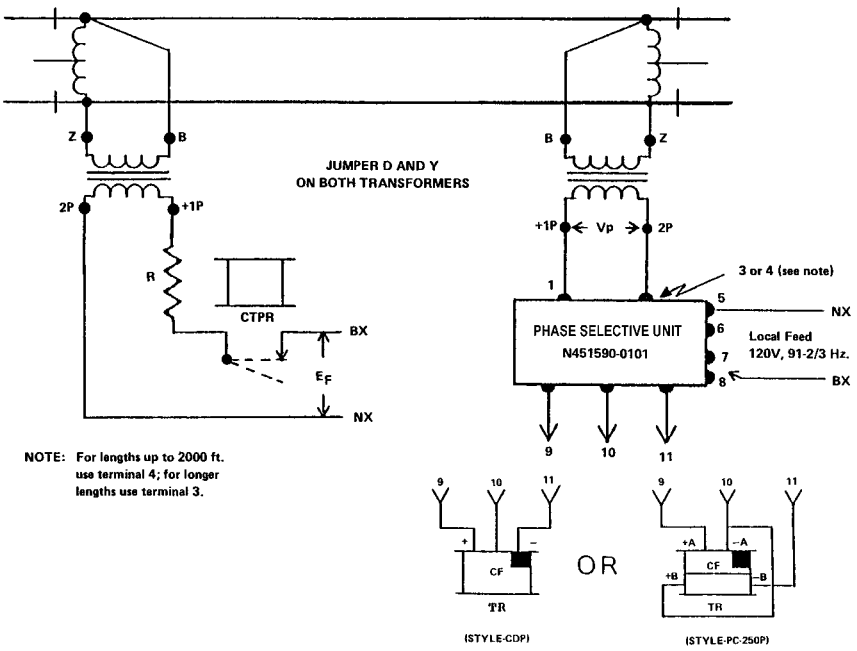

Wayside Products

UNION SWITCH & SIGNAL

RSE-3D1
Rev. 7-03

EM-1 Automatic Train Stop

The EM-1 Automatic Train Stop, which interacts with carborne vehicle control equipment, provides an effective means of activating the train braking mechanism in the event restrictive signals are ignored.



General Description

The key component of the EM-1 is a driving trip arm, which is normally pulled, under power, to the clear position 1/2" below top of running rail. If power is interrupted to the unit, a compression spring moves the trip arm back above the rail. With the car-carried equipment in a position to react with the EM-1, the trip arm will engage the brake trip air cock on the passing train. Assuming all equipment is functioning properly, this event will initiate a train-stopping sequence. The EM-1 Train Stop is installed on mounting plates midway between the rails. The rocker shaft may be fastened for either right or left operation, as required. Spline or universal coupling is available at the rocker shaft connection to the unit. Selected units are equipped with a heater for operation in cold weather areas. Refer to the ordering tabulation for additional design characteristics and specifications.

Advantages

- Assured Emergency Braking For Trains
- Right or Left-Hand Layout

Specifications

Frequency:	60 Hz
Tripper Arm Capacitor Set:	20-20 mFd
Tripper Arm Height Over Rail:	2-1/2" to 3"
Current At Normal Voltage:	In-rush: 1.42A
	Holding: 0.73A

Ordering Information

- Refer to ordering tabulation for EM-1 part numbers.
- Please take careful note equipment characteristics when placing order.
- Request US&S Service Manual 5730 for replacement parts.

	EM-1 Automatic Train Stops	
US&S Order No.	Heater	Coupling
N387658001	--	Spline
N388403	X	Universal (R.H.)

See reverse side for design and installation details.

UNION SWITCH & SIGNAL

EM-1 Automatic Train Stop

RSE-3D1
Rev. 7-03

EM-1 Unit Design

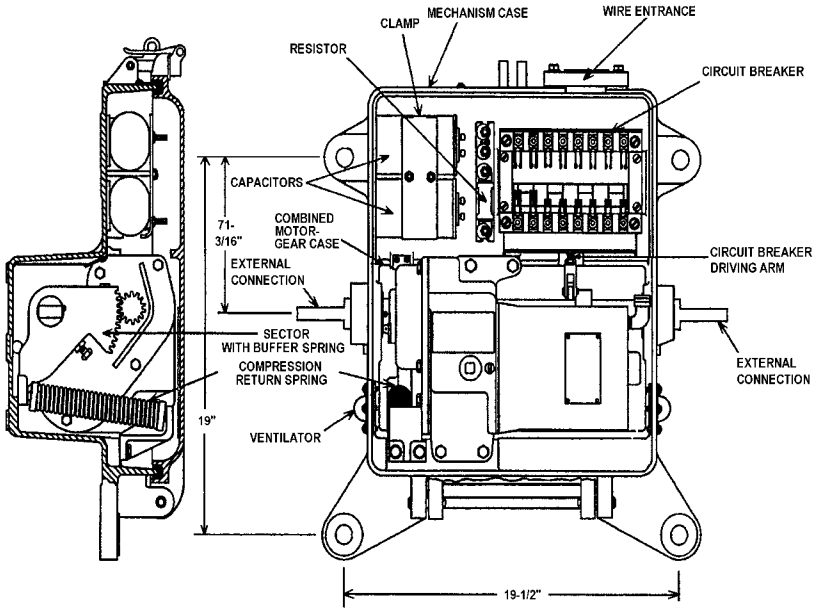

EM-1 Unit Typical Layout

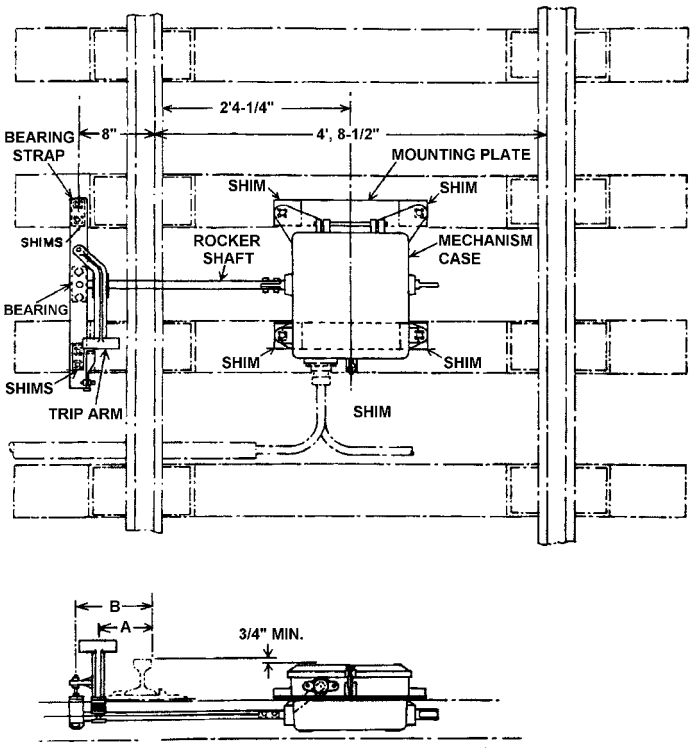

UNION SWITCH & SIGNAL

RSE-3D2
Rev. 7-03

Style “S” Electro-Mechanical Train Stop

US&S’ Style “S” Electro-Pneumatic (EP) Train Stop helps insure that a passing train does not continue moving (if a restrictive cab signal aspect is ignored) by tripping an air release valve on the train. The EP stop is designed for pneumatically operated wayside installations.

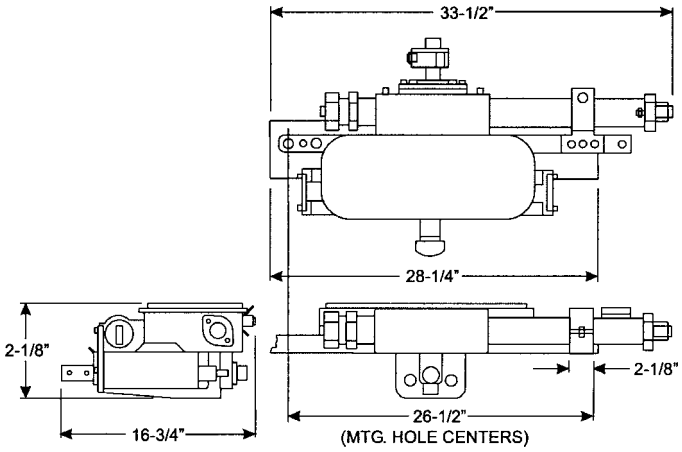

General Description

It employs a helical coil spring for forcing the tripper arm to the stop position. The mechanism drives the tripper arm to the clear position with a minimum of 60 PSI applied air pressure. An air pressure reduction to approximately 30 PSI is sufficient to raise the arm to the full stop position, which helps assure a safe margin for operation. The unit’s outboard bearing is self-aligning to allow for mounting variations and to pre-vent binding. A coupling in the drive shaft is available with spherical bearing surfaces for centering the drive shaft with the mechanism, and to compensate for any misalignment.

The circuit controller in the EP train stop is driven by a pair of rocker arms actuated by a cam on the drive shaft. Independent contacts in the controller include 3 closed/5 open in the stop position and 5 closed/3 open in the clear position. Also, 1 independent normal and reverse contact is provided in each position (stop and clear).

Models of the EP Train Stop are available for left-hand installation only (typical), and with a shaft that allows the tripper arm to be mounted on either side of the unit.

Specifications

Operating Air Pressure:	60 PSI (min.)
Clear:	55 PSI or greater
Stop:	30 PSI or less
Tripper Arm Travel:	56° to 60°

Ordering Information

- Refer to ordering tabulation for Style “S” stop part numbers.
- Models with chain and shaft cover allow tripper arm mounting on either side.
- Request US&S Service Manual 5434 for component parts.

Advantages

- Provides reliable trip stop action
- Light weight, durable unit
- Left-hand or dual-side tripper arm options

	Style "S" Train Stops		
US&S Order No.	Conduit Port Pipe Plug	Heater	Cover Chain & Shaft Cover
N329366	X	--	--
N329366001	X	X	--
N330549	--	--	X

UNION SWITCH & SIGNAL

Style "S" Electro-Mechanical Train Stop

RSE-3D2
Rev. 7-03

Typical Track Layout with Long Shaft (see Service Manual SM-5434 for other layout options)

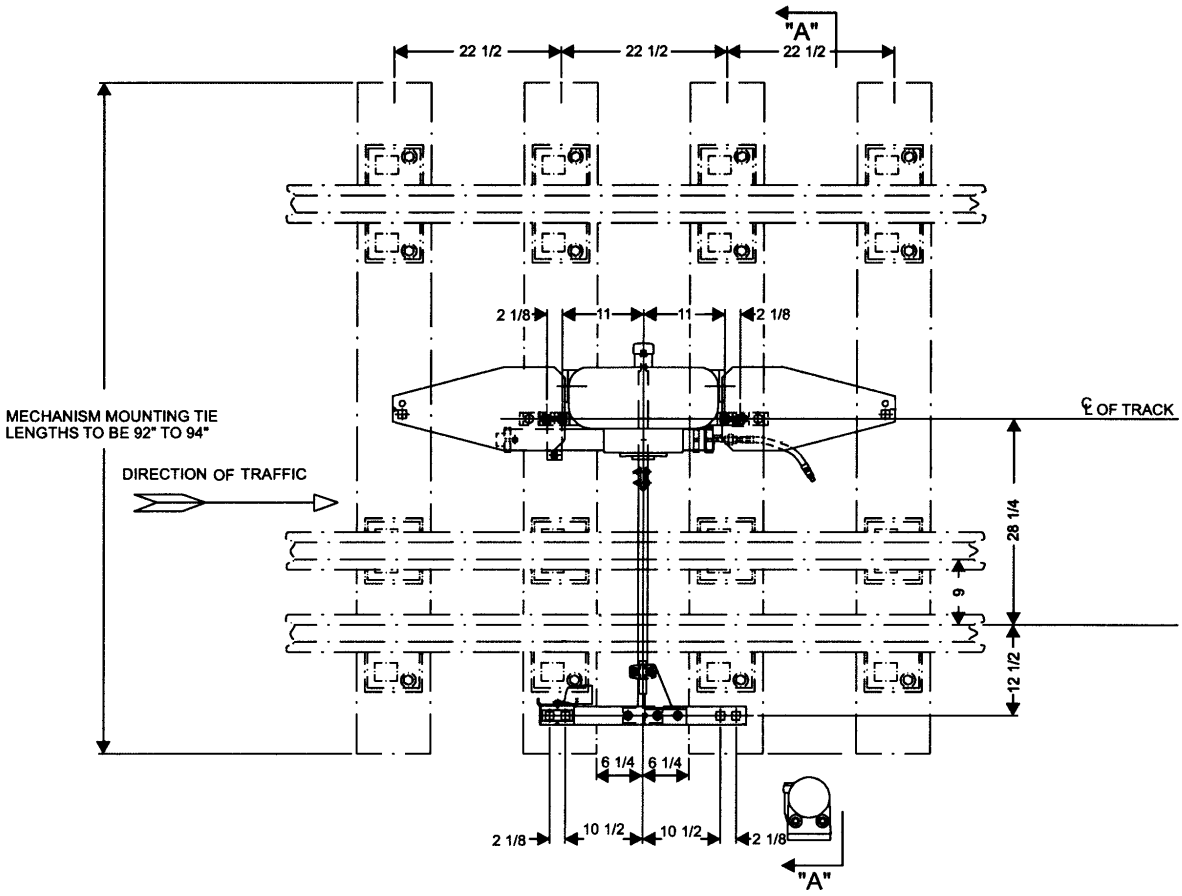

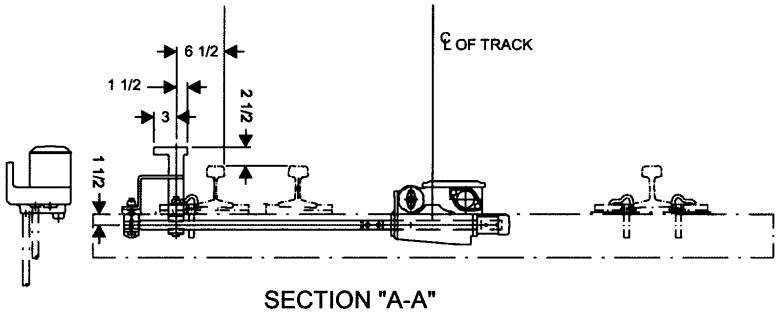

SECTION "A-A"
WITH RAMP AND TIE REMOVED

Wayside Products

UNION SWITCH & SIGNAL

RSE-3E1
Rev. 7-03

W-400 Transformer

US&S W-400 air cooled transformers are produced in a wide variety of input/output configurations to satisfy most requirements. These transformers, with improved output efficiency over earlier models, are designed for long life and can be used for track circuit feed, signal lighting and other general applications. Special application W-400 transformers are also available for decoding and indication use.



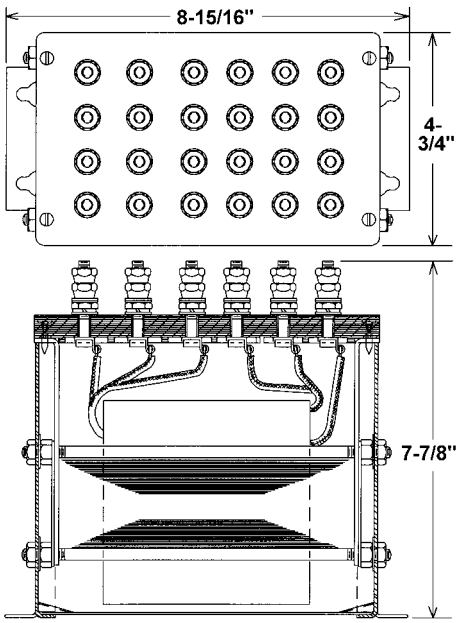

General Description

W-400 transformers are air cooled devices, consisting of a wound coil and laminations mounted in a sheet metal housing. This housing may be wall, shelf or rack-mounted. Coil leads are brought out to AREMA-standard terminal posts on a molded terminal board. This board contains all transformer application information. Both primary and secondary connections are made at the top of the transformer. The “Indication” transformer is designed for use in coded CTC systems and has one primary (two sections) and one secondary with a 0.010 inch air gap. All W-400 units incorporate insulation to withstand 3000 volts RMS, have adjustable (additive) secondary windings and meet AREMA performance standards.

Advantages

- T.C. feed, signal lighting and many other applications
- Dependable, consistent operation
- All input and output connections, circuit chart on common terminal board

Ordering Information and Specifications

- Refer to ordering tabulation for W-400 part numbers and specifications.
- Request US&S Service Manual SM-5994 for W-400 Transformer replacement parts.

US&S Order No.	Type	Primary Volt. (Vac)	Primary Freq. (Hz)	Secondaries	Secondary 1st Type	Secondary 2nd Type	Power Rating (V.A. Max.)
N36700501	Universal	120/114	60/100	1	(18V-20A)	--	366
N4514280101	Universal	120/114	60/100	1	(18V-20A)	--	360
N4514280102	Universal	120/114	60/100	2	(18V-20A)	(18V-20A)	360
N4514280103	Universal	120/114	60/100	4	2 (6V-3A)	(25V-5A)	353
N4514280104	Universal	120/114	60/100	3	(12V-12A)	(16V-12A)	380
N4514280106	Universal	240/228	60/100	2	(18V-10A)	(18V-10A)	360
N4514280108	Universal	120	60/100	2	(18V-3.5A)	(18V-3.5A)	126
N4514280109	Universal	240/228	60/100	1	(18V-20A)	2 (12V-10A)	360
N4514280110	Decoding	10 Vdc	1.25/3	--	--	--	--
N4514280111	Indication	--	--	--	--	--	--

UNION SWITCH & SIGNAL

W-400 Transformer

RSE-3E1
Rev. 7-03

W-400 Transformer Schematic Diagrams

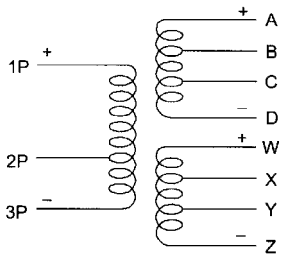

SCHEMATIC
N451428-0101

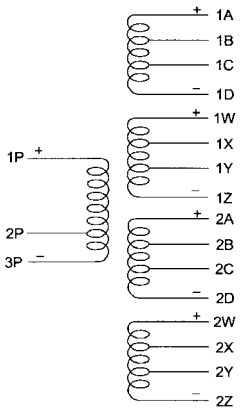

SCHEMATIC
N451428-0102

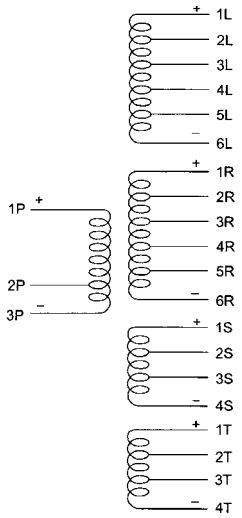

SCHEMATIC
N451428-0103

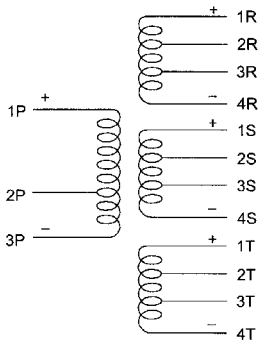

SCHEMATIC
N451428-0104

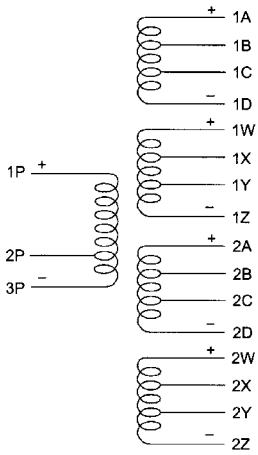

SCHEMATIC
N451428-0106

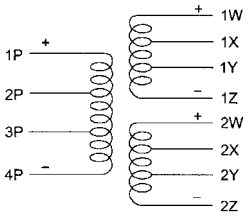

SCHEMATIC
N451428-0108

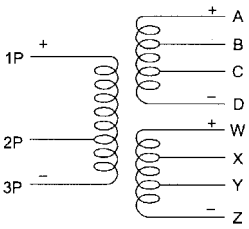

SCHEMATIC
N451428-0109

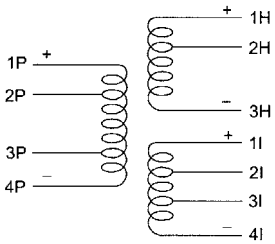

SCHEMATIC
N451428-0110

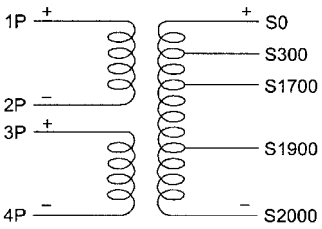

SCHEMATIC
N451428-0111

Wayside Products

UNION SWITCH & SIGNAL

RSE-3E2
Rev. 7-03

W-800 Transformers

US&S W-800 air cooled transformers are produced in a wide variety of input/output configurations to satisfy most requirements. These transformers, with improved output efficiency over earlier models, are designed for long life and can be used for track circuit feed, signal lighting and other general applications.



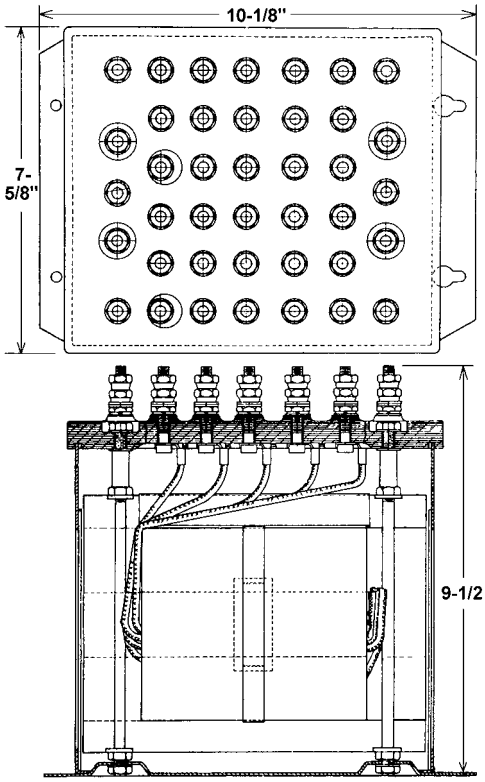

General Description

W-800 air cooled transformers supplement the W-400 transformers (see ***RSE-3E1***) in applications requiring a higher capacity. W-800 transformers are air cooled devices, consisting of a wound coil and laminations mounted in a sheet metal housing. This housing may be wall, shelf or rack-mounted. Coil leads are brought out to AREMA-standard terminal posts on a molded terminal board. This board contains all transformer application information. Both primary and secondary connections are made at the top of the transformer. All W-800 units incorporate insulation to withstand 3000 volts RMS, have adjustable (additive) secondary windings and meet AREMA performance standards.

Advantages

- T.C. feed, signal lighting and many other applications
- Dependable, consistent operation
- All input and output connections, circuit chart on common terminal board

Ordering Information and Specifications

- Refer to ordering tabulation for W-800 part numbers and specifications.
- Request US&S Service Manual SM-6007 for W-800 Transformer replacement parts.

US&S Order No.	Primary Volt. (Vac)	Primary Freq. (Hz)	Secondaries	Secondary 1st Type	Secondary 2nd Type	Power Rating (V.A. Max.)
N4514690101	120/114	60/100	2	(20V-18A)	(20V-18A)	720
N4514690102	240/228	60/100	2	(18V-20A)	(18V-20A)	720
N4514690104	120/114	60/100	4	(18.5V-10A)	3 (18.5V-10A)	740
N4514690105	240/228	60/100	3	(125V-5A)	2 (34V-1.74A)	740
N4514690106	115/100	25/100	1	(11.5V-40A)	--	460

UNION SWITCH & SIGNAL

W-800 Transformers

RSE-3E2
Rev. 7-03

W-800 Transformer Schematic Diagrams

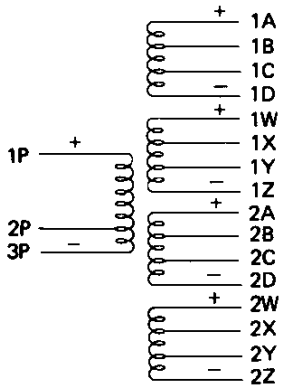

SCHEMATIC
N451469-0101

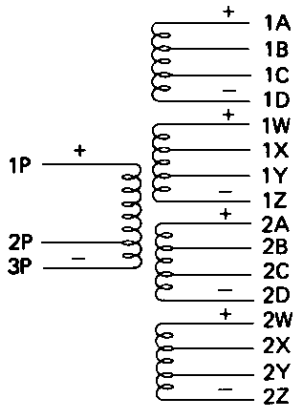

SCHEMATIC
N451469-0102

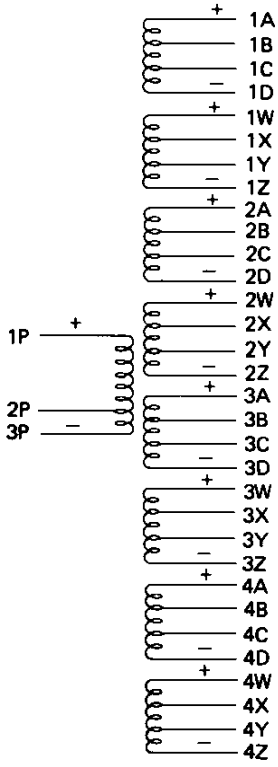

SCHEMATIC
N451469-0104

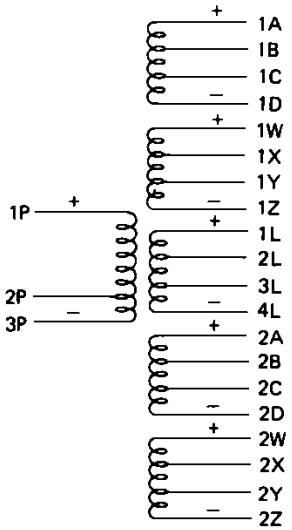

SCHEMATIC
N451469-0105

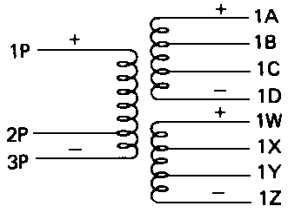

SCHEMATIC
N451469-0106

UNION SWITCH & SIGNAL

CCR Constant Current Rectifiers

US&S' CCR Constant Current Rectifiers are used for battery charging applications where a load is connected to the battery, or for floating the battery at a lower rate when the load is disconnected. These rectifiers are self-contained, full-wave devices, each containing a reactive input transformer and a full-wave diode rectifier bridge.

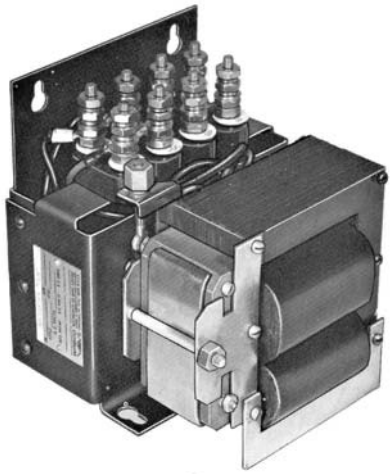

General Description

In the CCR design, a sliding core is employed to obtain optimum transformer operation and set the desired current levels. The diode-rectifier bridge is bracket-mounted and easily accessible for testing and replacement. These units use a silicon avalanche integrated bridge rectifier with built-in surge protection. The versatility of the CCR series is in the selection of transformers. Each rectifier has a specifically rated transformer to obtain a given output. All CCR rectifiers provide full rated outputs with ±10% variation in input voltage. Refer to the ordering tabulation for complete input/output voltage and current ratings.

Advantages

- Two-rate charge capability
- Modular design
- Wide selection of transformers
- Outputs with small variations in ratings

Ordering Information and Specifications

- Refer to ordering tab for CCR part numbers and specifications
- Please indicate required operating specifications and model number along with order number.
- Request US&S Service Manual SM 5951 for replacement parts.

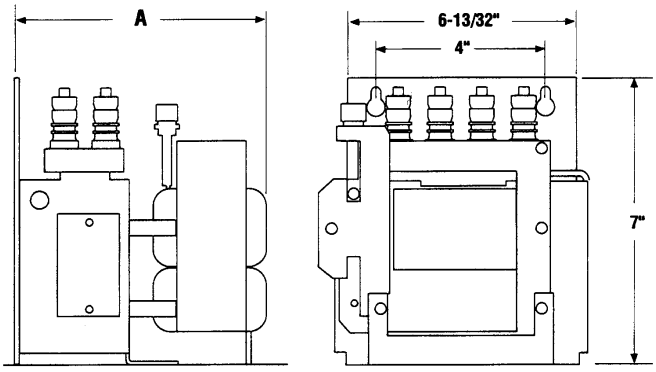

	CCR Rectifiers							
US&S Order No.	Model	Input (Vac)	Input (Hz)	Output (Vdc)	Output (Amps)	LA-Cells (1)	NI-Cells (1)	Dimen. "A"
N4513720101	CCR-4	120/140	50/60	13.5	4.4	4-6	6-9	6"
N4513720104	CCR-5	120/140	50/60	3.0	5.0	1	1-2	5-1/2"
N4513720107	CCR-6	120/140	50/60	20.0	5.0	7-9	10-13	6-1/2"
N4513720112	CCR-7	120	60/100	13.5	6.0	4-6	6-9	6-1/2"
	Note (1): Applicable battery: LA = Lead-Acid, NI = Nickel-Iron							

UNION SWITCH & SIGNAL

Wayside Products

UNION SWITCH & SIGNAL

RSE-3F2
Rev. 7-03

CPR Constant Potential Rectifiers

US&S CPR Constant Potential Rectifiers are widely used for track and line applications. They provide a wide range of operating voltages to satisfy most signal and communications requirements, and are in-tended for use with dc equipment, such as relays or other devices requiring a constant voltage source.

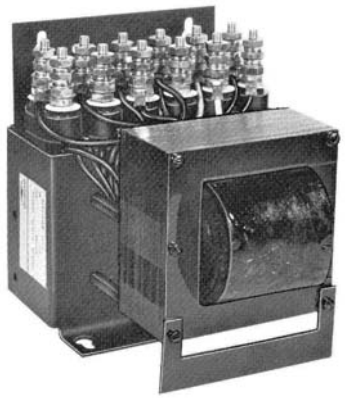

General Description

All CPR units are self-contained, full bridge rectifiers consisting of an input transformer and a silicon avalanche-integrated bridge rectifier. These rectifiers are designed for shelf or wall mounting using standard hardware. External wiring connections are made on AREMA terminal posts to enable easy removal and installation of the unit. The operating temperature range for all units is -40° +70°C (-40° +160°F). All units incorporate 3000 Vac isolation between input to output chassis.

Series CPR-1 Rectifiers are suitable for low power applications up to 7 watts load. Series CPR-2, -3, -4, and -6 Rectifiers are designed for loads up to 120 watts, while CPR-10 Rectifier is designed for loads up to 247 watts. CPR units are not designed for battery charging applications. Refer to the ordering tabulations for additional specifications.

Advantages

- Ideal for track and line applications
- Adjustable output voltage on selected units
- High efficiency operation

CPR-1 Rectifiers

This rectifier is enclosed in a sheet metal housing, which is fastened with two bolts to a main rectifier chassis. This housing is designed to keep dirt and debris away from the chassis. The diode rectifier bridge is mounted at the bottom center of the chassis, with the transformer directly above it.

CPR-2, CPR-3, CPR-4, CPR-6 Rectifiers

These rectifiers have modular construction. The diode rectifier bridge is bracket-mounted and easily accessible for testing and replacement. Output voltage is adjustable over a wide range of settings by top changing of transformer windings. The terminal block is mounted above the diode rectifier bridge, while the transformer is mounted on sleeve spacers perpendicular to the terminal board.

The versatility of this series of rectifiers is in its selection of transformers to obtain the desired operating characteristics. Each rectifier has a transformer with a specific rating, corresponding to the output. The diode rectifier bridge is standard in all units.

CPR-10 Rectifier

On this rectifier, the input transformer and rectifier assembly are mounted on a wrap-around frame, which can also serve as a wall-mount bracket. A separate bracket for shelf mounting is attached to the front of the unit. All circuit wiring is brought out to terminals on the top of the assembly. Different output voltages are created by making circuit changes on these terminals. Circuit changes to accommodate two input voltages are also made on these terminals.

Ordering Information and Specifications

- Refer to ordering tab on reverse side for CPR part numbers and specifications
- Please indicate required operating specifications and model number along with order number.
- Request US&S Service Manual SM 5952 for replacement parts.

UNION SWITCH & SIGNAL

CPR Constant Potential Rectifiers

RSE-3F2
Rev. 7-03

Specifications and Ordering Information

	CPR Rectifiers						
US&S Order No.	Model	Input (Vac)	Input (Hz)	Output (Vdc)	Output (Amps)	Dimen. "A"	Notes
N4513720303	CPR-1	15.0	25/100	12.0	0.10	4-23/32"	--
N4513720304	CPR-1	110.0	25/100	12.0	0.10	4-31/32"	--
N4513720305	CPR-1	110.0	60/100	16.0	0.10	4-31/32"	--
N4513720306	CPR-1	1.44	60	4.0	0.20	4-29/32"	--
N4513720307	CPR-1	9.2	25/100	13.0	0.50	5-11/32"	--
N4513720310	CPR-1	115.0	60/100	16.0	0.20	5-11/32"	--
N4513720501	CPR-4	115/120	60/100	10.0-18.0	4.0	6-27/32"	(1)
N4513720502	CPR-3	110/115	25/100	10.0-17.5	3.0	7-11/32"	(1)
N4513720503	CPR-2	110/115	50/100	27.0-60.0	2.0	7-11/32"	(2)
N4513720504	CPR-6	115/120	50/100	12.5-20.0	6.5	7-11/32"	(3)
N4513720505	CPR-10	120/114	60/100	10.0-16.5	15.0	--	(1)
	Note (1): Adjustable in 0.5 volt steps. Note (2): Adjustable in 2.0 volt steps. Note (3): Adjustable in 0.8 volt steps.						

Unit Dimensions

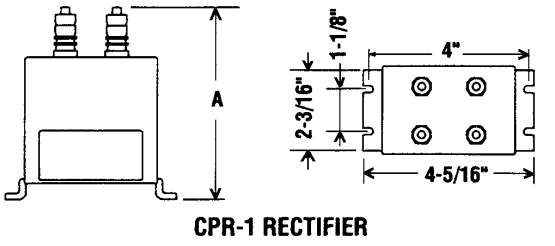

CPR-1 RECTIFIER

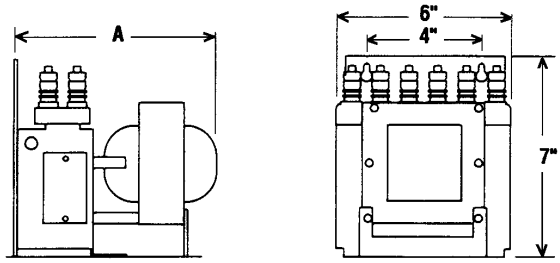

CPR-2, -3, AND -6 RECTIFIERS

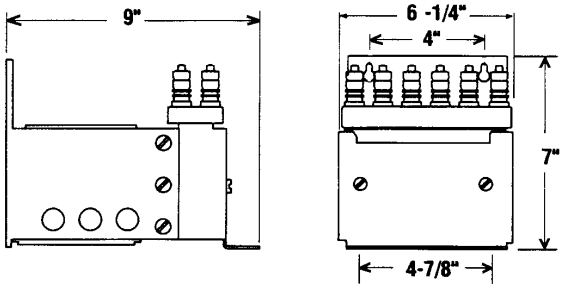

Wayside Products

UNION SWITCH & SIGNAL

RSE-3G1
Rev. 7-03

F-81 DC/AC Inverter

The F-81 Inverter is a fully solid state unit designed to convert direct current into alternating current at high efficiency for applications such as cab signals and standby ac power sources. This unit eliminates the mechanical vibrators of earlier inverters, yielding a unit of exceptional reliability and stability over a wide temperature range.



General Description

The F-81 is housed in a compact steel enclosure with easy-access terminal posts located along a "shelf" at the front of the unit. Conversion from direct to alternating current is accomplished by a solid state inverter-oscillator circuit and a tapped output transformer. The tapped transformer enables quick and easy adjustment of output voltage to system requirements. Short circuit protection is built-in and standard for all models.

Advantages

- Ideal as standby ac power source
- Stable output frequency, high efficiency
- No mechanical vibrator

Specifications

Input Voltage:	12 Vdc
Input Current:	30 A
Output Voltage:	120 Vac (15-15-15-15-50-5-5)
Output Volt/Amps:	300 VA (average power)
Output Freq:	N451033-4001: 60.0 Hz, N451033-4002: 100.0 Hz
Operating Temp:	-40°C to + 70°C

Ordering Information

- Refer to ordering tabulation below for F-81 part numbers.
- Note replacement cross reference for older F-30 and F-80 inverters.
- Request US&S Service Manual SM-6128 for replacement parts.

Unit Dimensions

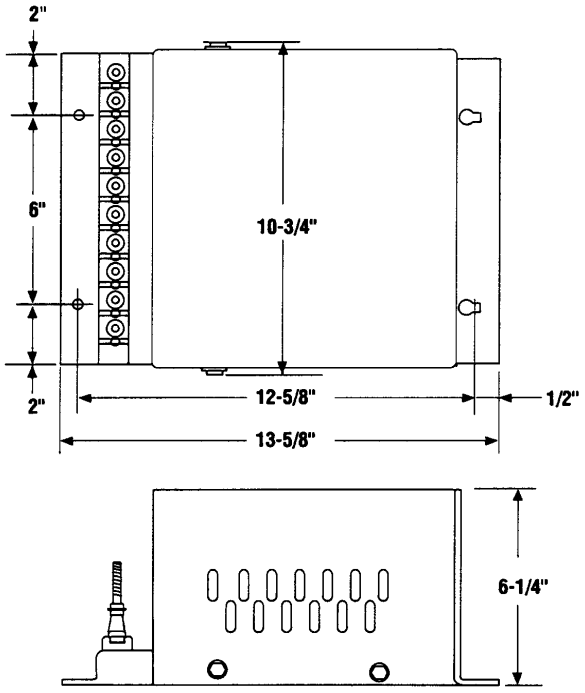

	F-81 Units	
US&S Order No.	Replaces F-30	Replaces F-80
N4510334001	N382592	N4510333403
N4510334002	N390490	N4510333404

UNION SWITCH & SIGNAL

Wayside Products

UNION SWITCH & SIGNAL

RSE-3G2
Rev. 7-03

F-82 DC/AC Inverter

The all-solid state F-82 Inverter can be used as the low-voltage ac power source for up to four Type "C" track circuits. This unit has been in dependable service for many decades on many rail properties.



General Description

The F-82 DC/AC Inverter normally operates from 120 Vac commercial power, but automatically transfers to standby batteries in the event ac power is lost. Input power transfer is accomplished within the F-82 unit; external transfer circuitry is not required. In the standby operating mode, the unit converts dc to ac at high efficiency to minimize battery drain. All components are housed in a rugged sheet steel enclosure designed for shelf or wall mounting. Terminals are located on a convenient "shell" at the unit's front. Contact US&S Sales for additional application data on the F-82 inverter.

Advantages

- Designed for type "C" track circuit applications
- Stable under extreme temperature variations

Specifications

Input Volt:	Normal: 120 Vac
	Standby: 12 Vdc
Input Amps:	Normal: 1 A (max.)
	Standby: 10 A (max.)
Output Volt. (track):	Normal: 5.5 Vac
	Standby: 6.5 Vac
Output Amps (track):	Normal: 3.5 A/secondary (sine waves/secondary)
	Standby: 3.5 A/secondary (sq. waves/secondary)
Temp. Range:	-40°C to + 70°C

Ordering Information

- Refer to ordering tabulation below for standard F-82 part number.
- Request US&S Service Manual SM-6137 for replacement parts.

Unit Dimensions

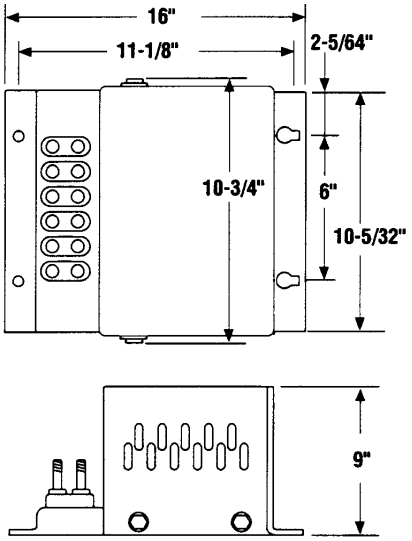

	F-82 Unit
US&S Order No.	
N4510334101	F-82 DC-to-AC Inverter

UNION SWITCH & SIGNAL

UNION SWITCH & SIGNAL

RSE-3G3
Rev. 7-03

F-85 Inverter-Driver

The F-85 Inverter-Driver is a highly reliable signal generator designed for use in phase selective track circuits or any other application requiring a precise and predictable signal output. This unit has shown depenable service for many years on a variety of rail properties.

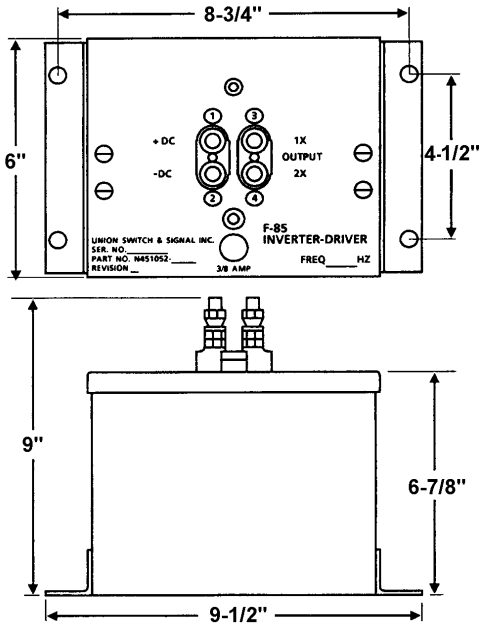

General Description

The F-85 Inverter-Driver is typically used with the US&S F50-1 Inverter-Follower to produce a standard signal 100 Hz over a 9 to 18 V supply voltage range. Depending upon the application, F-85 units can also be developed with customer-specified frequencies. The F-85 is provided as a direct replacement for the F-70 Inverter-Driver (N451034-680_).

Components of the F-85 are housed in a 2-piece sheet metal case with two mounting brackets. Power input and signal output connections are made on four AREMA-standard terminals on top of the case. The unit's input power fuse is also accessible on the front cover.

The case contains two printed circuit boards, the Logic and Output PCB's, which are hard-wired to the external terminals and fuse. A quartz crystal-controlled oscillator on the Logic PCB provides the base frequency for the unit's output. Dual countdown stages on this board provide precisely phased signals to the Output PCB. This board contains summing circuits and amplifiers that receive and process the phased outputs from the Logic PCB. An output transformer on the Output PCB yields the desired square wave signal. An on-board fuse (separate from the front-panel power fuse) is used to cut off the output signal in the event of an out-of-tolerance deviation in the signal.

Advantages

- High precision output
- Phase-selective track circuit and other applications
- Models for all standard output signals

Specifications

Power Input:	9.0 to 18.0 Vdc, 12.0 Vdc nom.
Output Freq:	100.0 Hz : ±1.0 Hz
Load Impedance:	390 ohms, nominal.
Output Power:	8.0 volts minimum (16 V P-P) across 390 ohms-160 mW
Temp. Limits:	-30° to 160°F.
Breakdown Volt:	3000 volts @ 60 Hz

Ordering Information

- Refer to ordering tabulation below for F-85 part number.
- Please supply specified frequency along with order number.
- Contact your US&S Sales Representative to order F-85 units with special frequencies.
- Request US&S Service Manual SM-6306 for replacement parts.

	F-85 Unit
US&S Order No.	
N4510524303	F-85 Inverter-Driver

UNION SWITCH & SIGNAL

UNION SWITCH & SIGNAL

Surge-Ripple Filter

The Surge Ripple Filter provides dependable and long-lasting protection for many classes of electronic equipment such as audio frequency overlay devices. It guards against lightning and other types of power surges, and also aids in reducing voltage ripple caused by battery chargers. This particular unit improves upon previous filters with its solid-state transient voltage suppressor, and new redundant capacitive filter circuit. As a result, the new Surge Ripple Filter works with unprecedented reliability.

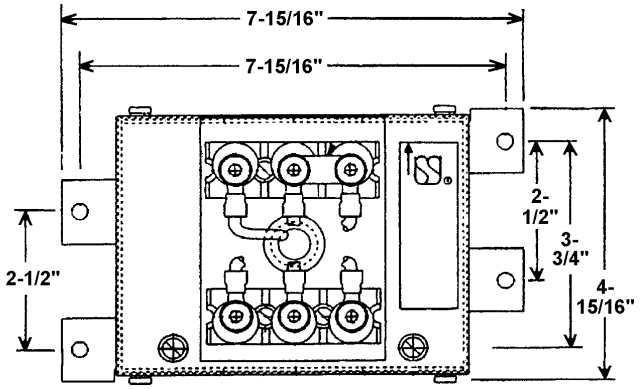

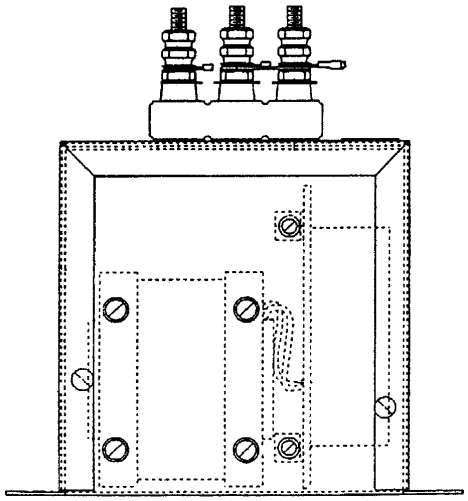

General Description

Ripple reduction is accomplished with a simple LC circuit consisting of an inductor and two capacitors. The capacitors are placed in a redundant configuration to insure filtering should one of them fail. Transient voltage suppression is achieved with an inductor, the Transzorb and an externally mounted lightning arrester (not included with the unit). This model of the Surge Ripple Filter is a direct replacement for older unit N451036-0701 and N451036-0702.

Advantages

- Ideal for AFO track circuits, other installations
- Design improvements yield very high reliability

Specifications

Max. Supplied Volt.:	20V (dc + peark ripple component)
Max. Load Current:	3.15A
Insertion Loss:	Drops nearly 1V with 2.5A load, 1.5V at full load
Term. Connect:	AREMA (AAR)
Mounting:	Wall, rack or shelf
Unit Weight:	9 lbs. (approx.)
Operating Temp.:	-40°C to +70°C

Ordering Information

- Refer to ordering tabulation below for Surge-Ripple Filter part number.
- Make certain the intended application does not exceed the 2.5A current limit for the unit.
- Request US&S Service Manual SM-6265 for replacement parts.

US&S Order No.	Description
N4515900301	Surge-Ripple Filter

UNION SWITCH & SIGNAL

Surge-Ripple Filter

RSE-3H1
Rev. 7-03

Typical Circuit Application

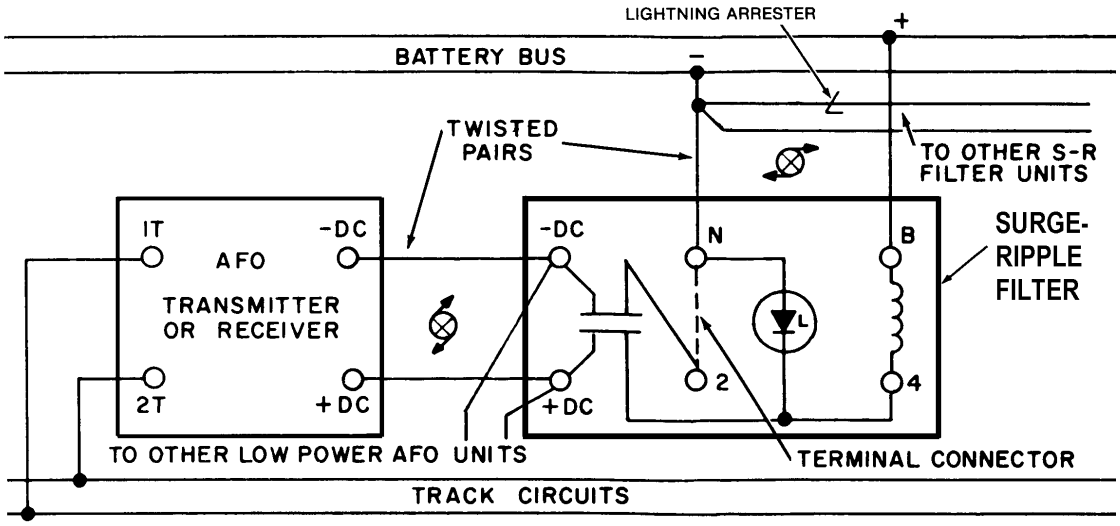

Wayside Products

UNION SWITCH & SIGNAL

RSE-3H2
Rev. 7-03

USGA Lightning Arresters

USG-A Lightning Arresters reduce the chances of damage to electrical and electronic equipment from lightning strokes. As a result, they help minimize service disruptions and equipment down-time. These units incorporate the latest in lightning arrester technology, and are available in several models to satisfy most applications, including high voltage, low voltage and ac line.

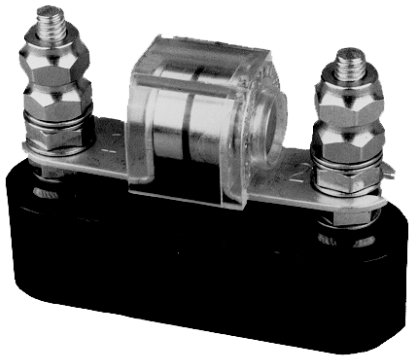

General Description

USG-A Lightning arresters are designed to limit surge voltage transients on electrical equipment below breakdown voltage, and minimize surge current through the equipment. They are provided as separate units, or are mounted on a terminal block. Typical applications are shown in the diagram.

The standard low-voltage arrester is a varistor-filled gap arrester. The varistor material is mounted in parallel with a high durability air gap formed by the separation of two brass disks. Static charges are bled off by the varistor, and fast-rising transients are immediately clipped with a minimum of overshoot.

US&S' low-voltage green arrester is provided for those stringent applications where the minimum possible clamping voltage must be assured. Each green arrester is meticulously tested for this purpose. As shown in the Specifications, the green arrester clamps a 1000 volt dynamic surge to 250 - 450 volts peak. This is typically 100 volts lower than a blue arrester subjected to the same dynamic test.

The high-voltage arrester is a true air-gap arrester. The gap is physically held by a Teflon spacer and is in series with a varistor, making it a current-limiting gap. This arrangement is in parallel with the gap formed by the separation of the brass disks.

USG-A Lightning Arresters are equipped with a high-strength, clear Lexan® cover that permits visual inspection of internal components, and contains the explosive effects of heavy surges. Part numbers are stenciled and color-coded for quick identification of different units.

Advantages

- State-of-the-art lightning protection
- Models for high and low voltage dc, ac line
- Easy to inspect
- "Green" arrester for special applications

Specifications

Operating Voltages:	Low Voltage (blue and green): 32 Vdc, 25 Vac
	High Voltage (red): 250 Vdc, 175 Vac
	AC Line (yellow): 140 Vac
Breakdown Voltage:	Low Voltage (blue and green): 75-200 Vdc, 50-100 Vac (60 Hz)
	High Voltage (red): 500-3000 Vdc, 350-950 Vac
Resistance:	Low Voltage (blue and green): >103 ohms @ 32 Vdc
	High Voltage (red): >109 ohms @ 100 Vdc
AC Line (yellow):	>5 x 103 ohms @ 120 Vac
Dynam. Test Green Arr:	Dynamic wavefront: 1000 VPEAK 10 kV /microsec. rise rate
	Peak V: 250 to 450 V_{PEAK}

UNION SWITCH & SIGNAL

USGA Lightning Arresters

RSE-3H2
Rev. 7-03

Ordering and Additional Information

- Refer to ordering tabulation on reverse side for standard USG-A arrester units and terminal mount kits.
- Order terminal block and mounting hardware separately for low voltage green arrester.
- Request US&S Service Manual SM-6108 for additional information on USG-A Arresters.

	USG-A Arrester Units and Kits				
US&S Order No.	Arrester Unit	Type	Arrester Color	w/Term. Block	w/Mtg. Hardw.
N4515520101	X	Low Volt.	Blue	--	--
N4515520103	X	Low Volt.	Green	--	--
N4515520201	X	High Volt.	Red	--	--
N4515520401	X	AC Line	Yellow	--	--
X4515520301	X	Low Volt.	Blue	X	X
X4515520302	X	High Volt.	Red	X	X
X4515520306	X	AC Line	Yellow	X	X
X4515520308	X	High Volt.	Red	X	X

Typical Circuit Applications

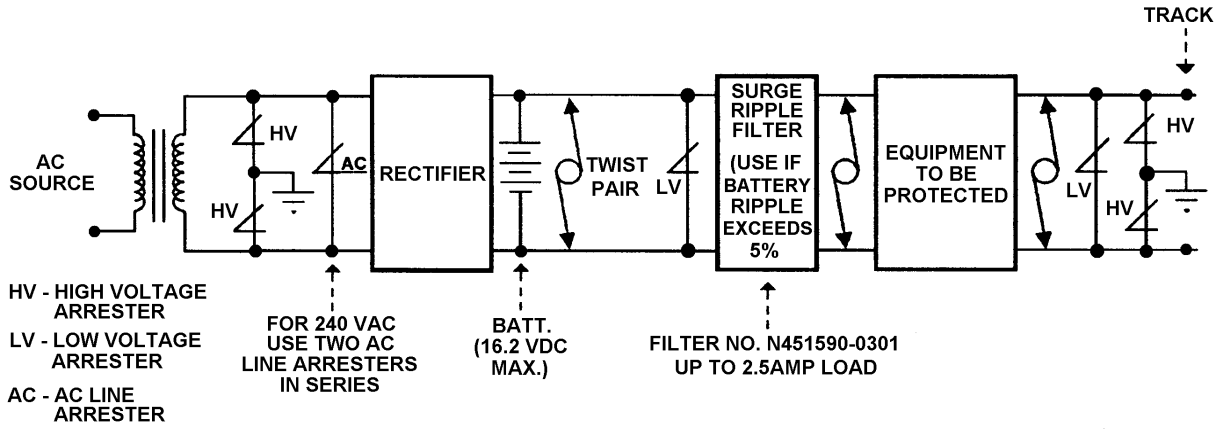

UNION SWITCH & SIGNAL

RSE-3H3
Rev. 7-03

USSP Secondary Surge Suppressors

US&S Secondary Surge Suppressors (USSP) help protect many types of solid-state equipment by limiting electrical surges to this equipment. This is accomplished with solid state suppression and inductance coil circuits and various configurations of primary arresters. Different USSP units cover track circuit, power line and battery line applications, and all are very easy to install.

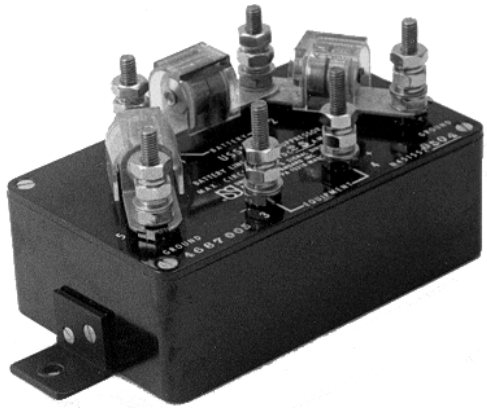

General Description

The basic USSP unit (not including external primary arresters) is designed to limit low energy transients and surges that are of insufficient amplitude to breakover the primary arresters, but can still damage sensitive electronic equipment. A series inductor in each leg of a USSP unit is common to all of these units. The inductors provide isolation impedance between the primary and secondary suppressors. Various clamping devices are used in conjunction with the inductors to limit the different line-to-line voltages. These include Zener diodes, variators and unipolar to bipolar TransZorbs.

Each USSP unit is housed in a high-dielectric plastic case with mounting tabs at each end. Circuit-protective components, internal wiring and standard AREMA terminals are fastened to the unit's cover; this allows fast disassembly for inspection purposes. The top of cover is clearly marked with vital unit operating specifications and terminal nomenclature. Selected models of the USSP are equipped with the US&S USG-A Lightning Arrester (see ***RSE-3H2***), which provide primary voltage surge protection. USSP unit N451552-0534 is designed for use in non-electrified track circuits and track circuits on dc-electrified territories.

Advantages

- Helps protect sensitive electronic equipment from power surges
- Wide range of battery, track and ac line options
- Versions available for non-electrified, dc-electrified track circuits

Specifications and Ordering Information

- Refer to ordering tabulation on reverse side for USSP part numbers and specifications.
- Please indicate required operating specifications along with order number.
- Refer to ***RSE-3H2*** to order additional USG-A lightning arresters for USSP units.
- Request US&S Service Manual SM-6145 for USSP replacement parts and additional application data.

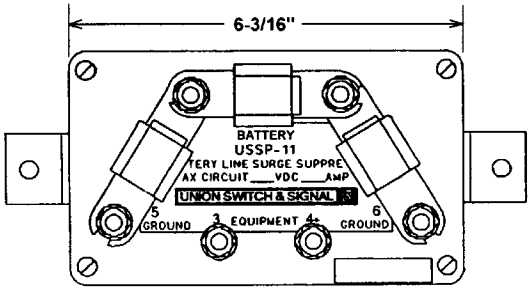

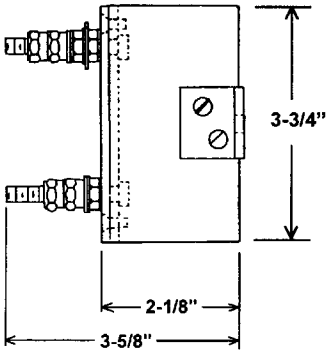

UNION SWITCH & SIGNAL

USSP Secondary Surge Suppressors

RSE-3H3
Rev. 7-03

Specifications and Ordering Information (cont'd)

	USSP Units								
US&S Order N	Model/Type	Max. Circuit Vdc	Max. Circuit Vac	Max. Circuit Amps	Coil Induct (mH)	Capac. mFd	Capac. Volts	Secondary Suppress.	Notes
N4515520501	11/Batt.	18	--	3	150	100	25	18.8 Vdc	(1)
N4515520502	11/Batt.	18	--	7	22	100	25	18.8 Vdc	(1)
N4515520503	11/Batt.	18	--	15	16	100	25	18.8 Vdc	(1)
N4515520504	11/Batt.	18	--	25	5	100	25	18.8 Vdc	(1)
N4515520506	10/Batt.	18	--	7	22	100	25	18.8 Vdc	(2)
N4515520507	10/Batt.	18	--	15	16	100	25	18.8 Vdc	(2)
N4515520508	10/Batt.	18	--	25	5	100	25	18.8 Vdc	(2)
N4515520511	10/Batt.	18	--	15	16	100	25	18.8 Vdc	(3)
N4515520513	11/Batt.	32	--	3	150	100	55	33.3 Vdc	(1)
N4515520514	11/Batt.	32	--	7	22	100	25	33.3 Vdc	(1)
N4515520515	11/Batt.	32	--	15	16	100	55	33.3 Vdc	(1)
N4515520516	11/Batt.	32	--	25	5	100	55	33.3 Vdc	(1)
N4515520519	10/Batt.	32	--	3	150	100	25	33.3 Vdc	(2)
N4515520523	10/Batt.	32	--	15	16	100	55	33.3 Vdc	(3)
N4515520526	20/Track	7	17	50	5	100	55	31.6 Vdc	(2)
N4515520527	20/Track	7	17	50	5	100	55	31.6 Vdc	(3)
N4515520528	30/AC	--	120	20	8	100	55	140 Vac	(4)
N4515520529	31/AC	--	240	20	8	100	55	275 Vac	(4)

Note (1): With one L.V. arrester mounted line-to-line and two H.V. arresters line-to-ground.
Note (2): With one L.V. arrester mounted line-to-line.
Note (3): Without mounted arrester.
Note (4): With one AC Line arrester mounted line-to-line.

USSP-10 Schematic

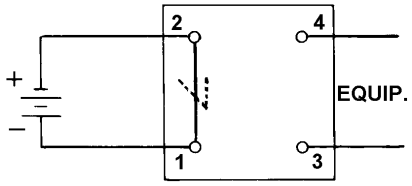

USSP-20 Schematic

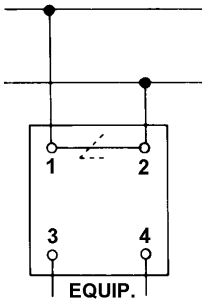

USSP-31 Schematic

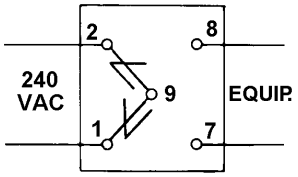

USSP-11 Schematic

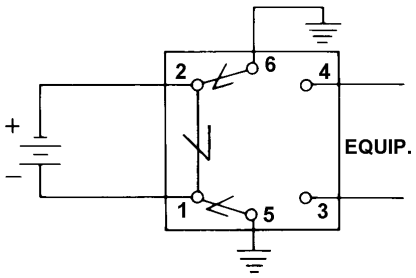

USSP-30 Schematic

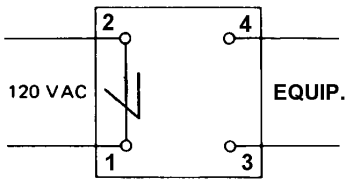

Wayside Products

UNION SWITCH & SIGNAL

RSE-3H4
Rev. 7-03

CMF-101 Common Mode Filter

The US&S CMF-101 Common Mode Filter is a new class of line filter designed to mitigate noise of equal phase and amplitude appearing on a line pair and referenced to a "ground". Common-mode noise is becoming more prevalent in the railroad environment with the increased use of switch mode power supplies and battery chargers, as well as radios, power-line effects, and other "noisy" peripheral equipment. This type of noise has always been present, but has become more evident with the increased use of microprocessor-based electronics.

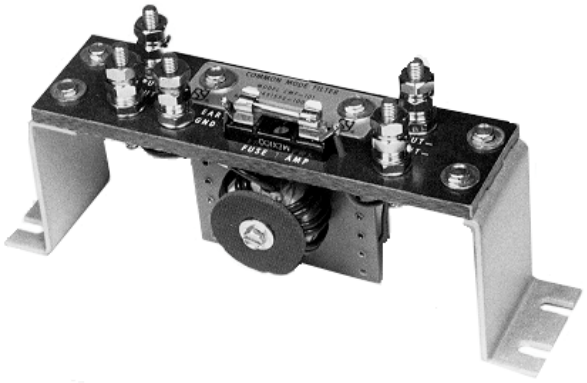

General Description

The CMF-101 is designed primarily for noise mitigation in the 10 KHz to 500 KHz region. The filter consists of a special ferrite toroid that is wound in such a way as to block only common-mode noise components, without affecting normal signals. Each line is by-passed to ground via a capacitor-fuse combination. The CMF-1 01 is mounted as close as possible to the equipment under its protection, with care taken to separate the "clean" and "dirty" sides of the filter wiring. If secondary transient protection is used, the CMF-101 is physically and electrically located closest to the equipment.

Advantages

- Eliminates common mode line noise
- Battery or track applications
- Superb service record

Specifications:

Input: Line Current:	15 A (max.)
Line-to-Line Volt.:	1000 Vdc (max.)
Line-to-Gnd Volt.:	1000 Vdc (max.)
Coil Inductance:	Common-mode: 1.6 mH
	Differential-mode: <10 µH
Capacitance:	Line-to-ground: 0.022µF
	Fuse-to-ground: 1A Fast-Blo, 3AG

Ordering Information

- Refer to ordering tabulation below for CMF-101 part number.
- Contact US&S your US&S Account Executive when ordering for new wayside control systems.
- CMF-101 units can be ordered with different capacitance values per the application. Contact your US&S Account Executive for information.

Unit Dimensions

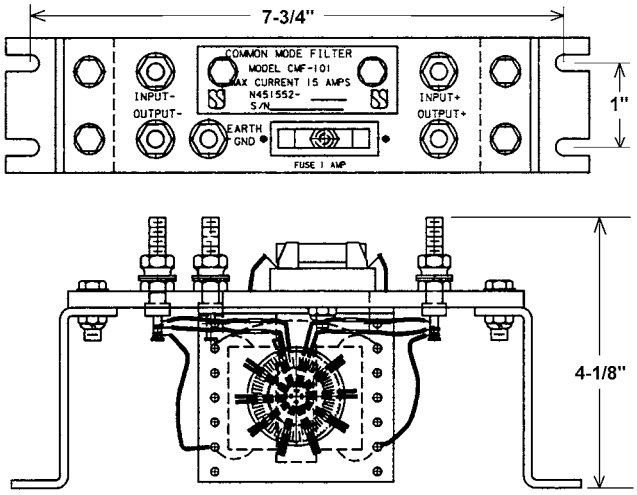

See reverse side for schematic diagram.

US&S Order No.	Description
N4515521001	CMF-101 Common-Mode Filter

UNION SWITCH & SIGNAL

CMF-101 Common Mode Filter

RSE-3H4
Rev. 7-03

CMF-101 Application Diagram

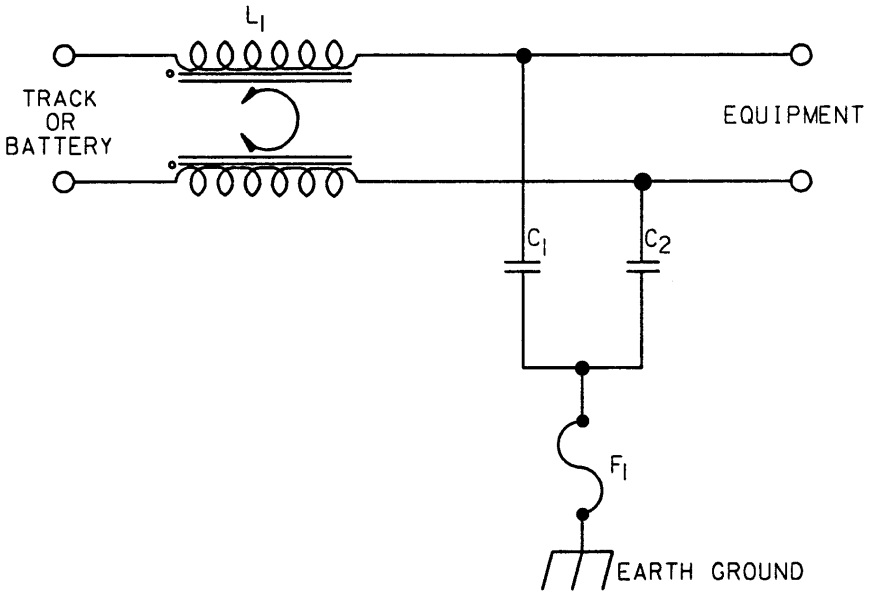



Vital Relays and Timers

Solid-State

- Ordering Guide – Solid State Replacements for Electro- Mechanical Relays and Timers
- PN-150SST Solid-State Timers
- PN-150EVT Electronic Vital Timers
- Five-Second Fixed Electronic Vital Timer
- PN-250CG Solid-State Code Transmitter
- SSCT-B2 Solid-State Code Transmitter
- DMSSCT Solid-State Code Transmitter
- PC-250SS Solid-State Code Follower
- SSCF Solid-State Code Follower

Electro-Mechanical
DC Line - Biased and Neutral

- PN-150B Biased Relay
- PN-150HD Relay – With Heavy Duty Contacts
- PN-150BD 3-Position Relay
- PN-250B Relay

DC Line - Slow Drop-Away and/or Pick-Up

- PN-150BSR Slow Release Relay
- PN-258B Slow Pick-Up Relay
- PN-258BSR Slow Pick-Up/ Slow Release Relay
- PN-259BSR Slow Release Relay
- PN-259SRA Slow Release Relay

DC Line - Biased, D.A., High D.A.

- PN-150BTR Biased Track Relay
- PN-150BH Biased Track Circuit Relay

DC Flasher

- PN-150F Flasher Relay
- PN-250F Flasher Relay

AC Track

- PV-250 2-Element AC Vane Relay

DC Line - Magnetic Stick and Blow-Out

- PP-151 Magnetic Stick Relay
- PN-150BM Magnetic Blow-Out Relay

Switch Contro l- DC and AC Decoding

- PN-150SO DC Switch Control Relay
- PN-152SO DC Switch Control Relay
- PN-258BC Switch Control/Decoding Relay

Code Generating

- PC-250TR Code Generating Relay

Code Following

- PC-250B Biased Code Following Relay
- PC-250P Magnetic Stock Code Following Relay
- PN-150BE High Efficiency Biased Code Following Relay
- PN-250BE Code Following Relay

Light-Out

- PN-150BL Light Out Relay

Power Off

- PN-150P Power-Off Relay

Relay Plug-In Bases

- PN-150/250 Plug-In Relay Bases
- PN-150 Base – GRS(Alstom)/Safetran-Compatible
- Plug-In Relay Receptacle Contact Tools
- PN Relay Shelf Mounting Brackets and Frame

UNION SWITCH & SIGNAL

RSE-4A1
Rev. 7-03

Ordering Guide: Solid-State Replacements for Electro-Mechanical Relays and Timers

US&S is leading the signaling industry in the development of solid-state replacements for traditional electro-mechanical relays and timers. The new all-electronic units provide the same high level of reliability as US&S' renowned PN-150 and -250 series electro-mechanical relays and timers, as well as earlier shelf equivalents, but require much less maintenance and far simpler calibration. In addition, US&S solid-state relays provide additional monitoring and diagnostic features not possible with the earlier devices. Best of all, solid-state relays are designed as direct physical and mechanical replacements for their earlier counterparts, allowing almost instant replacement of one unit for the other in the relay rack or shelf.

The table below is provided to help you locate and identify all the latest US&S solid-state replacements. For any additional availability and application information not covered in this catalog, call toll-free 1-800-652-7276 or contact your US&S Acount Executive.

Make sure to revisit the US&S web site (www.switch.com) for updates to this catalog section as US&S develops more solid-state versions of earlier relays.

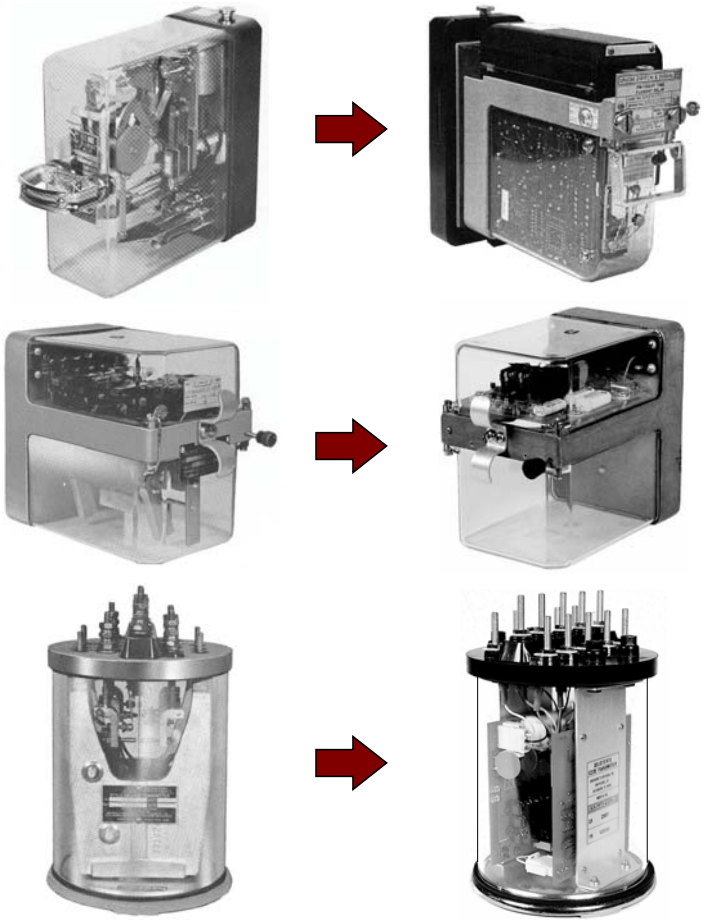

Type of Relay	Electro-Mechanical Model	US&S Solid-State Replacement	RSE Catalog Section Reference
Timer (Plug-In)	US&S PN-150T	PN-150EVT	***RSE-4B2***
Timer (Plug-In)	US&S PT-55	PN-150EVT	***RSE-4B2***
Code Transmitter (Plug-In)	US&S PC-250TR	PN-250CG	***RSE-4C1***
Code Transmitter (Plug-In)	Alstom (GRS) Type B-2	SSCT-B2	***RSE-4C2***
Code Transmitter (Shelf)	US&S "DM" Shelf Relays	DMSSCT	***RSE-4C3***
Code Follower (Plug-In)	US&S PC-250B	PC-250SS	***RSE-4C4***
Code Follower (Plug-In)	Alstom (GRS) Type B-1	SSCF-B1	***RSE-4C5***

UNION SWITCH & SIGNAL

UNION SWITCH & SIGNAL

RSE-4B1
Rev. 7-03

PN-150SST Series Solid-State Timers
(PN-150SST/SP, PN-150SST/DPSD, PN-150SST/SD)

Union Switch & Signal originally developed the PN-150EVT electronic vital timer relay to serve as a solid-state replacement for thermal and mechanical timer relays (see *RSE-4B2*). The PN-150EVT's electronic module and contacts, which are in a three-front/one-back arrangement, are fitted into a standard US&S PN-150-style relay frame. In order to offer a solid-state timer that can drive an external relay with more contacts, so that it can be suitable for a wider variety of applications, US&S has developed the PN-150SST Solid-State Timer.

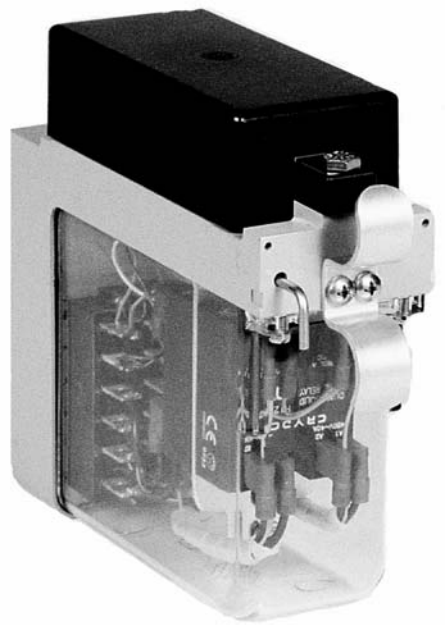

General Description

The US&S PN-150SST Solid-State Timer consists of an electronic module mounted in a standard US&S PN-150 relay frame. The timer's electronic module is the same as the one used in the PN-150EVT unit and includes a digital display. Because it's designed to drive an external vital relay, the PN-150SST contains no relay contacts. As such, it's a direct replacement for the US&S Flexikron® line of electronic timers.

Advantages

- Field programmable from 0.3 secs. to 52 min.
- Uses PN-150EVT electronic module.
- Digital read-out on module displays relay status.
- Accepts a wide range of input voltages.
- Available in three versions.

Application

The PN-150SST Solid-State Timer is available in three versions:

- The PN-150SST/SP offers programmable slow-pick capability.
- The PN-150SST/DPSD is a programmable delayed slow-drop timer with a five-second pick-up delay. This unit is intended to serve as a loss-of-shunt timer in conjunction with a delayed code change or a delayed initiation of grade-crossing signals.
- The PN-150SST/SD features a programmable slow-drop capability. The pick-up also is nominally delayed by approximately 0.3 seconds to guard against unwanted pick-up from a momentary input.

A US&S PN-150 relay (240 to 400 ohms) is typically driven by the PN-150SST timer.

UNION SWITCH & SIGNAL

RSE-4B1
Rev. 7-03

PN-150SST Series Solid-State Timers (PN-150SST/SP, PN-150SST/DPSD, PN-150SST/SD)

Specifications

Operating Voltage: 9.0 to 30V filtered d.c.; 9.0 to 24V unfiltered d.c. with power from full-wave rectifier, 25-60 Hz. 72-240 cpm @ 35% duty cycle.

Current Draw: 100 mA.

Timing Range: 0.3 to 59.9 secs. in 0.1 sec. increments.

1 min. to 52 min 1 sec. increments

Accuracy: ±0.2 sec. with V_{IN} >10 Vdc.

Ordering Information

- Refer to ordering tabulation below for PN-150SST part numbers.

	PN-150SST Relays	
US&S Order No.	Model	
N40107201	PN-150SST/SP	Programmable slow-pick
N40107202	PN-150SST/DPSD	Delayed pick, prog. slow-drop
N40107202	PN-150SST/SD	Programmable slow-drop

UNION SWITCH & SIGNAL

RSE-4B2
Rev. 7-03

PN-150EVT Series Electronic Vital Timers
(PN-150EVT, PN-150EVT-SD, PN-150EVT-DPSD)

For decades, timing functions have been provided through the use of either thermal of mechanical timers. Thermal timers provided only marginal accuracy and mechanical timers were high maintenance items. Now US&S has combined the reliability of solid state electronics with quartz accuracy to produce a highly flexible general purpose solid-state timer: The PN-150EVT. US&S has expanded the PN-150EVT line to include a slow drop solid state programmable timer and a delayed pick-up, slow-drop version.

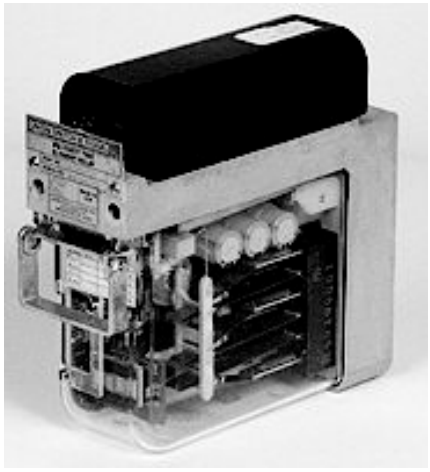

General Description

PN-150EVT

The PN-150EVT Electronic Timer is a programmable timer relay that applies quartz accuracy to timing functions. This timer provides a slow pick function that is field adjustable from 0.3 seconds to 59 minutes 59 seconds. Between 0.3 seconds and 59.9 seconds, the time is adjustable in 0.1 second increments. Between 1 minute and 59 minutes 59 seconds, the time is adjustable in 1 second increments.

The PT-150EVT timer mounts in the same manner as a conventional PN-150 relay, and when mated with an optional adapter base, it is a direct replacement for the PT-55 mechanical time element relay.

PN-150EVT-SD

The PN-150EVT-SD slow-drop electronic timer and the PN-150EVT-DPSD delayed pick-up slow-drop electronic timer are based on the original PN-150EVT design, upgraded with new software to provide an adjustable drop-away time. This timer features a programmable slow-drop function that is field adjustable from 0.0 seconds to 59 minutes, 59 seconds. The drop- away time is adjustable in 0.1 - second increments between an interval of 0.0 seconds and 59.9 seconds. The time is adjustable in 1-second increments between the interval of 1 minute- and 59 minutes, 59 seconds.

PN-150EVT-DPSD

The PN-150EVT-DPSD timer features a five-second delayed pick-up and a programmable slow-drop function, which can be field adjusted for the same periods specified for the PN-150EVT-SD timer above.

Advantages

- Field-programmable from 0.3 sec to 59 mins., 59 sec.
- Direct replacement for PT-55 timer, including mounting in PT-55 base.
- Fewer moving parts for greater reliability, less maintenance.
- Digital display provides easy reading of relay state.
- Accepts wide range of input voltages.

Application

PN-150EVT

Like the PT-55, the PT-150EVT has two inputs. The PT-150EVT uses a coded battery or steady source as power for the micro and other circuits. The clutch input is used to start the countdown and provide power to energize the relay after time has expired.

UNION SWITCH & SIGNAL

PN-150EVT Series Electronic Vital Timers

RSE-4B2
Rev. 7-03

Application (cont'd)

When time is fully run, the contacts are pulled to the picked position until power is removed. If clutch power is removed prior to completion of the preset time, the time is reset to zero and must run full-time again when power is reapplied. Since timing is provided by a processor rather than a mechanical means, no "check back" contact is required, but in order to provide compatibility with existing systems, a single check back contact is provided in the 6CH/6CB position.

PN-150EVT-SD, PN-150EVT-DPSD

The PN-150EVT-SO and PN-150EVT-DPSD timers mount in the same manner as a conventional PN-150 relay. Each timer has two inputs: a steady power source (B+, B-) to power the timers' displays, microprocessors, and other circuits and the clutch input ($+V_{IN}$, $-V_{IN}$), which is used to energize the timers so that the timing functions can be initiated. The two sources of input may share a common point, or they may be isolated from each other.

When V_{IN} is applied, the timer energizes and the display alternates between "SLOV" and the programmed time delay. The "SLOV" display indicates a slow-drop relay.

When V_{IN} is removed, delayed drop-away is initiated. The timer will de-energize when the programmed time is reached. If V_{IN} is re-applied, it will not interrupt countdown unless it is applied for greater than 0.2 seconds for the SD timer or for greater than 5 seconds for the DPSD version. Accuracy of time delay is influenced by the supply voltage, temperature and relay calibration. Over the range of 9 to 30 volts and from -40°C to +70°C, drop-away time is accurate to ±300 milliseconds or ±0.2 %, whichever is greater.

Programming the drop-away time is performed with two toggle switches that are accessible through the front of the Plexiglas cover of the relay. The Plexiglas cover is secured with screws that are wired through the head and lead-sealed.

Specifications

PN-150EVT

Operating Voltage:	9.0 to 30V filtered dc 9.0 to 24 Vdc unfiltered with power from full-wave rectifier, 25-60 Hz. 72-240 CPM@ 35% duty cycle.
Current Draw:	PN-150EVT: 100 mA. PN-150EVT-SD, PN-150EVT-DPSD: 100 mA, 400 mA max.
Timing Range:	PN-150EVT: 0.3 to 59.9 sec. in 0.1 sec. increments. 1 minute to 59 minutes and 59 sec. in 1 sec. increments. PN-150EVT-SD, PN-150EVT-DPSD: 0.0 to 59.9 sec. in 0.1-sec. increments. 1 minute to 59 minutes in 1-sec. increments
Accuracy:	PN-150EVT: +0.2 second with VIN> 10 Vdc. Below 10 Vdc timer may run long by an additional 0.1 sec. PN-150EVT-SD, PN-150EVT-DPSD: +0.3 sec. with VIN >9.0 Vdc or +0.2% of programmed time delay (whichever is greater) Below 0.6 sec., delay = 0.6 seconds PN-150EVT-DPSD: Pick-up delay with VIN 12 Vdc <5.2 sec.
Relay Contacts:	3 timed, independent S.I.C. fronts. 1 timed, independent S.I.C. back.

Ordering Information

- Refer to ordering tabulation on page 3 for PN-150EVT series part numbers, including installation hardware.
- Request the following US&S Service Manuals for additional information
  - SM-6498 for PN-150EVT without test jack
  - SM-6498A for PN-150EVT with test jack
  - SM-6498B for PN-150EVT-SD, PN-150EVT-DPSD

PN-150EVT Series Electronic Vital Timers

UNION SWITCH & SIGNAL

Ordering Information (cont'd)

	PN-150EVT Relays and Installation Hardware						
US&S Order No.	Description	Delay	Relay	Relay W/Jack	Std,. Base X40102001	B1/ST-1 (1) Base N40102901	W/PT-55 Adapt. Base N40101801
N40101701	PN-150EVT	--	X	--	--	--	--
N40103301	PN-150EVT	--	--	X	--	--	--
N40102501	PN-150EVT	--	X	--	X	--	--
N40103401	PN-150EVT	--	--	X	--	--	X
N40103501	PN-150EVT	--	--	X	X	--	--
N40101001	PN-150EVT	--	X	--	--	--	X
X40100002	PN-150EVT	--	X	--	--	X	--
X40100006	PN-150EVT	--	--	X		X	--
N40101702	PN-150EVT DPSD	5 sec.	X	--	--	--	--
N40103302	PN-150EVT DPSD	5 sec.	--	X	--	--	--
N40102502	PN-150EVT DPSD	5 sec.	X	--	X	--	--
N40102505	PN-150EVT DPSD	5 sec.	--	X	X	--	--
X40100003	PN-150EVT DPSD	5 sec.	X	--	--	X	--
X40100007	PN-150EVT DPSD	5 sec.	--	X	--	X	--
N40101703	PN-150EVT SD	--	X	--	--	--	--
N40103303	PN-150EVT SD	--	--	X	--	--	--
N40102503	PN-150EVT SD	--	X	--	X	--	--
N40102506	PN-150EVT SD	--	--	X	X	--	--
X40100004	PN-150EVT SD	--	X	--	--	X	--
X40100008	PN-150EVT SD	--	--	X	--	X	--
N40101704	PN-150EVT DPSD	15 sec.	X	--	--	--	--
N40102507	PN-150EVT DPSD	15 sec.	X	--	X	--	--
X40100009	PN-150EVT DPSD	15 sec.	X	--	--	X	--
N40103304	PN-150EVT DPSD	15 sec.	--	X	--	--	--
N40102504	PN-150EVT DPSD	15 sec.	--	X	X	--	--
X40100005	PN-150EVT DPSD	15 sec.	--	X	--	X	--
X40102001	Base complete w/hardware for all EVTs (#14-16 cont.)						
N40102901	Base complete w/hardware for all Safetran/Alstom (GRS) mounting (#14-16 cont.)						
R40106001	Shelf mounting bracket						
N40101801	PT-55/PN-150EVT adapter only						
	Note (1): For Alstom (GRS) type B-1 and Safetran type ST-1 relay compatibility						

UNION SWITCH & SIGNAL

Five Second Fixed Electronic Vital Timer

Union Switch & Signal's Five Second Fixed Electronic Vital Timer is a microprocessor-based product that provides an accurate and dependable slow pick-up repeater of a relay. In most applications, this solid-state timer is used as a front contact repeater of a track relay for loss of shunt protection.

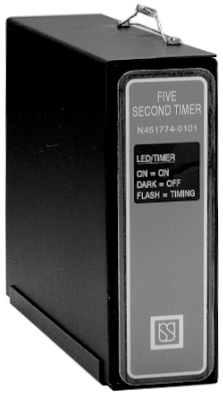

General Description/Application

The Five Second Fixed Timer is physically interchangeable with US&S' older Five Second Timers (N451774-0101, -0102, and -0103), making it an ideal replacement for these units. It is also electrically interchangeable with this timer in most applications.

An LED on the front of the timer indicates the unit's operating status: dark with no input, it flashes at the instant power is applied up until voltage is delivered to the output, and then lights steadily after the time delay is expired. The unit is wired via a 5-point terminal strip on the rear of the unit.

Advantages

- No need for programming
- Solid-state components
- Provides accurate timing
- Simple installation
- Physically interchangeable with US&S' older Five-Second Timer models.
- Low maintenance

Specifications

Dimensions:	6-1/16"H x 2-1/4"w, 8 3/8"D
Operating Volt.:	9 to 30 Vdc from battery source, or 8 to 24 Vdc unfiltered rectified source.
Weight:	2 lbs. (approx.)
Mounting:	Bracket compatible with US&S or GRS relays on std. Racks. Bracket also for wall mounting.

Ordering Information

- Refer to ordering tabulation for Five Second Timer part numbers.
- Contact your US&S Account Executive for information on fixed timers with intervals other than five seconds.
- Request US&S Service Manual SM-6499 for additional information.

Typical Circuit Application

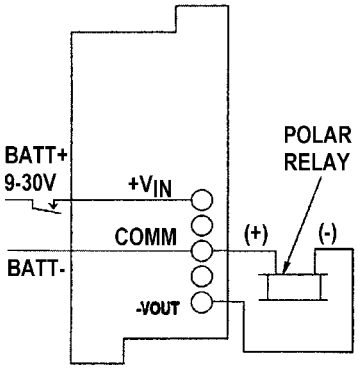

	5-Second Timers and Mounting Hardware
US&S Order No.	
N34300101	5-Second Timer w/o mtg. bracket
N34300102	5-Second Timer w/US&S mtg. bracket
N34300103	5-Second Timer w/GRS mtg. bracket

UNION SWITCH & SIGNAL

UNION SWITCH & SIGNAL

RSE-4C1
Rev. 7-03

PN-250CG Solid-State Code Transmitter Relay

For decades, electromechanical code transmitters have been used to generate the pulses of coded track circuits. While these transmitters are reliable performers, their precise, somewhat complex mechanisms require periodic inspection and maintenance. US&S has developed a more cost-effective, yet equally reliable alternative. The PN-250CG is a solid-state code transmitter option for equivalent US&S electro-mechanical encoders.

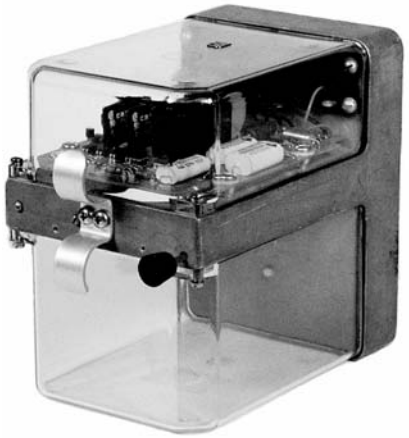

General Description

In electromagnetic code transmitters, an electro-magnetic circuit sustains the motion of a pendulum to generate a pulsed signal, or code, which is transmitted through the rails. The pendulum alternately opens and closes a set of contacts at rates of 50, 75, 120, 180, 276, and 420 times per minute (codes per minute or CPM). The code rates depend on the pendulum's natural period of oscillation. The PN-250CG solid-state coder electronically duplicates this operation.

The US&S PN-250CG is a solid-state code transmitter that is a solid-state option for US&S electromechanical coders. The PN-250CG replaces the US&S PN-250TR relay. This new code transmitters is available in versions for either driving traditional code following relays (using low voltage contacts) or for directly switching 110 Vac (using high voltage contacts) at any selected code rate applied directly to the rail.

Advantages

- No periodic inspection is needed
- Maintenance-free solid-state units replace high maintenance relays
- Direct plug-in connection to existing racks
- No rewiring of existing circuits

Application

Different types of contacts are provided for varying applications with broad classifications of low and high voltage ratings. The contacts identified as "DC" are used to drive a code-following relay and are suitable to switch either AC or DC. The contacts identified as "AC" are suitable to directly code 110 Vac and apply it to the rail. In order to ensure that units of different code rates or contact ratings are not inter-changed, an indexing plate is used to match a set of holes to a set of pins on the plug-in base.

The PN-250CG has been designed to fit in the same rack space as an existing mechanical coder. Additionally all of the contact positions are identical and the same indexing configuration has been retained. This means absolutely no rewiring. Simply remove the old relay and plug in the solid-state replacement.

Specifications

Operating Range:	8 to 16 Vdc rev. volt. protected
Indications:	Alternating LEDs
Temp. Range:	-40 to +70°C.
Switch Rating:	Low Voltage: AC or DC 2.5A, 32 Vdc (max.*) or 22V RMS AC max., 0.05 ohm on resistance (short circuit protected)
	High Voltage: 4A 150V RMS (max.*) AC only. Voltage drop = 1.25 across an ON switch; independent of load current (external 10 amp fuse required for short circuit protection).

(*Max. voltage determined by Tranzorb to protect DC switches from excessive voltage spikes when operating code following relays. For AC version, 150V RMS MOV is similarly used anticipating 120V RMS as source voltage.)

UNION SWITCH & SIGNAL

RSE-4C1
Rev. 7-03

PN-250CG Solid-State Code Transmitter Relay

Specifications (cont'd)

No. of Switches: 4 arranged in opposing pairs.

Dielectric Strength: 2000V RMS between all external isolated connections and case except across open switches limited by Tranzorb or MOV protection.

Ordering Information

- Refer to ordering tabulation below for PN-250CG part numbers.
- Contact your US&S Sales representative for additional technical data.
- Refer to RSE-4C2 for corresponding GRS (Alstom) B2 Coder solid-state replacement.

Ordering Information (cont'd)

	PN-250CG Code Transmitters and Base				
US&S Order No.	Code Rate	Contact Load	Contacts	Indexing A-B-C-D	PC-250TR Replaced
N40105601	180	AC/DC	1F, 3F L.V. 2B, 4B L.V.	5-6-0-1	N322556-001
N40105602	75	AC/DC	1F, 3F L.V. 2B, 4B L.V.	5-6-0-2	N322556-002
N40105603	120	AC/DC	1F, 3F L.V. 2B, 4B L.V.	5-6-0-3	N322556-003
N40105604	180	AC AC/DC	1F, 2B H.V. 3F, 4B L.V.	5-6-0-4	N322556-004
N40105605	75	AC AC/DC	1F, 2B H.V. 3F, 4B L.V.	5-6-0-5	N322556-005
N40105606	120	AC AC/DC	1F, 2B H.V. 3F, 4B L.V.	5-6-0-6	N322556-006
N40105607	180	AC	1F,2B,3F,4B H.V.	5-6-0-7	N322556-007
N40105608	270	AC	1F,2B,3F,4B H.V.	5-6-0-8	N322556-008
N40105609	270	AC/DC	1F,3F,2B,4B L.V.	5-6-0-9	N322556-009
N40105610	270	AC	1F,2B,3F,4B H.V.	5-6-1-0	N322556-010
N40105611	120	AC	1F,2B,3F,4B H.V.	5-6-1-1	N322556-011
N40105612	75	AC	1F,2B,3F,4B H.V.	5-6-1-2	N322556-012
N40105613	120	AC	1F,2B,3F,4B H.V.	5-6-1-3	N322556-013
N40105614	180	AC	1F,2B,3F,4B H.V.	5-6-1-4	N322556-014
N40105616	420	AC	1F,2B,3F,4B H.V.	5-6-1-6	N322556-016
N40105617	50	AC	1F,2B,3F,4B H.V.	5-6-1-7	N322556-017
N40105618	75 75	AC/DC AC/DC	1F,3F,2B,4B L.V. 1F,3F,2B,4B L.V.	5-6-1-8 5-6-1-8	N322556-018 N322556-818
N40105619	270	AC/DC AC	3F, 4B L.V. 1F, 2B H.V.	5-6-1-9	N322556-019
N40105620	420	AC/DC AC	3F, 4B L.V. 1F, 2B H.V.	5-6-2-0	N322556-020
N40105621	50	AC/DC	1F,3F,2B,4B L.V.	5-6-2-1	N322556-021
N40105622	420	AC/DC	1F,3F,2B,4B L.V.	5-6-2-2	N322556-022
N438689003	Plug-In base for PN-250CG (ref. RSE 4R1)				

UNION SWITCH & SIGNAL

RSE-4C2
Rev. 7-03

SSCT-B2 Solid-State Code Transmitter

(Replacment for Alstom (GRS) Type B-2 Transmitter)

For decades, electromechanical code transmitters have been used to generate the pulses of coded track circuits. While these transmitters are reliable performers, their precise, somewhat complex mechanisms require periodic inspection and maintenance. US&S has developed a more cost-effective, yet equally reliable alternative. The SSCT-B2 is a solid-state code transmitter option for equivalent GRS (Alstom) B-2 plug-in electro-mechanical encoders.



General Description

In electromagnetic code transmitters, an electro-magnetic circuit sustains the motion of a pendulum to generate a pulsed signal, or code, which is transmitted through the rails. The pendulum alternately opens and closes a set of contacts at rates of 50, 75, 120, 180, 276, and 420 times per minute (codes per minute or CPM). The code rates depend on the pendulum's natural period of oscillation. The SSCT-B2 solid-state coder electronically duplicates this operation.

The US&S SSCT-B2 is a solid-state code transmitter that is a solid-state option for GRS electromechanical coders. The SSCT-B2 replaces the GRS B2 relay. This new code transmitter is available in versions for either driving traditional code following relays (using low voltage contacts) or for directly switching 110 Vac (using high voltage contacts) at any selected code rate applied directly to the rail.

Advantages

- No periodic inspection is needed
- Maintenance-free solid-state units replace high maintenance electro-mechanical relays
- Direct plug-in connection to existing racks
- No rewiring of existing circuits

Application

Different types of contacts are provided for varying applications with broad classifications of low and high voltage ratings. The contacts identified as "DC" are used to drive a code-following relay and are suitable to switch either AC or DC. The contacts identified as "AC" are suitable to directly code 110 Vac and apply it to the rail. In order to ensure that units of different code rates or contact ratings are not inter-changed, an indexing plate is used to match a set of holes to a set of pins on the plug-in base.

The SSCT-B2 has been designed to fit in the same rack space as an existing mechanical coder. Additionally all of the contact positions are identical and the same indexing configuration has been retained. This means absolutely no rewiring. Simply remove the old relay and plug in the solid-state replacement.

Specifications

Oper. V. Range:	8 to 16 Vdc, reverse voltage protected
Indications:	Alternating LEDs
Temp. Range:	-40 to +70°C.

UNION SWITCH & SIGNAL

RSE-4C2
Rev. 7-03

SSCT-B2 Solid-State Code Transmitter
(Replacment for Alstom (GRS) Type B-2 Transmitter)

Specifications (cont'd)

Switch Rating: Low Voltage: AC or DC 2.5A, 32 Vdc (max.*) or 22V RMS AC max., 0.05 ohm on resistance (short circuit protected)

Switch Rating: High Voltage: 4A 150V RMS (max.*) AC only. Voltage drop = 1.25 across an ON switch; independent of load current (external 10 amp fuse required for short circuit protection).

(*Max. voltage determined by Tranzorb to protect DC switches from excessive voltage spikes when operating code following relays. For AC version, 150V RMS MOV is similarly used anticipating 120V RMS as source voltage.)

No. of Switches: 4 arranged in opposing pairs.

Dielec. Strength: 2000V RMS between all external isolated connections and case except across open switches limited by Tranzorb or MOV protection.

Retrofit Service

US&S can provide a retrofitting service for existing GRS coder relays. US&S will take an existing electro-mechanical code transmitter, completely refurbish the case, and install the electronics required to make the coder a solid state device. All of the mechanical parts, of course, are eliminated. (Refer to the "Service & Repair" section of this catalog for additional information on US&S remanufacturing services.)

Ordering Information

- Refer to ordering tabulation below for SSCT-B2 part numbers.
- Contact your US&S Account Executive for additional information.

	SSCT-B2 Code Transmitters				
US&S Order No.	Code Rate	Contact Load	Contacts	Indexing	B-2 Replaced
N32000101	50	AC	2F, 2B H.V.	1-3-10-25	A62-643
N32000102	75	AC	2F, 2B H.V.	1-2-17-19	A62-175
N32000103	120	AC	2F, 2B H.V.	1-2-17-20	A62-176
N32000104	180	AC	2F, 2B H.V.	1-2-17-21	A62-177
N32000105	50	AC/DC	2F, 2B L.V.	1-2-5-6	A62-642
N32000106	75	AC/DC	2F, 2B L.V.	1-2-5-14	A62-170
N32000107	120	AC/DC	2F, 2B L.V.	1-2-5-15	A62-171
N32000108	180	AC/DC	2F, 2B L.V.	1-2-5-16	A62-172
N32000109	50	AC, AC/DC	1FB HV, 1FB LV	--	--
N32000110	75	AC, AC/DC	1FB HV, 1FB LV	1-4-5-7	--
N32000111	120	AC, AC/DC	1FB HV, 1FB LV	--	--
N32000112	180	AC, AC/DC	1FB HV, 1FB LV	--	--
N32000113	270	AC	2F, 2B H.V.	1-3-9-22	A62-178
N32000114	420	AC	2F, 2B H.V.	--	--
N32000115	270	AC/DC	2F, 2B L.V.	1-3-7-8	A62-173
N32000116	420	AC/DC	2F, 2B L.V.	--	--
N32000117	270	AC, AC/DC	1FB HV, 1FB LV	--	--
N32000118	420	AC, AC/DC	1FB HV, 1FB LV	--	--

UNION SWITCH & SIGNAL

RSE-4C3
Rev. 7-03

DMSSCT Solid-State Code Transmitter
(Replacement for US&S DM Style Transmitter)

For decades, electromechanical code transmitters have been used to generate the pulses of coded track circuits. While these transmitters are reliable performers, their precise, somewhat complex mechanisms require periodic inspection and maintenance. US&S has developed a more cost-effective, yet equally reliable alternative. The DMSSCT is a direct replacement for the US&S shelf type DM mechanical code transmitter.

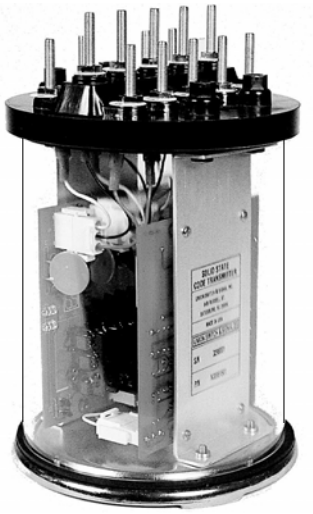

General Description

The DMSSCT relay duplicates the 50, 75, 120, 180 code rates of the electro-mechanical DM shelf relay. This relay incorporates internal Tranzorb protection for switching the code following relays, and also includes automatically re-settable internal short circuit protection. The DMSSCT is externally constructed to match the DM shelf style transmitter space. The positioning of AREMA (AAR) terminals and assigned functions are identical to the mechanical counterpart to permit direct substitution of the mechanical relay by the electronic unit. Code transmitting circuit (electronic module) are contained in the familiar "cookie" jar shelf unit and are easily extracted for servicing. Alternating LEDs visible on the module indicate code transmissions in progress.

Advantages

- Direct mechanical and electrical replacement for earlier US&S DM series shelf relays.
- Provides all required code rates.
- Equipped with automatically-resettable short-circuit protection.
- Easy replacement of electronics module.
- LEDs show code transmissions

Specifications

Nom. Code Rates:	50, 75, 120, 180 CPM
Input (Coil) Volt:	8 to 16 Vdc
Output Config.:	4 sets of transfers (max.) arranged in any combination of high voltage AC or low voltage AC/DC switches.
Switch Rating (LV):	AC or DC 2.5A, 32 Vdc (max.) or 22V RMS AC (max.) 0.5 ohms ON resistance
	Short circuit protection: 3.75A
	Tranzorb protection: 34V to 38V
Switch Rating (HV):	4A 150 V RMS (max.) ac only, MOV protected
Dielectric Strength:	3000V RMS
Temp. Range:	Operating -40° to +70°C.

Ordering Information

- Refer to ordering tabulation on reverse side for DMSSCT part numbers.
- Contact your US&S Account Executive for additional information.

UNION SWITCH & SIGNAL

DMSSCT Solid-State Code Transmitter

RSE-4C3
Rev. 7-03

Ordering Information (cont'd)

	DMSSCT Code Transmitters				
US&S Order No.	Code Rate	Contact Types	AC Contacts	AC/DC Contacts	DM Replaced
N32001501	180	L.V./H.V.	3F, 3B, 4F, 4B	1F, 1B, 2F, 2B	N221561
N32001502	180	H.V./H.V.	1F to 4B (1)	--	--
N32001503	120	H.V./H.V.	1F to 4B (1)	--	N221556
N32001504	75	H.V./H.V.	1F to 4B (1)	--	N242043
	Note (1): Contacts 1F, 1B, 2F, 2B, 3F, 3B, 4F, 4B				

UNION SWITCH & SIGNAL

RSE-4C4
Rev. 7-03

PC-250SS Solid-State Code Follower
(Replacement for PC-250B Relay)

Electro-mechanical code-following relays have been used for years to receive the pulses of coded energy. While these code followers have proven to be reliable performers, their mechanisms require periodic inspection and maintenance. US&S has developed a more cost-effective yet equally dependable alternative: the PC-250SS solid-state code follower. By using solid-state electronics to replace the mechanisms of the equivalent US&S PC-250B electro-mechanical code follower, this new relay eliminates the need for field adjustment and calibration - while delivering the proven performance and historical reliability of the traditional units.

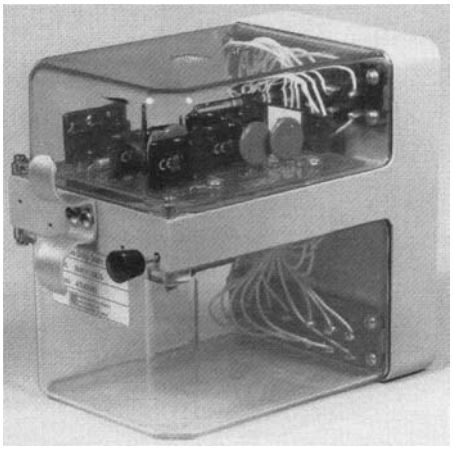

General Description

The US&S PC-250B SS relay is a solid-state code follower that serves as a solid-state option for the US&S PC-250B. The new code-following relay consists primarily of two solid-state circuit boards housed in a US&S PN-250-style aluminum frame with a clear cover. Four solid-state switches are mounted on each of the circuit boards. Two of the switches on each circuit board are used as front contacts, and two are used as back contacts. Each of the switches is a normally open device. To emulate a back-contact function, it is necessary to apply steady energy to one set of terminals to enable the back-contact switches. Applying coded energy to another set of terminals activates the front-contact switches. If back contacts are not required, it is not necessary to enable them, as the front-contact switches will operate independently.

The pin-out of the contact section of the PC-250B SS solid-state code follower is the same as that used in the US&S PC-250B code-following relay.

Advantages

- No periodic inspection needed.
- Eliminates need for field adjustment, calibration.
- Solid-state option for electro-mechanical counterparts.
- Direct plug-in connection to existing racks.
- No rewiring of existing circuits required.

Application

Each of the two circuit boards in the PC-250B SS solid-state code follower can operate as a single two-front, two-back relay. When used together, the circuit boards function as a 4-front, 4-back relay. When used individually, the boards can be operated at different code frequencies. The circuit boards can be configured for low-voltage or high-voltage applications. Low-voltage application can support load currents to 2.5A @ 30 Vdc or 21 Vac (RMS). In the high-voltage mode, the PC-250B SS can support loads up to 2.5A @ 120 Vac (RMS).

The PC-250B SS code follower has been developed as a solid-state option for the US&S electro-mechanical PC-250B code-following relay. It is designed to fit in the same rack space (mounting base) as the PC-250B. All of the contact positions are identical, and the same indexing configuration has been retained. With the exception of the two additional wires needed for back-contact power, the pin-out is identical to the PC-250B. Once this wiring has been added to the mounting base, either relay (PC-250B SS or PC-250B) can be plugged into the base.

UNION SWITCH & SIGNAL

RSE-4C4
Rev. 7-03

PC-250SS Solid-State Code Follower
(Replacement for PC-250B Relay)

Specifications

Operating Range: 8.5 to 16 Vdc reverse voltage protected, filtered or full-wave rectified unfiltered.

Operating Current: @12 Vdc:

For steady input: 44 mA.

For coded input: 140 mA.

Indications: Alternating yellow and green LEDs.

Operating Temp.: -40° to +70 °C

Switch Rating: Low voltage: AC or DC 2.5A, 32 Vdc (max.*) or 22V RMS AC Max. (short-circuit protected).

High voltage: 0.06 to 2.5A, 150 V RMS (max.*) AC only. Voltage drop 1.25V across an ON switch, independent of load current (external 10A fuse required for short-circuit protection).

*Maximum voltage determined by Tranzorb to protect DC switches from excessive voltage spikes.

Specifications (cont'd)

No. of Switches: 8 arranged as 4 independent single-pole, double-throw switches.

Ordering Information

- Refer to ordering tabulation below for PC-250SS part numbers.
- Request US&S Service Manual SM-9028 and SM-9029 for additional information.

	PC-250SS Code Followers - Biased					
US&S Order No.	Voltage	Ohms	Contact Loads	Contacts	Indexing A-B-C-D	PC-250B Replaced
N40115901	14 to 16	360	AC AC/DC	2F, 2B H.V. 2F, 2B L.V.	5-9-0-1	N322559-001
N40115902	14 to 16	360	AC/DC	4F, 4B L.V.	5-9-0-2	N322559-002 N322559-802
N40115903	8 to 12	135	AC/DC	4F, 4B L.V.	5-9-0-3	N322559-003
N40115904	8 to 12	135	AC/DC	4F, 4B L.V.	5-9-0-4	N322559-004
N40115905	8 to 12	135	AC AC/DC	2F, 2B H.V. 2F, 2B L.V.	5-9-0-5	N322559-005
N40115915	8 to 12	225	AC/DC	4F, 4B L.V.	5-9-1-5	N322559-015

	PC-250SS Code Followers - Polar Stick (for Phase-Selective Applications)				
US&S Order No.	Ohms	Norm. Contacts	Rev. Contacts	Indexing	PC-250P Replaced
N40115914	20/20	AC, 2N H.V.	AC/DC, 2R L.V.	5-9-1-4	N322559-014
N40115916	20/20	AC/DC, 4N L.V.	AC/DC, 4N H.V.	5-9-1-6	N322559-016

UNION SWITCH & SIGNAL

RSE-4C5
Rev. 7-03

SSCF-B1 Solid-State Code Follower
(Replacement for GRS (Alstom) Type B-1 Relay)

Electro-mechanical code-following relays have been used for years to receive the pulses of coded energy. While these code followers have proven to be reliable performers, their mechanisms require periodic inspection and maintenance. US&S has developed a more cost-effective yet equally dependable alternative: the SSCF-B1 solid-state code follower. By using solid-state electronics to replace the mechanisms of the equivalent GRS Type B-1 electro-mechanical code follower, this new relay eliminates the need for field adjustment and calibration - while delivering the required performance and reliability of the traditional units.



General Description

The US&S SSCF-B1 relay is a solid-state code follower that serves as a solid-state option for the GRS (Alstom) Type B-1 code follower. Four pairs of solid-state switch-output modules are mounted on the circuit board. Each pair of solid-state switch modules replaces a set of mechanical transfer contacts of the Type B-1 code-following relay. In the SSCF-B1 relay, all components are assembled onto a single circuit board emulating a 4-front, 4-back relay operating as a single code relay. The pin-out is equivalent to that used on the Type B-1 relays.

Advantages

- No periodic inspection needed.
- Eliminates the need for field adjustment and calibration.
- Solid-state options for electro-mechanical counterparts.
- Direct plug-in connection to existing racks.
- No rewiring of existing circuits required.

Application

In the SSCF-B1 solid-state code follower, each pair of output modules can consist of either high-voltage or low-voltage solid-state switches. A variety of output configurations, such as all low voltage, all high voltage, or any combination of the paired output modules, can be provided according to application requirements.

The SSCF-B1 code follower has been developed as a solid-state option for the GRS electro-mechanical Type B-1 code-following relay. It is designed to fit in the same rack space (mounting base) as the B-1. All of the contact positions are identical, and the same indexing configuration has been retained. With the exception of the two additional wires needed for back-contact power, the pin-out is identical to the B-1. Once this wiring has been added to the mounting base, either relay (SSCF-B1 or B-1) can be plugged into the base.

Specifications

Operating Range:	8.5 to 16 Vdc reverse voltage protected, filtered or full-wave rectified unfiltered.
Operating Current:	@12 Vdc:
	For steady input: 44 mA.
	For coded input: 140 mA.
Indications:	Alternating yellow & green LEDs.

UNION SWITCH & SIGNAL

RSE-4C5
Rev. 7-03

SSCF-B1 Solid-State Code Follower
(Replacement for GRS (Alstom) Type B-1 Relay)

Specifications (cont'd)

Operating Temp.: -40° to +70°C

Switch Rating: Low voltage: AC or DC 2.5A, 32 Vdc (max.*) or 22V RMS AC Max. (short-circuit protected).

High voltage: 0.06 to 2.5A, 150 V RMS (max.*) AC only. Voltage drop 1.25V across an ON switch, independent of load current (external 10A fuse required for short-circuit protection).

*Maximum voltage determined by Tranzorb to protect DC switches from excessive voltage spikes.

No. of Switches: 8 arranged as 4 independent single-pole, double-throw switches.

Retrofit Service

US&S can provide a retrofitting service for existing GRS code follower relays. US&S will take an existing electro-mechanical code follower, completely refurbish the case, and install the electronics required to make the code follower a solid state device. All of the mechanical parts, of course, are eliminated. (Refer to the "Service & Repair" section of this catalog for additional information on US&S remanufacturing services.)

Ordering Information

- Refer to ordering tabulation for SSCF-B1 part numbers.
- Request US&S Service Manuals SM-9025 and SM-9026 for additional imforation.

	SSCF-B1 Code Followers					
US&S Order No.	Type	Contact Loads	Contacts	Indexing	GRS Replaced	Notes
N32003001	Biased	AC, AC/DC	2FB LV, 2FB HV	1-3-9	A62-598	--
N32003002	Biased	AC/DC	4FB L.V.	1-3-4	A62-157	--
N32003003	Biased	AC/DC	2FB L.V.	1-2-13	A62-156	--
N32003004	Biased	AC, AC/DC	2FL.V., 2F H.V.	1-2-18	A62-595	--
N32003005	Polar	AC/DC	1NR LV, 1NR LV	1-3-25	A62-659	(1)
N32003006	Polar	AC, AC/DC	2NR LV, 2NR LV	1-3-10	A62-626	(1)
N32003007	Polar	AC/DC	4N 4R LV	--	A62-246	(1)
	Note (1): Used for Phase-Selective applications only.					

UNION SWITCH & SIGNAL

PN-150B Biased Relay

General Description

The PN-150B relay is designed for use in line and logic circuits requiring contact capacities up to 4 amperes. If greater capacity is required, the PN-150HD relay is recommended (see ***RSE-4E2***). If an equivalent relay with more contacts is required, the PN-250B relay is recommended (see ***RSE-4E4***). Because the PN-150B relay is naturally biased, it becomes a battery-checking relay to ensure that the logic energy has the proper polarity. This is especially important where some of the circuits are polarity-responsive, such as in switch repeating and polar line circuits. For a relay that operates on lower energization values, the PN-150BE relay is recommended (see ***RSE-4M3***). Contacts of the PN-150B relay are standard low voltage silver to silver-impregnated carbon front and silver-to-silver back. All PN-150B relays incorporate Lexan® covers.

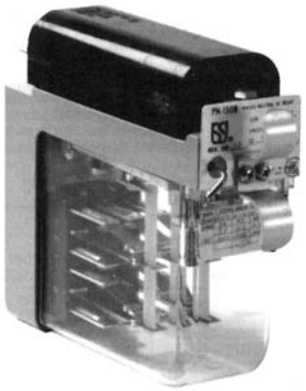

Ordering Information

- Standard relay and plug-in base order numbers listed in tabulation and ***RSE-4R1***.
- When writing your order, specify the required contacts and coil resistance.
- Relay bases are ordered separately. Indicate the type of relay to be used with that base.
- For detailed specifications and complete parts lists, request US&S Service Manual SM-4596.

Specifications

- Refer to the ordering tabulation for operating specifications.

	PN-150B Relays and Base						
US&S Order No.	Front Test	Contacts	Coil Res.	Energ. Amps (1)	Energ. Volts (1)	System Volt.	Notes
N322500701	X	6FB Std.	400	0.0132	5.30	10	--
N322500702	X	6FB Std.	800	0.0105	8.40	12 to 14	--
N322500703	X	6FB Std.	1300	0.0082	10.70	16 to 24	(2)
N322500704	X	6FB Std.	100	0.0264	2.64	--	(2)
N322500705	X	6FB Std.	240	0.0177	4.24	--	(2)
N322500801	--	6FB Std.	400	0.0132	5.30	10	--
N322500802	--	6FB Std.	800	0.0105	8.40	12 to 14	--
N322500803	--	6FB Std.	1300	0.0082	10.70	16 to 24	--
N322500807	--	4FB, 2F, 1 Std.	1300	0.0082	10.70	16 to 24	--
N322500808	--	4FB, 2F, 1 Std.	800	0.0105	8.40	12 to 14	--
N322500809	--	4FB, 2F, 1 Std.	400	0.0132	5.30	10	--
N4513760302	Plug-In base for PN-150B (ref. RSE 4R1)						
	Note (1): Value at which relay will become energized. Response will generally occur at some lower value. Note (2): Normally used in series with another relay.						

(See reverse side for general features of US&S electro-mechanical vital relays.)

UNION SWITCH & SIGNAL

PN-150B Biased Relay

RSE-4E1
Rev. 7-03

General Features of US&S PN-Series Electro-Mechanical Vital Relays

US&S vital and non-vital plug-in relays serve a multitude of functions in both railroad and transit control circuit applications. These time-proven relays are space-saving, easily installed or removed and can be handled in the field without disturbing coil or contact wiring.

In addition to production of PN-series electro-mechanical relays at the same high standards, US&S also provides high-quality remanufacturing services for these relays so that they can be returned to service in like-new condition. Refer to the "Remanufacturing Services" of this catalog or call 1-800-652-7276 for additional information.

Advantages

- Wide selection available for every application
- Meets or exceeds applicable AREMA (AAR) requirements
- Plug-in design permits quick installation or removal
- Indexed to assure proper mounting
- Sturdy plug-in base for every relay model
- Operates over wide temperature range

High Quality Design and Assembly

All components of US&S plug-in relays are constructed according to rigid quality control standards and are thoroughly tested before shipment. Coils are encapsulated for protection against mechanical damage and moisture. Magnetic circuits are constructed of non-aging materials. The air gap is not disturbed when the coil is removed or the contact springs adjusted. Those relays with an adjustable magnetic shunt may be adjusted for degree of magnetic hold-down force without changing the contact adjustment or the hold-down pole-piece position.

Contact fingers and springs utilize a simple, reliable design and are heat treated to assure uniformity of material and contact stability. The heavy contact fingers extend through the base to serve as plug connectors. Heel contacts are actuated by operating arms pivoted to the armature. Contact surfaces have sufficient wiping action to be self-cleaning. "Standard" contact materials include fine silver heels and backs, and silver-impregnated carbon (S.I.C.) fronts with a typical capacity of 4A @ 30 Vdc or 175 Vac. "Heavy Duty" (H.D.)" contact materials also include fine silver heels and backs and silver-impregnated carbon (S.I.C.) fronts with a typical capacity of 15A @30 Vdc or 175 Vac.

Other types of contact material for special application are described with the particular relay. Standard contacts are factory-adjusted to standard minimum opening and conform to AREMA (AAR) requirements.

All vital plug-in relays incorporate a transparent molded cover over the relay contacts and armature structure. The cover is sealed to the frame with a gaskethat assures a tight, dust-proof and moisture-proof seal.

Contact Designations

Front and back contacts of plug-in relays are designated "F" and "B", respectively. The dependent contacts are denoted FB, while the independent contacts are denoted "F" or "B" alone.

Testing

Many US&S vital relays are provided a front testing capability. The front testing facility is in series with the coil control circuit to permit deenergization of the relay while it is in its service mounting, without disturbing the relay or wiring. Testing may also be accomplished through the rear of the relay mounting base without opening a contact or coil circuit. Refer to ***RSE-4S1*** for special tools utilized in maintaining US&S plug-in relays.

Latch

A spring-operated latch holds each plug-in relay securely to its mounting base. The latch is released by pressing a button on the front of the relay.

Indexing

All plug-in relays are equipped with indexing pins to prevent insertion of an incorrect relay into the mounting base. Each relay is accompanied by an indexing plate that is applied to the base at the initial installation.

System Voltage

This voltage, which is listed in the relay ordering tabulation specifications, is prescribed for relays in locally energized circuits. Higher voltage may be used, if required, up to 10 watts power dissipation.

UNION SWITCH & SIGNAL

PN-150HD Biased Relay (With Heavy Duty Contacts)

General Description

The PN-150HD relay has six transfer contacts. Four are heavy duty contacts that can carry 15 amperes up to 30 volts dc and ac. The other two contacts are standard contacts with a 4-ampere capacity. This relay can be used in place of a PN-150B relay when greater contact capacity is required. The PN-150HD requires the indicated polarity for its operation. However, due to the high back contact pressure, it cannot be considered a true biased relay in accordance with AREMA specifications.

Contacts of the PN-150HD relay are Heavy duty silver to silver-impregnated carbon front and silver-to-silver back, standard low voltage silver to silver-impregnated carbon front and silver-to-silver back. All PN-150HD relays incorporate Lexan® covers.

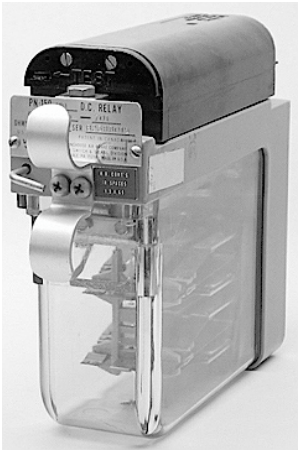

Specifications

- Refer to the ordering tabulation for operating specifications.

Ordering Information

- Standard relay and plug-in base order numbers listed in tabulation and ***RSE-4R1***.
- When writing your order, specify the required contacts and coil resistance.
- Relay bases are ordered separately. Indicate the type of relay to be used with that base.
- For detailed specifications and complete parts lists, request US&S Service Manual SM-4596E.

	PN-150HD Relays and Bases					
US&S Order No.	Front Test	Contacts	Coil Res.	Energ. Amps (1)	Energ. Volts (1)	System Volt.
N322505701	X	4FB H.D., 2FB Std.	400	0.0132	5.30	10
N322505702	X	4FB H.D., 2FB Std.	800	0.0105	8.40	12 to 14
N322505803	--	4FB H.D., 2FB Std.	1300	0.0082	10.70	16 to 24
N4513760305	Plug-in base for PN-150HD; for #10 wire (ref. RSE 4R1)					
N4513760302	Plug-in base for PN-150HD; for #16 wire (ref. RSE 4R1)					
	Note (1): Value at which relay will become energized. Response will generally occur at some lower value.					

(See reverse side for general features of US&S electro-mechanical vital relays.)

UNION SWITCH & SIGNAL

RSE-4E2
Rev. 7-03

PN-150HD Biased Relay
(With Heavy Duty Contacts)

General Features of US&S PN-Series Electro-Mechanical Vital Relays

US&S vital and non-vital plug-in relays serve a multitude of functions in both railroad and transit control circuit applications. These time-proven relays are space-saving, easily installed or removed and can be handled in the field without disturbing coil or contact wiring.

In addition to production of PN-series electro-mechanical relays at the same high standards, US&S also provides high-quality remanufacturing services for these relays so that they can be returned to service in like-new condition. Refer to the "Remanufacturing Services" of this catalog or call 1-800-652-7276 for additional information.

Advantages

- Wide selection available for every application
- Meets or exceeds applicable AREMA (AAR) requirements
- Plug-in design permits quick installation or removal
- Indexed to assure proper mounting
- Sturdy plug-in base for every relay model
- Operates over wide temperature range

High Quality Design and Assembly

All components of US&S plug-in relays are constructed according to rigid quality control standards and are thoroughly tested before shipment. Coils are encapsulated for protection against mechanical damage and moisture. Magnetic circuits are constructed of non-aging materials. The air gap is not disturbed when the coil is removed or the contact springs adjusted. Those relays with an adjustable magnetic shunt may be adjusted for degree of magnetic hold-down force without changing the contact adjustment or the hold-down pole-piece position.

Contact fingers and springs utilize a simple, reliable design and are heat treated to assure uniformity of material and contact stability. The heavy contact fingers extend through the base to serve as plug connectors. Heel contacts are actuated by operating arms pivoted to the armature. Contact surfaces have sufficient wiping action to be self-cleaning. "Standard" contact materials include fine silver heels and backs, and silver-impregnated carbon (S.I.C.) fronts with a typical capacity of 4A @ 30 Vdc or 175 Vac. "Heavy Duty" (H.D.)" contact materials also include fine silver heels and backs and silver-impregnated carbon (S.I.C.) fronts with a typical capacity of 15A @30 Vdc or 175 Vac.

Other types of contact material for special application are described with the particular relay. Standard contacts are factory-adjusted to standard minimum opening and conform to AREMA (AAR) requirements.

All vital plug-in relays incorporate a transparent molded cover over the relay contacts and armature structure. The cover is sealed to the frame with a gaskethat assures a tight, dust-proof and moisture-proof seal.

Contact Designations

Front and back contacts of plug-in relays are designated "F" and "B", respectively. The dependent contacts are denoted FB, while the independent contacts are denoted "F" or "B" alone.

Testing

Many US&S vital relays are provided a front testing capability. The front testing facility is in series with the coil control circuit to permit deenergization of the relay while it is in its service mounting, without disturbing the relay or wiring. Testing may also be accomplished through the rear of the relay mounting base without opening a contact or coil circuit. Refer to ***RSE-4S1*** for special tools utilized in maintaining US&S plug-in relays.

Latch

A spring-operated latch holds each plug-in relay securely to its mounting base. The latch is released by pressing a button on the front of the relay.

Indexing

All plug-in relays are equipped with indexing pins to prevent insertion of an incorrect relay into the mounting base. Each relay is accompanied by an indexing plate that is applied to the base at the initial installation.

System Voltage

This voltage, which is listed in the relay ordering tabulation specifications, is prescribed for relays in locally energized circuits. Higher voltage may be used, if required, up to 10 watts power dissipation.

UNION SWITCH & SIGNAL

RSE-4E3
Rev. 7-03

PN-150BD 3-Position Biased Relay

General Description

The PN-150BD relay is a 3-position relay that is a combination of two biased relays to sense that a circuit is (a) deenergized, (b) energized with normal polarity, or (c) energized with reverse polarity. Each applied polarity energizes one of the biased armatures which, in turn, actuates three transfer contacts. Since a polarity change causes one set of front contacts to open before the other set closes, there is a short period when neither set is closed. Generally, a PN-150BSR relay (see ***RSE-4F1***) is used as a repeater to bridge the changeover when a continuous "circuit energized" output is required. Contacts of the PN-150BD relay are standard low voltage silver to silver-impregnated carbon front and silver-to-silver back.

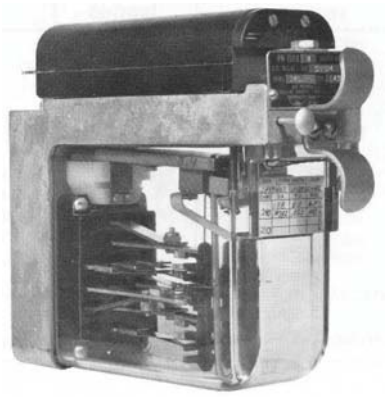

Specifications

- Refer to the ordering tabulation for operating specifications.

Ordering Information

- Standard relay and plug-in base order numbers listed in tabulation and ***RSE-4R1***.
- When writing your order, specify the required contacts and coil resistance.
- Relay bases are ordered separately. Indicate the type of relay to be used with that base.
- For detailed specifications and complete parts lists, request US&S Service Manual SM-4596D.

	PN-150BD Relays and Base								
US&S Order No.	Front Test	Contacts Normal	Contacts Reverse	Coil Res.	Energ. Amps (1)	Energ. Volts (1)	Working Volt.(2)	System Volt.	Notes
N322504701	X	3FB Std.	3FB Std.	100	0.0283	2.83	3.05	--	(3), (4)
N322504702	X	3FB Std.	3FB Std.	400	0.0141	5.65	6.08	10	(4)
N322504703	X	3FB Std.	3FB Std.	800	0.0112	8.95	9.67	12 to 14	(4)
N322504803	--	3FB Std.	3FB Std.	800	0.0112	8.95	9.67	12 to 14	(4)
N4513760302	Plug-In base for PN-150BD (ref. RSE 4R1)								
	Note (1): Value at which relay will become energized. Response will generally occur at some lower value. Note (2): Recommended working voltage for 0.9 sec. Reversal time. Note (3): Normally used in series with another relay. Note (4): Contacts - 1,4,5 FB normal; 2,3,6 FB reverse.								

(See reverse side for general features of US&S electro-mechanical vital relays.)

UNION SWITCH & SIGNAL

PN-150BD 3-Position Biased Relay

RSE-4E3
Rev. 7-03

General Features of US&S PN-Series Electro-Mechanical Vital Relays

US&S vital and non-vital plug-in relays serve a multitude of functions in both railroad and transit control circuit applications. These time-proven relays are space-saving, easily installed or removed and can be handled in the field without disturbing coil or contact wiring.

In addition to production of PN-series electro-mechanical relays at the same high standards, US&S also provides high-quality remanufacturing services for these relays so that they can be returned to service in like-new condition. Refer to the "Remanufacturing Services" of this catalog or call 1-800-652-7276 for additional information.

Advantages

- Wide selection available for every application
- Meets or exceeds applicable AREMA (AAR) requirements
- Plug-in design permits quick installation or removal
- Indexed to assure proper mounting
- Sturdy plug-in base for every relay model
- Operates over wide temperature range

High Quality Design and Assembly

All components of US&S plug-in relays are constructed according to rigid quality control standards and are thoroughly tested before shipment. Coils are encapsulated for protection against mechanical damage and moisture. Magnetic circuits are constructed of non-aging materials. The air gap is not disturbed when the coil is removed or the contact springs adjusted. Those relays with an adjustable magnetic shunt may be adjusted for degree of magnetic hold-down force without changing the contact adjustment or the hold-down pole-piece position.

Contact fingers and springs utilize a simple, reliable design and are heat treated to assure uniformity of material and contact stability. The heavy contact fingers extend through the base to serve as plug connectors. Heel contacts are actuated by operating arms pivoted to the armature. Contact surfaces have sufficient wiping action to be self-cleaning. "Standard" contact materials include fine silver heels and backs, and silver-impregnated carbon (S.I.C.) fronts with a typical capacity of 4A @ 30 Vdc or 175 Vac. "Heavy Duty" (H.D.)" contact materials also include fine silver heels and backs and silver-impregnated carbon (S.I.C.) fronts with a typical capacity of 15A @30 Vdc or 175 Vac.

Other types of contact material for special application are described with the particular relay. Standard contacts are factory-adjusted to standard minimum opening and conform to AREMA (AAR) requirements.

All vital plug-in relays incorporate a transparent molded cover over the relay contacts and armature structure. The cover is sealed to the frame with a gaskethat assures a tight, dust-proof and moisture-proof seal.

Contact Designations

Front and back contacts of plug-in relays are designated "F" and "B", respectively. The dependent contacts are denoted FB, while the independent contacts are denoted "F" or "B" alone.

Testing

Many US&S vital relays are provided a front testing capability. The front testing facility is in series with the coil control circuit to permit deenergization of the relay while it is in its service mounting, without disturbing the relay or wiring. Testing may also be accomplished through the rear of the relay mounting base without opening a contact or coil circuit. Refer to ***RSE-4S1*** for special tools utilized in maintaining US&S plug-in relays.

Latch

A spring-operated latch holds each plug-in relay securely to its mounting base. The latch is released by pressing a button on the front of the relay.

Indexing

All plug-in relays are equipped with indexing pins to prevent insertion of an incorrect relay into the mounting base. Each relay is accompanied by an indexing plate that is applied to the base at the initial installation.

System Voltage

This voltage, which is listed in the relay ordering tabulation specifications, is prescribed for relays in locally energized circuits. Higher voltage may be used, if required, up to 10 watts power dissipation.

UNION SWITCH & SIGNAL

RSE-4E4
Rev. 7-03

PN-250B Biased Relay

General Description

The PN-250B relay is biased relay designed for use in line and logic circuits. It is used in place of the PN-150B relay when additional contacts are required. Coils of this relay may be externally connected in series or in multiple. For a relay that operates on lower energization values, the PN-250BE relay is recommended (see ***RSE-4M4***). Contacts of the PN-250B relay are standard low voltage silver to silver-impregnated carbon front and silver-to-silver back. All PN-250B relays incorporate Lexan® covers.

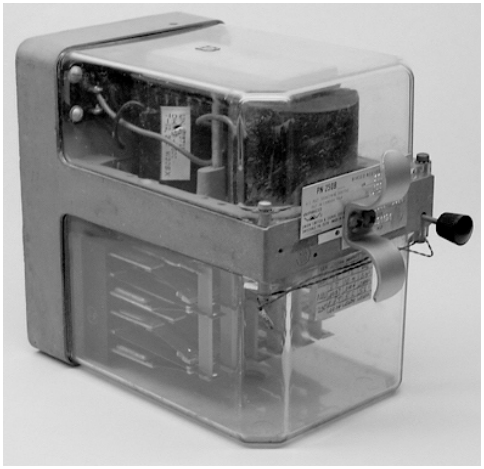

Specifications

- Refer to the ordering tabulation for operating specifications.

Ordering Information

- Standard relay and plug-in base order numbers listed in tabulation and ***RSE-4R1***.
- When writing your order, specify the required contacts and coil resistance.
- Relay bases are ordered separately. Indicate the type of relay to be used with that base.
- For detailed specifications and complete parts lists, request US&S Service Manual SM-4597.

	PN-250B Relays and Base								
US&S Order No.	Front Test	Contacts	Coil Res: Series	Coil Res: Multi	Series Enrg: Amps	Series Enrg: Volt.	Multi Enrg: Amps	Multi Enrg: Volt.	System Volt.
N322554701	X	6FB, 6F, 3B Std.	1000	250	0.0104	10.43	0.0200	5.25	16 to 24
N322554702	X	8FB, 4F, 2B Std.	1000	250	0.0209	5.22	0.0209	5.22	10 to 14
N322554802	--	8FB, 4F, 2B Std.	1000	250	0.0209	5.22	0.0209	5.22	10 to 14
N438689003	Plug-In base for PN-250B (ref. RSE-4R1)								
	General note: Energization - value at which relay will become energized. Response will generally occur at some lower value. Note (1): Contacts - 1 through 6: FB; 7 through 12: F; 13 through 15: B Note (2): Contacts - 1,3,4,6,8,10, 11, 13: FB; 2,7,9,14: F; 5,12: B								

(See reverse side for general features of US&S electro-mechanical vital relays.)

UNION SWITCH & SIGNAL

PN-250B Biased Relay

RSE-4E4
Rev. 7-03

General Features of US&S PN-Series Electro-Mechanical Vital Relays

US&S vital and non-vital plug-in relays serve a multitude of functions in both railroad and transit control circuit applications. These time-proven relays are space-saving, easily installed or removed and can be handled in the field without disturbing coil or contact wiring.

In addition to production of PN-series electro-mechanical relays at the same high standards, US&S also provides high-quality remanufacturing services for these relays so that they can be returned to service in like-new condition. Refer to the "Remanufacturing Services" of this catalog or call 1-800-652-7276 for additional information.

Advantages

- Wide selection available for every application
- Meets or exceeds applicable AREMA (AAR) requirements
- Plug-in design permits quick installation or removal
- Indexed to assure proper mounting
- Sturdy plug-in base for every relay model
- Operates over wide temperature range

High Quality Design and Assembly

All components of US&S plug-in relays are constructed according to rigid quality control standards and are thoroughly tested before shipment. Coils are encapsulated for protection against mechanical damage and moisture. Magnetic circuits are constructed of non-aging materials. The air gap is not disturbed when the coil is removed or the contact springs adjusted. Those relays with an adjustable magnetic shunt may be adjusted for degree of magnetic hold-down force without changing the contact adjustment or the hold-down pole-piece position.

Contact fingers and springs utilize a simple, reliable design and are heat treated to assure uniformity of material and contact stability. The heavy contact fingers extend through the base to serve as plug connectors. Heel contacts are actuated by operating arms pivoted to the armature. Contact surfaces have sufficient wiping action to be self-cleaning. "Standard" contact materials include fine silver heels and backs, and silver-impregnated carbon (S.I.C.) fronts with a typical capacity of 4A @ 30 Vdc or 175 Vac. "Heavy Duty" (H.D.)" contact materials also include fine silver heels and backs and silver-impregnated carbon (S.I.C.) fronts with a typical capacity of 15A @30 Vdc or 175 Vac.

Other types of contact material for special application are described with the particular relay. Standard contacts are factory-adjusted to standard minimum opening and conform to AREMA (AAR) requirements.

All vital plug-in relays incorporate a transparent molded cover over the relay contacts and armature structure. The cover is sealed to the frame with a gaskethat assures a tight, dust-proof and moisture-proof seal.

Contact Designations

Front and back contacts of plug-in relays are designated "F" and "B", respectively. The dependent contacts are denoted FB, while the independent contacts are denoted "F" or "B" alone.

Testing

Many US&S vital relays are provided a front testing capability. The front testing facility is in series with the coil control circuit to permit deenergization of the relay while it is in its service mounting, without disturbing the relay or wiring. Testing may also be accomplished through the rear of the relay mounting base without opening a contact or coil circuit. Refer to ***RSE-4S1*** for special tools utilized in maintaining US&S plug-in relays.

Latch

A spring-operated latch holds each plug-in relay securely to its mounting base. The latch is released by pressing a button on the front of the relay.

Indexing

All plug-in relays are equipped with indexing pins to prevent insertion of an incorrect relay into the mounting base. Each relay is accompanied by an indexing plate that is applied to the base at the initial installation.

System Voltage

This voltage, which is listed in the relay ordering tabulation specifications, is prescribed for relays in locally energized circuits. Higher voltage may be used, if required, up to 10 watts power dissipation.

UNION SWITCH & SIGNAL

RSE-4F1
Rev. 7-03

PN-150BSR Slow Release Biased Relay

General Description

The PN-150BSR relay is a slow release biased relay that remains in the energized position approximately 1 second after control energy is removed. This feature is used to bridge the transfer time of the controlling relay contacts to prevent loss of information. A typical example is the bridging of the changeover time of a PN-150BD relay from normal to reverse (or vice-versa). For longer delay time, refer to the PN-259BSR relay in ***RSE-4F4*** and PN-259SRA relay in ***RSE-4F5***. Contacts are low-voltage silver to silver-impregnated front and silver to silver back.

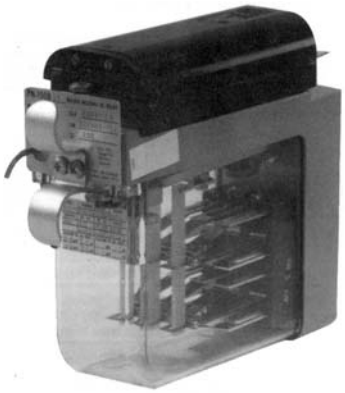

Specifications

- Refer to the ordering tabulation for operating specifications.

Ordering Information

- Standard relay and plug-in base order numbers listed in tabulation and ***RSE-4R1***.
- When writing your order, specify the required contacts and coil resistance.
- Relay bases are ordered separately. Indicate the type of relay to be used with that base.
- For detailed specifications and complete parts lists, request US&S Service Manual SM-4596B.

	PN-150BSR Relays and Base								
US&S Order No.	Front Test	Contacts	Coil Res.	Energ. Amps (1)	Energ. Volts (1)	Min. D.A. Time (2)	Min. D.A. Time (3)	System Volt.	Notes
N322503701	X	6FB Std.	100	0.0345	3.45	4.7	5.6	10	(4)
N322503702	X	6FB Std.	250	0.0223	5.58	7.5	9.0	12 to 16	(4)
N322503802	--	6FB Std.	250	0.0223	5.58	7.5	9.8	12 to 16	(4)
N322503804	--	4FB, 2F, 1B Std.	250	0.0223	5.58	7.5	9.0	12 to 16	(5)
N4513760302	Plug-In base for PN-150BSR (ref. RSE-4R1)								
	Note (1): Value at which relay will become energized. Response will generally occur at some lower value. Note (2): 0.8 sec. @V Note (3): 1.0 sec. @V Note (4): Contacts - 6FB, 1 through 6: FB Note (5): Contacts - 4FB, 2F, 1B; 1,3,4,6: FB; 2,7: F; 5: B								

(See reverse side for general features of US&S electro-mechanical vital relays.)

UNION SWITCH & SIGNAL

PN-150BSR Slow Release Biased Relay

RSE-4F1
Rev. 7-03

General Features of US&S PN-Series Electro-Mechanical Vital Relays

US&S vital and non-vital plug-in relays serve a multitude of functions in both railroad and transit control circuit applications. These time-proven relays are space-saving, easily installed or removed and can be handled in the field without disturbing coil or contact wiring.

In addition to production of PN-series electro-mechanical relays at the same high standards, US&S also provides high-quality remanufacturing services for these relays so that they can be returned to service in like-new condition. Refer to the "Remanufacturing Services" of this catalog or call 1-800-652-7276 for additional information.

Advantages

- Wide selection available for every application
- Meets or exceeds applicable AREMA (AAR) requirements
- Plug-in design permits quick installation or removal
- Indexed to assure proper mounting
- Sturdy plug-in base for every relay model
- Operates over wide temperature range

High Quality Design and Assembly

All components of US&S plug-in relays are constructed according to rigid quality control standards and are thoroughly tested before shipment. Coils are encapsulated for protection against mechanical damage and moisture. Magnetic circuits are constructed of non-aging materials. The air gap is not disturbed when the coil is removed or the contact springs adjusted. Those relays with an adjustable magnetic shunt may be adjusted for degree of magnetic hold-down force without changing the contact adjustment or the hold-down pole-piece position.

Contact fingers and springs utilize a simple, reliable design and are heat treated to assure uniformity of material and contact stability. The heavy contact fingers extend through the base to serve as plug connectors. Heel contacts are actuated by operating arms pivoted to the armature. Contact surfaces have sufficient wiping action to be self-cleaning. "Standard" contact materials include fine silver heels and backs, and silver-impregnated carbon (S.I.C.) fronts with a typical capacity of 4A @ 30 Vdc or 175 Vac. "Heavy Duty" (H.D.)" contact materials also include fine silver heels and backs and silver-impregnated carbon (S.I.C.) fronts with a typical capacity of 15A @30 Vdc or 175 Vac.

Other types of contact material for special application are described with the particular relay. Standard contacts are factory-adjusted to standard minimum opening and conform to AREMA (AAR) requirements.

All vital plug-in relays incorporate a transparent molded cover over the relay contacts and armature structure. The cover is sealed to the frame with a gaskethat assures a tight, dust-proof and moisture-proof seal.

Contact Designations

Front and back contacts of plug-in relays are designated "F" and "B", respectively. The dependent contacts are denoted FB, while the independent contacts are denoted "F" or "B" alone.

Testing

Many US&S vital relays are provided a front testing capability. The front testing facility is in series with the coil control circuit to permit deenergization of the relay while it is in its service mounting, without disturbing the relay or wiring. Testing may also be accomplished through the rear of the relay mounting base without opening a contact or coil circuit. Refer to ***RSE-4S1*** for special tools utilized in maintaining US&S plug-in relays.

Latch

A spring-operated latch holds each plug-in relay securely to its mounting base. The latch is released by pressing a button on the front of the relay.

Indexing

All plug-in relays are equipped with indexing pins to prevent insertion of an incorrect relay into the mounting base. Each relay is accompanied by an indexing plate that is applied to the base at the initial installation.

System Voltage

This voltage, which is listed in the relay ordering tabulation specifications, is prescribed for relays in locally energized circuits. Higher voltage may be used, if required, up to 10 watts power dissipation.

UNION SWITCH & SIGNAL

PN-258B Slow Pick-Up Biased Relay

General Description

The PN-258B relay is a slow pick-up biased relay that has a delayed response to energization of approximately 1 second, depending on the voltage applied. The release is the same as a standard relay. Contacts are low-voltage silver to silver-impregnated front and silver to silver back.



Specifications

- Refer to the ordering tabulation for operating specifications.

Ordering Information

- Standard relay and plug-in base order numbers listed in tabulation and ***RSE-4R1***.
- When writing your order, specify the required contacts and coil resistance.
- Relay bases are ordered separately. Indicate the type of relay to be used with that base.
- For detailed specifications and complete parts lists, request US&S Service Manual SM-4597.

	PN-258B Relays and Base								
US&S Order No.	Front Test	Contacts	Coil Res.	Energ. Amps (1)	Energ. Volts (1)	Min. P.U. Time (2)	Min. P.U. Time (3)	Serv. Energ. (4)	System Volt.
N322551701	X	6FB Std.	1400	0.0055	7.5	1.05	0.85	10	10
N322551703	X	6FB Std.	2000	0.0045	9.0	1.05	0.85	12	12
N322551803	--	6FB Std.	2000	0.0045	9.0	1.05	0.85	12	12
N438689001	Plug-In base for PN-258B (ref. RSE4R1)								
	Note (1): Value at which relay may not become energized. Response will generally occur at some lower value. Note (2): @100% service energy. Note (3): @110% service energy. Note (4): Service energization volts: Recommended voltage to ensure a one second delay.								

(See reverse side for general features of US&S electro-mechanical vital relays.)

UNION SWITCH & SIGNAL

PN-258B Slow Pick-Up Biased Relay

RSE-4F2
Rev. 7-03

General Features of US&S PN-Series Electro-Mechanical Vital Relays

US&S vital and non-vital plug-in relays serve a multitude of functions in both railroad and transit control circuit applications. These time-proven relays are space-saving, easily installed or removed and can be handled in the field without disturbing coil or contact wiring.

In addition to production of PN-series electro-mechanical relays at the same high standards, US&S also provides high-quality remanufacturing services for these relays so that they can be returned to service in like-new condition. Refer to the "Remanufacturing Services" of this catalog or call 1-800-652-7276 for additional information.

Advantages

- Wide selection available for every application
- Meets or exceeds applicable AREMA (AAR) requirements
- Plug-in design permits quick installation or removal
- Indexed to assure proper mounting
- Sturdy plug-in base for every relay model
- Operates over wide temperature range

High Quality Design and Assembly

All components of US&S plug-in relays are constructed according to rigid quality control standards and are thoroughly tested before shipment. Coils are encapsulated for protection against mechanical damage and moisture. Magnetic circuits are constructed of non-aging materials. The air gap is not disturbed when the coil is removed or the contact springs adjusted. Those relays with an adjustable magnetic shunt may be adjusted for degree of magnetic hold-down force without changing the contact adjustment or the hold-down pole-piece position.

Contact fingers and springs utilize a simple, reliable design and are heat treated to assure uniformity of material and contact stability. The heavy contact fingers extend through the base to serve as plug connectors. Heel contacts are actuated by operating arms pivoted to the armature. Contact surfaces have sufficient wiping action to be self-cleaning. "Standard" contact materials include fine silver heels and backs, and silver-impregnated carbon (S.I.C.) fronts with a typical capacity of 4A @ 30 Vdc or 175 Vac. "Heavy Duty" (H.D.)" contact materials also include fine silver heels and backs and silver-impregnated carbon (S.I.C.) fronts with a typical capacity of 15A @30 Vdc or 175 Vac.

Other types of contact material for special application are described with the particular relay. Standard contacts are factory-adjusted to standard minimum opening and conform to AREMA (AAR) requirements.

All vital plug-in relays incorporate a transparent molded cover over the relay contacts and armature structure. The cover is sealed to the frame with a gaskethat assures a tight, dust-proof and moisture-proof seal.

Contact Designations

Front and back contacts of plug-in relays are designated "F" and "B", respectively. The dependent contacts are denoted FB, while the independent contacts are denoted "F" or "B" alone.

Testing

Many US&S vital relays are provided a front testing capability. The front testing facility is in series with the coil control circuit to permit deenergization of the relay while it is in its service mounting, without disturbing the relay or wiring. Testing may also be accomplished through the rear of the relay mounting base without opening a contact or coil circuit. Refer to ***RSE-4S1*** for special tools utilized in maintaining US&S plug-in relays.

Latch

A spring-operated latch holds each plug-in relay securely to its mounting base. The latch is released by pressing a button on the front of the relay.

Indexing

All plug-in relays are equipped with indexing pins to prevent insertion of an incorrect relay into the mounting base. Each relay is accompanied by an indexing plate that is applied to the base at the initial installation.

System Voltage

This voltage, which is listed in the relay ordering tabulation specifications, is prescribed for relays in locally energized circuits. Higher voltage may be used, if required, up to 10 watts power dissipation.

UNION SWITCH & SIGNAL

PN-258BSR Slow Pick-Up/Slow Release Biased Relay

General Description

The PN-258BSR is a slow pick-up and a slow release biased relay. The delayed response to energization is approximately 2 seconds, and 1 second to deenergization. Note in the PN-258BSR tabulation that these times vary with the applied voltage. Contacts are low-voltage silver to silver-impregnated front and silver-to-silver back.

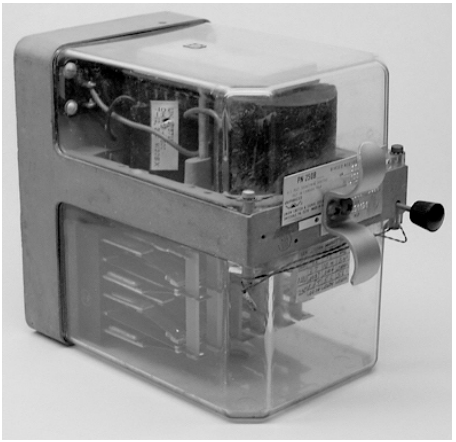

Specifications

- Refer to the ordering tabulation for operating specifications.

Ordering Information

- Standard relay and plug-in base order numbers listed in tabulation and ***RSE-4R1***.
- When writing your order, specify the required contacts and coil resistance.
- Relay bases are ordered separately. Indicate the type of relay to be used with that base.
- For detailed specifications and complete parts lists, request US&S Service Manual SM-4597.

	PN-258BSR Relays and Base								
US&S Order No.	Contacts	Coil Res.	Energ. Amps (1)	Energ. Volts (1)	Service Enrg.	Min. P.U. Time (2)	Min. P.U. Time (3)	Min. D.A. Time (2)	Min. D.A. Time(3)
N322551702	6FB Std.	350	0.0214	7.50	10.00	2.2	1.8	1.1	0.7
N322551705	6FB Std.	500	0.0180	9.01	12.00	2.2	1.8	1.1	0.7
N438689001	Plug-In base for PN-258BSR (ref. RSE 4R1)								
	Note (1): Values below which relay may not become energized. Note (2): @100% service Note (3): @110% service								

(See reverse side for general features of US&S electro-mechanical vital relays.)

UNION SWITCH & SIGNAL

PN-258BSR Slow Pick-Up/Slow Release Biased Relay

RSE-4F3
Rev. 7-03

General Features of US&S PN-Series Electro-Mechanical Vital Relays

US&S vital and non-vital plug-in relays serve a multitude of functions in both railroad and transit control circuit applications. These time-proven relays are space-saving, easily installed or removed and can be handled in the field without disturbing coil or contact wiring.

In addition to production of PN-series electro-mechanical relays at the same high standards, US&S also provides high-quality remanufacturing services for these relays so that they can be returned to service in like-new condition. Refer to the "Remanufacturing Services" of this catalog or call 1-800-652-7276 for additional information.

Advantages

- Wide selection available for every application
- Meets or exceeds applicable AREMA (AAR) requirements
- Plug-in design permits quick installation or removal
- Indexed to assure proper mounting
- Sturdy plug-in base for every relay model
- Operates over wide temperature range

High Quality Design and Assembly

All components of US&S plug-in relays are constructed according to rigid quality control standards and are thoroughly tested before shipment. Coils are encapsulated for protection against mechanical damage and moisture. Magnetic circuits are constructed of non-aging materials. The air gap is not disturbed when the coil is removed or the contact springs adjusted. Those relays with an adjustable magnetic shunt may be adjusted for degree of magnetic hold-down force without changing the contact adjustment or the hold-down pole-piece position.

Contact fingers and springs utilize a simple, reliable design and are heat treated to assure uniformity of material and contact stability. The heavy contact fingers extend through the base to serve as plug connectors. Heel contacts are actuated by operating arms pivoted to the armature. Contact surfaces have sufficient wiping action to be self-cleaning. "Standard" contact materials include fine silver heels and backs, and silver-impregnated carbon (S.I.C.) fronts with a typical capacity of 4A @ 30 Vdc or 175 Vac. "Heavy Duty" (H.D.)" contact materials also include fine silver heels and backs and silver-impregnated carbon (S.I.C.) fronts with a typical capacity of 15A @30 Vdc or 175 Vac.

Other types of contact material for special application are described with the particular relay. Standard contacts are factory-adjusted to standard minimum opening and conform to AREMA (AAR) requirements.

All vital plug-in relays incorporate a transparent molded cover over the relay contacts and armature structure. The cover is sealed to the frame with a gaskethat assures a tight, dust-proof and moisture-proof seal.

Contact Designations

Front and back contacts of plug-in relays are designated "F" and "B", respectively. The dependent contacts are denoted FB, while the independent contacts are denoted "F" or "B" alone.

Testing

Many US&S vital relays are provided a front testing capability. The front testing facility is in series with the coil control circuit to permit deenergization of the relay while it is in its service mounting, without disturbing the relay or wiring. Testing may also be accomplished through the rear of the relay mounting base without opening a contact or coil circuit. Refer to ***RSE-4S1*** for special tools utilized in maintaining US&S plug-in relays.

Latch

A spring-operated latch holds each plug-in relay securely to its mounting base. The latch is released by pressing a button on the front of the relay.

Indexing

All plug-in relays are equipped with indexing pins to prevent insertion of an incorrect relay into the mounting base. Each relay is accompanied by an indexing plate that is applied to the base at the initial installation.

System Voltage

This voltage, which is listed in the relay ordering tabulation specifications, is prescribed for relays in locally energized circuits. Higher voltage may be used, if required, up to 10 watts power dissipation.

UNION SWITCH & SIGNAL

RSE-4F4
Rev. 7-03

PN-259BSR Slow Release Biased Relay
(With Delayed Deenergization Response)

General Description

The PN-259BSR relay is a slow release biased relay that has a delayed response to deenergization of 2.75 to 3.5 seconds. This relay is equipped with six standard transfer (FB) contacts capable of carrying up to 4 amperes. When used for a crossing gate delay, its control is arranged to snub its coil upon deenergization. Heavy duty (HD) contacts are silver to silver impregnated carbon front and silver-to-silver back. Standard contacts are low-voltage silver to silver-impregnated front and silver to silver back.



Specifications

- Refer to the ordering tabulation for operating specifications.

Ordering Information

- Standard relay and plug-in base order numbers listed in tabulation and ***RSE-4R1***.
- When writing your order, specify the required contacts and coil resistance.
- Relay bases are ordered separately. Indicate the type of relay to be used with that base.
- For detailed specifications and complete parts lists, request US&S Service Manual SM-4597.

	PN-259BSR Relay and Base						
US&S Order No.	Contacts	Coil Res.	Energ. Amps	Energ. Volts	Sys. Enrg. Amp (1)	Sys. Enrg. V (1)	System Volt.
N322552702	6FB Std.	225	0.0222	5.0	0.0355	8.0	12
N438689001	Plug-In base for PN-259BSR (ref. RSE 4R1)						
	Note (1): System energization for 2.75 to 3.5 sec. Drop-away time.						

(See reverse side for general features of US&S electro-mechanical vital relays.)

UNION SWITCH & SIGNAL

RSE-4F4
Rev. 7-03

PN-259BSR Slow Release Biased Relay
(With Delayed Deenergization Response)

General Features of US&S PN-Series Electro-Mechanical Vital Relays

US&S vital and non-vital plug-in relays serve a multitude of functions in both railroad and transit control circuit applications. These time-proven relays are space-saving, easily installed or removed and can be handled in the field without disturbing coil or contact wiring.

In addition to production of PN-series electro-mechanical relays at the same high standards, US&S also provides high-quality remanufacturing services for these relays so that they can be returned to service in like-new condition. Refer to the "Remanufacturing Services" of this catalog or call 1-800-652-7276 for additional information.

Advantages

- Wide selection available for every application
- Meets or exceeds applicable AREMA (AAR) requirements
- Plug-in design permits quick installation or removal
- Indexed to assure proper mounting
- Sturdy plug-in base for every relay model
- Operates over wide temperature range

High Quality Design and Assembly

All components of US&S plug-in relays are constructed according to rigid quality control standards and are thoroughly tested before shipment. Coils are encapsulated for protection against mechanical damage and moisture. Magnetic circuits are constructed of non-aging materials. The air gap is not disturbed when the coil is removed or the contact springs adjusted. Those relays with an adjustable magnetic shunt may be adjusted for degree of magnetic hold-down force without changing the contact adjustment or the hold-down pole-piece position.

Contact fingers and springs utilize a simple, reliable design and are heat treated to assure uniformity of material and contact stability. The heavy contact fingers extend through the base to serve as plug connectors. Heel contacts are actuated by operating arms pivoted to the armature. Contact surfaces have sufficient wiping action to be self-cleaning. "Standard" contact materials include fine silver heels and backs, and silver-impregnated carbon (S.I.C.) fronts with a typical capacity of 4A @ 30 Vdc or 175 Vac. "Heavy Duty" (H.D.)" contact materials also include fine silver heels and backs and silver-impregnated carbon (S.I.C.) fronts with a typical capacity of 15A @30 Vdc or 175 Vac.

Other types of contact material for special application are described with the particular relay. Standard contacts are factory-adjusted to standard minimum opening and conform to AREMA (AAR) requirements.

All vital plug-in relays incorporate a transparent molded cover over the relay contacts and armature structure. The cover is sealed to the frame with a gaskethat assures a tight, dust-proof and moisture-proof seal.

Contact Designations

Front and back contacts of plug-in relays are designated "F" and "B", respectively. The dependent contacts are denoted FB, while the independent contacts are denoted "F" or "B" alone.

Testing

Many US&S vital relays are provided a front testing capability. The front testing facility is in series with the coil control circuit to permit deenergization of the relay while it is in its service mounting, without disturbing the relay or wiring. Testing may also be accomplished through the rear of the relay mounting base without opening a contact or coil circuit. Refer to ***RSE-4S1*** for special tools utilized in maintaining US&S plug-in relays.

Latch

A spring-operated latch holds each plug-in relay securely to its mounting base. The latch is released by pressing a button on the front of the relay.

Indexing

All plug-in relays are equipped with indexing pins to prevent insertion of an incorrect relay into the mounting base. Each relay is accompanied by an indexing plate that is applied to the base at the initial installation.

System Voltage

This voltage, which is listed in the relay ordering tabulation specifications, is prescribed for relays in locally energized circuits. Higher voltage may be used, if required, up to 10 watts power dissipation.

UNION SWITCH & SIGNAL

RSE-4F5
Rev. 7-03

PN-259SRA Slow Release Biased Relay
(With Delayed Deenergization Response)

General Description

The PN-259SRA relay is a slow release biased relay that has a delayed response to deenergization of 2.75 to 3.5 seconds. It is equipped with four heavy duty transfer contacts capable of carrying up to 15 amperes. This relay is typically used to delay the release of highway crossing gates, although it is not restricted to that purpose. When used for a crossing gate delay, its control is arranged to snub its coil upon deenergization. Heavy duty (HD) contacts are silver to silver-impregnated carbon front and silver-to-silver back. Standard contacts are low-voltage silver-to-silver-impregnated front and silver to silver back.

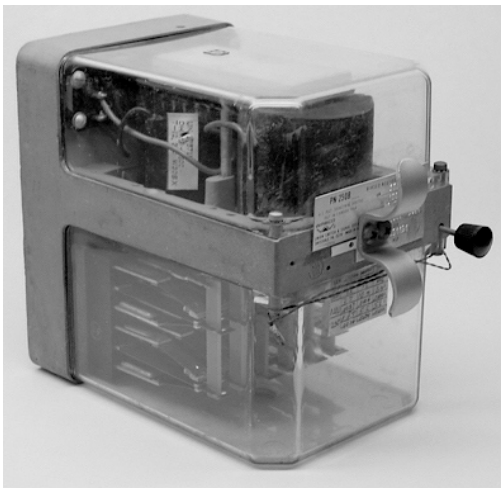

Specifications

- Refer to the ordering tabulation for operating specifications.

Ordering Information

- Standard relay and plug-in base order numbers listed in tabulation and ***RSE-4R1***.
- When writing your order, specify the required contacts and coil resistance.
- Relay bases are ordered separately. Indicate the type of relay to be used with that base.
- For detailed specifications and complete parts lists, request US&S Service Manual SM-4563H.

	PN-259SRA Relay and Base						
US&S Order No.	Contacts	Coil Res.	Energ. Amps	Energ. Volts	Sys. Enrg. Amp (1)	Sys. Enrg. V (1)	System Volt.
N322562-001	4 FB H.D.	225	0.0222	5.0	0.0355	8.0	12
N438689001	Plug-In base for PN-259SRA (ref. RSE4R1)						
	Note (1): System energization for 2.75 to 3.5 sec. drop-away time.						

(See reverse side for general features of US&S electro-mechanical vital relays.)

UNION SWITCH & SIGNAL

RSE-4F5
Rev. 7-03

PN-259SRA Slow Release Biased Relay
(With Delayed Deenergization Response)

General Features of US&S PN-Series Electro-Mechanical Vital Relays

US&S vital and non-vital plug-in relays serve a multitude of functions in both railroad and transit control circuit applications. These time-proven relays are space-saving, easily installed or removed and can be handled in the field without disturbing coil or contact wiring.

In addition to production of PN-series electro-mechanical relays at the same high standards, US&S also provides high-quality remanufacturing services for these relays so that they can be returned to service in like-new condition. Refer to the "Remanufacturing Services" of this catalog or call 1-800-652-7276 for additional information.

Advantages

- Wide selection available for every application
- Meets or exceeds applicable AREMA (AAR) requirements
- Plug-in design permits quick installation or removal
- Indexed to assure proper mounting
- Sturdy plug-in base for every relay model
- Operates over wide temperature range

High Quality Design and Assembly

All components of US&S plug-in relays are constructed according to rigid quality control standards and are thoroughly tested before shipment. Coils are encapsulated for protection against mechanical damage and moisture. Magnetic circuits are constructed of non-aging materials. The air gap is not disturbed when the coil is removed or the contact springs adjusted. Those relays with an adjustable magnetic shunt may be adjusted for degree of magnetic hold-down force without changing the contact adjustment or the hold-down pole-piece position.

Contact fingers and springs utilize a simple, reliable design and are heat treated to assure uniformity of material and contact stability. The heavy contact fingers extend through the base to serve as plug connectors. Heel contacts are actuated by operating arms pivoted to the armature. Contact surfaces have sufficient wiping action to be self-cleaning. "Standard" contact materials include fine silver heels and backs, and silver-impregnated carbon (S.I.C.) fronts with a typical capacity of 4A @ 30 Vdc or 175 Vac. "Heavy Duty" (H.D.)" contact materials also include fine silver heels and backs and silver-impregnated carbon (S.I.C.) fronts with a typical capacity of 15A @30 Vdc or 175 Vac.

Other types of contact material for special application are described with the particular relay. Standard contacts are factory-adjusted to standard minimum opening and conform to AREMA (AAR) requirements.

All vital plug-in relays incorporate a transparent molded cover over the relay contacts and armature structure. The cover is sealed to the frame with a gaskethat assures a tight, dust-proof and moisture-proof seal.

Contact Designations

Front and back contacts of plug-in relays are designated "F" and "B", respectively. The dependent contacts are denoted FB, while the independent contacts are denoted "F" or "B" alone.

Testing

Many US&S vital relays are provided a front testing capability. The front testing facility is in series with the coil control circuit to permit deenergization of the relay while it is in its service mounting, without disturbing the relay or wiring. Testing may also be accomplished through the rear of the relay mounting base without opening a contact or coil circuit. Refer to ***RSE-4S1*** for special tools utilized in maintaining US&S plug-in relays.

Latch

A spring-operated latch holds each plug-in relay securely to its mounting base. The latch is released by pressing a button on the front of the relay.

Indexing

All plug-in relays are equipped with indexing pins to prevent insertion of an incorrect relay into the mounting base. Each relay is accompanied by an indexing plate that is applied to the base at the initial installation.

System Voltage

This voltage, which is listed in the relay ordering tabulation specifications, is prescribed for relays in locally energized circuits. Higher voltage may be used, if required, up to 10 watts power dissipation.

UNION SWITCH & SIGNAL

RSE-4G1
Rev. 7-03

PN-150BTR Biased Track Relay

General Description

The PN-150BTR is a biased relay with special characteristics for use as a track relay. External resistors may be required to adjust each track circuit to obtain proper train-shunting characteristics (refer to PN-150BH relays; ***RSE-4G2***). The PN-150BTR relay is equipped with standard low voltage silver to silver-impregnated carbon front and silver-to-silver back contacts.

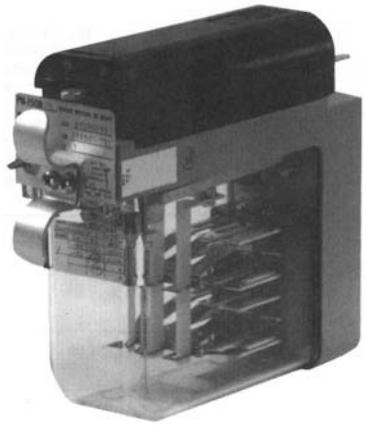

Specifications

- Refer to the ordering tabulation for operating specifications.

Ordering Information

- Standard relay and plug-in base order numbers listed in tabulation and ***RSE-4R1***.
- When writing your order, specify the required contacts and coil resistance.
- Relay bases are ordered separately. Indicate the type of relay to be used with that base.
- For detailed specifications and complete parts lists, request US&S Service Manual SM-4596A.

	PN-150BTR Relay and Base					
US&S Order No.	Contacts	Coil Res.	Min. D.A. Amps	Min. D.A. Volts	Energ. Amps (1)	Energ. Volts (1)
N322501701	6FB Std.	1.0	0.132	0.132	0.250	0.25
N322501702	6FB Std.	4.0	0.069	0.276	0.131	0.52
N322501704	6FB Std.	2.0	0.091	1.182	0.173	0.35
N322501705	6FB Std.	13.0	0.037	0.390	0.071	0.92
N4513760302	Plug-In base for PN-150BTR (ref. RSE-4R1)					
	Note (1): Value at which relay will become energized. Response will generally occur at some lower value.					

(See reverse side for general features of US&S electro-mechanical vital relays.)

UNION SWITCH & SIGNAL

PN-150BTR Biased Track Relay

RSE-4G1
Rev. 7-03

General Features of US&S PN-Series Electro-Mechanical Vital Relays

US&S vital and non-vital plug-in relays serve a multitude of functions in both railroad and transit control circuit applications. These time-proven relays are space-saving, easily installed or removed and can be handled in the field without disturbing coil or contact wiring.

In addition to production of PN-series electro-mechanical relays at the same high standards, US&S also provides high-quality remanufacturing services for these relays so that they can be returned to service in like-new condition. Refer to the "Remanufacturing Services" of this catalog or call 1-800-652-7276 for additional information.

Advantages

- Wide selection available for every application
- Meets or exceeds applicable AREMA (AAR) requirements
- Plug-in design permits quick installation or removal
- Indexed to assure proper mounting
- Sturdy plug-in base for every relay model
- Operates over wide temperature range

High Quality Design and Assembly

All components of US&S plug-in relays are constructed according to rigid quality control standards and are thoroughly tested before shipment. Coils are encapsulated for protection against mechanical damage and moisture. Magnetic circuits are constructed of non-aging materials. The air gap is not disturbed when the coil is removed or the contact springs adjusted. Those relays with an adjustable magnetic shunt may be adjusted for degree of magnetic hold-down force without changing the contact adjustment or the hold-down pole-piece position.

Contact fingers and springs utilize a simple, reliable design and are heat treated to assure uniformity of material and contact stability. The heavy contact fingers extend through the base to serve as plug connectors. Heel contacts are actuated by operating arms pivoted to the armature. Contact surfaces have sufficient wiping action to be self-cleaning. "Standard" contact materials include fine silver heels and backs, and silver-impregnated carbon (S.I.C.) fronts with a typical capacity of 4A @ 30 Vdc or 175 Vac. "Heavy Duty" (H.D.)" contact materials also include fine silver heels and backs and silver-impregnated carbon (S.I.C.) fronts with a typical capacity of 15A @30 Vdc or 175 Vac.

Other types of contact material for special application are described with the particular relay. Standard contacts are factory-adjusted to standard minimum opening and conform to AREMA (AAR) requirements.

vital plug-in relays incorporate a transparent molded cover over the relay contacts and armature structure. The cover is sealed to the frame with a gaskethat assures a tight, dust-proof and moisture-proof seal.

Contact Designations

Front and back contacts of plug-in relays are designated "F" and "B", respectively. The dependent contacts are denoted FB, while the independent contacts are denoted "F" or "B" alone.

Testing

Many US&S vital relays are provided a front testing capability. The front testing facility is in series with the coil control circuit to permit deenergization of the relay while it is in its service mounting, without disturbing the relay or wiring. Testing may also be accomplished through the rear of the relay mounting base without opening a contact or coil circuit. Refer to ***RSE-4S1*** for special tools utilized in maintaining US&S plug-in relays.

Latch

A spring-operated latch holds each plug-in relay securely to its mounting base. The latch is released by pressing a button on the front of the relay.

Indexing

All plug-in relays are equipped with indexing pins to prevent insertion of an incorrect relay into the mounting base. Each relay is accompanied by an indexing plate that is applied to the base at the initial installation.

System Voltage

This voltage, which is listed in the relay ordering tabulation specifications, is prescribed for relays in locally energized circuits. Higher voltage may be used, if required, up to 10 watts power dissipation.

UNION SWITCH & SIGNAL

RSE-4G2
Rev. 7-03

PN-150BH Biased Track Circuit Relay

General Description

The PN-150BH is a biased high drop-away relay designed for use in track circuits. It has the special characteristic of minimum release at about 75% of the energization value. This results in better shunting characteristics than can be obtained with the PN-150BTR relay. In order to achieve close tolerances (see tabulation), a special contact arrangement of one transfer, one front and one contact is used. If more contacts are required, a PN-150B relay (see ***RSE-4E1***) can be used as a repeater. The PN-150BH relay is equipped with standard low voltage silver to silver-impregnated carbon front and silver-to-silver back contacts. All PN-150BH relays incorporate front testing.

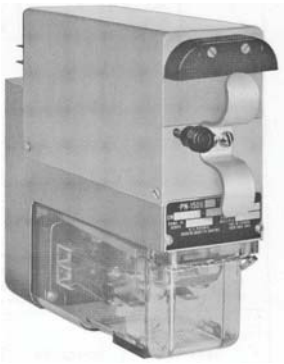

Specifications and Applications

- Refer to the ordering tabulation for operating specifications and additional application notes.

Ordering Information

- Standard relay and plug-in base order numbers listed in tabulation and ***RSE-4R1***.
- When writing your order, specify the required contacts and coil resistance.
- Relay bases are ordered separately. Indicate the type of relay to be used with that base.
- For detailed specifications and complete parts lists, request US&S Service Manual SM-4551R.

	PH-150BH Relay and Base							
US&S Order No.	Contacts	Coil Res. Series	Coil Res. Multi.	Min. D.A. Amps	Min. D.A. Volts	Energ. Amps (1)	Energ. Volts (1)	Notes
N322511001	1FB, 1F, 1B, Std.	2.0	--	0.1200	0.240	0.1600	0.320	(2)
		--	0.5	0.2400	0.120	0.3200	0.160	(2)
N322511002	1FB, 1F, 1B, Std.	4.0	--	0.0860	0.344	0.1150	0.460	(2)
		--	1	0.1720	0.172	0.2300	0.230	(2)
N322511003	1FB, 1F, 1B, Std.	2000.0	--	0.0045	9.050	0.0060	12.100	(2), (4)
		--	500.0	0.0090	4.520	0.0121	6.050	(2)
N322511005	1FB, 1F, 1B, Std.	2.6	--	0.1370	0.356	0.1900	0.494	(2), (5)
		--	0.65	0.2740	0.178	0.3800	0.247	(2)
N322511006	1FB, 1F, 1B, Std.	400.0	--	0.0094	3.760	0.0126	5.030	(2), (3)
N322511011	1FB, 1F, 1B, Std.	4.0	--	0.0090	0.362	0.1210	0.484	(2)
		--	1.0	0.1810	0.1810	0.2420	0.2420	(2)
N4513760302	Plug-In base for PN-150BH (ref. RSE 4R1)							
	Note (1): Value at which relay will become energized. Response will generally occur at some lower value. Note (2): Contacts - 1 FB; 2B; 3F Note (3): Special relay for use with AFO-II equipment. Note (4): Special relay for use with AFO equipment. Note (5): Relay designed to be immune to AC; for use in electrified territory (with AC propulsion)							

UNION SWITCH & SIGNAL

PN-150BH Biased Track Circuit Relay

RSE-4G2
Rev. 7-03

General Features of US&S PN-Series Electro-Mechanical Vital Relays

US&S vital and non-vital plug-in relays serve a multitude of functions in both railroad and transit control circuit applications. These time-proven relays are space-saving, easily installed or removed and can be handled in the field without disturbing coil or contact wiring.

In addition to production of PN-series electro-mechanical relays at the same high standards, US&S also provides high-quality remanufacturing services for these relays so that they can be returned to service in like-new condition. Refer to the "Remanufacturing Services" of this catalog or call 1-800-652-7276 for additional information.

Advantages

- Wide selection available for every application
- Meets or exceeds applicable AREMA (AAR) requirements
- Plug-in design permits quick installation or removal
- Indexed to assure proper mounting
- Sturdy plug-in base for every relay model
- Operates over wide temperature range

High Quality Design and Assembly

All components of US&S plug-in relays are constructed according to rigid quality control standards and are thoroughly tested before shipment. Coils are encapsulated for protection against mechanical damage and moisture. Magnetic circuits are constructed of non-aging materials. The air gap is not disturbed when the coil is removed or the contact springs adjusted. Those relays with an adjustable magnetic shunt may be adjusted for degree of magnetic hold-down force without changing the contact adjustment or the hold-down pole-piece position.

Contact fingers and springs utilize a simple, reliable design and are heat treated to assure uniformity of material and contact stability. The heavy contact fingers extend through the base to serve as plug connectors. Heel contacts are actuated by operating arms pivoted to the armature. Contact surfaces have sufficient wiping action to be self-cleaning. "Standard" contact materials include fine silver heels and backs, and silver-impregnated carbon (S.I.C.) fronts with a typical capacity of 4A @ 30 Vdc or 175 Vac. "Heavy Duty" (H.D.)" contact materials also include fine silver heels and backs and silver-impregnated carbon (S.I.C.) fronts with a typical capacity of 15A @30 Vdc or 175 Vac.

Other types of contact material for special application are described with the particular relay. Standard contacts are factory-adjusted to standard minimum opening and conform to AREMA (AAR) requirements.

All vital plug-in relays incorporate a transparent molded cover over the relay contacts and armature structure. The cover is sealed to the frame with a gaskethat assures a tight, dust-proof and moisture-proof seal.

Contact Designations

Front and back contacts of plug-in relays are designated "F" and "B", respectively. The dependent contacts are denoted FB, while the independent contacts are denoted "F" or "B" alone.

Testing

Many US&S vital relays are provided a front testing capability. The front testing facility is in series with the coil control circuit to permit deenergization of the relay while it is in its service mounting, without disturbing the relay or wiring. Testing may also be accomplished through the rear of the relay mounting base without opening a contact or coil circuit. Refer to ***RSE-4S1*** for special tools utilized in maintaining US&S plug-in relays.

Latch

A spring-operated latch holds each plug-in relay securely to its mounting base. The latch is released by pressing a button on the front of the relay.

Indexing

All plug-in relays are equipped with indexing pins to prevent insertion of an incorrect relay into the mounting base. Each relay is accompanied by an indexing plate that is applied to the base at the initial installation.

System Voltage

This voltage, which is listed in the relay ordering tabulation specifications, is prescribed for relays in locally energized circuits. Higher voltage may be used, if required, up to 10 watts power dissipation.

UNION SWITCH & SIGNAL

PN-150F Flasher Relay

General Description

The PN-150F flasher relay is an electronically-driven biased dc relay intended for highway crossing flasher signal service. Its electronic flasher package uses a mounting base for installation and quick-disconnect wiring for rapid field replacement of the unit. It is not necessary to remove the relay from service to replace the flasher package. The flash rate is externally adjustable between 45 or 60 flasher per minute (±5). A failure of the electronic package results in steady energy to one signal or intermittent flashing.

Contacts of the relay are silver alloy. The relay is intended for use with the contacts wired in groups of three: 1F, 2F, 3F joined, and 1B, 2B, 3B joined. In this configuration, the relay alternately flashes the left-hand and then the right-hand signal. When wired in shunting service, each bank of three contacts is rated to flash 25 amperes ac lamp load maximum. Thus, each flasher can flash 50 amperes ac lamp load at 10 watts. DC power for the relay may be obtained from a battery or rectifier.

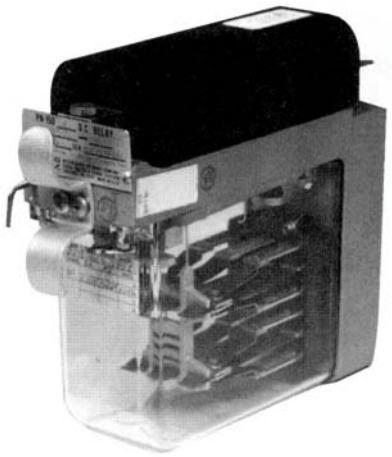

Specifications and Applications

- Refer to the ordering tabulation for operating specifications and additional application notes.

Ordering Information

- Standard relay and plug-in base order numbers listed in tabulation and ***RSE-4R1***.
- When writing your order, specify the required contacts and coil resistance.
- Relay bases are ordered separately. Indicate the type of relay to be used with that base.
- For detailed specifications and complete parts lists, request US&S Service Manual SM-6348.

	PN-150F Relay, Kits, Module and Base
US&S Order No.	
N322530701	Basic PN-150F Flasher Relay
X4510183001	PN-150F Flasher kit: Includes PN-150F Relay, flasher relay module, mtg. bracket, jumpers, varistor, hardware.
X4510183002	PN-150F Flasher Module Only
X4510183003	PN-150F Flasher kit: Includes PN-150F Relay, flasher relay module, mtg. bracket, jumpers, varistor, hardware, relay mounting base.
N4513760302	Plug-In base for PN-150F (ref. RSE4R1)

(See reverse side for general features of US&S electro-mechanical vital relays.)

UNION SWITCH & SIGNAL

PN-150F Flasher Relay

RSE-4H1
Rev. 7-03

General Features of US&S PN-Series Electro-Mechanical Vital Relays

US&S vital and non-vital plug-in relays serve a multitude of functions in both railroad and transit control circuit applications. These time-proven relays are space-saving, easily installed or removed and can be handled in the field without disturbing coil or contact wiring.

In addition to production of PN-series electro-mechanical relays at the same high standards, US&S also provides high-quality remanufacturing services for these relays so that they can be returned to service in like-new condition. Refer to the "Remanufacturing Services" of this catalog or call 1-800-652-7276 for additional information.

Advantages

- Wide selection available for every application
- Meets or exceeds applicable AREMA (AAR) requirements
- Plug-in design permits quick installation or removal
- Indexed to assure proper mounting
- Sturdy plug-in base for every relay model
- Operates over wide temperature range

High Quality Design and Assembly

All components of US&S plug-in relays are constructed according to rigid quality control standards and are thoroughly tested before shipment. Coils are encapsulated for protection against mechanical damage and moisture. Magnetic circuits are constructed of non-aging materials. The air gap is not disturbed when the coil is removed or the contact springs adjusted. Those relays with an adjustable magnetic shunt may be adjusted for degree of magnetic hold-down force without changing the contact adjustment or the hold-down pole-piece position.

Contact fingers and springs utilize a simple, reliable design and are heat treated to assure uniformity of material and contact stability. The heavy contact fingers extend through the base to serve as plug connectors. Heel contacts are actuated by operating arms pivoted to the armature. Contact surfaces have sufficient wiping action to be self-cleaning. "Standard" contact materials include fine silver heels and backs, and silver-impregnated carbon (S.I.C.) fronts with a typical capacity of 4A @ 30 Vdc or 175 Vac. "Heavy Duty" (H.D.)" contact materials also include fine silver heels and backs and silver-impregnated carbon (S.I.C.) fronts with a typical capacity of 15A @30 Vdc or 175 Vac.

Other types of contact material for special application are described with the particular relay. Standard contacts are factory-adjusted to standard minimum opening and conform to AREMA (AAR) requirements.

All vital plug-in relays incorporate a transparent molded cover over the relay contacts and armature structure. The cover is sealed to the frame with a gaskethat assures a tight, dust-proof and moisture-proof seal.

Contact Designations

Front and back contacts of plug-in relays are designated "F" and "B", respectively. The dependent contacts are denoted FB, while the independent contacts are denoted "F" or "B" alone.

Testing

Many US&S vital relays are provided a front testing capability. The front testing facility is in series with the coil control circuit to permit deenergization of the relay while it is in its service mounting, without disturbing the relay or wiring. Testing may also be accomplished through the rear of the relay mounting base without opening a contact or coil circuit. Refer to ***RSE-4S1*** for special tools utilized in maintaining US&S plug-in relays.

Latch

A spring-operated latch holds each plug-in relay securely to its mounting base. The latch is released by pressing a button on the front of the relay.

Indexing

All plug-in relays are equipped with indexing pins to prevent insertion of an incorrect relay into the mounting base. Each relay is accompanied by an indexing plate that is applied to the base at the initial installation.

System Voltage

This voltage, which is listed in the relay ordering tabulation specifications, is prescribed for relays in locally energized circuits. Higher voltage may be used, if required, up to 10 watts power dissipation.

UNION SWITCH & SIGNAL

RSE-4H2
Rev. 7-03

PN-250F Solid-State Flasher Relay
(Replacement for US&S PF-256 Relay)

The new PN-250F Solid-State Flasher relay replaces US&S' PF-256 unit, providing the same high level of reliability in railroad flashing light applications, but with a variety of design and service improvements. Among these are all-electronic control of the flash rate, two flash rate settings in one relay, and greatly improved contact and armature assembly designs.



General Description

The PN-250F is as biased relay that features an internally-mounted electronic flasher module to operate the relay; this is the same highly reliable module as used in the PN-150F. Since the flash rate is electronically controlled, the rate is no longer dependent on mechanical adjustments. Unlike the PF-256F, the PN-250F provides both 45 flashes per minute (FPM) and 60 FPM options in the same relay. The rate is easily changed via a 7" jumper on the rear of the existing relay base (45 FPM with jumper installed, 60 FPM without jumper).

The PN-250F incorporates four normal and four reverse contacts using silver alloy-to-silver alloy. These contacts are far superior than the contacts used in the older PF-256. In addition, the armature assembly is hinged, eliminating the pivot screws and the wear associated with pivots of previous flasher relays. The DC-attractive armature is energized by one 87.5 ohm coil. For highway crossing light operation, contact open and close times are equal and slightly less than 50% of the total cycle; this ensures there are periods where both lights are dark.

The PN-250F relay provides ordinary pick-up and dropaway values as a standard biased relay. Checking of the electrical calibration values is accomplished with a wire terminated to bypass the internal flasher module. DC calibration tests are accomplished by connecting +battery to 1B, and –battery to 1F. This allows calibration to be measured without opening the relay.

Advantages

- Highly dependable flash rate from solid-state module
- Mechanical rate adjustments eliminated
- Greatly improved contacts and armature assembly
- One relay for all standard flash rate applications
- Simple jumper selection of flash rate
- Direct replacement for PF-256; no circuit rewiring

Application

The PN-250F is designed for 8 to 12 volt systems and serves all railway flashing light circuit applications previously served by the PF-256 electro-mechanical relay. Highway crossing flashing light systems typically use the 45 FPM rate, while flashing wayside signals typically use the 60 FPM rate.

The new relay is a direct plug-in replacement for the PF-256F (part number series N322561-XXX). No wiring changes are required to the existing PF-256F circuits when retroftting with the PN-250F. Relay base wiring is exactly the same as the PF-256. Wiring terminations for the old style bakealite base terminal are +A(+) and –A(-), while the new style base terminations are 1A(+) and 1F(-). Indexing is arranged so that the PN-250F can fit into either the PF-256-001(45-55) or the –002 (55-65) base.

UNION SWITCH & SIGNAL

RSE-4H2
Rev. 7-03

PN-250F Solid-State Flasher Relay
(Replacement for US&S PF-256 Relay)

Specifications

Coil Resistance:	87.5 Ohms
Energization:	0.26A
Drop-Away:	0.024A
Full Drop-Away:	0.006A
Pick-Up & Working:	0.065A
System Voltage:	8 to 12 Vdc
Opt. On-Time Rate:	Calibrated at 12 Vdc.
Contacts:	4N, 4R silver alloy to silver alloy
	5A (Vdc) or 175 Vac.
Flash Rates:	45 or 60 FPM
Temp. Range:	-40°C to +70°C

Ordering Information

- Refer to ordering tabulation at right for PN-250F part number.
- Request US&S Service Manual SM-9080 for additional information.

	PN-250F Unit
US&S Order No.	
N40116101	PN-250F Solid-State Flasher Relay

UNION SWITCH & SIGNAL

RSE-4J1
Rev. 7-03

PV-250 2-Element AC Vane Relay

General Description

The PV-250 relay is a 2-element ac vane relay used in track, line, power off and ground detection circuits. As a track relay, it may be used in single or double rail circuits with dc propulsion. Since it is a 2-element relay, it must be used with suitable apparatus to provide adequate displacement between the local and control (track) windings. Contacts of the PV-250 relay are standard (Std.) low voltage silver to silver impregnated carbon fronts and silver-to-silver backs.

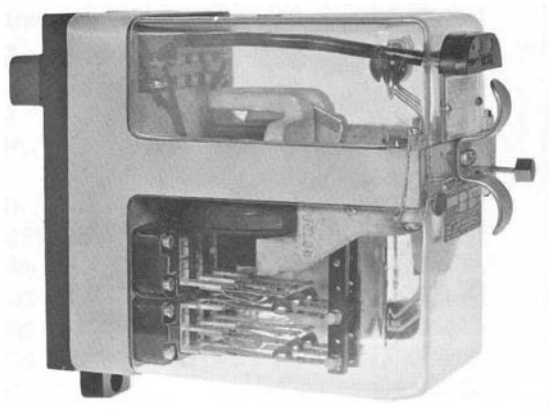

Specifications and Applications:

- Refer to the ordering tabulation for operating specifications and additional application notes.
- Note on tabulation: Where two sets of data are given for a relay, the top set covers control windings in series and the bottom set control windings in parallel. For relays having only one set of data, the data are for control windings in series only.

Ordering Information

- Standard relay and plug-in base order numbers listed in tabulation and ***RSE-4R1***.
- When writing your order, specify the required contacts and coil resistance.
- Relay bases are ordered separately. Indicate the type of relay to be used with that base.
- For detailed specifications and service manual parts lists, refer to the NOTES section of the ordering tabulation.
- Request US&S Service Manual SM-4574 for general adjustment procedures.

(See page 3 for general features of US&S electro-mechanical vital relays.)

UNION SWITCH & SIGNAL

PV-250 2-Element AC Vane Relay

RSE-4J1
Rev. 7-03

Ordering Information (Cont'd)

	PV-250 Relay and Base									
US&S Order No.	Front Test	Contacts	Min. D.A.	P.U. +5% Amp (a)	P.U. +5% Volt (a)	F.S. Amps (b)	F.S. Volts (b)	Local Volts	Local Hz	Notes
N322555001	X	6F, 4B	80% P.U.	0.283	0.418	0.487	0.720	115	60.0	(1)(7)(9)
			80% P.U.	0.566	0.209	0.974	0.360	115	60.0	(2)
			80% P.U.	0.278	0.360	0.478	0.620	110	50.0	(1)
			80% P.U.	0.566	0.180	0.956	0.310	110	50.0	(2)
N322555002	X	6F, 4B	80% P.U.	0.422	0.309	0.750	0.525	115	25.0	(7)(10)
			80% P.U.	0.844	0.155	1.500	0.269	115	25.0	(7)
N322555004	X	6F, 4B	91% P.U.	0.158	97.000	0.181	111.000	115	60.0	(3)(7)
N322555005	X	6F, 4B	90% P.U.	0.115	3.670	0.160	5.100	115	60.0	(1)4)(7)
N322555010	X	6F, 4B	80% P.U.	0.510	0.300	0.770	0.430	115	100.0	(2)(7)(13)
N322555801	--	6F, 4B	80% P.U.	0.283	0.418	0.487	0.720	115	60.0	(1)(7)(9)
			80% P.U.	0.566	0.209	0.974	0.360	115	60.0	(2)
			80% P.U.	0.278	0.360	0.478	0.620	110	50.0	(1)
			80% P.U.	0.566	0.180	0.956	0.310	110	50.0	(2)
N322555805	--	6F, 4B	90% P.U.	0.115	3.670	0.160	5.100	115	60.0	(1)(8)
N342555003	X	2F, 2B	90% P.U.	0.280	0.700	0.327	0.820	115	60.0	(1)(6)(11)
N342555803	--	2F, 2B	90% P.U.	0.280	0.700	0.327	0.820	115	60.0	(6)(11)
N342555809	--	2F, 2B	90% P.U.	0.044	2.740	0.0495	3.050	115	60.0	(1)(8)(12)
N342555811	--	2F, 2B	90% P.U.	0.055	2.200	0.062	2.400	115	60.0	(1)(8)(14)
N342555814	--	2F, 2B	90% P.U.	0.295	0.704	0.322	0.767	115	60/100	(6)(15)
N438689003	Plug-In base for PV-250 (ref. RSE 4R1)									

Note (a): Operating values at ideal phase relationships - pick-up ±5%
Note (b): Operating values at ideal phase relationships - full stroke.
Note (1): Contacts: Control coil in series.
Note (2): Contacts: Control series in multiples.
Note (3): (Not used)
Note (4): Ground detector relay. Ref. US&S Service Manual SM-4574E
Note (5): (Not used)
Note (6): Contacts: 2,3: F 7,8: B
Note (7): Contacts - 1,2,3,6,7,8: F; 4,5,9,10: B
Note (8): Contacts - 7, 8: F; 9,10: B
Note (9): Track circuit relay. Ref. US&S Service Manual SM-4574A
Note (10): Track relay. Ref. US&S Service Manual SM-4574B
Note (11): Slow drop-away relay. Ref. US&S Service Manual SM-4574C
Note (12): Track relay. Ref. US&S Service Manual SM-4574F
Note (13): Track relay. Ref. US&S Service Manual SM-4574G
Note (14): Power-off relay. Ref. US&S Service Manual SM4574J
Note (15): Track circuit relay. Ref. US&S Service Manual SM-4574N

PV-250 2-Element AC Vane Relay

UNION SWITCH & SIGNAL

RSE-4J1
Rev. 7-03

General Features of US&S PN-Series Electro-Mechanical Vital Relays

US&S vital and non-vital plug-in relays serve a multitude of functions in both railroad and transit control circuit applications. These time-proven relays are space-saving, easily installed or removed and can be handled in the field without disturbing coil or contact wiring.

In addition to production of PN-series electro-mechanical relays at the same high standards, US&S also provides high-quality remanufacturing services for these relays so that they can be returned to service in like-new condition. Refer to the "Remanufacturing Services" of this catalog or call 1-800-652-7276 for additional information.

Advantages

- Wide selection available for every application
- Meets or exceeds applicable AREMA (AAR) requirements
- Plug-in design permits quick installation or removal
- Indexed to assure proper mounting
- Sturdy plug-in base for every relay model
- Operates over wide temperature range

High Quality Design and Assembly

All components of US&S plug-in relays are constructed according to rigid quality control standards and are thoroughly tested before shipment. Coils are encapsulated for protection against mechanical damage and moisture. Magnetic circuits are constructed of non-aging materials. The air gap is not disturbed when the coil is removed or the contact springs adjusted. Those relays with an adjustable magnetic shunt may be adjusted for degree of magnetic hold-down force without changing the contact adjustment or the hold-down pole-piece position.

Contact fingers and springs utilize a simple, reliable design and are heat treated to assure uniformity of material and contact stability. The heavy contact fingers extend through the base to serve as plug connectors. Heel contacts are actuated by operating arms pivoted to the armature. Contact surfaces have sufficient wiping action to be self-cleaning. "Standard" contact materials include fine silver heels and backs, and silver-impregnated carbon (S.I.C.) fronts with a typical capacity of 4A @ 30 Vdc or 175 Vac. "Heavy Duty" (H.D.)" contact materials also include fine silver heels and backs and silver-impregnated carbon (S.I.C.) fronts with a typical capacity of 15A @30 Vdc or 175 Vac.

Other types of contact material for special application are described with the particular relay. Standard contacts are factory-adjusted to standard minimum opening and conform to AREMA (AAR) requirements.

All vital plug-in relays incorporate a transparent molded cover over the relay contacts and armature structure. The cover is sealed to the frame with a gaskethat assures a tight, dust-proof and moisture-proof seal.

Contact Designations

Front and back contacts of plug-in relays are designated "F" and "B", respectively. The dependent contacts are denoted FB, while the independent contacts are denoted "F" or "B" alone.

Testing

Many US&S vital relays are provided a front testing capability. The front testing facility is in series with the coil control circuit to permit deenergization of the relay while it is in its service mounting, without disturbing the relay or wiring. Testing may also be accomplished through the rear of the relay mounting base without opening a contact or coil circuit. Refer to ***RSE-4S1*** for special tools utilized in maintaining US&S plug-in relays.

Latch

A spring-operated latch holds each plug-in relay securely to its mounting base. The latch is released by pressing a button on the front of the relay.

Indexing

All plug-in relays are equipped with indexing pins to prevent insertion of an incorrect relay into the mounting base. Each relay is accompanied by an indexing plate that is applied to the base at the initial installation.

System Voltage

This voltage, which is listed in the relay ordering tabulation specifications, is prescribed for relays in locally energized circuits. Higher voltage may be used, if required, up to 10 watts power dissipation.

UNION SWITCH & SIGNAL

UNION SWITCH & SIGNAL

PP-151 Magnetic Stick Relay

General Description

The PP-151 relay is a dc magnetic stick relay that stays in the last operated position after control energy is removed. Full contact pressure is maintained during deenergization to ensure circuit continuity. There are two types of PP-151 relays, wayside and car-carried. Refer to ***RSE-8D2*** for the car-carried version. The PP-151 is intended for polar circuits where the last position must be retained on loss of power. The wayside type is designed for polar control, indication circuits and switch control. In the switch control application, it is used in conjunction with or to control type PN-150BM relays (see ***RSE-4K2***).

Contacts of the PP-151 relay are as follows: SIC-silver to silver-impregnated carbon, normal and reverse. Silver to silver, normal and reverse.

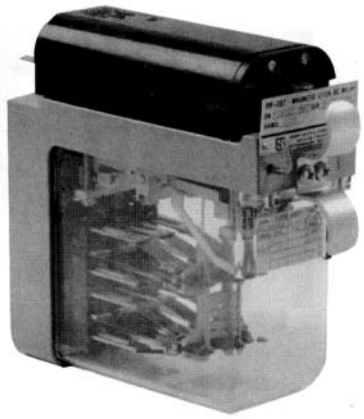

Specifications and Applications

- Refer to the ordering tabulation for operating specifications.

Ordering Information

- Standard relay and plug-in base order numbers listed in tabulation and ***RSE-4R1***.
- When writing your order, specify the required contacts and coil resistance.
- Relay bases are ordered separately. Indicate the type of relay to be used with that base.
- For detailed specifications and complete parts lists, request US&S Service Manual SM-4596G.

	PP-151 Relay and Base					
US&S Order No.	Front Test	Contacts	Coil Res.	Max. P.U. (1)	Min. P.U. (2)	Notes
N322507701	X	6NR SIC	240	5.52	5.42	--
N322507703	X	6NR SIC	25	1.54	1.2	(2)
N322516701	X	4 NR SIC 2NR Sil.	240	5.52	4.52	(3)
N438007802	X	6NR SIC	400	6.85	5.3	--
N438007804	--	6NR SIC	400	6.85	5.3	--
N4513760302	Plug-In base for PN-151 (ref. RSE 4R1)					
	General note: Energization value - point where relay will become energized. Reponse will generall occur at some lower value. Note (1): Maximum polar pick-up and working volts. Note (2): Minimum polar pick-up and working volts.					

(See reverse side for general features of US&S electro-mechanical vital relays.)

UNION SWITCH & SIGNAL

PP-151 Magnetic Stick Relay

RSE-4K1
Rev. 7-03

General Features of US&S PN-Series Electro-Mechanical Vital Relays

US&S vital and non-vital plug-in relays serve a multitude of functions in both railroad and transit control circuit applications. These time-proven relays are space-saving, easily installed or removed and can be handled in the field without disturbing coil or contact wiring.

In addition to production of PN-series electro-mechanical relays at the same high standards, US&S also provides high-quality remanufacturing services for these relays so that they can be returned to service in like-new condition. Refer to the "Remanufacturing Services" of this catalog or call 1-800-652-7276 for additional information.

Advantages

- Wide selection available for every application
- Meets or exceeds applicable AREMA (AAR) requirements
- Plug-in design permits quick installation or removal
- Indexed to assure proper mounting
- Sturdy plug-in base for every relay model
- Operates over wide temperature range

High Quality Design and Assembly

All components of US&S plug-in relays are constructed according to rigid quality control standards and are thoroughly tested before shipment. Coils are encapsulated for protection against mechanical damage and moisture. Magnetic circuits are constructed of non-aging materials. The air gap is not disturbed when the coil is removed or the contact springs adjusted. Those relays with an adjustable magnetic shunt may be adjusted for degree of magnetic hold-down force without changing the contact adjustment or the hold-down pole-piece position.

Contact fingers and springs utilize a simple, reliable design and are heat treated to assure uniformity of material and contact stability. The heavy contact fingers extend through the base to serve as plug connectors. Heel contacts are actuated by operating arms pivoted to the armature. Contact surfaces have sufficient wiping action to be self-cleaning. "Standard" contact materials include fine silver heels and backs, and silver-impregnated carbon (S.I.C.) fronts with a typical capacity of 4A @ 30 Vdc or 175 Vac. "Heavy Duty" (H.D.)" contact materials also include fine silver heels and backs and silver-impregnated carbon (S.I.C.) fronts with a typical capacity of 15A @30 Vdc or 175 Vac.

Other types of contact material for special application are described with the particular relay. Standard contacts are factory-adjusted to standard minimum opening and conform to AREMA (AAR) requirements.

All vital plug-in relays incorporate a transparent molded cover over the relay contacts and armature structure. The cover is sealed to the frame with a gaskethat assures a tight, dust-proof and moisture-proof seal.

Contact Designations

Front and back contacts of plug-in relays are designated "F" and "B", respectively. The dependent contacts are denoted FB, while the independent contacts are denoted "F" or "B" alone.

Testing

Many US&S vital relays are provided a front testing capability. The front testing facility is in series with the coil control circuit to permit deenergization of the relay while it is in its service mounting, without disturbing the relay or wiring. Testing may also be accomplished through the rear of the relay mounting base without opening a contact or coil circuit. Refer to ***RSE-4S1*** for special tools utilized in maintaining US&S plug-in relays.

Latch

A spring-operated latch holds each plug-in relay securely to its mounting base. The latch is released by pressing a button on the front of the relay.

Indexing

All plug-in relays are equipped with indexing pins to prevent insertion of an incorrect relay into the mounting base. Each relay is accompanied by an indexing plate that is applied to the base at the initial installation.

System Voltage

This voltage, which is listed in the relay ordering tabulation specifications, is prescribed for relays in locally energized circuits. Higher voltage may be used, if required, up to 10 watts power dissipation.

UNION SWITCH & SIGNAL

RSE-4K2
Rev. 7-03

PN-150BM Magnetic Blow Out Relay

General Description

The PN-150BM is a biased relay that has contacts equipped with magnetic blowouts. These consist of silver to silver-impregnated carbon front and silver-to-silver back. The contacts can carry 15 amperes up to 120 Vdc or 300 Vac. The PN-150BM is typically used in conjunction with the PP-151 (see ***RSE-4K1***) and the PN-150S0 (see ***RSE-4L1***) relays to control electric switch machines. All PN-150BM relays provide front testing.

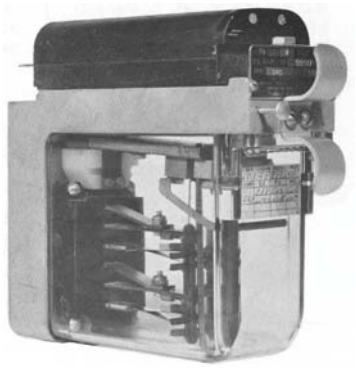

Specifications and Applications

- Refer to the ordering tabulation for operating specifications.

Ordering Information

- Standard relay and plug-in base order numbers listed in tabulation and ***RSE-4R1***.
- When writing your order, specify the required contacts and coil resistance.
- Relay bases are ordered separately. Indicate the type of relay to be used with that base.
- For detailed specifications and complete parts lists, request US&S Service Manual SM-4551M

	PN-150BM Relay and Base					
US&S Order No.	Contacts	Coil Res.	Energ. Amps (1)	Energ. Volts (1)	System Volt.	Notes
N322517001	2F, Mag. H.D.	240	0.0209	5.02	10 to 16	(2)
N322524001	2F, 2B, Mag. H.D.	240	0.025	6.0	10 to 16	(2)
N322524002	2F, 2B, Mag. H.D.	400	0.0174	7.0	10 to 16	(2)
N322524003	2F, 2B, Mag. H.D.	2730	0.0066	18.0	24	(2)
N322525001	3F, Mag. H.D.	240	0.025	6.0	10 to 16	(2)
N322525004	3F, Mag. H.D.	1300	0.010	13.0	10 to 16	(2)
N322525006	3F, Mag. H.D.	220/220	0.037	8.2	10 to 16	(2)
N4513760302	Plug-In base for PN-150BM (ref. RSE-4R1)					
	Note (1): Value at which relay will become energized. Response will generally occur at some lower value. Note (2): Contacts: 2F: 1,2 F circuit fronts toward +batt. 3F: 1,2,3 F circuit fronts toward +batt. 2F, 2B: 1,2 F circuit heels toward +batt. 3,4 B circuit heels torward +batt.					

(See reverse side for general features of US&S electro-mechanical vital relays.)

UNION SWITCH & SIGNAL

PP-150BM Magnetic Blow Out Relay

RSE-4K2
Rev. 7-03

General Features of US&S PN-Series Electro-Mechanical Vital Relays

US&S vital and non-vital plug-in relays serve a multitude of functions in both railroad and transit control circuit applications. These time-proven relays are space-saving, easily installed or removed and can be handled in the field without disturbing coil or contact wiring.

In addition to production of PN-series electro-mechanical relays at the same high standards, US&S also provides high-quality remanufacturing services for these relays so that they can be returned to service in like-new condition. Refer to the "Remanufacturing Services" of this catalog or call 1-800-652-7276 for additional information.

Advantages

- Wide selection available for every application
- Meets or exceeds applicable AREMA (AAR) requirements
- Plug-in design permits quick installation or removal
- Indexed to assure proper mounting
- Sturdy plug-in base for every relay model
- Operates over wide temperature range

High Quality Design and Assembly

All components of US&S plug-in relays are constructed according to rigid quality control standards and are thoroughly tested before shipment. Coils are encapsulated for protection against mechanical damage and moisture. Magnetic circuits are constructed of non-aging materials. The air gap is not disturbed when the coil is removed or the contact springs adjusted. Those relays with an adjustable magnetic shunt may be adjusted for degree of magnetic hold-down force without changing the contact adjustment or the hold-down pole-piece position.

Contact fingers and springs utilize a simple, reliable design and are heat treated to assure uniformity of material and contact stability. The heavy contact fingers extend through the base to serve as plug connectors. Heel contacts are actuated by operating arms pivoted to the armature. Contact surfaces have sufficient wiping action to be self-cleaning. "Standard" contact materials include fine silver heels and backs, and silver-impregnated carbon (S.I.C.) fronts with a typical capacity of 4A @ 30 Vdc or 175 Vac. "Heavy Duty" (H.D.)" contact materials also include fine silver heels and backs and silver-impregnated carbon (S.I.C.) fronts with a typical capacity of 15A @30 Vdc or 175 Vac.

Other types of contact material for special application are described with the particular relay. Standard contacts are factory-adjusted to standard minimum opening and conform to AREMA (AAR) requirements.

All vital plug-in relays incorporate a transparent molded cover over the relay contacts and armature structure. The cover is sealed to the frame with a gaskethat assures a tight, dust-proof and moisture-proof seal.

Contact Designations

Front and back contacts of plug-in relays are designated "F" and "B", respectively. The dependent contacts are denoted FB, while the independent contacts are denoted "F" or "B" alone.

Testing

Many US&S vital relays are provided a front testing capability. The front testing facility is in series with the coil control circuit to permit deenergization of the relay while it is in its service mounting, without disturbing the relay or wiring. Testing may also be accomplished through the rear of the relay mounting base without opening a contact or coil circuit. Refer to ***RSE-4S1*** for special tools utilized in maintaining US&S plug-in relays.

Latch

A spring-operated latch holds each plug-in relay securely to its mounting base. The latch is released by pressing a button on the front of the relay.

Indexing

All plug-in relays are equipped with indexing pins to prevent insertion of an incorrect relay into the mounting base. Each relay is accompanied by an indexing plate that is applied to the base at the initial installation.

System Voltage

This voltage, which is listed in the relay ordering tabulation specifications, is prescribed for relays in locally energized circuits. Higher voltage may be used, if required, up to 10 watts power dissipation.

UNION SWITCH & SIGNAL

RSE-4L1
Rev. 7-03

PN-150SO DC Switch Control Relay

General Description

The PN-150S0 relay is used in conjunction with the PN-150BM relay (see ***RSE-4K2***) to cut off power to a dc switch machine that has stalled. The motor current flows through the coil; when the operating time (as given in the ordering tabulation) is exceeded, the relay becomes energized. This opens the control circuit of the PN-150BM relay which, in turn, cuts off power to the switch machine. The circuit is arranged so that, once the PN-150S0 relay is energized, it will remain energized until the switch control is reversed. Models of this relay are designed for switch machines with clutches adjusted to slip at 12 or 20 amperes. The PN-150S0 relay has both sets of coil leads available for external circuit arrangements, and is not equipped for front testing. Contacts are internally wired to accommodate circuitry; contact US&S for details.

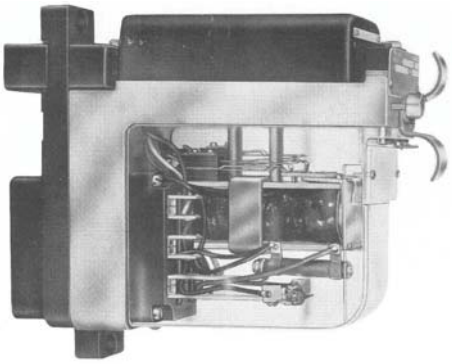

Specifications and Applications

- Refer to the ordering tabulation for operating specifications.

Ordering Information

- Standard relay and plug-in base order numbers listed in tabulation and ***RSE-4R1***.
- When writing your order, specify the required contacts and coil resistance.
- Relay bases are ordered separately. Indicate the type of relay to be used with that base.
- For detailed specifications and complete parts lists, request US&S Service Manual SM-4571.

	PN-150SO Relays and Base		
US&S Order No.	Res. Oper. (1)	Res. Stick (1)	Notes
N322512001	0.039	135	(2)
N322512002	0.0135	135	(3)
N4513760302	Plug-In base for PN-150SO (ref. RSE 4R1)		
	Note (1): Value at which relay will become energized. Response will generally occur at some lower value. Note (2): For switch machine having clutch adjusted to 12 Amps. Note (3): For switch machine having clutch adjusted to 20 Amps.		

(See reverse side for general features of US&S electro-mechanical vital relays.)

UNION SWITCH & SIGNAL

PN-150SO DC Switch Control Relay

RSE-4L1
Rev. 7-03

General Features of US&S PN-Series Electro-Mechanical Vital Relays

US&S vital and non-vital plug-in relays serve a multitude of functions in both railroad and transit control circuit applications. These time-proven relays are space-saving, easily installed or removed and can be handled in the field without disturbing coil or contact wiring.

In addition to production of PN-series electro-mechanical relays at the same high standards, US&S also provides high-quality remanufacturing services for these relays so that they can be returned to service in like-new condition. Refer to the "Remanufacturing Services" of this catalog or call 1-800-652-7276 for additional information.

Advantages

- Wide selection available for every application
- Meets or exceeds applicable AREMA (AAR) requirements
- Plug-in design permits quick installation or removal
- Indexed to assure proper mounting
- Sturdy plug-in base for every relay model
- Operates over wide temperature range

High Quality Design and Assembly

All components of US&S plug-in relays are constructed according to rigid quality control standards and are thoroughly tested before shipment. Coils are encapsulated for protection against mechanical damage and moisture. Magnetic circuits are constructed of non-aging materials. The air gap is not disturbed when the coil is removed or the contact springs adjusted. Those relays with an adjustable magnetic shunt may be adjusted for degree of magnetic hold-down force without changing the contact adjustment or the hold-down pole-piece position.

Contact fingers and springs utilize a simple, reliable design and are heat treated to assure uniformity of material and contact stability. The heavy contact fingers extend through the base to serve as plug connectors. Heel contacts are actuated by operating arms pivoted to the armature. Contact surfaces have sufficient wiping action to be self-cleaning. "Standard" contact materials include fine silver heels and backs, and silver-impregnated carbon (S.I.C.) fronts with a typical capacity of 4A @ 30 Vdc or 175 Vac. "Heavy Duty" (H.D.)" contact materials also include fine silver heels and backs and silver-impregnated carbon (S.I.C.) fronts with a typical capacity of 15A @30 Vdc or 175 Vac.

Other types of contact material for special application are described with the particular relay. Standard contacts are factory-adjusted to standard minimum opening and conform to AREMA (AAR) requirements.

All vital plug-in relays incorporate a transparent molded cover over the relay contacts and armature structure. The cover is sealed to the frame with a gaskethat assures a tight, dust-proof and moisture-proof seal.

Contact Designations

Front and back contacts of plug-in relays are designated "F" and "B", respectively. The dependent contacts are denoted FB, while the independent contacts are denoted "F" or "B" alone.

Testing

Many US&S vital relays are provided a front testing capability. The front testing facility is in series with the coil control circuit to permit deenergization of the relay while it is in its service mounting, without disturbing the relay or wiring. Testing may also be accomplished through the rear of the relay mounting base without opening a contact or coil circuit. Refer to ***RSE-4S1*** for special tools utilized in maintaining US&S plug-in relays.

Latch

A spring-operated latch holds each plug-in relay securely to its mounting base. The latch is released by pressing a button on the front of the relay.

Indexing

All plug-in relays are equipped with indexing pins to prevent insertion of an incorrect relay into the mounting base. Each relay is accompanied by an indexing plate that is applied to the base at the initial installation.

System Voltage

This voltage, which is listed in the relay ordering tabulation specifications, is prescribed for relays in locally energized circuits. Higher voltage may be used, if required, up to 10 watts power dissipation.

UNION SWITCH & SIGNAL

RSE-4L2
Rev. 7-03

PN-152SO DC Switch Control Relay

General Description

The PN-152S0 relay is used in conjunction with the PN-150BM relay (see ***RSE-4K2***) to cut off power to a dc switch machine that has stalled. The motor current flows through the coil; when the operating time (as given in the ordering tabulation) is exceeded, the relay becomes energized. This opens the control circuit of the PN-150BM relay which, in turn, cuts off power to the switch machine. The circuit is arranged so that, once the PN-152S0 relay is energized, it will remain energized until the switch control is reversed. Models of this relay are designed for switch machines with clutches adjusted to slip at 13 amperes. The PN-152S0 relay has both sets of coil leads available for external circuit arrangements, and is not equipped for front testing. Contacts are internally wired to accommodate circuitry; contact US&S for details.

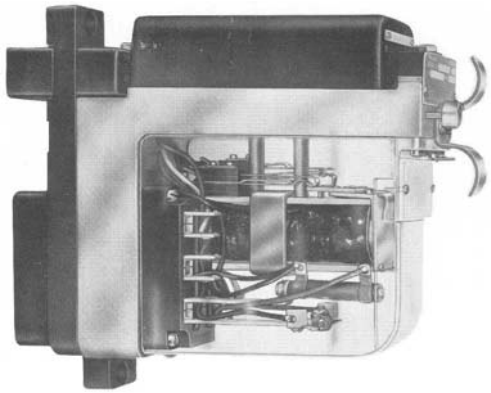

Specifications and Applications

- Refer to the ordering tabulation for operating specifications.

Ordering Information

- Standard relay and plug-in base order numbers listed in tabulation and ***RSE-4R1***.
- When writing your order, specify the required contacts and coil resistance.
- Relay bases are ordered separately. Indicate the type of relay to be used with that base.
- For detailed specifications and complete parts lists, request US&S Service Manual SM-5929.

	PN-152SO Relay and Base		
US&S Order No.	Res. Oper. (1)	Res. Stick (1)	Notes
N322522001	5.0	750	(2)
N322522802	5.0	750	(2)
N4513760302	Plug-In base for PN-152SO (ref. RSE 4R1)		
	Note (1): Value at which relay will become energized. Response will generally occur at some lower value. Note (2): For switch machine having clutch adjusted to 13 Amps.		

(See reverse side for general features of US&S electro-mechanical vital relays.)

UNION SWITCH & SIGNAL

PN-152SO DC Switch Control Relay

RSE-4L2
Rev. 7-03

General Features of US&S PN-Series Electro-Mechanical Vital Relays

US&S vital and non-vital plug-in relays serve a multitude of functions in both railroad and transit control circuit applications. These time-proven relays are space-saving, easily installed or removed and can be handled in the field without disturbing coil or contact wiring.

In addition to production of PN-series electro-mechanical relays at the same high standards, US&S also provides high-quality remanufacturing services for these relays so that they can be returned to service in like-new condition. Refer to the "Remanufacturing Services" of this catalog or call 1-800-652-7276 for additional information.

Advantages

- Wide selection available for every application
- Meets or exceeds applicable AREMA (AAR) requirements
- Plug-in design permits quick installation or removal
- Indexed to assure proper mounting
- Sturdy plug-in base for every relay model
- Operates over wide temperature range

High Quality Design and Assembly

All components of US&S plug-in relays are constructed according to rigid quality control standards and are thoroughly tested before shipment. Coils are encapsulated for protection against mechanical damage and moisture. Magnetic circuits are constructed of non-aging materials. The air gap is not disturbed when the coil is removed or the contact springs adjusted. Those relays with an adjustable magnetic shunt may be adjusted for degree of magnetic hold-down force without changing the contact adjustment or the hold-down pole-piece position.

Contact fingers and springs utilize a simple, reliable design and are heat treated to assure uniformity of material and contact stability. The heavy contact fingers extend through the base to serve as plug connectors. Heel contacts are actuated by operating arms pivoted to the armature. Contact surfaces have sufficient wiping action to be self-cleaning. "Standard" contact materials include fine silver heels and backs, and silver-impregnated carbon (S.I.C.) fronts with a typical capacity of 4A @ 30 Vdc or 175 Vac. "Heavy Duty" (H.D.)" contact materials also include fine silver heels and backs and silver-impregnated carbon (S.I.C.) fronts with a typical capacity of 15A @30 Vdc or 175 Vac.

Other types of contact material for special application are described with the particular relay. Standard contacts are factory-adjusted to standard minimum opening and conform to AREMA (AAR) requirements.

All vital plug-in relays incorporate a transparent molded cover over the relay contacts and armature structure. The cover is sealed to the frame with a gaskethat assures a tight, dust-proof and moisture-proof seal.

Contact Designations

Front and back contacts of plug-in relays are designated "F" and "B", respectively. The dependent contacts are denoted FB, while the independent contacts are denoted "F" or "B" alone.

Testing

Many US&S vital relays are provided a front testing capability. The front testing facility is in series with the coil control circuit to permit deenergization of the relay while it is in its service mounting, without disturbing the relay or wiring. Testing may also be accomplished through the rear of the relay mounting base without opening a contact or coil circuit. Refer to ***RSE-4S1*** for special tools utilized in maintaining US&S plug-in relays.

Latch

A spring-operated latch holds each plug-in relay securely to its mounting base. The latch is released by pressing a button on the front of the relay.

Indexing

All plug-in relays are equipped with indexing pins to prevent insertion of an incorrect relay into the mounting base. Each relay is accompanied by an indexing plate that is applied to the base at the initial installation.

System Voltage

This voltage, which is listed in the relay ordering tabulation specifications, is prescribed for relays in locally energized circuits. Higher voltage may be used, if required, up to 10 watts power dissipation.

UNION SWITCH & SIGNAL

PN-258BC Switch Control/Decoding Relay

General Description

The PN-258BC relay is a biased decoding relay that normally operates from a decoding transformer. It has both slow pick-up and slow drop-away characteristics. Contacts are standard low voltage silver to silver-impregnated carbon front and silver-to-silver back.

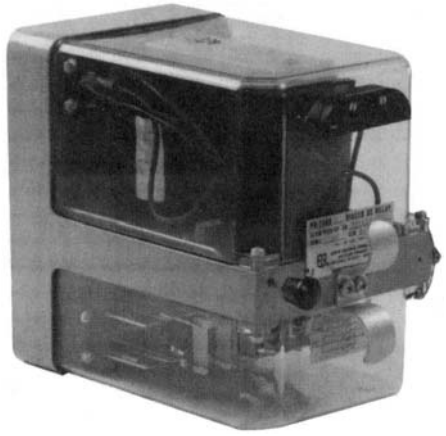

Specifications and Applications

- Refer to the ordering tabulation for operating specifications.

Ordering Information

- Standard relay and plug-in base order numbers listed in tabulation and ***RSE-4R1***.
- When writing your order, specify the required contacts and coil resistance.
- Relay bases are ordered separately. Indicate the type of relay to be used with that base.
- For detailed specifications and complete parts lists, request US&S Service Manual SM-4597.

	PN-258BC Relay and Base					
US&S Order No.	Contacts	Coil Res.	Snub Res.	Min. D.A. Volts	Max. D.A. Volts	Energ. Volts
N322558701	6FB Std.	66	240	0.77	0.88	1.71
N438689001	Plug-In base for PN-258BC (ref. RSE 4R1)					

(See reverse side for general features of US&S electro-mechanical vital relays.)

UNION SWITCH & SIGNAL

PN-258BC Switch Control/Decoding Relay

RSE-4L3
Rev. 7-03

General Features of US&S PN-Series Electro-Mechanical Vital Relays

US&S vital and non-vital plug-in relays serve a multitude of functions in both railroad and transit control circuit applications. These time-proven relays are space-saving, easily installed or removed and can be handled in the field without disturbing coil or contact wiring.

In addition to production of PN-series electro-mechanical relays at the same high standards, US&S also provides high-quality remanufacturing services for these relays so that they can be returned to service in like-new condition. Refer to the "Remanufacturing Services" of this catalog or call 1-800-652-7276 for additional information.

Advantages

- Wide selection available for every application
- Meets or exceeds applicable AREMA (AAR) requirements
- Plug-in design permits quick installation or removal
- Indexed to assure proper mounting
- Sturdy plug-in base for every relay model
- Operates over wide temperature range

High Quality Design and Assembly

All components of US&S plug-in relays are constructed according to rigid quality control standards and are thoroughly tested before shipment. Coils are encapsulated for protection against mechanical damage and moisture. Magnetic circuits are constructed of non-aging materials. The air gap is not disturbed when the coil is removed or the contact springs adjusted. Those relays with an adjustable magnetic shunt may be adjusted for degree of magnetic hold-down force without changing the contact adjustment or the hold-down pole-piece position.

Contact fingers and springs utilize a simple, reliable design and are heat treated to assure uniformity of material and contact stability. The heavy contact fingers extend through the base to serve as plug connectors. Heel contacts are actuated by operating arms pivoted to the armature. Contact surfaces have sufficient wiping action to be self-cleaning. "Standard" contact materials include fine silver heels and backs, and silver-impregnated carbon (S.I.C.) fronts with a typical capacity of 4A @ 30 Vdc or 175 Vac. "Heavy Duty" (H.D.)" contact materials also include fine silver heels and backs and silver-impregnated carbon (S.I.C.) fronts with a typical capacity of 15A @30 Vdc or 175 Vac.

Other types of contact material for special application are described with the particular relay. Standard contacts are factory-adjusted to standard minimum opening and conform to AREMA (AAR) requirements.

All vital plug-in relays incorporate a transparent molded cover over the relay contacts and armature structure. The cover is sealed to the frame with a gaskethat assures a tight, dust-proof and moisture-proof seal.

Contact Designations

Front and back contacts of plug-in relays are designated "F" and "B", respectively. The dependent contacts are denoted FB, while the independent contacts are denoted "F" or "B" alone.

Testing

Many US&S vital relays are provided a front testing capability. The front testing facility is in series with the coil control circuit to permit deenergization of the relay while it is in its service mounting, without disturbing the relay or wiring. Testing may also be accomplished through the rear of the relay mounting base without opening a contact or coil circuit. Refer to ***RSE-4S1*** for special tools utilized in maintaining US&S plug-in relays.

Latch

A spring-operated latch holds each plug-in relay securely to its mounting base. The latch is released by pressing a button on the front of the relay.

Indexing

All plug-in relays are equipped with indexing pins to prevent insertion of an incorrect relay into the mounting base. Each relay is accompanied by an indexing plate that is applied to the base at the initial installation.

System Voltage

This voltage, which is listed in the relay ordering tabulation specifications, is prescribed for relays in locally energized circuits. Higher voltage may be used, if required, up to 10 watts power dissipation.

UNION SWITCH & SIGNAL

RSE-4M1
Rev. 7-03

PC-250TR Code Generating Relay

General Description

The PC-250TR is a high quality code generating relay. It is used to generate code frequencies for coded track circuits and cab signaling equipment. This relay is tuned to a specific frequency. Its contacts are then used to open or close a circuit at the set rate providing equal off and on times. Two types of contacts are available in the PC-250TR: L.V. (low voltage) and H.V. (high voltage). The L.V. is silver platinum-to-silver platinum for use in circuits below 50 volts, while the H. V. is tungsten-to-tungsten for use in circuits above 50 volts, to afford longer contact life. The tungsten contacts cannot be employed in low voltage circuits due to the high contact resistance they develop. The PC-250TR relay must be horizontally separated by at least five inches from the code following relays. However, PC-250TR relays may be mounted adjacent to each other. These relays are not equipped for front testing.

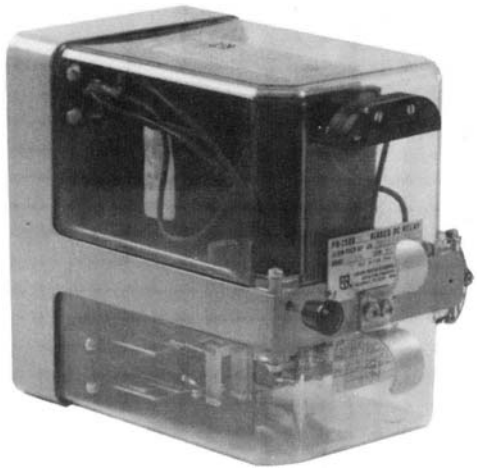

Solid-State Replacement

- Refer to ***RSE-4C1*** for US&S' new PN-250CG solid-state code generator relay, which is a direct replacement for the PC-250TR.

Specifications:

- Refer to the ordering tabulation for operating specifications.

Ordering Information

- Standard relay and plug-in base order numbers listed in tabulation and ***RSE-4R1***.
- When writing your order, specify the required contacts and coil resistance.
- Relay bases are ordered separately. Indicate the type of relay to be used with that base.
- For detailed specifications and complete parts lists, request US&S Service Manual SM-4569.

(See page 3 for general features of US&S electro-mechanical vital relays.)

UNION SWITCH & SIGNAL

PC-250TR Code Generating Relay

RSE-4M1
Rev. 7-03

Ordering Information (Cont'd)

	PC-250TR Relays and Base							
US&S Order No.	Cyles/ Minute	Contacts 1(F)	Contacts 2(B)	Contacts 3(F)	Contacts 4(B)	System Volt.	Coil Res.	Arc Supr. Res. (1)
N322556001	180	L.V.	L.V.	L.V.	L.V.	10 to 12	60	510
N322556002	75	L.V.	L.V.	L.V.	L.V.	10 to 12	60	510
N322556003	120	L.V.	L.V.	L.V.	L.V.	10 to 12	40	300
N322556004	180	H.V.	H.V.	L.V.	L.V.	10 to 12	60	510
N322556005	75	H.V.	H.V.	L.V.	L.V.	10 to 12	60	510
N322556007	180	H.V.	H.V.	H.V.	H.V.	10 to 12	60	510
N322556008	75	H.V.	H.V.	H.V.	H.V.	10 to 12	60	510
N322556009	270	L.V.	L.V.	L.V.	L.V.	10 to 12	40	300
N322556010	270	H.V.	H.V.	H.V.	H.V.	10 to 12	40	300
N322556011	120	H.V.	H.V.	H.V.	H.V.	10 to 12	40	300
N322556012	75	H.V.	H.V.	H.V.	H.V.	16	90	680
N322556016	420	H.V.	H.V.	H.V.	H.V.	16	60	510
N322556018	75	L.V.	L.V.	L.V.	L.V.	16	90	680
N322556019	270	H.V.	H.V.	L.V.	L.V.	10 to 12	40	300
N322556021	50	L.V.	L.V.	L.V.	L.V.	10 to 12	60	510
N322556022	420	L.V.	L.V.	L.V.	L.V.	10 to 12	40	300
N322556818	75	L.V.	L.V.	L.V.	L.V.	16	90	300
N438689003	Plug-In base for PN-250TR (ref. RSE4R1)							
	General note: Energization value - point where relay will become energized. Reponse will generall occur at some lower value. Note (1): Internal arc suppression resistor in multiple with coil.							

PC-250TR Code Generating Relay

UNION SWITCH & SIGNAL

RSE-4M1
Rev. 7-03

General Features of US&S PN-Series Electro-Mechanical Vital Relays

US&S vital and non-vital plug-in relays serve a multitude of functions in both railroad and transit control circuit applications. These time-proven relays are space-saving, easily installed or removed and can be handled in the field without disturbing coil or contact wiring.

In addition to production of PN-series electro-mechanical relays at the same high standards, US&S also provides high-quality remanufacturing services for these relays so that they can be returned to service in like-new condition. Refer to the "Remanufacturing Services" of this catalog or call 1-800-652-7276 for additional information.

Advantages

- Wide selection available for every application
- Meets or exceeds applicable AREMA (AAR) requirements
- Plug-in design permits quick installation or removal
- Indexed to assure proper mounting
- Sturdy plug-in base for every relay model
- Operates over wide temperature range

High Quality Design and Assembly

All components of US&S plug-in relays are constructed according to rigid quality control standards and are thoroughly tested before shipment. Coils are encapsulated for protection against mechanical damage and moisture. Magnetic circuits are constructed of non-aging materials. The air gap is not disturbed when the coil is removed or the contact springs adjusted. Those relays with an adjustable magnetic shunt may be adjusted for degree of magnetic hold-down force without changing the contact adjustment or the hold-down pole-piece position.

Contact fingers and springs utilize a simple, reliable design and are heat treated to assure uniformity of material and contact stability. The heavy contact fingers extend through the base to serve as plug connectors. Heel contacts are actuated by operating arms pivoted to the armature. Contact surfaces have sufficient wiping action to be self-cleaning. "Standard" contact materials include fine silver heels and backs, and silver-impregnated carbon (S.I.C.) fronts with a typical capacity of 4A @ 30 Vdc or 175 Vac. "Heavy Duty" (H.D.)" contact materials also include fine silver heels and backs and silver-impregnated carbon (S.I.C.) fronts with a typical capacity of 15A @30 Vdc or 175 Vac.

Other types of contact material for special application are described with the particular relay. Standard contacts are factory-adjusted to standard minimum opening and conform to AREMA (AAR) requirements.

All vital plug-in relays incorporate a transparent molded cover over the relay contacts and armature structure. The cover is sealed to the frame with a gaskethat assures a tight, dust-proof and moisture-proof seal.

Contact Designations

Front and back contacts of plug-in relays are designated "F" and "B", respectively. The dependent contacts are denoted FB, while the independent contacts are denoted "F" or "B" alone.

Testing

Many US&S vital relays are provided a front testing capability. The front testing facility is in series with the coil control circuit to permit deenergization of the relay while it is in its service mounting, without disturbing the relay or wiring. Testing may also be accomplished through the rear of the relay mounting base without opening a contact or coil circuit. Refer to ***RSE-4S1*** for special tools utilized in maintaining US&S plug-in relays.

Latch

A spring-operated latch holds each plug-in relay securely to its mounting base. The latch is released by pressing a button on the front of the relay.

Indexing

All plug-in relays are equipped with indexing pins to prevent insertion of an incorrect relay into the mounting base. Each relay is accompanied by an indexing plate that is applied to the base at the initial installation.

System Voltage

This voltage, which is listed in the relay ordering tabulation specifications, is prescribed for relays in locally energized circuits. Higher voltage may be used, if required, up to 10 watts power dissipation.

UNION SWITCH & SIGNAL

UNION SWITCH & SIGNAL

PC-250B Biased Code Following Relay

General Description

The PC-250B relay is a biased relay designed for use as a code-following track or line relay. Two types of contacts are available: low voltage (L.V.) and high voltage (H.V.). The low voltage is silver platinum to silver platinum for use in circuits below 50 volts, while the high voltage is tungsten to tungsten for use in circuits above 50 volts to assure maximum operational life. However, the tungsten contacts cannot be employed in low voltage circuits due to the high contact resistance that they may develop. None of the PC-250B relays is equipped with front testing.

PC-250B relays are horizontally separated at least 5 inches, or the width of two PN-150 relays or one PN-250 relay. This spacing is designed to prevent magnetic interference between adjacent relays. The 5 inch space may be filled with any other type of PN-150 or 250 relay, except for the PC-250TR code generating relay.

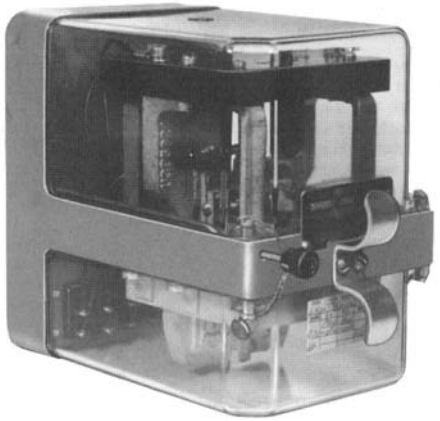

Solid-State Replacement

- Refer to ***RSE-4C4*** for US&S' new PN-250SS solid-state code following relay, which is a solid-state option for the PC-250B.

Specifications

- Refer to the ordering tabulation for operating specifications.

Ordering Information

- Standard relay and plug-in base order numbers listed in tabulation and RSE-4R1.
- When writing your order, specify the required contacts and coil resistance.
- Relay bases are ordered separately. Indicate the type of relay to be used with that base.
- For detailed specifications and complete parts lists, request US&S Service Manual SM-4570.

	PC-250B Relays and Base								
US&S Order No.	Contacts 1(F)	Contacts 2(B)	Contacts 3(F)	Contacts 4(B)	Coil Res.	Min. P.U. Amps	Max. F.S. Amp (1)	Min. D.A. Amps	System Volt.
N322559003	L.V.	L.V.	L.V.	L.V.	135.0	0.015	0.025	0.008	10 to 12
N322559004	H.V.	H.V.	H.V.	H.V.	135.0	0.015	0.025	0.008	10 to 12
N322559005	H.V.	H.V.	L.V.	L.V.	135.0	0.015	0.025	0.008	10 to 12
N322559008	L.V.	L.V.	L.V.	L.V.	0.3 400/400	0.060 0.6	0.780	0.41	--
N322559017	L.V.	L.V.	L.V.	L.V.	135.0	0.015	0.025	0.008	8 to 12
N438689003	Plug-In base for PC-250B (ref. RSE 4R1)								
	General note (a): Energization value - point where relay will become energized. Reponse will generall occur at some lower value. General note (b): Refer to RSE 4C4 for available solid-state replacements. Note (1): Maximum full stroke (Amps)								

(See reverse side for general features of US&S electro-mechanical vital relays.)

UNION SWITCH & SIGNAL

PC-250B Biased Code Following Relay

RSE-4N1
Rev. 7-03

General Features of US&S PN-Series Electro-Mechanical Vital Relays

US&S vital and non-vital plug-in relays serve a multitude of functions in both railroad and transit control circuit applications. These time-proven relays are space-saving, easily installed or removed and can be handled in the field without disturbing coil or contact wiring.

In addition to production of PN-series electro-mechanical relays at the same high standards, US&S also provides high-quality remanufacturing services for these relays so that they can be returned to service in like-new condition. Refer to the "Remanufacturing Services" of this catalog or call 1-800-652-7276 for additional information.

Advantages

- Wide selection available for every application
- Meets or exceeds applicable AREMA (AAR) requirements
- Plug-in design permits quick installation or removal
- Indexed to assure proper mounting
- Sturdy plug-in base for every relay model
- Operates over wide temperature range

High Quality Design and Assembly

All components of US&S plug-in relays are constructed according to rigid quality control standards and are thoroughly tested before shipment. Coils are encapsulated for protection against mechanical damage and moisture. Magnetic circuits are constructed of non-aging materials. The air gap is not disturbed when the coil is removed or the contact springs adjusted. Those relays with an adjustable magnetic shunt may be adjusted for degree of magnetic hold-down force without changing the contact adjustment or the hold-down pole-piece position.

Contact fingers and springs utilize a simple, reliable design and are heat treated to assure uniformity of material and contact stability. The heavy contact fingers extend through the base to serve as plug connectors. Heel contacts are actuated by operating arms pivoted to the armature. Contact surfaces have sufficient wiping action to be self-cleaning. "Standard" contact materials include fine silver heels and backs, and silver-impregnated carbon (S.I.C.) fronts with a typical capacity of 4A @ 30 Vdc or 175 Vac. "Heavy Duty" (H.D.)" contact materials also include fine silver heels and backs and silver-impregnated carbon (S.I.C.) fronts with a typical capacity of 15A @30 Vdc or 175 Vac.

Other types of contact material for special application are described with the particular relay. Standard contacts are factory-adjusted to standard minimum opening and conform to AREMA (AAR) requirements.

All vital plug-in relays incorporate a transparent molded cover over the relay contacts and armature structure. The cover is sealed to the frame with a gaskethat assures a tight, dust-proof and moisture-proof seal.

Contact Designations

Front and back contacts of plug-in relays are designated "F" and "B", respectively. The dependent contacts are denoted FB, while the independent contacts are denoted "F" or "B" alone.

Testing

Many US&S vital relays are provided a front testing capability. The front testing facility is in series with the coil control circuit to permit deenergization of the relay while it is in its service mounting, without disturbing the relay or wiring. Testing may also be accomplished through the rear of the relay mounting base without opening a contact or coil circuit. Refer to ***RSE-4S1*** for special tools utilized in maintaining US&S plug-in relays.

Latch

A spring-operated latch holds each plug-in relay securely to its mounting base. The latch is released by pressing a button on the front of the relay.

Indexing

All plug-in relays are equipped with indexing pins to prevent insertion of an incorrect relay into the mounting base. Each relay is accompanied by an indexing plate that is applied to the base at the initial installation.

System Voltage

This voltage, which is listed in the relay ordering tabulation specifications, is prescribed for relays in locally energized circuits. Higher voltage may be used, if required, up to 10 watts power dissipation.

UNION SWITCH & SIGNAL

RSE-4N2
Rev. 7-03

PC-250P Magnetic Stick Code Following Relay

General Description

The PC-250P relay is a magnetic stick code-following relay designed for transmitting “corrected code”. It is operated from a PC-250TR code-generating relay and is controlled through its own contact. This “corrected code” does not change, therefore contact wear on the code generator is compensated or “corrected”. Two types of contacts are available in PC-250P relays: low voltage (L.V.) and high voltage (H.V.). The low voltage is silver platinum-to-silver platinum for use in circuits below 50 volts, while the high voltage is tungsten-to-tungsten for use in circuits above 50 volts to assure maximum operational life. However, the tungsten contacts cannot be employed in low voltage circuits due to the high contact resistance that they may develop. None of the PC-250B relays is equipped with front testing.

PC-250P relays are horizontally separated at least 5 inches, or the width of two PN-150 relays or one PN-250 relay. This spacing is designed to prevent magnetic interference between adjacent relays. The 5 inch space may be filled with any other type of PN-150 or 250 relay, except for the PC-250TR code generating relay.

Specifications

- Refer to the ordering tabulation for operating specs.



Ordering Information

- Standard relay and plug-in base order numbers listed in tabulation and RSE-4R1.
- When writing your order, specify the required contacts and coil resistance.
- Relay bases are ordered separately. Indicate the type of relay to be used with that base.
- For detailed specifications and complete parts lists, request US&S Service Manual SM-4570A.

	PC-250P Relays and Base							
US&S Order No.	Contacts 1(F)	Contacts 2(B)	Contacts 3(F)	Contacts 4(B)	Coil Res.	Min. P.U. Amps	Max. P.U. Amps	Appl. Data
N322559013	L.V.	L.V.	L.V.	L.V.	180.0 180.0	0.011 0.011	0.013 0.013	8 to 12V
N322559014	N-H. V. R-L. V.	N-H. V. R-L. V.	L.V.	L.V.	20.0 20.0	0.031 0.031	0.035 0.035	--
N322559016	L.V.	L.V.	L.V.	L.V.	20.0 20.0	0.031 0.031	0.035 0.035	--
N322559018	N-H. V. R-L. V.	L.V.	L.V.	L.V.	20/20	0.031	0.035	8 to 12V
N438689003	Plug-In base for PC-250P (ref. RSE 4R1)							
	General note: Energization value - point where relay will become energized. Reponse will generall occur at some lower value.							

(See reverse side for general features of US&S electro-mechanical vital relays.)

UNION SWITCH & SIGNAL

PC-250P Magnetic Code Following Relay

RSE-4N2
Rev. 7-03

General Features of US&S PN-Series Electro-Mechanical Vital Relays

US&S vital and non-vital plug-in relays serve a multitude of functions in both railroad and transit control circuit applications. These time-proven relays are space-saving, easily installed or removed and can be handled in the field without disturbing coil or contact wiring.

In addition to production of PN-series electro-mechanical relays at the same high standards, US&S also provides high-quality remanufacturing services for these relays so that they can be returned to service in like-new condition. Refer to the "Remanufacturing Services" of this catalog or call 1-800-652-7276 for additional information.

Advantages

- Wide selection available for every application
- Meets or exceeds applicable AREMA (AAR) requirements
- Plug-in design permits quick installation or removal
- Indexed to assure proper mounting
- Sturdy plug-in base for every relay model
- Operates over wide temperature range

High Quality Design and Assembly

All components of US&S plug-in relays are constructed according to rigid quality control standards and are thoroughly tested before shipment. Coils are encapsulated for protection against mechanical damage and moisture. Magnetic circuits are constructed of non-aging materials. The air gap is not disturbed when the coil is removed or the contact springs adjusted. Those relays with an adjustable magnetic shunt may be adjusted for degree of magnetic hold-down force without changing the contact adjustment or the hold-down pole-piece position.

Contact fingers and springs utilize a simple, reliable design and are heat treated to assure uniformity of material and contact stability. The heavy contact fingers extend through the base to serve as plug connectors. Heel contacts are actuated by operating arms pivoted to the armature. Contact surfaces have sufficient wiping action to be self-cleaning. "Standard" contact materials include fine silver heels and backs, and silver-impregnated carbon (S.I.C.) fronts with a typical capacity of 4A @ 30 Vdc or 175 Vac. "Heavy Duty" (H.D.)" contact materials also include fine silver heels and backs and silver-impregnated carbon (S.I.C.) fronts with a typical capacity of 15A @30 Vdc or 175 Vac.

Other types of contact material for special application are described with the particular relay. Standard contacts are factory-adjusted to standard minimum opening and conform to AREMA (AAR) requirements.

All vital plug-in relays incorporate a transparent molded cover over the relay contacts and armature structure. The cover is sealed to the frame with a gaskethat assures a tight, dust-proof and moisture-proof seal.

Contact Designations

Front and back contacts of plug-in relays are designated "F" and "B", respectively. The dependent contacts are denoted FB, while the independent contacts are denoted "F" or "B" alone.

Testing

Many US&S vital relays are provided a front testing capability. The front testing facility is in series with the coil control circuit to permit deenergization of the relay while it is in its service mounting, without disturbing the relay or wiring. Testing may also be accomplished through the rear of the relay mounting base without opening a contact or coil circuit. Refer to ***RSE-4S1*** for special tools utilized in maintaining US&S plug-in relays.

Latch

A spring-operated latch holds each plug-in relay securely to its mounting base. The latch is released by pressing a button on the front of the relay.

Indexing

All plug-in relays are equipped with indexing pins to prevent insertion of an incorrect relay into the mounting base. Each relay is accompanied by an indexing plate that is applied to the base at the initial installation.

System Voltage

This voltage, which is listed in the relay ordering tabulation specifications, is prescribed for relays in locally energized circuits. Higher voltage may be used, if required, up to 10 watts power dissipation.

UNION SWITCH & SIGNAL

PN-150BE High Efficiency Biased Code Following Relay

General Description

The PN-150BE relay is a high efficiency biased relay used for a front contact repeater to decode a coded track relay. The circuit in which it is used can be designed to provide single-stroke immunity, yet remain energized during a code change. The PN-150BE relay can also be operated from a decoding unit. This relay is recommended for applications where more contacts are required. Contacts of the PN-150BE relay are standard low voltage silver to silver-impregnated front and silver-to-silver back. Front testing is not available.

PN-150BE relays are horizontally separated at least 5 inches, or the width of two PN-150 relays or one PN-250 relay. This spacing is designed to prevent magnetic interference between adjacent relays. The 5 inch space may be filled with any other type of PN-150 or 250 relay, except for the PC-250TR code generating relay.

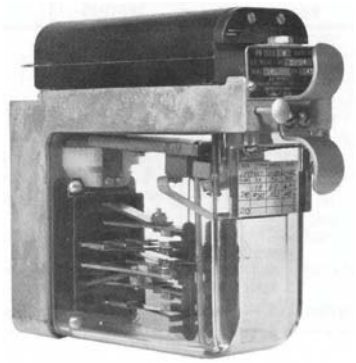

Specifications

- Refer to the ordering tabulation for operating specifications.

Ordering Information

- Standard relay and plug-in base order numbers listed in tabulation and ***RSE-4R1***.
- When writing your order, specify the required contacts and coil resistance.
- Relay bases are ordered separately. Indicate the type of relay to be used with that base.
- For detailed specifications and complete parts lists, request US&S Service Manual SM-4551L.

	PN-150BE Relay and Base					
US&S Order No.	Contacts	Coil Res.	Energ. Amps (1)	Energ. Volts (1)	System Volt.	Notes
N322513001	1FB, 1F, 1B Std.	60	0.0148	0.888	10	(2)
N322521002	1FB, 1F, 1B Std.	2000	0.0033	6.6	--	(2)
N4513760302	Plug-In base for PC-150BE (ref. RSE-4R1)					
	Note (1): Value at which relay will become energized. Response will generally occur at some lower value. Note (2): Contacts - 1: FB 2: B 3: F					

(See reverse side for general features of US&S electro-mechanical vital relays.)

UNION SWITCH & SIGNAL

RSE-4N3
Rev. 7-03

PN-150BE High Efficiency Biased Code Following Relay

General Features of US&S PN-Series Electro-Mechanical Vital Relays

US&S vital and non-vital plug-in relays serve a multitude of functions in both railroad and transit control circuit applications. These time-proven relays are space-saving, easily installed or removed and can be handled in the field without disturbing coil or contact wiring.

In addition to production of PN-series electro-mechanical relays at the same high standards, US&S also provides high-quality remanufacturing services for these relays so that they can be returned to service in like-new condition. Refer to the "Remanufacturing Services" of this catalog or call 1-800-652-7276 for additional information.

Advantages

- Wide selection available for every application
- Meets or exceeds applicable AREMA (AAR) requirements
- Plug-in design permits quick installation or removal
- Indexed to assure proper mounting
- Sturdy plug-in base for every relay model
- Operates over wide temperature range

High Quality Design and Assembly

All components of US&S plug-in relays are constructed according to rigid quality control standards and are thoroughly tested before shipment. Coils are encapsulated for protection against mechanical damage and moisture. Magnetic circuits are constructed of non-aging materials. The air gap is not disturbed when the coil is removed or the contact springs adjusted. Those relays with an adjustable magnetic shunt may be adjusted for degree of magnetic hold-down force without changing the contact adjustment or the hold-down pole-piece position.

Contact fingers and springs utilize a simple, reliable design and are heat treated to assure uniformity of material and contact stability. The heavy contact fingers extend through the base to serve as plug connectors. Heel contacts are actuated by operating arms pivoted to the armature. Contact surfaces have sufficient wiping action to be self-cleaning. "Standard" contact materials include fine silver heels and backs, and silver-impregnated carbon (S.I.C.) fronts with a typical capacity of 4A @ 30 Vdc or 175 Vac. "Heavy Duty" (H.D.)" contact materials also include fine silver heels and backs and silver-impregnated carbon (S.I.C.) fronts with a typical capacity of 15A @30 Vdc or 175 Vac.

Other types of contact material for special application are described with the particular relay. Standard contacts are factory-adjusted to standard minimum opening and conform to AREMA (AAR) requirements.

All vital plug-in relays incorporate a transparent molded cover over the relay contacts and armature structure. The cover is sealed to the frame with a gaskethat assures a tight, dust-proof and moisture-proof seal.

Contact Designations

Front and back contacts of plug-in relays are designated "F" and "B", respectively. The dependent contacts are denoted FB, while the independent contacts are denoted "F" or "B" alone.

Testing

Many US&S vital relays are provided a front testing capability. The front testing facility is in series with the coil control circuit to permit deenergization of the relay while it is in its service mounting, without disturbing the relay or wiring. Testing may also be accomplished through the rear of the relay mounting base without opening a contact or coil circuit. Refer to ***RSE-4S1*** for special tools utilized in maintaining US&S plug-in relays.

Latch

A spring-operated latch holds each plug-in relay securely to its mounting base. The latch is released by pressing a button on the front of the relay.

Indexing

All plug-in relays are equipped with indexing pins to prevent insertion of an incorrect relay into the mounting base. Each relay is accompanied by an indexing plate that is applied to the base at the initial installation.

System Voltage

This voltage, which is listed in the relay ordering tabulation specifications, is prescribed for relays in locally energized circuits. Higher voltage may be used, if required, up to 10 watts power dissipation.

UNION SWITCH & SIGNAL

PN-250BE Code Following Relay

General Description

The PN-250BE relay is used as a front contact repeater to decode a coded track relay. The circuit in which it is used can be designed to provide single-stroke immunity, yet remain energized during a code change. The PN-150BE relay can also be operated from a decoding unit. This relay is recommended for applications where more contacts are required. Contacts of the PN-150BE relay are standard low voltage silver to silver-impregnated front and silver-to-silver back. Front testing is not available.

PN-250BE relays are horizontally separated at least 5 inches, or the width of two PN-150 relays or one PN-250 relay. This spacing is designed to prevent magnetic interference between adjacent relays. The 5 inch space may be filled with any other type of PN-150 or 250 relay, except for the PC-250TR code generating relay.

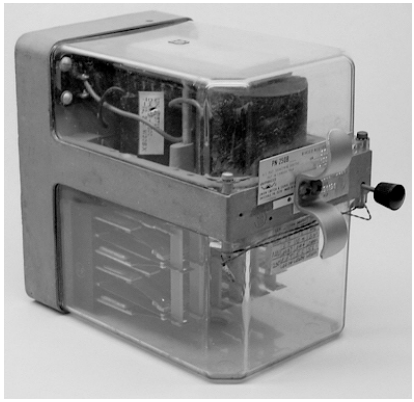

Specifications

- Refer to the ordering tabulation for operating specifications.

Ordering Information

- Standard relay and plug-in base order numbers listed in tabulation and ***RSE-4R1***.
- When writing your order, specify the required contacts and coil resistance.
- Relay bases are ordered separately. Indicate the type of relay to be used with that base.
- For detailed specifications and complete parts lists, contact your US&S Sales Representative.

	PN-250BE Relay and Base					
US&S Order No.	Contacts	Coil Res.	Min. D.A. (1)	Energ. Amps (2)	Energ. Volts (2)	System Volt.
N322550703	6FB Std.	55	0.57	0.0197	1.08	10
N438689001	Plug-In base for PC-250BE (ref. RSE 4R1)					
	Note (1): Minimum drop-away (front open) volts. Note (2): Value at which relay will become energized. Response will generally occur at some lower value.					

(See reverse side for general features of US&S electro-mechanical vital relays.)

UNION SWITCH & SIGNAL

PN-250BE Code Following Relay

RSE-4N4
Rev. 7-03

General Features of US&S PN-Series Electro-Mechanical Vital Relays

US&S vital and non-vital plug-in relays serve a multitude of functions in both railroad and transit control circuit applications. These time-proven relays are space-saving, easily installed or removed and can be handled in the field without disturbing coil or contact wiring.

In addition to production of PN-series electro-mechanical relays at the same high standards, US&S also provides high-quality remanufacturing services for these relays so that they can be returned to service in like-new condition. Refer to the "Remanufacturing Services" of this catalog or call 1-800-652-7276 for additional information.

Advantages

- Wide selection available for every application
- Meets or exceeds applicable AREMA (AAR) requirements
- Plug-in design permits quick installation or removal
- Indexed to assure proper mounting
- Sturdy plug-in base for every relay model
- Operates over wide temperature range

High Quality Design and Assembly

All components of US&S plug-in relays are constructed according to rigid quality control standards and are thoroughly tested before shipment. Coils are encapsulated for protection against mechanical damage and moisture. Magnetic circuits are constructed of non-aging materials. The air gap is not disturbed when the coil is removed or the contact springs adjusted. Those relays with an adjustable magnetic shunt may be adjusted for degree of magnetic hold-down force without changing the contact adjustment or the hold-down pole-piece position.

Contact fingers and springs utilize a simple, reliable design and are heat treated to assure uniformity of material and contact stability. The heavy contact fingers extend through the base to serve as plug connectors. Heel contacts are actuated by operating arms pivoted to the armature. Contact surfaces have sufficient wiping action to be self-cleaning. "Standard" contact materials include fine silver heels and backs, and silver-impregnated carbon (S.I.C.) fronts with a typical capacity of 4A @ 30 Vdc or 175 Vac. "Heavy Duty" (H.D.)" contact materials also include fine silver heels and backs and silver-impregnated carbon (S.I.C.) fronts with a typical capacity of 15A @30 Vdc or 175 Vac.

Other types of contact material for special application are described with the particular relay. Standard contacts are factory-adjusted to standard minimum opening and conform to AREMA (AAR) requirements.

All vital plug-in relays incorporate a transparent molded cover over the relay contacts and armature structure. The cover is sealed to the frame with a gaskethat assures a tight, dust-proof and moisture-proof seal.

Contact Designations

Front and back contacts of plug-in relays are designated "F" and "B", respectively. The dependent contacts are denoted FB, while the independent contacts are denoted "F" or "B" alone.

Testing

Many US&S vital relays are provided a front testing capability. The front testing facility is in series with the coil control circuit to permit deenergization of the relay while it is in its service mounting, without disturbing the relay or wiring. Testing may also be accomplished through the rear of the relay mounting base without opening a contact or coil circuit. Refer to ***RSE-4S1*** for special tools utilized in maintaining US&S plug-in relays.

Latch

A spring-operated latch holds each plug-in relay securely to its mounting base. The latch is released by pressing a button on the front of the relay.

Indexing

All plug-in relays are equipped with indexing pins to prevent insertion of an incorrect relay into the mounting base. Each relay is accompanied by an indexing plate that is applied to the base at the initial installation.

System Voltage

This voltage, which is listed in the relay ordering tabulation specifications, is prescribed for relays in locally energized circuits. Higher voltage may be used, if required, up to 10 watts power dissipation.

UNION SWITCH & SIGNAL

RSE-4P1
Rev. 7-03

PN-150BL Light Out Relay

General Description

The PN-150BL is a biased, power control relay used for checking lamp filaments. The 3-contact versions of this relay have an internal rectifier that permits main coil operation on both ac and dc lighting energy. The 5-contact PN-150BL relays require an external diode unit. This can be mounted on the rear of the mounting base. The 6-contact relays require an external bridge rectifier, which can also be mounted on the rear of the mounting base. Some PN-150BL relays have a single coil that permits checking of a lighted lamp. Other PN-150BL relays have two coils. One coil is used to check the lamp when not lighted. This is accomplished by applying a dc voltage across the lamp and the 175 ohm coil in series. If the lamp is good, the resulting current will energize the relay, but will not light the lamp.

PN-150BL relays N322526-801 and -901 require an external diode unit. Refer to the ordering tabulation for a diode available for mounting on the rear of the relay mounting base. PN-150BL relays N322528-801 and -901 requires an external bridge rectifier. Refer to the ordering tabulation for a bridge rectifier available for mounting on the rear of the relay mounting base.

Front testing is not available with the PN-150BL relays. Contacts are standard (Std.) low voltage silver to silver-impregnated carbon front and silver-to-silver backs.

Specifications

- Refer to the ordering tabulation for operating specs.

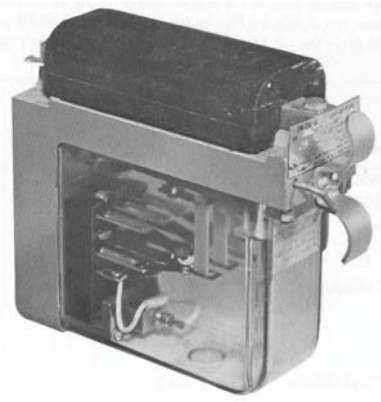

Ordering Information

- Standard relay, diode, bridge rectifier and plug-in base order numbers listed below.
- When writing your order, specify the required contacts and coil resistance.
- Relay bases are ordered separately. Indicate the type of relay to be used with that base.
- For detailed specifications and complete parts list, request US&S Service Manual 6144.

(See reverse side for general features of US&S electro-mechanical vital relays.)

	PN-150BL Relay, Diode, Rectifier and Base						
US&S Order No.	No. of Coils	Contacts	Coil Res.	Min. Full D.A.	Energization	Lamps Req.(1)	Notes
N322510801	1	3FB Std.	0.18	0.18	0.70	0.85 - 3.0	--
N322510802	1	3FB Std.	0.70	0.80	0.35	0.40 - 3.0	--
N322510803	2	3FB Std.	0.30 175.0	0.18 0.01 (1.89V)	0.70 0.042 (7.35V)	0.85 - 3.0	-- (2) (2)
N322526801	2	5FB Std.	0.30 175.0	0.18 0.01 (1.89V)	0.95 0.042 (7.35V)	1.0 - 3.0	(3) (2) (2)
N434909	Externally mounted diode for relay N322526-801.						
N4511432501	Externally mounted bridge rectifier for relay N322526-801.						
N4513760302	Plug-In base for PN-150BL+C272 (ref. RSE4R1)						
	General note: Energization value - point where relay will become energized. Reponse will generall occur at some lower value. Note (1): Use with lamps req. (AC Amps) Note (2): Minimum full drop-away (AC amps) and engerization (AC amps) values: DC Calibration. Values shown in parentheses () are volts. Note (3): Relay requires external diode unit N434909.						

UNION SWITCH & SIGNAL

PN-150BL Light Out Relay

RSE-4P1
Rev. 7-03

General Features of US&S PN-Series Electro-Mechanical Vital Relays

US&S vital and non-vital plug-in relays serve a multitude of functions in both railroad and transit control circuit applications. These time-proven relays are space-saving, easily installed or removed and can be handled in the field without disturbing coil or contact wiring.

In addition to production of PN-series electro-mechanical relays at the same high standards, US&S also provides high-quality remanufacturing services for these relays so that they can be returned to service in like-new condition. Refer to the "Remanufacturing Services" of this catalog or call 1-800-652-7276 for additional information.

Advantages

- Wide selection available for every application
- Meets or exceeds applicable AREMA (AAR) requirements
- Plug-in design permits quick installation or removal
- Indexed to assure proper mounting
- Sturdy plug-in base for every relay model
- Operates over wide temperature range

High Quality Design and Assembly

All components of US&S plug-in relays are constructed according to rigid quality control standards and are thoroughly tested before shipment. Coils are encapsulated for protection against mechanical damage and moisture. Magnetic circuits are constructed of non-aging materials. The air gap is not disturbed when the coil is removed or the contact springs adjusted. Those relays with an adjustable magnetic shunt may be adjusted for degree of magnetic hold-down force without changing the contact adjustment or the hold-down pole-piece position.

Contact fingers and springs utilize a simple, reliable design and are heat treated to assure uniformity of material and contact stability. The heavy contact fingers extend through the base to serve as plug connectors. Heel contacts are actuated by operating arms pivoted to the armature. Contact surfaces have sufficient wiping action to be self-cleaning. "Standard" contact materials include fine silver heels and backs, and silver-impregnated carbon (S.I.C.) fronts with a typical capacity of 4A @ 30 Vdc or 175 Vac. "Heavy Duty" (H.D.)" contact materials also include fine silver heels and backs and silver-impregnated carbon (S.I.C.) fronts with a typical capacity of 15A @30 Vdc or 175 Vac.

Other types of contact material for special application are described with the particular relay. Standard contacts are factory-adjusted to standard minimum opening and conform to AREMA (AAR) requirements.

All vital plug-in relays incorporate a transparent molded cover over the relay contacts and armature structure. The cover is sealed to the frame with a gaskethat assures a tight, dust-proof and moisture-proof seal.

Contact Designations

Front and back contacts of plug-in relays are designated "F" and "B", respectively. The dependent contacts are denoted FB, while the independent contacts are denoted "F" or "B" alone.

Testing

Many US&S vital relays are provided a front testing capability. The front testing facility is in series with the coil control circuit to permit deenergization of the relay while it is in its service mounting, without disturbing the relay or wiring. Testing may also be accomplished through the rear of the relay mounting base without opening a contact or coil circuit. Refer to ***RSE-4S1*** for special tools utilized in maintaining US&S plug-in relays.

Latch

A spring-operated latch holds each plug-in relay securely to its mounting base. The latch is released by pressing a button on the front of the relay.

Indexing

All plug-in relays are equipped with indexing pins to prevent insertion of an incorrect relay into the mounting base. Each relay is accompanied by an indexing plate that is applied to the base at the initial installation.

System Voltage

This voltage, which is listed in the relay ordering tabulation specifications, is prescribed for relays in locally energized circuits. Higher voltage may be used, if required, up to 10 watts power dissipation.

UNION SWITCH & SIGNAL

RSE-4Q1
Rev. 7-03

PN-150P Power-Off Relay

General Description

The PN-150P is an ac operated relay used to detect the presence of ac power and serve as a power-transfer device in the absence of ac power. In a typical application, this relay switches equipment over to standby power when primary ac is off. The PN-150P is a biased relay incorporating a built-in rectifier for ac use. One of its contacts is adjusted to open slightly in advance of the others. This enables the relay can operate with special stick circuits used in power transfer systems (i.e. highway crossing signals). Certain operating conditions, such as high resistance in the ac system, in fuse or wire connections, or poor regulation of the transformer supplying the ac load, might cause a sharp rise in ac voltage and thus intermittent opening and closing of the relay front contacts. With the advance-opening contact, the relay circuit is opened so that it drops regardless of any changes that may occur in the ac voltage thereafter. Refer to SM-4596F for additional information on this feature. Contacts of the PN-150P relay are heavy duty low voltage silver to silver impregnated carbon front and back. Front testing is available with this relay.

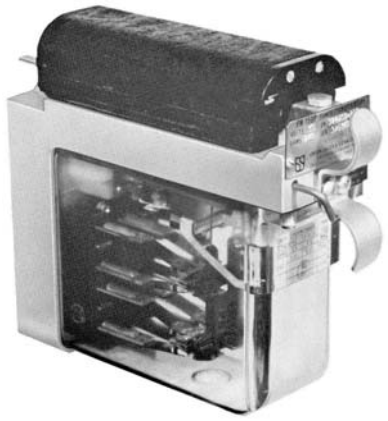

Ordering Information

- Standard relay and plug-in base order numbers listed below.
- When writing your order, specify the required contacts and coil resistance.
- Relay bases are ordered separately. Indicate the type of relay to be used with that base.
- For detailed specifications and complete parts list, request US&S Service Manual SM-4596F.

Specifications

- Refer to the ordering tabulation for operating specifications.

	PN-150P Relay and Base			
US&S Order No.	Contacts	Coil Res.	Energ. Volt. (1)	Nom. AC Volts
N322508702	4FB H.D. 1F/Std.	240	9.0	10
N322508703	4FB H.D. 1F/Std.	400	10.8	12
N4513760302	Plug-In base for PC-150P (ref. RSE 4R1)			
	Note (1): Value at which relay will become energized. Response will generally occur at some lower value.			

(See reverse side for general features of US&S electro-mechanical vital relays.)

UNION SWITCH & SIGNAL

PN-150P Power-Off Relay

RSE-4Q1
Rev. 7-03

General Features of US&S PN-Series Electro-Mechanical Vital Relays

US&S vital and non-vital plug-in relays serve a multitude of functions in both railroad and transit control circuit applications. These time-proven relays are space-saving, easily installed or removed and can be handled in the field without disturbing coil or contact wiring.

In addition to production of PN-series electro-mechanical relays at the same high standards, US&S also provides high-quality remanufacturing services for these relays so that they can be returned to service in like-new condition. Refer to the "Remanufacturing Services" of this catalog or call 1-800-652-7276 for additional information.

Advantages

- Wide selection available for every application
- Meets or exceeds applicable AREMA (AAR) requirements
- Plug-in design permits quick installation or removal
- Indexed to assure proper mounting
- Sturdy plug-in base for every relay model
- Operates over wide temperature range

High Quality Design and Assembly

All components of US&S plug-in relays are constructed according to rigid quality control standards and are thoroughly tested before shipment. Coils are encapsulated for protection against mechanical damage and moisture. Magnetic circuits are constructed of non-aging materials. The air gap is not disturbed when the coil is removed or the contact springs adjusted. Those relays with an adjustable magnetic shunt may be adjusted for degree of magnetic hold-down force without changing the contact adjustment or the hold-down pole-piece position.

Contact fingers and springs utilize a simple, reliable design and are heat treated to assure uniformity of material and contact stability. The heavy contact fingers extend through the base to serve as plug connectors. Heel contacts are actuated by operating arms pivoted to the armature. Contact surfaces have sufficient wiping action to be self-cleaning. "Standard" contact materials include fine silver heels and backs, and silver-impregnated carbon (S.I.C.) fronts with a typical capacity of 4A @ 30 Vdc or 175 Vac. "Heavy Duty" (H.D.)" contact materials also include fine silver heels and backs and silver-impregnated carbon (S.I.C.) fronts with a typical capacity of 15A @30 Vdc or 175 Vac.

Other types of contact material for special application are described with the particular relay. Standard contacts are factory-adjusted to standard minimum opening and conform to AREMA (AAR) requirements.

All vital plug-in relays incorporate a transparent molded cover over the relay contacts and armature structure. The cover is sealed to the frame with a gaskethat assures a tight, dust-proof and moisture-proof seal.

Contact Designations

Front and back contacts of plug-in relays are designated "F" and "B", respectively. The dependent contacts are denoted FB, while the independent contacts are denoted "F" or "B" alone.

Testing

Many US&S vital relays are provided a front testing capability. The front testing facility is in series with the coil control circuit to permit deenergization of the relay while it is in its service mounting, without disturbing the relay or wiring. Testing may also be accomplished through the rear of the relay mounting base without opening a contact or coil circuit. Refer to ***RSE-4S1*** for special tools utilized in maintaining US&S plug-in relays.

Latch

A spring-operated latch holds each plug-in relay securely to its mounting base. The latch is released by pressing a button on the front of the relay.

Indexing

All plug-in relays are equipped with indexing pins to prevent insertion of an incorrect relay into the mounting base. Each relay is accompanied by an indexing plate that is applied to the base at the initial installation.

System Voltage

This voltage, which is listed in the relay ordering tabulation specifications, is prescribed for relays in locally energized circuits. Higher voltage may be used, if required, up to 10 watts power dissipation.

UNION SWITCH & SIGNAL

RSE-4R1
Rev. 7-03

PN-150 and PN-250 Style Plug-In Relay Bases

US&S offers a complete line of mounting bases for PN-150 and PN-250 series plug-in relays. Molded in one piece, these bases have a lower profile than previous bases, yet provide a larger interior cavity for easier wire handling. Ordering references have been reduced to four part numbers each for the PN-150 and PN-250 style bases.



General Description

The PN-150 and PN-250 mounting bases are made from long-lasting, non-flammable polycarbonate thermoplastic material. They are constructed in one piece and are only 1-25/32" deep. Although this dimension is less than previous bases, the terminal cavity design provides greater volume. This permits easier wire engagement and extraction, for example, when using a #10-12 contact spring and two #10 wires. New receptacle springs have topside wiring to avoid improper alignments. Maintenance tools used to previous bases can also be used on the new bases.

The PN-150 and PN-250 bases incorporate an improved alpha-numeric nomenclature index that identifies cavity rows and relay contact locations. In this index, a given front is always numbered one less than its corresponding heel, and the heel is always numbered one less than its corresponding back. The matrix also allows quick identification of circuit locations where a circuit board is required on the backs of the base. All PN style relay bases are shipped with a full complement of receptacle contact springs for #14/#16 AWG wire. Contact springs for #10/#12 and #18/#20 wire are also available.

Advantages

- Made from tough, non-flammable plastic
- Lower profile, larger cavity volume expedites wiring
- Improved, easy-to-use nomenclature index

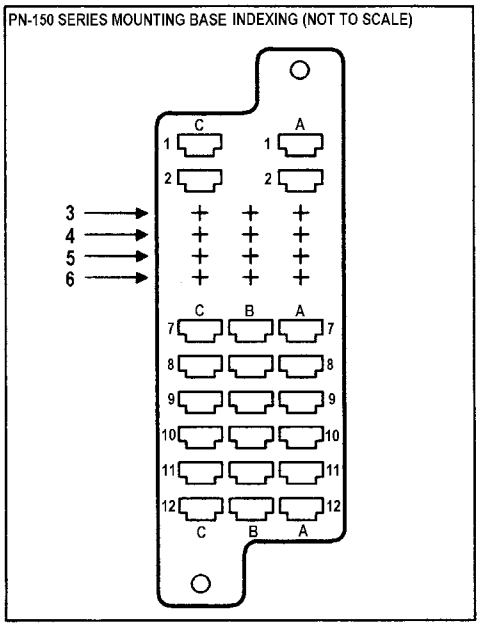

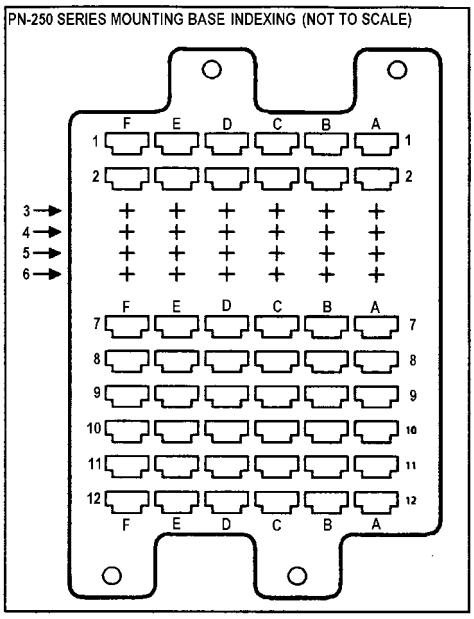

UNION SWITCH & SIGNAL

RSE-4R1
Rev. 7-03

PN-150 and PN-250 Style Plug-In Relay Bases

Ordering Information

- Refer to plug-in relay ordering tabulations to determine correct base for your relay(s).
- Bases and receptacle contact springs listed in separate ordering tabulation below.
- When ordering a replacement for an old style base or contact spring, refer to the cross-reference indexes below. Order service tools from ***RSE-4S1***.

	PN Relay Bases				
US&S Order No.	PN Type	Base	Hardware	Latch	Cont. Spring
N4513760301	PN-150	X	--	--	--
N4513760302	PN-150	X	X	--	#16
N4513760305	PN-150	X	X	--	#16
N438689	PN-250	X	--	Facing Right	--
N438689001	PN-250	X	X	Facing Right	--
N438689002	PN-250	X	--	Facing Left	--
N438689003	PN-250	X	X	Facing Left	--

	Contact Receptacle Springs	
US&S Order No.	Wire Sizes	Replaces(1)
M4511422701	#18-#20	J680179
M4511422702	#14-#16	J680165
M4511422703	#10-#12	J681181
	Note (1): Replaces contact springs for old stlye bases.	

Contact Spring

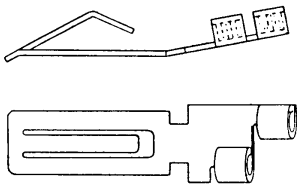

Cross-Reference Indexes (Old Style Bases to New Style Bases)

CROSS REFERENCE INDEX – PN-150 RELAY BASES

OLD ORDER NO.*	NEW ORDER NO.
N334266	N451376-0302
N335727	N451376-0302
N341626	N451376-0302
N341785	N451376-0302
N344874	N451376-0302
N349904	N451376-0302
N372344	N451376-0302
N376048	N451376-0302
N376439	N451376-0302
N382273	N451376-0302
N384259	N451376-0302
N398314	N451376-0302
N399506	N451376-0302
N399689	N451376-0302
N437090	N451376-0303
N438562	N451376-0302
N432995	N451376-0302
N433830	N451376-0302
N434814	N451376-0302
N436797	N451376-0303
N334266-099	N451376-0301
N335727-099	N451376-0301
N341626-099	N451376-0301
N341785-099	N451376-0301
N344874-099	N451376-0301

*Reference only.

OLD ORDER NO.*	NEW ORDER NO.
N349904-099	N451376-0301
N372344-099	N451376-0301
N376048-099	N451376-0301
N376439-099	N451376-0301
N398314-099	N451376-0301
N399506-099	N451376-0301
N399689-099	N451376-0301
N437090-099	J780055
N438562-099	N451376-0301
N432995-099	N451376-0301
N433830-099	N451376-0301
N436797-099	J780055
X334266-001	N451376-0302
X341626-001	N451376-0302
X344874-001	N451376-0302
X399689-001	N451376-0302
X432995-001	N451376-0302

*Reference only.

CROSS REFERENCE INDEX – PN-250 RELAY BASES

OLD ORDER NO.*	NEW ORDER NO.
N349769	N438689-001
N373979	N438689-003
N374117	N438689-001
N376442	N438689-003
N378609	N438689-003
N382814	N438689-003
N382816	N438689-003
N384243	N438689-001
N385205	N438689-001
N385788	N438689-001
N385790	N438689-001
N386458	N438689-003
N434647	N438689-003
N438695	N438689-003
N434650	N438689-003
N349769-099	N438689
N373979-099	N438689-002
N374117-099	N438689
N376442-099	N438689-002
N378609-099	N438689-002

* Reference only.

OLD ORDER NO.*	NEW ORDER NO.
N382814-099	N438689-002
N382816-099	N438689-002
N384243-099	N438689
N385205-099	N438689
N385790-099	N438689
N386458-099	N438689-002
N434647-099	N438689-002
N434650-099	N438689-002
X349769-001	N438689-001
X373979-001	N438689-003
X374117-001	N438689-001
X376442-001	N438689-003
X378609-001	N438689-003
X382814-001	N438689-003
X382816-001	N438689-003
X384243-001	N438689-001
X385205-001	N438689-001
X434647-001	N438689-003
X434650-001	N438689-003
X438695-001	N438689-003

* Reference only.

UNION SWITCH & SIGNAL

RSE-4R2
Rev. 7-03

PN-150 Style Relay Bases
GRS (Alstom)/Safetran-Compatible

General Description

US&S offers a GRS/Safetran-compatible plug-in relay base that allows US&S PN-150 series relays to be mounted within GRS/Safetran relay racks. This base allows front testing while the relay is installed. The base is made from a long-lasting, flame resistant, dimensionally stable thermoplastic material. The new base has permanent molded-in numeric nomenclature to identify columns and rows for relay contact locations, a large receptacle cavity to allow for easy insertion and extraction of relays and contact springs. Its topside contact spring wiring helps maintain proper alignment. The new design also provides for current or voltage testing from the front, without having to remove the relay.

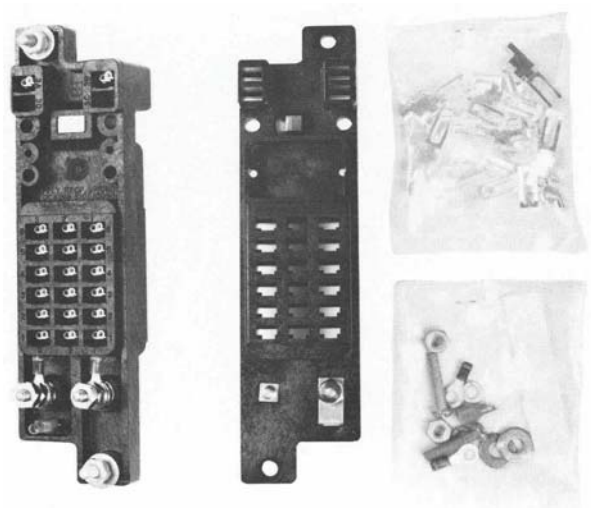

Advantages

- Allows mounting of PN-150 relays in non-US&S racks
- Enables front testing of relay
- Same user advantages as standard PN bases

Ordering Information

- Relay bases and receptacle contact springs listed in ordering tabulation.
- Bases shipped with contact receptacle springs for #14 to #16 wire.
- Springs for other wire sizes must be ordered separately.
- When ordering a replacement for an old style contact spring, refer to the
- See ***RSE-4R1*** for cross-reference index.
- See ***RSE-4S1*** for contact service tools.

	GRS/Safetran Bases and Contacts
US&S Order No.	
N4513760601	PN-150 series relay based kit: One base, mounted hardware, tags, instructions, bay of contact springs for #14 - #16 wire.
M4511422701 M4511422702 M4511422702	Receptacle contact spring for #18 to #20 wire. Receptacle contact spring for #14 to #16 wire. Receptacle contact spring for #10 to #12 wire.

UNION SWITCH & SIGNAL

Plug-In Relay Receptacle Contact Tools and Test Plugs

General Description

US&S provides quality hand tools for field maintenance of PN type vital relays. Wire-to-contact crimping tools are available for each of the three standard sizes of receptacle contact springs. These tools provide precisely-directed pressure on the contact to insure a mechanically and electrically sound connection with the wire conductor. For basic electrical testing of a mounted PN series relay, US&S provides front and back test plugs. These plugs allow contact-by-contact testing, without disturbing the relay or its wiring. The front testing plug also serves as a contact extraction tool. All of these tools can be used to service old style US&S contact receptacle springs.



Crimping Tool

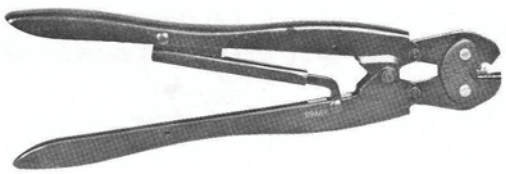

Ordering Information

- Refer to ordering tabulation for crimp tools and test plugs.
- When ordering a tool for an old style contact receptacle spring, check cross-reference index in ***RSE-4R1***.

Front Tester



Back Tester



	Contact Tools and Plugs
US&S Order No.	
J397139	Crimping tool for M451142-2702 receptacle contact springs.
J397138	Crimping tool for M451142-2703 receptacle contact springs.
J397188	Crimping tool for M451142-2701 receptacle contact springs.
J772383	Front Test Plug/Contact Extraction Tool
N322965	Back test plug

UNION SWITCH & SIGNAL

PN Relay Shelf Mounting Brackets and Frame

General Description

US&S provides individual shelf mounting brackets for all PN-150 and PN-250 series vital plug-in relays. These brackets are useful when modifying an existing signal control system (i.e. with shelf relays) to save shelf space. Two sizes of brackets are available. Single-size brackets mount the standard-width relays such as the PN-150B, while double size brackets mount the wider relays such as the PN-250B. Brackets can be ordered with or without terminal blocks. These blocks permit direct relay control or associated circuits to be opened from the front of the relay. The single-width bracket is equipped with three AREMA terminals, while the double width has six terminals. A nylon cable clamp holds wiring in position, without stressing the receptacle contact springs. Each bracket is a fully welded assembly and uses weld nuts where the mounting base screws enter the bracket. A black wrinkle paint finish is standard.

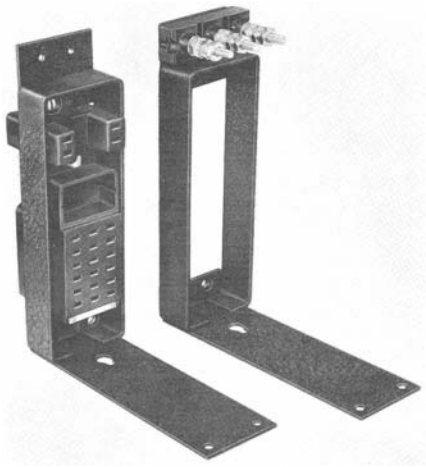

Single-Width Shelf Mounting Bracket

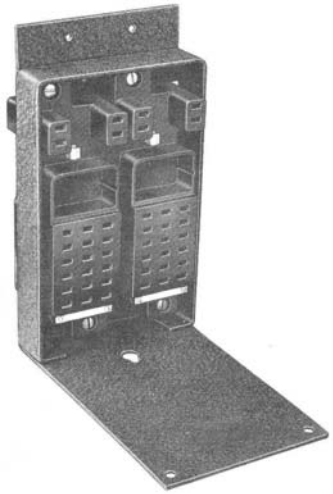

Double-Width Shelf Mounting Bracket

Shelf-mounting of multiple PN type relays is made possible with a 3” wide mounting frame. This frame fits into any 3’ 3-1/2” or larger equipment case and accepts up to 13 PN-150 type relays, up to 6 PN-250 type relays or combinations of both. Double rails along the length of the frame are designed to mount standard plug-in bases. Frames are available with 36 AREMA terminals or without. The frame is a cost-efficient means of shelf mounting many plug-in relays and lends itself to shop wiring conversion from shelf relays.

Ordering Information

- Refer to ordering tabulation for shelf mounting bracket and frame part numbers.
- Make sure to select correct bracket for single-width or double-width relays.

	Mounting Brackets and Frame		
US&S Order No.	Width	PN Style	Term. Block
N373826	Single	PN-150	X
N373904	Single	PN-150	--
N373828	Double	PN-250	X
N373914	Double	PN-250	--
N436182	Shelf Mounting Frame (w/o terminals)		

UNION SWITCH & SIGNAL

RSE-4T1
Rev. 7-03

PN Relay Shelf Mounting Brackets and Frame

Single-Width Shelf Mounting Bracket

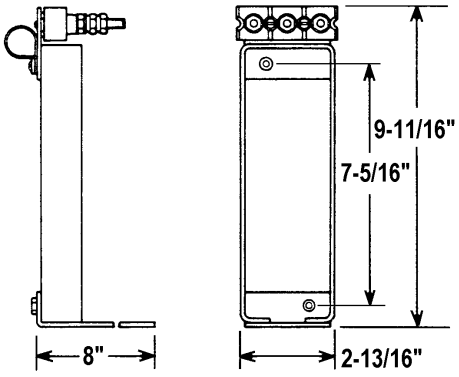

Double-Width Shelf Mounting Bracket

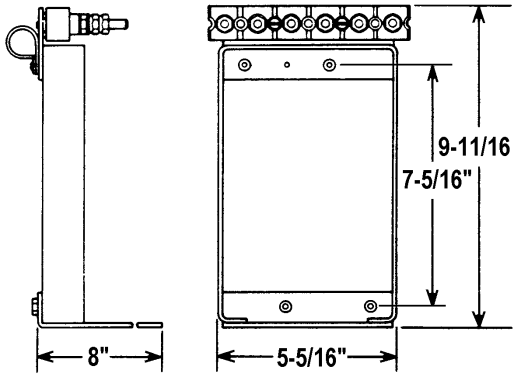

Shelf Mounting Frame

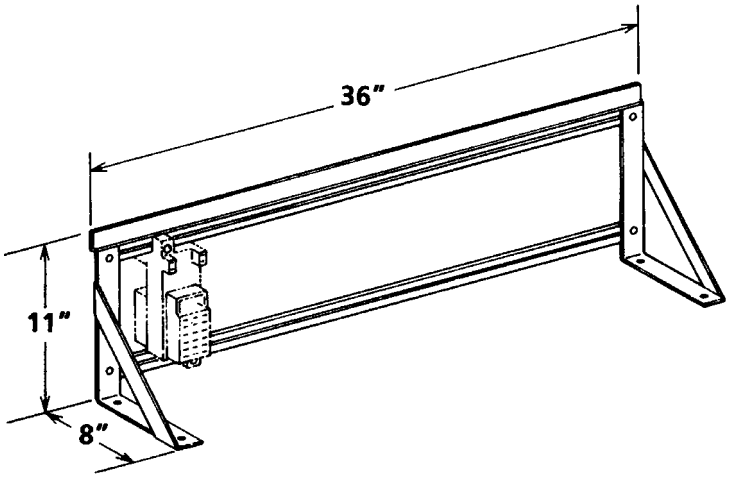



Highway Crossing Equipment

Gate Mechanisms and Flashing Lights

- Model 95 Crossing Gate Mechanism
- Model 95-Based Four Quadrant Gate Mechanism System
- HC-120B Flashing Light Units and Assemblies

Misc. Mast-Related Equipment

- Highway Crossing Masts
- Highway Crossing Mast Mechanical Attachments
- Highway Crossing Bell
- Highway Crossing Gate Arms
- Highway Crossing Gate Arm Counterweights
- Highway Crossing Signs

Misc. Crossing Equipment

- Highway Crossing Cantilevers
- Highway Crossing HX -1 Power Pack

UNION SWITCH & SIGNAL

RSE-5A1
Rev. 7-03

Model 95 Highway Crossing Gate Mechanism

US&S' Model 95 Highway Gate Crossing Mechanism is the new standard for simplicity, reliability, durability, ease of maintenance and value. It is completely reengineered from earlier models, meets or exceeds AREMA and other industry standards, and responds to customer requests for a state-of-the-art mechanism built with both safety and value in mind. The new mechanism represents a leap into the use of modern techniques and materials. Its modular design features an uncluttered mechanism with fewer moveable parts. Each unit part can be easily accessed and replaced in the field if necessary, making the Model 95 simpler to service. Models are available for standard highway vehicle crossing locations, sites with pedestrian sidewalks, and US&S' new Four-Quadrant Gate System (see *RSE-5A2*).

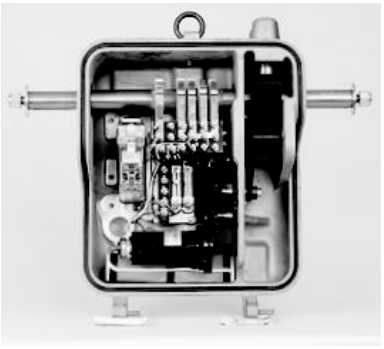



General Description

Completely redesigned to meet or exceed AREMA and American Association of Highway Officials' specifications, the Model 95 Gate Mechanism is a compact, easily maintained device. It features a cast aluminum housing and cover and is driven by a highly efficient and durable gear motor. The result is a smaller, lighter unit that is extremely serviceable and stronger than other models. In fact, the Model 95 is 100 pounds lighter than previous mechanisms, yet has a stall torque of 2,000 foot-pounds. Other features of the Model 95 include heavy duty coil springs for vertical and horizontal dampeners; availability with vital or non-vital relay; capability of indefinite motor stall; and higher-strength gears. The Model 95 is designed for ease of installation and ease of maintenance, with convenient access to the gear train.

During development testing of the Model 95, the gear motor prototypes performed to expectations through more than 200,000 operations. At an average of 10 trains a day, that translates to more than 55 years of operation. The Model 95 Gate mechanism has been adapted for a variety of applications including:

- Standard highway crossing entrance only
- Highway crossing entrance combined with pedestrian (sidewalk) gate
- Pedestrian sidewalk-only
- Highway crossing "Four-Quadrant Gate" system with entrance and "Exit" gate mechanisms (see ***RSE-5A2***)

Advantages

- Lightweight, compact design
- Re-engineered for increased durability and serviceability
- Capable of indefinite motor stall
- Self-restoring internal circuit breakers
- Cast aluminum housing
- Available with vital or non-vital relays

UNION SWITCH & SIGNAL

Model 95 Highway Crossing Gate Mechanism

RSE-5A1
Rev. 7-03

Advantages (cont'd)

- Highly efficient drive motor and gears
- Heavy duty horizontal and vertical buffers
- Built-in thermal and surge protection
- "Break-away" gate arm adapter
- Mechanisms with pedestrian and sidewalk crossing arms available
- Entrance and exit versions for US&S Quad Gate System

Design Features

Housing and Gate Arm

The Model 95 features a 1-piece cast aluminum housing and light weight removable cover (vertically hinged). A heavy-duty spring steel hasp on the housing latches the cover to the housing and accepts any standard padlock. Mounting may be done on 4", 5" and 10" masts. Overall, the Model 95 is smaller and about one-third lighter than similar mechanisms. Standard gate arm assemblies are easily fastened and wired to the Model 95 drive shaft. A universal breakaway adapter on the arm joint includes shear pins and a right angle, fall-away hinge to control separation of the arm if it is hit by a motor vehicle.

Within the housing, the electrical assembly is plate-mounted so that all of the electrical components can be easily removed and replaced.

Typical Highway Crossing Application

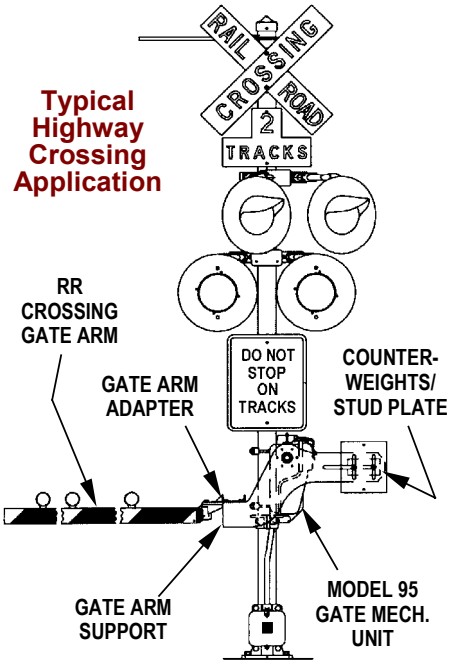

Typical Highway Crossing Application with Pedestrian Gate Arm

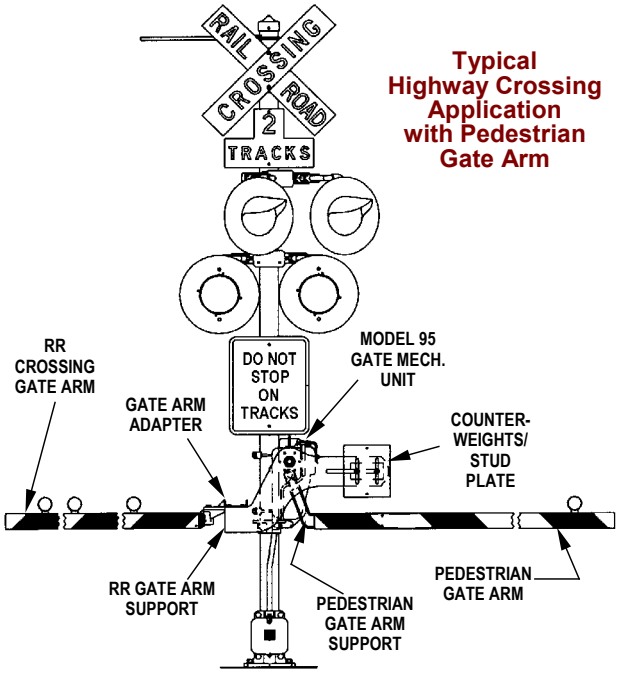

Typical Sidewalk (Pedestrian) Gate Arm Application

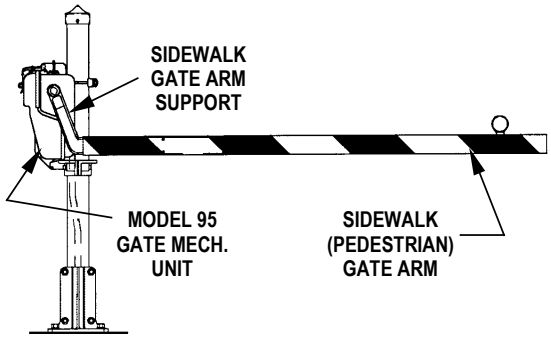

Model 95 Highway Crossing Gate Mechanism

UNION SWITCH & SIGNAL

RSE-5A1
Rev. 7-03

Design Features (cont'd)

Gearing and Drive Motor

The Model 95 includes a 2-stage, high-strength gear reduction mechanism. Heavy duty damper springs on the main drive shaft prevent any gate arm backlash into the gear train. The Model 95 is driven by a compact but powerful permanent magnet gear motor that generates more torque than larger and heavier motors in use. Stall torque is 2000 ft./lbs., a major improvement over the typical 1300 ft./lbs. rating of other gate mechanisms. Also, this motor is capable of moving the gate mechanism off balance with the gate arm missing. If needed, the motor shaft can also be hand cranked via a square shaft extension.

Motor Control Relay (MCR) contacts are used to control the drive motor. The unique snap-action contact design extends contact life, while helping to operate the mechanism more smoothly. The MCR is de-energized when the gate is clear; therefore none of the circuit controller contacts carry motor current.

The Model 95 incorporates a simplified hold-clear circuit using an electric brake. This device permits the gate to be locked in the upright position. The brake disengages and allows the arm to lower when a train approaches the gate mechanism. The Model 95 also has built-in self-restoring internal circuit breakers for thermal and voltage protection, which guard the device from damage due to harsh weather conditions, electrical storms and surges. It is also resistant to arm obstruction overload damage.

Electrical Controls

The Model 95 uses a dependable circuit controller that is easily accessed and designed to minimize contact burning. This allows for on-site operation with the gate arm missing. One adjustable resistor allows convenient setting of the arm descent speed.

Foundation Mounting

Standard pre-cast or poured concrete may be used as a foundation for the Model 95 Gate Mechanism (per AREMA guidelines). Bolt spacing is a standard four-bolt pattern spaced 11-11/16" on center for 5" junction box.

Installation and Adjustment Tools

The Model 95 Gate Mechanism is designed to be installed with standard tools. All gate mechanisms are shipped with a tool kit (N46707001). This kit includes Allen wrenches for buffer and cam adjustments, other various wrenches, and a hold down pin. A torque wrench, or a spring scale, or both is used to set the counterweights. US&S offers an optional torque wrench kit (X46700003) that includes a torque wrench and a socket.

Maintenance Switch

The Model 95 Maintenance Switch makes replacing a gate arm easier and safer by allowing the gate to be driven down without the weight of the gate arm to assist. This switch eliminates the need to connect jumpers inside the mechanism to drive the gate down. Selected models of the Model 95 (see ordering tab) are equipped with the Maintenance Switch as a built-in component. Retrofit Kit N46709202 permits switch installation in existing Model 95 Gate Mechanisms not already so equipped.

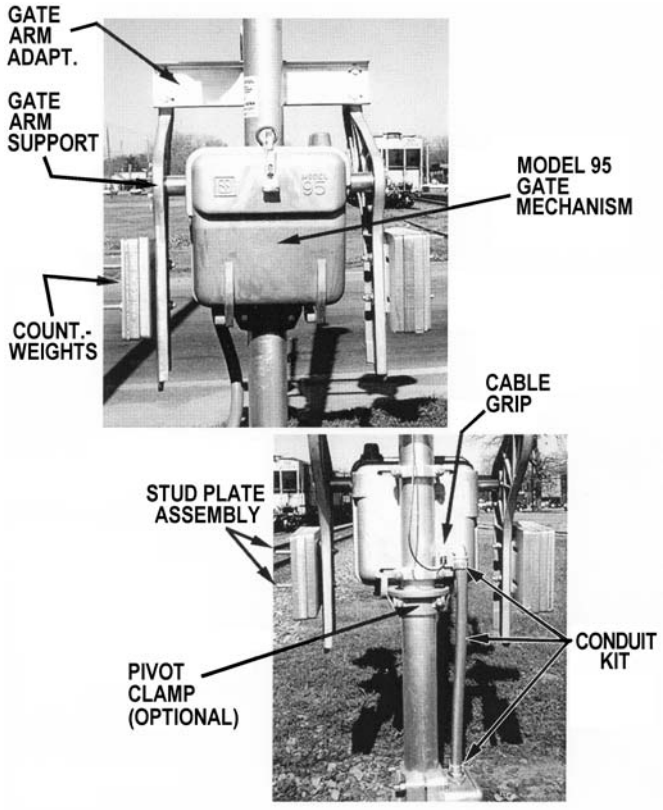

UNION SWITCH & SIGNAL

Model 95 Highway Crossing Gate Mechanism

RSE-5A1
Rev. 7-03

Additional Model 95 Applications

The Model 95 Pedestrian Gate Mechanism utilizes the same basic design as the standard highway crossing version, but is equipped with an additional 8 foot arm for deployment over a pedestrian sidewalk adjacent to the highway. Both the main highway arm and the pedestrian arm deploy at the same time and same speed from the internal mechanism. Versions of this mechanism are available with vital or non-vital relay. Gate arm support hubs permit right-hand or left-hand placement of the pedestrian arm.

In addition to the complete Highway/Pedestrian assembly, US&S provides several retrofit kits for converting an existing Model 95 crossing mechanism to include the pedestrian arm feature.

The Model 95 Sidewalk Gate mechanism is also based on the standard gate mechanism, but is only equipped with the 8 foot pedestrian arm for locations where only a pedestrian sidewalk crosses the tracks. Left and right-hand arm versions are available with this assembly.

The Model 95 Exit Gate Mechanism is an integral part of US&S' "Four-Quadrant Gate" system. This gate mechanism is mounted on the signals installed on the exit-side of the crossing (the side through which a motor vehicle must pass when leaving the crossing). It is designed to raise should power to the highway-crossing warning system fail, thus preventing a motor vehicle being trapped on the crossing by a down gate blocking the crossing location's exit-side lane. Refer to ***RSE-5A2*** for additional details.

Specifications

Dimensions:	23" H x 21"W x 13-3/4"D
Weight:	185 lbs. with cover, 160 lbs. without cover
Mounting:	4", 5" and 10" pipe masts
Handling:	Eyebolt for lifting
Motor Voltage:	12 Vdc or 24 Vdc
Motor Current:	15.0 A
Motor Stall Torque:	2000 ft./lbs.
Hold Clear (Elec. Brake):	12 Vdc unit: 150 to 160 mA
	24 Vdc unit: 185 mA
Circuit Breaker Current:	12 Vdc unit: 20A
	24 Vdc unit: 10A
Ckt. Brkr. Opening Time:	100% of load rating for 1 hour
	125% of load rating for up to 1 hr.
	200% of load rating within 1 min.
Ckt. Brkr. Reset:	Within 1 minute to several min.
Heater:	25W resistive element
	Voltages: 24V, 120V, 240V
Motor Relay:	PN-150HD vital plug-in (see ***RSE-4E2***) or non-vital

Ordering Information

- Refer to ordering tabulation to order the following Model 95 items:
  - Standard highway crossing entrance mechanism
  - Highway crossing mechanism with pedestrian (sidewalk) gate arm
  - Pedestrian (sidewalk) gate mechanism only
  - Misc. key replacement and maintenance parts and tools
- If replacing a non-US&S gate mechanism with the Model 95, gate arm supports must be ordered.
- Model 95 Exit Gate Mechanism only available as part of "Quad Gate" system; contact your US&S Account Executive for details and any other special equipment configurations required.
- Request the following US&S Service Manuals for other replacement parts:
  - SM-6495 for highway, pedestrian and sidewalk gate mechanisms
  - SM-6495A for pedestrian gate mechanism retrofit kit items
  - SM-6495C for Maintenance Switch retrofit kit items.

Model 95 Highway Crossing Gate Mechanism

UNION SWITCH & SIGNAL

RSE-5A1
Rev. 7-03

Ordering Information (cont'd)

	Model 95 Gate Mechanisms and Assemblies for Highway Crossings					
US&S Order No.	Mech.	Assembly (1)	Relay Type	Maint. Switch	Heater	Notes
N46780101	X	--	Non-Vital	--	--	--
N46780201	X	--	Vital	--	--	--
X46740201	X	X	Non-Vital	--	--	--
X46740202	X	X	Vital	--	--	--
N46780106	X	--	Non-Vital	X	X	
X46700014	X	X	Non-Vital	X	X	(1)
N46710401	X	--	--	X	X	(2)
	Note (1): Assembly includes (in addition to Gate Mech.) LH and RH gate arm support w/hubs, gate arm adapter, conduit kit and stud plate. Note (2): "Exit" type gate mechanism					

	Model 95 Pedestrian Gate Mechanism (Highway and Sidewalk Crossings in same unit)				
US&S Order No.	Mech.	Assembly (1)	Relay Type	Maint. Switch	Heater
N46780301	X	--	Vital	--	--
N46780401	X	--	Non-Vital	--	--
X46740210	X	X	Non-Vital	--	--
X46740211	X	X	Vital	--	--
	Note (1): Assembly includes (in addition to gate mech.) LH and RH gate arm support w/hubs, gate arm adapter, conduit kit and stud plate.				

	Model 95 Sidewalk Gate Mechanism (No Highway Crossing Gate)
US&S Order No.	
N46780103	Gate Mechanism with Right Side Arm
N46780104	Gate Mechanism with Left Side Arm

	Model 95 Kits and Key Components
US&S Order No.	
N46709202	Model 95 Maintenance Switch only
J0702050438	Hold Clear (Electric Brake)
N46703602	12 Vdc Motor
X46705402	Pivot Clamp Assembly
X46700003	Torque Wrench Kit
N46704801	Heater Kit (120V)
N46704802	Heater Kit (24V)
N46704803	Heater Kit (240V)
N46730101	Left-hand gate arm support with hubs
N46730201	Right-hand gate arm support with hubs
X46700001	Stud Plate for counterweight mounting
X46700002	Conduit Kit
N46780403	Ped. Gate Arm Retrofit Kit: With non-vital relay
N46780304	Ped. Gate Arm Retrofit Kit: With vital relay

UNION SWITCH & SIGNAL

UNION SWITCH & SIGNAL

Model 95-Based Four Quadrant Gate Mechanism System

Safety at highway grade crossings long has been a concern of railroads, rail-transit properties and government at local, state and federal levels. At issue are impatient motorists who circumvent down crossing gates in an attempt to drive over the crossing before the arrival of a train. This frequently meets with fatal results to motorists and train crews. These concerns are especially acute in high-speed rail territory, where grade separation of highways and railways is not possible - and where the speed of the train makes it nearly impossible for the train operator to stop the train once the crossing comes into view and a motor vehicle stalled on the crossing becomes visible. To address these concerns and to attempt to improve grade-crossing safety for both motor vehicles and trains, particularly at high-speed locations, US&S has developed the Four-Quadrant Gate Highway-Crossing Warning System.







General Description

With the US&S Four-Quadrant Gate Highway-Crossing Warning System, the grade crossing is treated as an interlocked junction between two rights-of-way, the street and the railroad track. The system primarily consists of four highway-crossing signal/gate assemblies, an inductive motor-vehicle detection loop, a vital/non-vital processor, a cab signal system interface in rail territory equipped with cab signaling, and approach and island track circuits. Gate operation is controlled so that motor vehicles will not be trapped on the crossing during the approach of a train.

Signal/Gate Assemblies

Two Model 95 signal/gate assemblies are installed on each side of the track so the highway is completely blocked on both sides of the rail right-of-way when the gates are down and a train is approaching the crossing. These gate mechanisms are mounted on the signals installed on the exit-side of the crossing (the side through which a motor vehicle must pass when leaving the crossing) and are designed to raise should power to the highway-crossing warning system fail. The entrance gates during such a circumstance will fall to the down position. This mitigates the possibility of a motor vehicle being trapped on the crossing by a down gate blocking the crossing location's exit-side lane.

Loop Detectors

Loop detectors are buried beneath the crossing surface for detecting motor vehicles. Since the loop detectors' inductance varies whenever a motor vehicle passes over the crossing, the presence of a motor vehicle on the crossing will be detected. The loop output is sent to the warning system's vital/non-vital processor. If a vehicle is on the crossing when a train approaches and activates the highway-crossing

UNION SWITCH & SIGNAL

RSE-5A2
Rev. 7-03

Model 95-Based Four Quadrant Gate Mechanism System

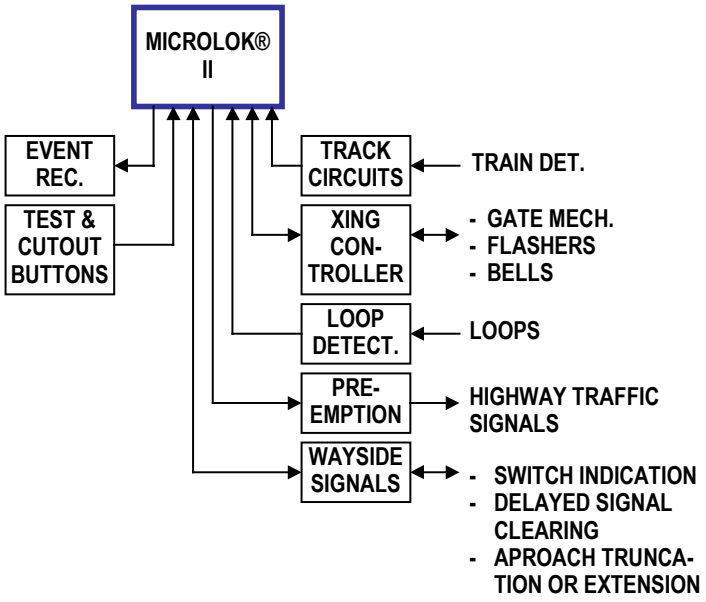

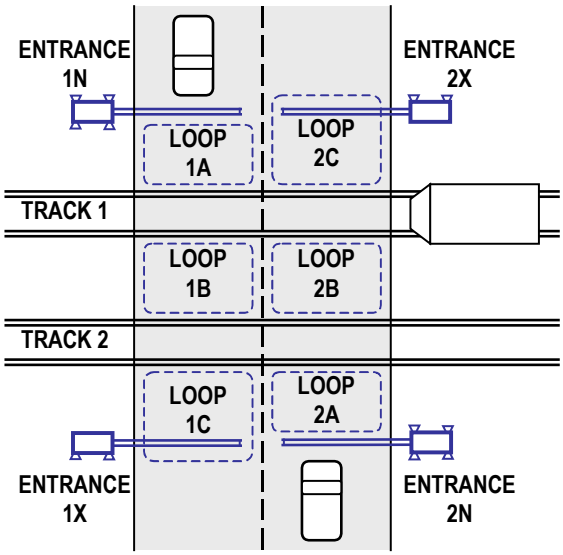

General Description (cont'd)

warning system, the exit gates will remain raised to allow the vehicle to exit the crossing. Once again, this feature provides an exit for the vehicle so it's not trapped on the crossing by all four gates being down.

MicroLok® II Vital/Non-Vital Processor

The US&S MicroLok II Wayside Control System functions as a vital/non-vital processor, and serves as the heart of the control system. It executes the vital logic required for gate operation, motor-vehicle detection, and the locomotive cab indications (VMI in cab signal territory) that alert the train engineer of a motor vehicle (or other obstruction) on the crossing. This processor also tests for loop-detector faults, crossing-system intrusion and broken gates, and, if any of these conditions are detected, it generates a maintenance call. Refer to ***RSE-1A1*** for additional details on the MicroLok II system.

Track Circuits

Track circuits detect the presence of a train within the crossing approaches and on the island (where track and road meet) and initiate operation of the highway-crossing warning system.

Advantages

- Four-quadrant gate highway-crossing configuration.
- Motor-vehicle detection.
- Issues locomotive-cab warning: Alerts train engineer of motor vehicle or other obstruction at the crossing so a train can stop before reaching the crossing.
- Gate-down indication.
- Broken-gate detection and indication.
- Counterbalanced exit gates rise if power fails so motor vehicles are not trapped in the crossing.
- Defective loop-detector test and indication.
- Abnormal-condition detection and indication.

Operation

With no train approaching the crossing, the gates are vertical, the flashing warning lights on the signal gate assemblies are dark, the warning bell is silent and track-circuit relays are energized. The vital portion of the MicroLok II system constantly monitors the status of the loop detectors that indicate whether a motor vehicle is traveling over or is stopped on the crossing.

Model 95-Based Four Quadrant Gate Mechanism System

UNION SWITCH & SIGNAL

Operation (cont'd)

Loop status information also is passed to the non-vital portion of the MicroLok II processor, which directs the information to a data logger for recording.When a train enters one of the highway-crossing warning system's approach track circuits, the approach track-circuit relay is deenergized, the warning lights begin to flash, the bell begins to ring, and the vital processor checks if the crossing is occupied by a motor vehicle or other obstruction. If the crossing is clear (as determined via input from the motor-vehicle detection loops), the MicroLok II processor will allow the gates to begin their descent seven seconds after the activation of the lights and the bell.

If, however, the crossing is blocked by a motor vehicle, for example, the MicroLok II processor will allow the gates guarding the entrance lanes of the crossing to descend, but it will keep the exit gates raised to allow the vehicle to exit the crossing. At the same time, the locomotive cab signal (in cab signal territory) will be reduced from a clear indication to an approach-medium indication. If the crossing still is not clear 10 seconds later, the cab signal is reduced to an approach indication, and then to a restrictive indication 10 seconds later if the crossing still is obstructed. These cab-signal reduction points are located so the train can stop before reaching the crossing and, in the case of passenger trains or rail-transit vehicles, without causing alarm or discomfort among the passengers.

Application

While the US&S Four-Quadrant Gate Highway-Crossing Warning System can be applied at any highway grade-crossing location, it's most effective in areas (railroad or rail transit) equipped with cab signaling/on-board vehicle control, where it can alert train operators to a motor vehicle or other obstruction on the crossing.

Specifications and Ordering Information

- Contact your US&S Account Executive for detailed specifications, applications possibilities and ordering information.

MicroLok ® is a registered trademark of Union Switch & Signal Inc.

UNION SWITCH & SIGNAL

Highway Crossing Equipment

UNION SWITCH & SIGNAL

RSE-5B1
Rev. 7-03

HC-120B Flashing Light Units and Assemblies

US&S' HC-120B Flashing Lights meet or exceed industry standards for motorist visibility at highway crossings in all types of environments and installations, and are designed for maximum ease of maintenance. At the heart of the HC-120B assembly is an LED-based light unit that is simpler in design, longer lasting and consumes much less power than comparable incandescent lamp units. The HC-120B is available in a variety of multi-light assembly configurations, as well as individual light unit designs. Included is a retrofit version that allows replacement of existing incandescent light units with the new LED technology.



General Description

Flashing Light Assemblies

HC-120B Flashing Light assemblies utilize all-aluminum brackets and junction box crossarms, and are provided with two light units for 1-way configurations, or four light units for 2-way configurations. Selected models of the 2-way version are available with extension arms for additional clearance on the highway crossing mast. Clear access for wiring is provided through a threaded crossarm mounting fitting. Threaded elbows permit independent horizontal (azimuth) and vertical (range) adjustment of each signal. Standard AREMA terminals serve as quick connect/disconnect points. Light unit options include the new LED or traditional incandescent models; these can be outfitted with a variety of hoods and backgrounds made of high durability plastic or aluminum. HC-120B assemblies can be mounted on 4" or 5" masts, and selected models are designed for use with US&S' Model 95 Gate Crossing Mechanism.

Flashing Light Units

HC-120B Flashing Light units combine the best features of existing housing design with LED light source technology, and are compliant with both AREMA and AASHO standards. The external cast-aluminum shell is fully sealed against water and dust, and incorporates a sighting device that permits field alignment on the arm assembly by just one person. The rear of the unit is equipped internally with an AREMA-approved terminal strip that allows quick connect and disconnect of light module and external wiring. Hood and background options include 20" or 24" diameter and high impact plastic or aluminum construction.

The LED-based HC-120B light module generates light via a matrix of 360 or 141 high-efficiency LEDs that form a coherent beam when viewed externally. The combined LEDs are brighter than similar incandescent units and consume 40% less power than a comparable incandescent lamp with the same brilliance. As a result, the HC-120 light module helps extend the life of back-up batteries at the crossing location when these batteries are needed. The LED matrix has an estimated operating life of 100,000 hours; in the event a single LED fails, overall beam intensity is reduced by less than 2 percent. Optically, this unit replaces earlier lights with $30^{o}/15^{o}$, $20^{o}/32^{o}$, $70^{o}/0^{o}$ spread and deflection patterns.

The HC-120B LED light module incorporates a 12" hard-coated polycarbonate red lens that is both vandal and water-resistant, and red-tinted to optimize the LED light wavelength. Bright LED side lights (white) are included to enable the locomotive engineer to confirm the flashing light is operational. The module housing is also equipped with air vents and a perimeter rubber gasket for water and dust protection. Selected light modules also incorporate a built-in voltage regulator to ensure against overvoltage damage from the external power supply. Lightning and surge protection circuitry is also provided. The complete light module is mounted in the external housing with four mounting clips, and is connected to the housing terminal strip with two #18 AWG wires.

As shown in the ordering tabulation, a retrofit kit version of the HC-120B LED light module is available for direct replacement of 12" incandescent lamp units. No special modifications are required on the flashing light assembly or housing when upgrading to the LED lamp.

Advantages

- 1 or 2-way mast-mounted arm assemblies available
- AREMA and AASHO-compliant design
- LED module brighter than incandescent lamps
- LED module uses high efficiency red LEDs
- Consumes 30% less power than incandescent lamps
- Increased available battery back-up time for highway crossing warning systems

UNION SWITCH & SIGNAL

RSE-5B1
Rev. 7-03

HC-120B Flashing Light Units and Assemblies

LED Light Unit



Specifications (LED Light Module)

LED Types:	Red and white, non-regulated.
LED Loss:	<2% of total output with loss of 1 LED
LED Life:	100,000 hours @ 10 volts
Total Luminosity:	705 Candelas (calculated)
Light Source Matrix	14 parallel strings of 10 leds in series
Light Wavelength:	630 nm (dominant)
Viewing Angle:	30 degrees
Overall Dimensions:	12” diameter, 5” depth (approx.)
Side Lights:	6-LED light units (white), 180 deg. spacing, 34.8 Candelas per side
Current Draw:	10 volts = 1 Amp
Operating Power:	10 Vac or 10 Vdc (nom.), +1.5V
Regulated Range:	6 to 18 Vdc, 5 to 13 Vac
Power Consumption:	10W @10 Vdc
LED Current Limit:	10 volts (max.)
VA Limit:	12 VA @10 volts
Wiring:	Two #18 AWG wires with crimped 1/4” RWG terminals

Operating Temp.: 30°C to +85°C

Advantages (Cont’d)

- Sufficient light output is maintained if discrete LED failure should occur
- Cast aluminum water-tight housing with side-view lights
- Polycarbonate lens (0.125” thick) tinted to match LED wavelength
- Replaces lights with 30°/15°, 20°/32°, and 70°/0° spread and deflection patterns

Flashing Light Assemblies with Junction Box Cross Arms

Figure “A”. 2-Way Back-to-Back Flashing Light Assembly

(For use without gate mechanisms)

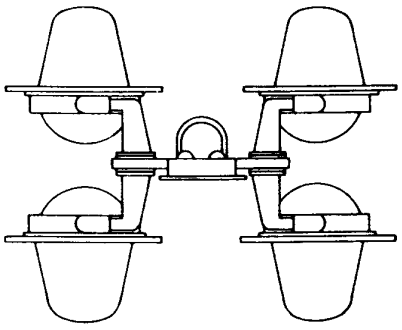

Figure “B”. 1-Way Flashing Light Assembly

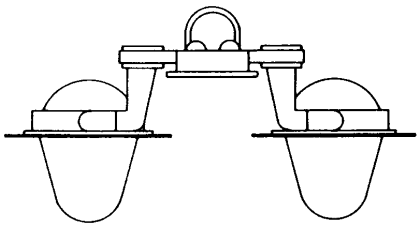

Figure “C”. 2-Way Flashing Light Assembly for use with Gate Arm assemblies

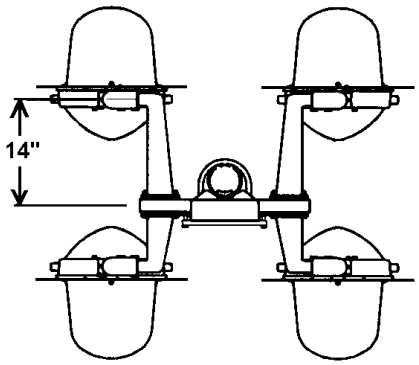

HC-120B Flashing Light Units and Assemblies

UNION SWITCH & SIGNAL

RSE-5B1
Rev. 7-03

Ordering Information

- Refer to ordering tabulations below for HC-120B assemblies, flashing light units and associated replacement/retrofit components.
- Refer to figures on page 2 and 4 for various assembly configurations.
- Contact your US&S Account Executive for HC-120B configurations not shown in ordering tabulation, and for replacement parts.

HC-120B Flashing Light Unit Assemblies

US&S Order No.	Light Unit Type	Mast	Configuration	Spread	Extension Arms	Ref. Fig.	Notes
X4515060317	LED	5"	1-way	30-70	--	"B"	(1)
X4515060318	LED	5"	2-way	30-70	--	"A"	(1)
X4515060319	LED	5"	2-way	30-70	X	"C"	(1)
X4515060320	LED	5"	2-way	30-70	--	"A"	(2)
X4515060103	Incandescent	4"	1-way	30º-15º	--	"B"	--
X4515060104	Incandescent	4"	2-way	30º-15º	--	"A"	--
X4515060303	Incandescent	5"	1-way	30º-15º	--	"B"	--
X4515060306	Incandescent	5"	2-way	30º-15º	--	"A"	--
X4515060308	Incandescent	5"	2-way	30º-15º, 30º-15º	X	"C"	(1)
X4515060312	Incandescent	5"	2-way	30º-15º, 70º-0º	X	"C"	(1)

Note (1): Used with Model 95 Gate Mechanism (see RSE 5A2) hoods and 20" backgrounds included.
Note (2): Includes plastic hood and background.

XA-120 Junction Box Crossarms

US&S Order No.	One Way	Two Way	For Use with Gate Mechs.	Ref. Fig.
X46709307	X	--	--	"D"
X46109314	--	X	X	"E"
N46712501	X	X	--	"F"
N46712502	--	--	X	"G"

General note: All above 5" mast.

HC-120B Hoods & Backgrounds

US&S Order No.	
M4514982501	Hood, Metal (Aluminum)
M46100701	Hood, Plastic
M46100802	Background, 20" Plastic
M46100801	Background, 24" Plastic
M4514983701	Background, 20" Metal (Aluminum)
M4514983702	Background, 24" Metal (Aluminum)

HC-120B Light Units

US&S Order No.	Light Unit Type	No. of LEDs	Spread	Sidelights	Regulator	Notes
N46100401	LED	360	30º-70º	--	--	--
N46100403	LED	360	30º-70º	X	--	--
N46100601	LED	360	30º-70º	--	--	(1)
N46100602	LED	360	30º-70º	X	--	(1)
N46711101	LED	141	30º-70º	X	X	--
N46711102	LED	141	30º-70º	X	X	(3)
N46711103	LED	141	30º-70º	X	X	(4)
N46711104	LED	141	30º-70º	X	X	(5)
N46100604	LED	141	30º-70º	X	X	(2)
N4514970602	Incandescent	--	30º-15º	--	--	--

Note (1): Kit for replacement of HC-120B incandescent light unit.
Note (2): Incorporates 4 sidelights
Note (3): With 24" hoods and backgrounds
Note (4): With 20" aluminum hoods and backgrounds
Note (5): With 24" plastic hoods and backgrounds

UNION SWITCH & SIGNAL

RSE-5B1
Rev. 7-03

HC-120B Flashing Light Units and Assemblies

Figure “D”. XA-120 Junction Box Cross Arm Order No. X46709307 (for 1-Way Flashing Light Assemblies)

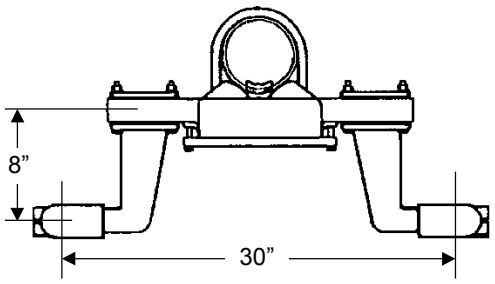

Figure “E”. XA-120 Junction Box Cross Arm Order No. X46709314 (for 2-Way Flashing Light Assemblies)

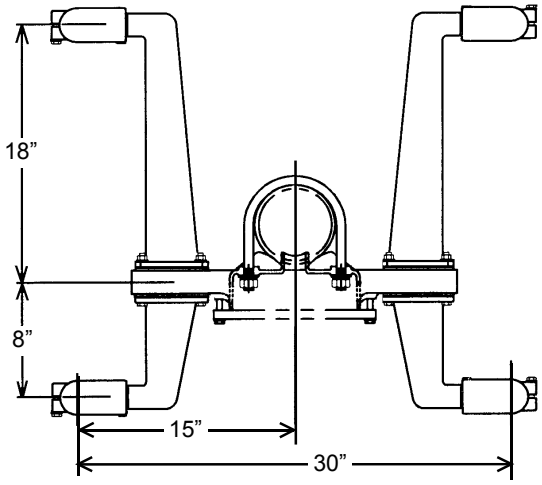

Figure “F”. XA-120 Junction Box Cross Arm Order No. N46712501 (for 1-Way Flashing Light Assemblies)

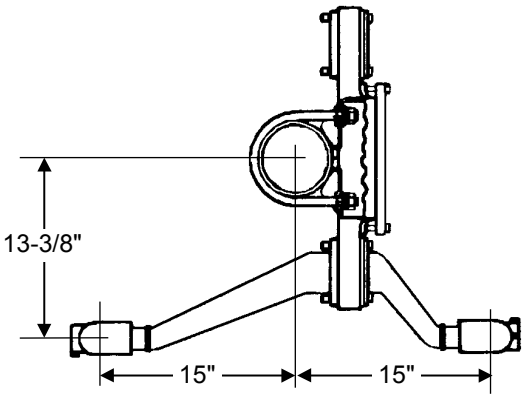

Figure “G”. XA-120 Junction Box Cross Arm Order No. N46712502 (for 2-Way Flashing Light Assemblies)

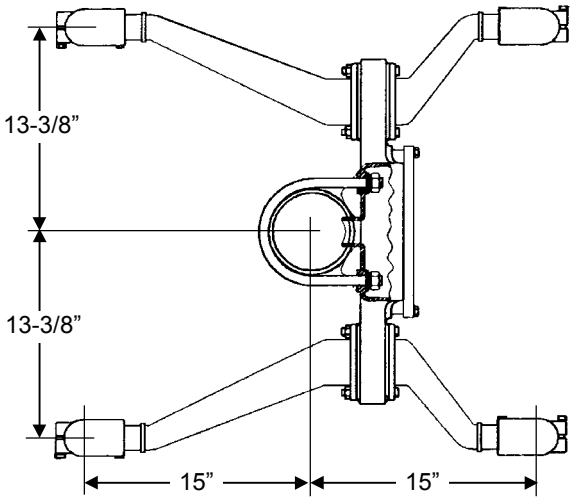

UNION SWITCH & SIGNAL

RSE-5C1
Rev. 7-03

Highway Crossing Masts

General Description

US&S provides highway crossing masts in 4” or 5” diameters and heights ranging from 6’ 9” up to 15’ 3”. These aluminum units are pre-drilled for quick mounting of Model 95 Gate Mechanisms, HC-120B Flashing Light assemblies, junction box bases and other major attachments. Both standard and converging flashing light applications are accommodated. One version of the mast (see ordering tab.) incorporates a welded stud to simplify electrical grounding of the complete highway crossing mast electrical system; this feature is especially useful for highway crossing installations in electrified rail territory.

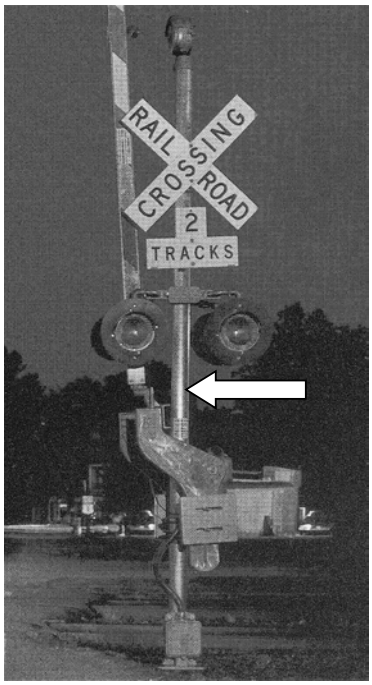

Ordering Information

- Refer to ordering tabulation for highway crossing mast part numbers.
- For mast part number M451394-5103, holes are custom-drilled. When ordering, please specify:
  - Mast order number M451394-5103
  - Required mast length and diameter
  - Angle and direction (CW or CCW from the 0 reference point) of the second cross arm hole (refer to diagram).
- Per diagram on reverse side, hole “A” 90 deg. and junction box base must be parallel to tracks, not parallel to road as is normally done with US&S assemblies.
- Contact your US&S Account Executive for mast designs not shown in ordering tabulation.

	Highway Crossing Masts							
US&S Order No.	Application	Diameter	Height	Hole "A" (1)	Hole "B" (2)	Hole "C" (3)	Welded Ground Stud	Notes
M4513943902	Standard	5"	13'-6"	0 deg.	0 deg.	--	--	--
M4513944001	Standard	5"	15'-3"	0 deg.	0 deg.	--	--	(4)
M4513944002	Converging	5"	15'-3"	0 deg.	0 deg.	30 deg.	--	--
M4513944201	Standard	5"	6'-9"	0 deg.	--	--	--	--
M4513945101	Standard	4"	13'-6"	0 deg.	0 deg.	--	--	--
M4513945103	Standard	4"	15'-3"	0 deg.	0 deg.	--	--	--
R46712802	Standard	5"	15'-3"	0 deg.	0 deg.	--	X	(5)
	Note (1): Hole "A": Junction box base Note (2): Hole "B": Junction box crossarm Note (3): Convergence Note (4): 2nd hole field-drilled Note (5): See ordering notes for additional information.							

UNION SWITCH & SIGNAL

Highway Crossing Masts

RSE-5C1
Rev. 7-03

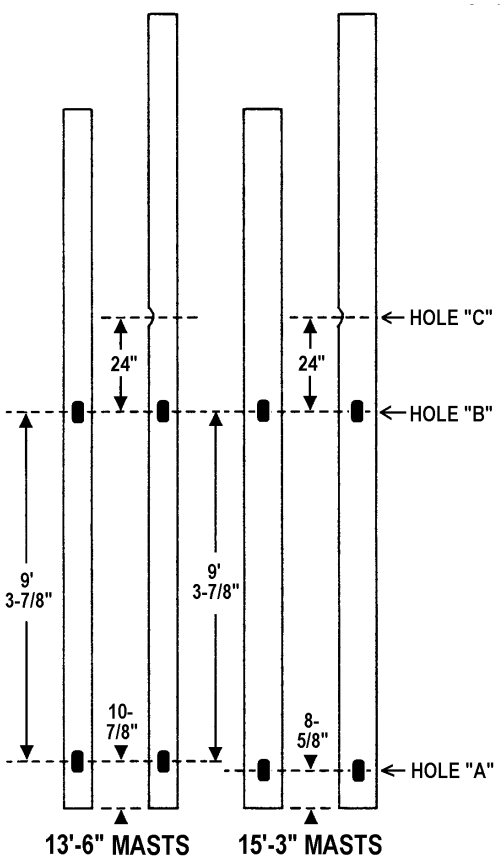

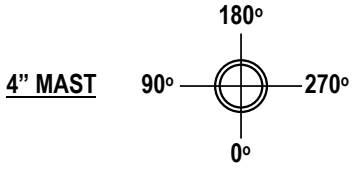

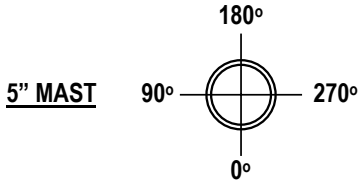

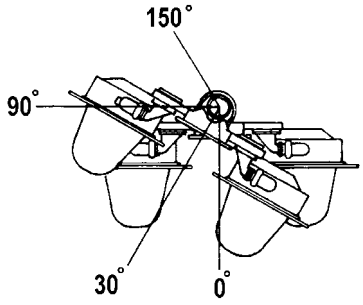

Per above, hole "A" 90 deg. and junction box base must be parallel to tracks, not parallel to road as is normally done with US&S assemblies.

UNION SWITCH & SIGNAL

RSE-5C2
Rev. 7-03

Highway Crossing Mast Mechanical Attachments

(Junction Box Bases, Pinnacles, Rodent Covers, Wind Guards)

General Description

US&S provides a full selection of industry-standard attachments to expedite the construction of the entire highway crossing mast assembly. Heavy duty split-based junction box bases are provided for 4” or 5” masts. These 2-piece units incorporate a bolt-on side plate to access an internal AREMA wiring terminal strip (12 terminals).

For the top of the mast, US&S provides 4” or 5” pinnacle when a bell is not installed.

A rodent cover is provided to protect wiring entering the mast inside the junction box base. This part is secured with mounting tabs inside the base.

US&S wind guard brackets keep the crossing gate arms from swaying excessively in high winds when in the up position. Two versions can be ordered, including a rigid model with tubular aluminum arms, and a flexible model with an adjustable arm holding depth.

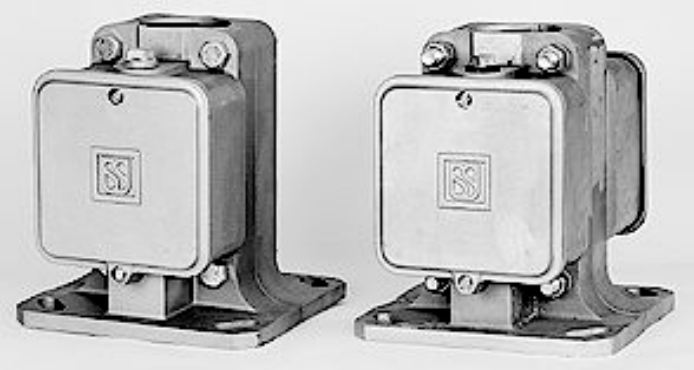

Ordering Information

- Refer to ordering tabulations for junction box bases, pinnacles, rodent covers and wind guards.
- For junction box bases, foundation nuts, bolts and washers required if the signal foundation poured on-site. Contact your US&S Account Executive for ordering information.
- Contact your US&S Sales Representative for any special designs or configurations required.

	Junction Box Bases	
US&S Order No.	Mast Diameter	Bolt Spacing
79685041	4"	9-1/2" x 9-1/2"
J7050490801	5"	11-11/16" x 11-11/16"

	Wind Guard
US&S Order No.	
J7051915820	Rigid Wind Bracket for Gate Arm

	Pinnacles and Rodent Covers	
US&S Order No.	Description	Mast Diameter
J026104	Pinnacle	4"
J026111	Pinnacle	5"
M4511953601	Rodent Cover	4"
M4511953602	Rodent Cover	5"

UNION SWITCH & SIGNAL

RSE-5C2
Rev. 7-03

Highway Crossing Mast Mechanical Attachments (Junction Box Bases, Pinnacles, Rodent Covers, Wind Guards)

4” Junction Box Base

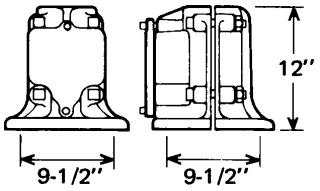

5” Junction Box Base

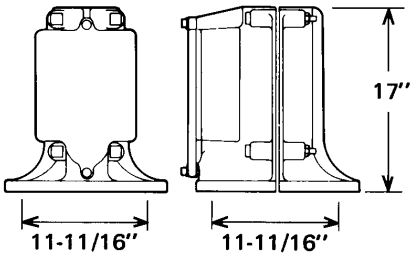

Gate Arm Rigid Wind Bracket

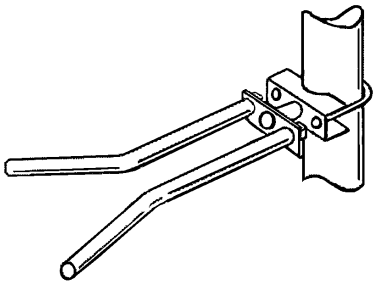

Pinnacle

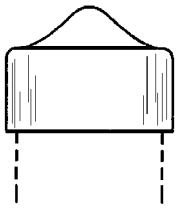

Rodent Cover

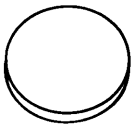

UNION SWITCH & SIGNAL

RSE-5C2
Rev. 7-03

Highway Crossing Mast Mechanical Attachments

(Junction Box Bases, Pinnacles, Rodent Covers, Wind Guards)

General Description

US&S provides a full selection of industry-standard attachments to expedite the construction of the entire highway crossing mast assembly. Heavy duty split-based junction box bases are provided for 4” or 5” masts. These 2-piece units incorporate a bolt-on side plate to access an internal AREMA wiring terminal strip (12 terminals).

For the top of the mast, US&S provides 4” or 5” pinnacle when a bell is not installed.

A rodent cover is provided to protect wiring entering the mast inside the junction box base. This part is secured with mounting tabs inside the base.

US&S wind guard brackets keep the crossing gate arms from swaying excessively in high winds when in the up position. Two versions can be ordered, including a rigid model with tubular aluminum arms, and a flexible model with an adjustable arm holding depth.

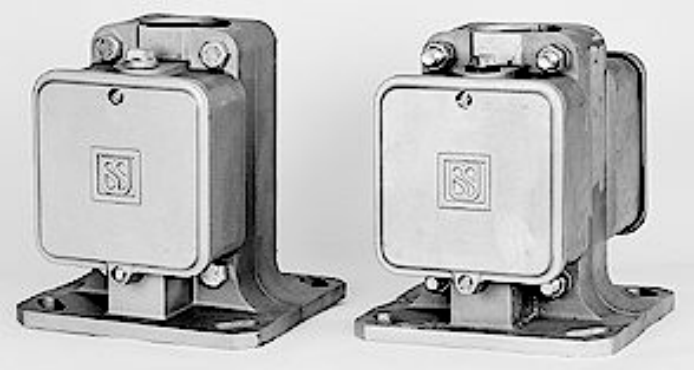

Ordering Information

- Refer to ordering tabulations for junction box bases, pinnacles, rodent covers and wind guards.
- For junction box bases, foundation nuts, bolts and washers required if the signal foundation poured on-site. Contact your US&S Account Executive for ordering information.
- Contact your US&S Sales Representative for any special designs or configurations required.

	Junction Box Bases	
US&S Order No.	Mast Diameter	Bolt Spacing
79685041	4"	9-1/2" x 9-1/2"
J7050490801	5"	11-11/16" x 11-11/16"

	Wind Guard
US&S Order No.	
J7051915820	Rigid Wind Bracket for Gate Arm

	Pinnacles and Rodent Covers	
US&S Order No.	Description	Mast Diameter
J026104	Pinnacle	4"
J026111	Pinnacle	5"
M4511953601	Rodent Cover	4"
M4511953602	Rodent Cover	5"

UNION SWITCH & SIGNAL

RSE-5C2
Rev. 7-03

Highway Crossing Mast Mechanical Attachments (Junction Box Bases, Pinnacles, Rodent Covers, Wind Guards)

4” Junction Box Base

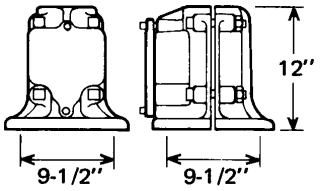

5” Junction Box Base

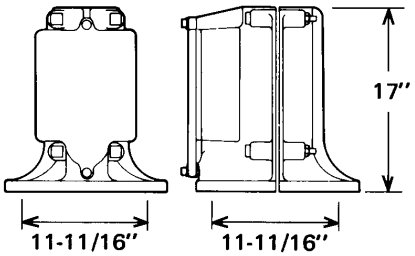

Gate Arm Rigid Wind Bracket

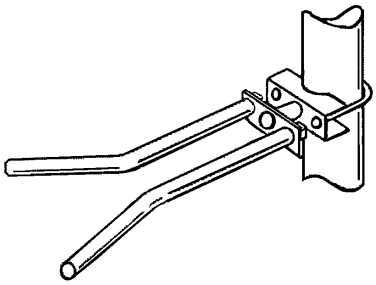

Pinnacle

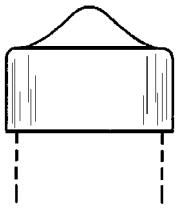

Rodent Cover

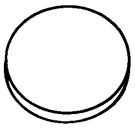

UNION SWITCH & SIGNAL

RSE-5C3
Rev. 7-03

Highway Crossing Bell

General Description

US&S Highway Crossing Bell provides added warning for pedestrians at highway crossings. Both electronic and electro-mechanical bell designs are available and incorporate a standard 12” gong as well as set screw (with jam nut) to secure the assembly to the top of the mast. It can be directly mounted on the mast without adapter hardware.

The electro-mechanical BA-10 Highway Crossing Bell consists of a 12 inch steel gong mounted on a round cast aluminum housing. The housing is equipped with a rain hood and hinged aluminum cover which can be secured with a padlock. Mounting on a 4” or 5” mast is accomplished with a set screw. These bells can be mounted on the 4” mast without need of an adapter collar. A 10 Vdc (±25%) source is required for operating power. When the bell is operated at 10 volts, the current draw is 0.3 amperes.



Ordering Information

- Refer to ordering tabulation for Highway Crossing Bell part numbers.

Electro-Mechanical Bell Installation Dimensions

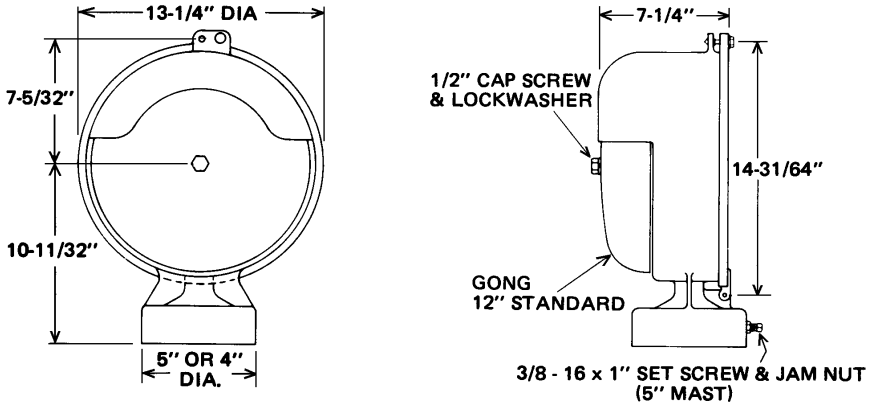

	Highway Crossing Bell	
US&S Order No.	Type	Mast
J705173	Electro-Mech	"4 or 5"
J705173001	Electronic	5"

UNION SWITCH & SIGNAL

UNION SWITCH & SIGNAL

RSE-5C4
Rev. 7-03

Highway Crossing Gate Arms

Complementing US&S' Model 95 Gate Mechanism is a cost-effective line of highway crossing gate arms. Arms are available in adjustable lengths from 12'-18' to 33'-40' with a choice of aluminum/fiber-glass or all-fiberglass construction.



General Description

Each gate arm has one fixed aluminum section and two aluminum or fiberglass telescoping sections. The gate arms are linked to the support assembly by a shear pin that allows breakaway to prevent damage to the mechanism in case the arm is struck.

Red/white diagonal striping draws attention to the arm when it is deployed, even in poor weather or at night. Striping is available in Engineering and High Intensity grades which meet all industry standards.

Arm visibility may be enhanced with weather-proof 4" or 7" dual-direction lights. Light unit wiring (coiled-cord or standard) can be fully plug-connected for easy replacement.

For arm attachment to the Model 95 Gate Mechanism, a Gate arm bracket is provided. This unit is designed with shear pins to prevent major damage if the arm is struck by a motor vehicle.

Advantages

- Mounts on existing equipment.
- Reduces inventory and installation problems.
- Tough aluminum or fiberglass arms stand straight, no warping – proven design.
- Telescoping arms, from 17 to 40 feet
- Standard or high-intensity red and white reflective striping
- No painting required.
- 4" and 7" 2-way lights with plug in wiring
- Three gate arm lights with adjustable deflection angles to meet varying field conditions
- Attaches to a break-away adapter to minimize vehicular damage

Specifications

Construction:	Aluminum/fiberglass or all-fiber
Lengths:	12' to 40'
Sheeting:	Engineering Grade or High Inte
Lights:	4" or 7", dual-direction
Cord Sets:	Coil cord or standard
Wiring:	Plug-connected or hard-wired

Ordering Information

- Refer to ordering tabulation on reverse side for gate arm and conversion bracket part numbers.
- Contact your US&S Account Executive to order special gate arm configurations and lengths exceeding 40 feet.

UNION SWITCH & SIGNAL

Highway Crossing Gate Arms

RSE-5C4
Rev. 7-03

Gate Arm with Light Units

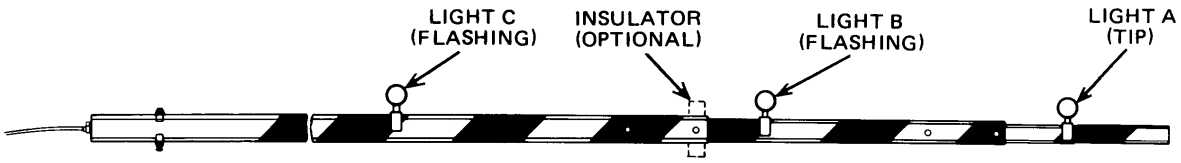

	Gate Arm Assemblies and Conversion Bracket				
US&S Order No.	Type	Length	Reflective Material Eng. Grade	Reflective Material Hi-Intensity	Lights
J7051918001	Alum./Fiberglas	12' - 18'	X	--	4"
J7051918002	Alum./Fiberglas	12' - 18'	--	X	4"
J7051918003	Alum./Fiberglas	12' - 18'	X	--	7"
J7051918004	Alum./Fiberglas	12' - 18'	--	X	7"
J7051918005	Alum./Fiberglas	19' - 32'	X	--	4"
J7051918006	Alum./Fiberglas	19' - 32'	--	X	4"
J7051918007	Alum./Fiberglas	19' - 32'	X	--	7"
J7051918008	Alum./Fiberglas	19' - 32'	--	X	7"
J7051918009	Alum./Fiberglas	33' - 40'	X	--	4"
J7051918010	Alum./Fiberglas	33' - 40'	--	X	4"
J7051918011	Alum./Fiberglas	33' - 40'	X	--	7"
J7051918012	Alum./Fiberglas	33' - 40'	--	X	7"
J7051918013	Fiberglas	12' - 18'	X	--	4"
J7051918014	Fiberglas	12' - 18'	--	X	4"
J7051918015	Fiberglas	12' - 18'	X	--	7"
J7051918016	Fiberglas	12' - 18'	--	X	7"
J7051918017	Fiberglas	19' - 28'	X	--	4"
J7051918018	Fiberglas	19' - 28'	--	X	4"
J7051918019	Fiberglas	19' - 28'	X	--	7"
J7051918020	Fiberglas	19' - 28'	--	X	7"
J7051915806	Gate Arm Conversion Bracket				

Highway Crossing Equipment

UNION SWITCH & SIGNAL

RSE-5C5
Rev. 7-03

Highway Crossing Gate Arm Counterweights

General Description

US&S provides a wide variety of counterweights for most crossing gate arms to ensure proper balance in all arm positions, and to minimize loads on the gate mechanism. Standard 36 lb. square-weight kits are available for the full range of arm lengths, from 12' to 15" arms up to 37' to 40' arms. New 47 lb. rectangular or "oblong" weight kits shift the weight further out on the arm, thus allowing the installation of a lower total weight package at the end of the arm. Either of these kits consists of a sufficient number of weights to balance the respective arm. Also available from US&S are extension arms for the weights to help the balance adjustment, and a stud plate kit for attaching the weights to the gate arm.



Ordering Information

- Refer to ordering tabulation for standard and "oblong" weight kit part numbers.
- Contact your US&S Account Executive to order special weight configurations not shown in the tabulation.

Standard Counterweight

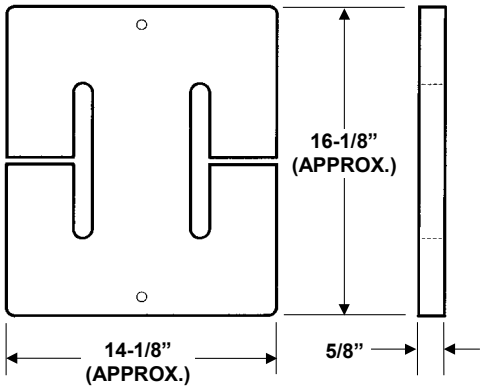

Oblong Counterweight

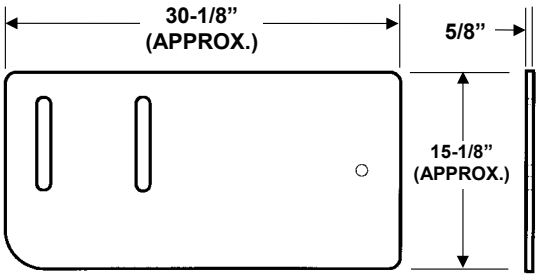

	Standard Weight Kits
US&S Order No.	
X46740151	12' - 15' Gate Arm
X46740152	16' - 18' Gate Arm
X46740153	19' - 21' Gate Arm
X46740154	22' - 23' Gate Arm
X46740155	24' - 26' Gate Arm
X46740156	27' - 29' Gate Arm
X46740157	30' - 32' Gate Arm
X46740158	33' - 36' Gate Arm
X46740159	37' - 40' Gate Arm

	Oblong Weight Kits
US&S Order No.	
X46740163	12 - 18' Gate Arm
X46740165	19 - 23' Gate Arm
X46740166	24 - 29' Gate Arm
X46740167	30 - 32' Gate Arm
X46740169	33 - 40' Gate Arm

	Misc. Components
US&S Order No.	
M4514843116	Counterweight, Square (36 lb.)
M46712301	Counterweight, Oblong (47 lb)
N4514842403	Counterweight Extension Arm
X46700001	Stud Plate for counterweight mounting

UNION SWITCH & SIGNAL

UNION SWITCH & SIGNAL

RSE-5C6
Rev. 7-03

Highway Crossing Signs

General Description

US&S highway crossing signs supplement safety at crossing locations by giving motorists specific information about the that location. “STOP ON RED”, “RR CROSSING”, “2 TRACKS” and “3 TRACKS” signs meet all applicable industry standards and are available with Engineering Grade or High Intensity material for assured visibility in all ambient or illuminated lighting conditions. All types of signs are available for mounting on 4” or 5” masts. One version of the “STOP ON RED” sign incorporates a stand-off bracket.



Ordering Information

- Refer to ordering tabulation for signs and mounting hardware part numbers.
- Contact your US&S Account Executive to order special signs and hardware not shown in the tabulation.

	Highway Crossing Signs				
US&S Order No.	Message	Reflective Material Eng. Grade	Reflective Material Hi-Intensity	Mast	Notes
X392930001	"STOP ON RED"	X	--	4"	--
X392930002	"STOP ON RED"	X	--	5"	--
X392930005	"STOP ON RED"	--	X	4"	--
X438077	"STOP ON RED"	X	--	4/5"	(1)
X438007-001	"STOP ON RED"	--	X	4/5"	(1)
X392931001	"RR CROSSING"	X	--	4"	--
X392931002	"RR CROSSING"	X	--	5"	--
X392931007	"RR CROSSING"	--	X	4"	--
X392931008	"RR CROSSING"	--	X	5"	--
X438002-002	"RR CROSSING"	X		4/5"	(1)
X438002-003	"RR CROSSING"		X	4/5"	(1)
J791615	"2 TRACKS"	X	--	--	(2)
J7916150001	"3 TRACKS"	X	--	--	(2)
J7916150007	"2 TRACKS"	--	X	--	(2)
J7916150008	"3 TRACKS"	--	X	--	(2)
	Note (1): Includes stand-off mast mount. Note (2): Mounting hardware must be ordered separately. See ordering tab. below.				

	Mounting Hardware for "TRACKS" Signs
US&S Order No.	
J0702051327	Mounting Bracket (w/extension) for 5" masts
J0702051428	Mounting Bracket for 5" masts
J0702051429	Mounting Bracket for 4" masts

UNION SWITCH & SIGNAL

Highway Crossing Signs

RSE-5C6
Rev. 7-03



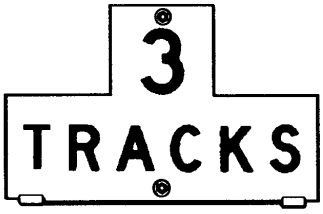



UNION SWITCH & SIGNAL

RSE-5D1
Rev. 7-03

Highway Crossing Cantilevers

US&S offers a full line of patented-design aluminum cantilevers for use in a variety of applications. These cantilevers are available in lengths from 12 feet to 40 feet. US&S' design offers superior strength and stability with minimum weight, enabling the structures to withstand hurricane winds. The end of the arm will support a 500-pound load with minimum deflection.



General Description

US&S cantilevers are fabricated of 6061- T6 aluminum alloy, while all bolts and fastening hardware are stainless steel. The result is a strong, lightweight unit that is easy to install in the field and is able to withstand winds of up to 100 mph, and gusts to 130 mph. Available lengths from 12 to 40 feet increase on 2-foot increments. A single-mast will support cantilevers up to 26 feet. A double-mast is required for cantilevers from 26 to 40 feet. All masts mount on a 4-bolt foundation.

On the cantilever, a ladder and walkway permit easy access to signals, and the crossarm junction box faces the walkway for convenient maintenance access.. The walkway is 18 inches wide; a 3-foot high handrail and a non-skid surface provide the desired safety features for maintenance personnel. Also, the walkway is perforated to allow rain and snow to fall through readily, reducing ice accumulation during inclement weather. The access ladder to the walkway incorporates an anti-climb guard to restrict unauthorized access.

Sign brackets are welded to the cantilever structure. The structure arm and mast are prefabricated in the factory, which eliminates tedious assembly in the field. The structure arm-to-mast connection also is designed for ease of installation in the field.

US&S cantilevers meet or exceed AREMA specifications for deflection and AASHO specifications for allowable stresses.

Advantages

- Welded aluminum construction
- Single and double mast designs
- 12- to 40-foot lengths
- Light weight 6061- T8 alloy provides strength
- Supports a 500 lb. load at arm's end
- Withstands sustained winds up to 100 mph, gusts to 130 mph.
- Easy access via 18-inch wide walkway with 3-foot handrails
- Walkway perforated to reduce ice accumulation
- Ladder and walkway conveniently placed for flashing signal maintenance
- Ladder with anti-climb guard
- Meets AAR and AASHO standards

Ordering Information

- US&S highway crossing cantilevers ordered per customer requirements; no standard part numbers. Contact your Account Executive for information.

UNION SWITCH & SIGNAL

UNION SWITCH & SIGNAL

RSE-5E1
Rev. 7-03

HX-1 Highway Crossing Power Pack

General Description

The HX-I Power Pack provides power for up to four AC-DC (style “C”) track circuits, which are typically used in non-signaled and industrial railroads. The unit is particularly useful at installations with poor rail shuntings. A typical application is illustrated below.

The HX-I package consists of a solid state DC to AC inverter, and output transformer with four secondaries and a power transfer relay. Under normal conditions, the unit is fed by 110V/60 Hz power. This voltage is stepped down to 6.3 volts at each of the four secondaries. In the event that AC power fails, the incorporated power transfer relay de-energizes automatically, allowing the unit to operate with a 10-12 Vdc power source. The incorporated solid state inverter converts the DC energy to AC, which operates the unit. No adjustments are necessary.

Components of the HX-I are contained and connected in a single unit. AREMA terminals are provided for all external connections.



Specifications

Input Voltage:	110 Vac and 10-12 Vdc, 110 VA rating
Secondaries:	6.3 V, 3.5 A, 100 VA rating
Inverter Output:	110 Vac
Unit Weight:	19 lbs.

Ordering Information

- Refer to ordering tabulation for complete unit part numbers and key replacement parts.

	HX-1 Unit and Key Components
US&S Order No.	
98605009	HX-1 Highway Crossing Power Pack
98805077	ST-3 Rectifier
25530429	Inverter-Transformer
87015378	Power Transfer Relay
3425001	Power Transistor

Typical Circuit Application

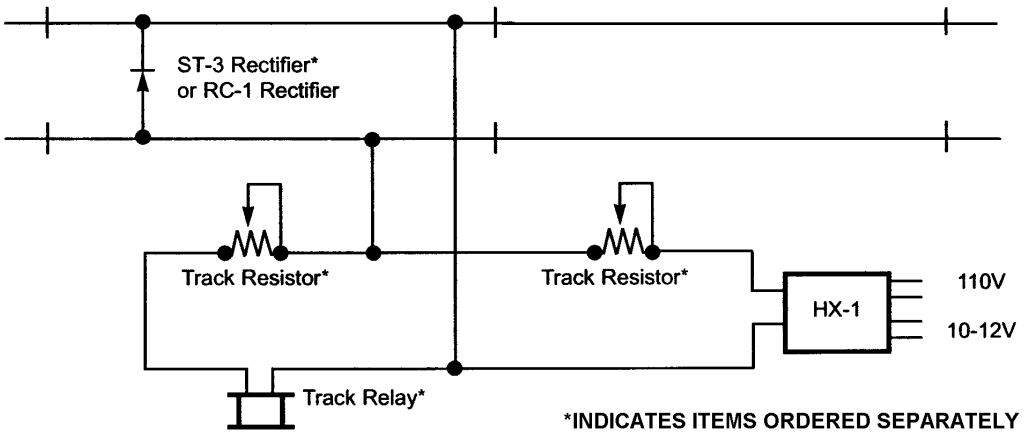

*INDICATES ITEMS ORDERED SEPARATELY

UNION SWITCH & SIGNAL

HX-1 Highway Crossing Power Pack

RSE-5E1
Rev. 7-03

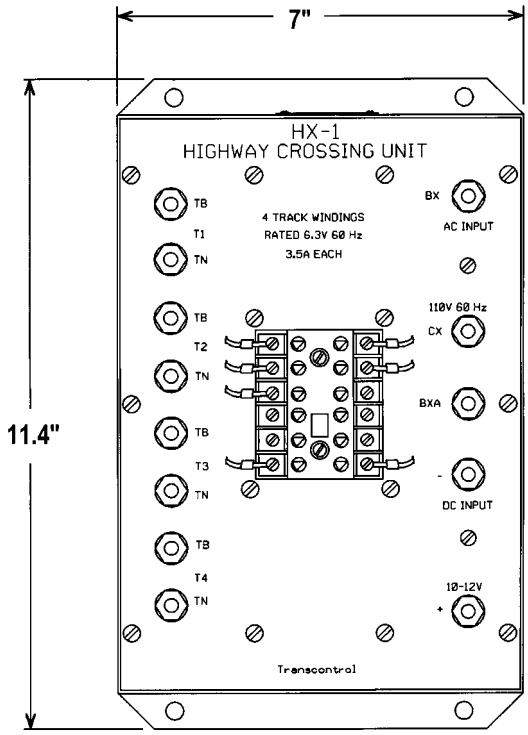

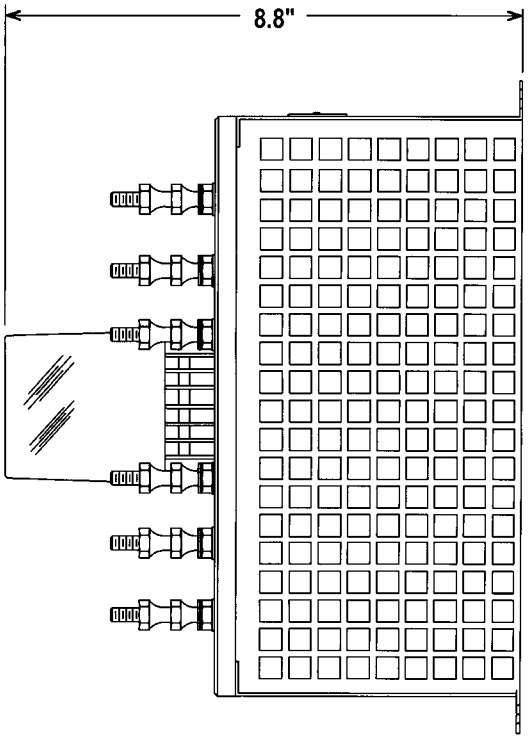



Switch Machines and Associated Equipment

Style "M" Electric Machines and Associated Equipment

- M-3E and M-23E with Electronic Circuit Controller (ECC)
- Standard M-3 and M-23A/B – With Mechanical Circuit Controllers and ECC Controllers
- Support and Upgrade Equipment for Style "M" Switch Machines
- Electronic Circuit Controller (ECC) Field Test Unit

Misc. Switch Machines

- A10 Electro-Pneumatic Switch Machine
- YM 2000 Yard Electric Switch Machine
- DA-10 Yard Electro-Pneumatic Switch Machine
- T-20 and T-21 Hand-Operated Switch Machines

Circuit Controllers and Switch Locks

- U-5 Circuit Controller
- SL-21A Switch Lock
- SL-6A Switch Lock
- SL-25 Switch Lock

Misc. Layout Parts, Assemblies and Tools

- Circuit Controller Operating Rods and Point Detector Lugs for Switch Circuit Controllers
- Switch Lock Lever Lock Rods
- Switch Point Roller Bearing Assemblies
- Swivel Front Rods and Swivel Point Lugs
- Switch Machine and Switch Layout Tools
- Pedestal-Mounted Junction Boxes

UNION SWITCH & SIGNAL

RSE-6A1
Rev. 7-03

M-3E and M-23E Electric Switch Machines
(With Integral Electronic Circuit Controller)

Union Switch & Signal's new M-3E and M-23E™ Electric Switch Machines achieve a new level of efficiency in switch-machine operation. Featuring the revolutionary US&S ECC™ Electronic Circuit Controller, the patented M-3E and M-23E are designed with input from US&S customers to dramatically reduce the installation, maintenance and adjustment time and activities traditionally associated with switch machines. An optional predictive-maintenance feature also helps eliminate the operational headaches that result from switch-machine failures.



General Description

The M-3E and M-23E are the next generation "M-style" switch machines from US&S. They utilize the basic US&S M-style machine drive-train designs, which have been proven to provide years of reliable service. The M-3E and M-23E are equipped with a solid-state Electronic Circuit Controller and incorporate simple, modular construction that requires a low degree of maintenance. All serviceable parts of the M-3E and M-23E can be maintained with one tool (a ratchet with a 3/4" socket and 10" extension). The M-3E and M-23E features many other design improvements over its predecessors, including a significantly lower vertical profile, integrated latch-stand assemblies, local/remote control capability, self-lubricating bearings, and inter-changeability with other switch machines. They are available in both "full lock" and "restrictive lock" manual-operation modes, and both versions are equipped with a hand-crank feature (M-3E available with hand crank only, no hand throw). The M-3E and M-23E are available with either a 24/36 Vdc or 110 Vdc permanent magnet motor, with increased horsepower capability for optimum performance.

The key component of the M-3E and M-23E is their new Electronic Circuit Controller, a microprocessor-based unit that can be used as a "drop-in" replacement for the mechanical circuit controller in all US&S M-style switch machines. A true linear detection device with no moving mechanical parts to maintain, the ECC eliminates circuit-controller sensitivity degradation due to component wear.

The ECC utilizes inductive proximity sensors to continuously monitor switch-machine conditions. It vitally monitors the position of the switch points and the internal locking mechanism, delivering switch-machine indications to the wayside.

The ECC's advanced diagnostics system analyzes both local machine status and adjacent switch-machine indication circuitry. The unit also can be equipped with an optional auxiliary switch-point detection system that monitors switch-point position to a tighter tolerance, reporting marginal switch-machine performance to the wayside and predicting failures before they occur.

ECC Unit



UNION SWITCH & SIGNAL

RSE-6A1
Rev. 7-03

M-3E and M-23E Electric Switch Machines
(With Integral Electronic Circuit Controller)

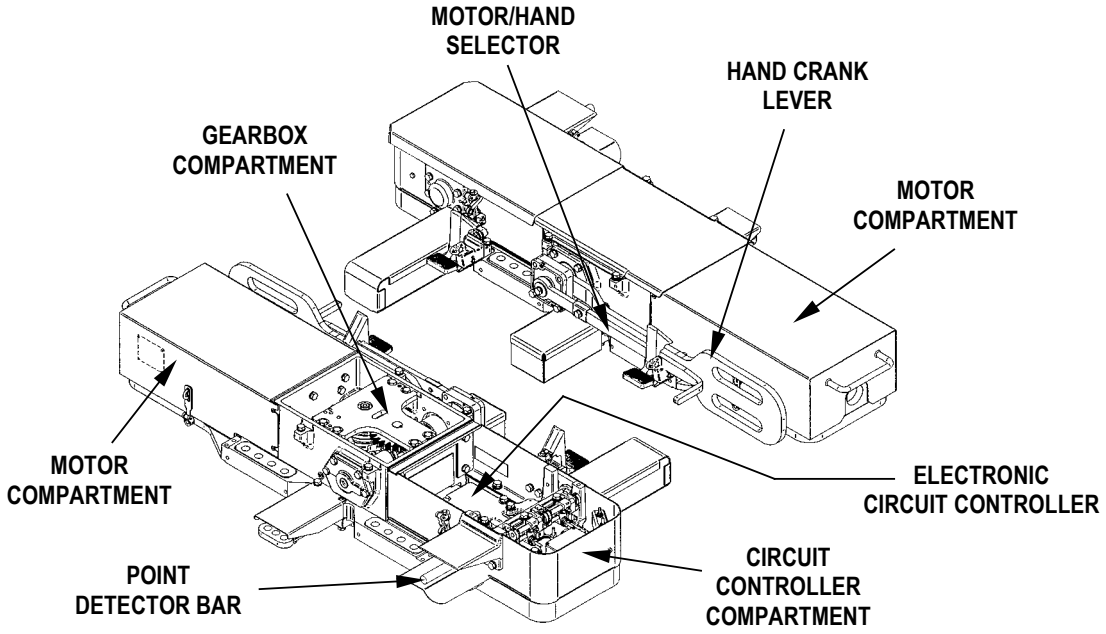

Advantages

- Meets or exceeds all applicable AREMA standards.
- Modular, low-profile mechanical design based on original, history-proven M-3/M-23 drive train.
- Reduced size and low profile facilitate flexible installation options, without requiring tie-cutting.
- Dual control that provides both a hand-throw lever and hand crank for manual operation (M-23E only).
- Available in both “A” (full lock) and “8” (restrictive lock) manual-operation modes.
- Integrated latch stands (M-23E only0.
- Ergonomically designed hand-throw lever.
- Lower profile than equivalent all-mechanical “M” series machines.
- Field conversion from right-hand to left-hand layout (and vice versa) in less than 30 minutes.
- Only one tool required for all maintenance and repair.
- No mechanical moving circuit-controller parts to deteriorate or maintain.
- No mechanical contacts or sealed switches.
- ECC can detect all possible states of proximity sensors: on, off, shorted or open.
- Simple set-up and adjustment of point-detection system reduces adjustment time by more than 60 percent.
- Advanced LED diagnostics provide information on state of local and adjacent switch machines.
- LED diagnostics lead maintenance personnel directly to problem without use of a multimeter or similar device.
- Available with optional auxiliary point-detection system that reports marginal switch-machine operation in advance of failure.
- Predictive-maintenance feature can reduce operational costs associated with train delays resulting from switch machine malfunctions.
- Local/remote switch control. capability.
- Electronic latch-out feature that can be restored manually or automatically and cannot be restored in “manual” operation mode by moving hand-throw lever.
- 24/3 Vdc and 110 Vdc motor-control options capable of producing up to 50 percent more output thrust.

M-3E and M-23E Electric Switch Machines
(With Integral Electronic Circuit Controller)

UNION SWITCH & SIGNAL

RSE-6A1
Rev. 7-03

Application

The M-3E and M-23E can be configured for installation in existing US&S M-style switch-machine locations, as well as applications where other manufacturers' machines have been used. Their low profile minimizes the need to dap (cut) switch ties. The M-3E and M-23E easily can be configured to operate on 2-, 3- and 5-wire control systems. Mounting-lug insert plates make the machine adaptable to US&S and Alstom (GRS) switch-machine footprints.

The ECC operates on continuous battery power ranging from 10 to 16 Vdc. Up to three machines can be series-connected for indication-circuit operation. Switch indication circuits can be configured for either 2-wire bi-polar or 4-wire applications.Advanced LED diagnostics provide information on the state of each vital sensor and indicate the presence of switch-indication power from an adjacent machine. LED diagnostics also are provided for indication output from the machine, motor-power availability and the latch-out feature.

The optional auxiliary point-detection system generates an output that can provide advance notice to warn maintenance personnel of marginal switch-machine operation. The sensing threshold of each auxiliary sensor is offset from the vital point detector sensors by 1/8" to detect switch-point displacement before the vital sensors indicate point-detector bar movement. With the auxiliary system, switch-point displacement caused by debris build-up or expansion and contraction of the rail can be detected before a switch failure occurs.

Specifications

Dimensions:	M-23E: 9-5/8"H x 33"W* x 65"D M-3E: 9-5/8"H x 33"W* x 65"D *With snow covers
Weight:	M-23E: 920 lbs. M-3E: (Contact US&S)
Mounting Footprint:	Configurable to mount in most mainline switch-machine applications.
Application:	Field-configurable for right-hand and left-hand applications.
Motor Options:	24/36 Vdc and 110 Vdc operation, 2-wire control.
Gear-Ratio Options:	M-23E: 189:1, 360:1 and 528:1 M-3E: (Contact US&S)
Latch-Out Options:	Manual restoration, automatic restoration and disable.
Op. Temp. Range:	-40°C to +70°C
ECC Input Voltage:	10 to 16 Vdc.
Indica. Output Voltage:	12 Vdc nominal.
Bi-Polar Aux. Output:	12 Vdc nominal.
I/O Connections:	Wago terminals mounted on DIN rail; AREMA binding posts for motor-power terminations.

Ordering Information

- Refer to ordering tabulation for M-23E Electric Switch Machine part numbers.
- Check the "Configuration Guide" below for machine design options.
- To order the M-3E Electric Switch Machine, contact your US&S Sales Representative.
- Refer to ***RSE-6A4*** for M-3E and M-23E ECC Portable Test Unit ordering information.
- Refer to ***RSE-6J1*** for tools to service the mechanical portion of the M-3E and M-23E machines.
- Contact your US&S Account Executive for M-3E and M-23E replacement parts.

Configuration Guide

A	(Ref. not used in this catalog edition)
B	Includes 15W/115V motor heater
C	(Ref. not used in this catalog edition)
D	(Ref. not used in this catalog edition)
E	Includes local/remote control feature
F	Includes auxiliary point detector feature
G	(Ref. not used in this catalog edition)
H	Mounting lug insert plates for 7/8" fasteners
I	(Ref. not used in this catalog edition)
J	Includes 15W-115/230V motor heaters
K	Aluminum paint
L	Black paint

UNION SWITCH & SIGNAL

M-3E and M-23E Electric Switch Machines
(With Integral Electronic Circuit Controller)

RSE-6A1
Rev. 7-03

	M-23E "A" Style Machines (1)							
US&S Order No.	Layout	110V 189:1 (2)	110V 360:1 (2)	36-20V 360:1 (2)	36-20V 528:1 (2)	Point Det. Bar	Aux. Point Det. Pox. Sensors	Options (3)
N42255101	Left-Hand	X	--	--	--	Threaded	X	B, H
N42255102	Right-Hand	X	--	--	--	Threaded	X	B, H
N42255107	Left-Hand	--	--	--	X	Threaded	--	H, J, K
N42255108	Right-Hand	--	--	--	X	Threaded	--	H, J, K
N42255113	Left-Hand	--	--	X	--	Clevis	X	E, H, L
N42255114	Right-Hand	--	--	X	--	Clevis	X	E, H, L
N42255115	Left-Hand	--	--	--	X	Threaded	X	E, F, H, L
N42255116	Right-Hand	--	--	--	X	Threaded	X	E, F, H, L
N42255117	Left-Hand	--	--	--	X	Threaded	--	H, L
N42255118	Right-Hand	--	--	--	X	Threaded	--	H, L
N42255119	Left-Hand	X	--	--	--	Threaded	X	B, E, F, H, K
N42255120	Right-Hand	X	--	--	--	Threaded	X	B, E, F, H, K
N42255121	Left-Hand	--	--	--	X	Threaded	X	E, F, H, J, K
N42255122	Right-Hand	--	--	--	X	Threaded	X	E, F, H, J, K
	Note (1): Hand-throw lever gives same mech. stroke and full lock-rod protection as power-operated mode (see Note (1) of "B" Style tab. below. Note (2): Motor/gear ratio combination. Note (3): Refer to configuration guide for options.							

	M-23E "B" Style Machines (1)							
US&S Order No.	Layout	110V 189:1 (2)	110V 360:1 (2)	36-20V 360:1 (2)	36-20V 528:1 (2)	Point Det. Bar	Aux. Point Det. Pox. Sensors	Options (3)
N42255207	Left-Hand	--	--	--	X	Threaded	--	H, J, K
N42255208	Right-Hand	--	--	--	X	Threaded	--	H, J, K
N42255209	Left-Hand	X	--	--	--	Clevis	X	B, E, F, H
N42255210	Right-Hand	X	--	--	--	Clevis	X	B, E, F, H
N42255217	Left-Hand	--	--	--	X	Threaded	X	E, F, H, J, K
N42255218	Right-Hand	--	--	--	X	Threaded	X	E, F, H, J, K
	Note (1): Hand-throw lever does not provide lock rod protection; slide bar and lock box do not move full stroke. Note (2): Motor/gear ratio combination. Note (3): Refer to configuration guide for options.							

Switch Machines and Associated Equipment

UNION SWITCH & SIGNAL

RSE-6A2
Rev. 7-03

M-3, Low-Profile M-3, M-23A and M-23B
Electric Switch Machines (Including ECC Retrofits)

US&S' style "M" Electric Switch Machines are rugged, reliable, units designed for any installation where electric power is available. The M-23A and M-23B units have dual control features, including a hand-throw lever to permit operation by on-site trainmen or maintainers, as well as by remote controlled power. The M-3 Switch Machines are recommended for applications where there is seldom a need to manually operate the switch. These three machines are available with a wide variety of operating speeds and motor voltages. In addition, they can noe ber furnished with standard electro-mechanical circuit controllers or US&S' new Electronic Circuit Controller (ECC).

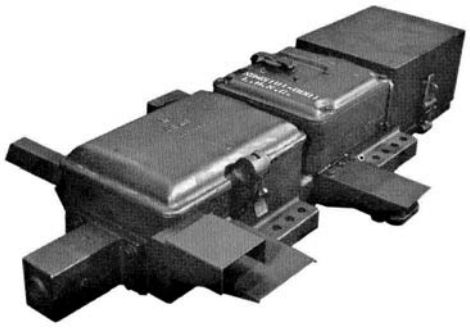

General Description

Basic Design

Style "M" Electric Switch Machines consist of a motor, a gear train, a cam arrangement (for operating the switch and locking) and a circuit controller with a point detector (with latch device). A latchout retrofit kit is available for the point detector mechanism (see ***RSE-6A3***). Components in this kit enable the circuit controller indication contacts to be held open (until reset) when the point detector bar is displaced while the machine is in locked-up condition (i.e. switch points obstruction).

All "M" style machines use the same basic casting, and are interchangeable with respect to mounting and connections in a switch layout. However, the M-23A and M-23B machines require a somewhat higher clearance than the standard and Low Profile M-3's. Both models of the M-3 Switch Machine can be operated by hand by inserting a temporary crank.

For installations where extra vertical clearance is needed, the Low Profile M-3 Electric Switch Machine is recommended. This machine is similar to the standard M-3 in design and operation, but is 5/8 inch lower in vertical dimension. This small but important height reduction makes the Low Profile M-3 ideal for third-rail transit applications where additional clearance is needed for the vehicle pick-up shoe. The point detector bar can be vertically lifted from the machine, allowing easy handling in tight confines. Left and right-hand versions of this machine are available, each with a single operating voltage, gear ratio and wire control scheme.

The M-23A uses a different hand-throw pinion than the M-23B, which affects hand-throw locking. Power operation is the same with both machines. In the M-23A, the hand throw lever gives the same mechanism stroke and full lock rod protection as the power operated mode. In the M-23B, however, the lever does not provide lock-rod protection (slide bar and lock box do not move full stroke).

All "M" style machines are wired at the factory, with internal wiring connected to a main terminal board in the motor compartment. A typical wiring diagram or working drawing is enclosed with each shipped machine to show how external connections should be made to the main terminal board for a particular application.

Circuit Controller

Mechanical - The Circuit Controller used in the style "M" switch machines has four pairs of contacts. Two motor control contacts are wired internally. The remaining are indication contacts for external switch position determination. To allow standardized wiring, provision is made to always have certain contacts set as normal, regardless of which end of the operating stroke is designated as normal.

Electronic – US&S produces models of its M-23A and M-23B switch machines with the new Electronic Circuit Controller (ECC) installed in new machine at the factory. A true linear detection device with no moving mechanical parts to maintain, the ECC eliminates circuit-controller sensitivity degradation due to component wear. The ECC utilizes inductive proximity sensors to continuously monitor switch-machine conditions. It vitally monitors the position of the switch points and the internal locking mechanism, delivering switch-machine indications to the wayside. For more information on this device, refer to RSE-6A1. US&S can also retrofit the ECC unit into existing machines returned to the factory for refurbishment; refer to the RSE catalog introduction for more information on this service, or contact your US&S Account Executive.

UNION SWITCH & SIGNAL

M-3, Low-Profile M-3, M-23A and M-23B Electric Switch Machines

RSE-6A2
Rev. 7-03

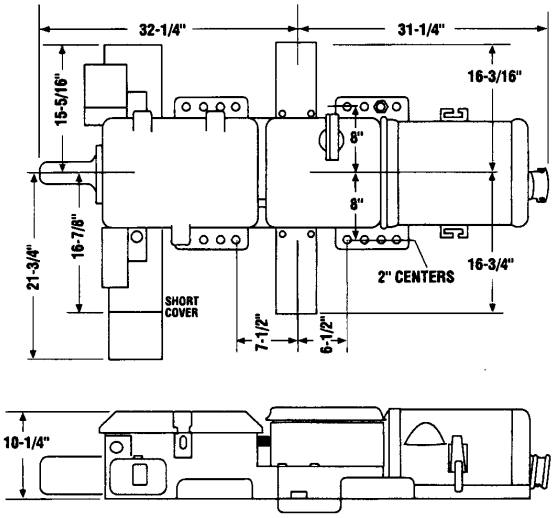

STANDARD M-3 ELECTRIC SWITCH MACHINE DIMENSIONS

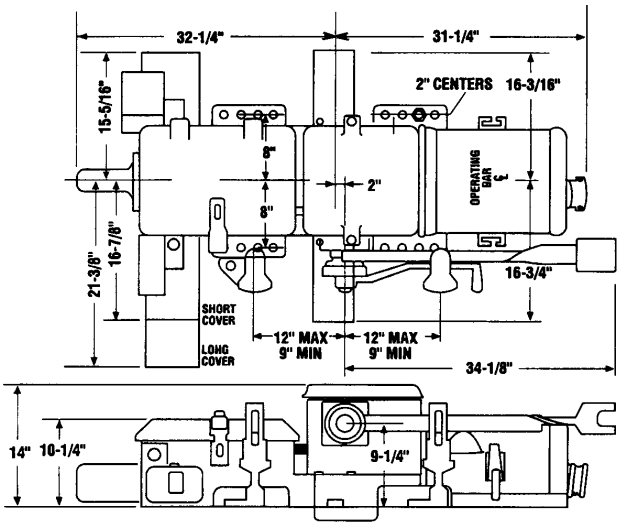

M-23A, AND M-23B ELECTRIC SWITCH MACHINE DIMENSIONS

LOW PROFILE M-3 ELECTRIC SWITCH MACHINE DIMENSIONS

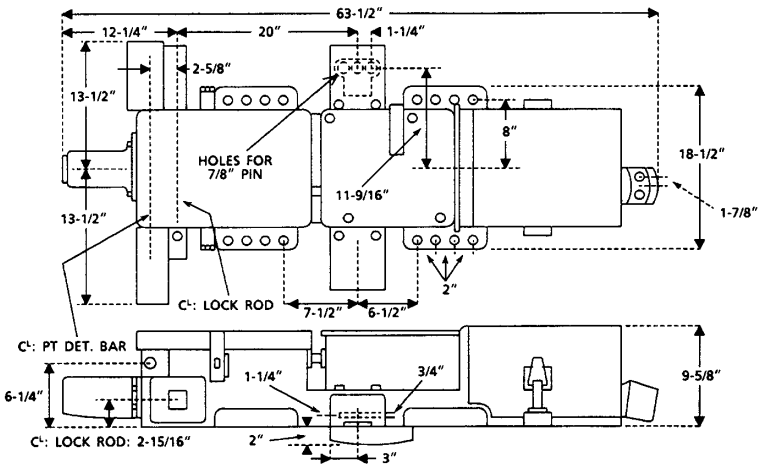

Motor and Gear Train

US&S "M" Electric Switch Machines use a fully enclosed, permanent magnet motor. This type of motor provides lower inductance, better EMI immunity and higher efficiency than previous wound field motors, and incorporates simpler 3-wire control. (Permanent magnet motors are also available for retrofitting older models of these switch machines; see ***RSE-6A3***.)

The gear train in the "M" style Switch Machines is comprised of a pinion on the end of the motor shaft, one or two reduction gears, clutch gear, friction clutch, worm shaft and worm gear. Three different gear ratios are used to provide three operating speeds. The Low Profile M-3 incorporates the same basic gear train concept as the other style "M" machines, and is provided with a single gear ratio of 189:1. In all style "M" machines, a friction clutch protects the mechanism from the shock incurred at the end of a stroke, or when an obstruction is present. For complete motor and gear train specs, refer to the ordering tabs.

Advantages

- Rugged design, superb service record
- Remote or on-site control
- Available with retrofitted ECC
- Wide selection of operating speeds and voltages
- Right or left-hand layout
- Meets all AREMA standards
- Low-profile M-3 for tight clearances

M-3, Low-Profile M-3, M-23A and M-23B Electric Switch Machines

UNION SWITCH & SIGNAL

RSE-6A2
Rev. 7-03

Specifications

Weight:	Std. M-3, Low Profile M-3: 810 lbs. M-23A, M-23B: 860 lbs.
Motor Type:	Various perm. magnet and field wound
Motor Voltage:	Std. M-3, M-23A, M-23B: See tabs. Low Profile M-3: 110 Vdc
Motor RPM:	Standard M-3, M-23A, M-23B: - 500 RPM for 528:1 geared machines - 1450 RM for 189:1 geared machines, - 650 RM for 360:1 geared machines Low-Profile M-3: 1430 RPM
Operating Time*:	Standard M-3: See ordering tabulation Low Profile M-3: 4.5 seconds M-23A, M-23B: See ordering tabs.
Clutch Setting:	Standard M-3: 14A for 189:1 mach. 12A for 528:1 geared machines Low Profile M-3: 13A M-23A, M-23B: - 14A for 189:1 geared machines - 23A for 360:1 geared machines, - 12A for 528:1 geared machines

*Per AAR dwg. 1457; condition-dependent.

Ordering Information

- To order a standard M-3, M-23A or M-23B switch machine, or machines retrofitted with the Electronic Circuit Controller (ECC);
  - Refer to "Configuration Guide". Guide gives all available design and operating options, each denotes with a letter.
  - Go to ordering tabulations and select machine with desired options.
  - Also select machine according to desired motor voltage, operating speed and gear ratio.
- To order a Low Profile M-3 switch machine, refer to the separate tabulation for that machine.
- To order new US&S "M" equivalent switch machines with Electronic Circuit Controller (ECC), refer to ***RSE-6A1***.
- Refer to ***RSE-6A3*** for the following support equipment:
  - Permanent magnet retrofit motor kits for old style M-3, M-23A and M-23B machines.
  - Retrofit latchout retrofit kit.
  - Latch stand.
  - Point detector bars
  - Lock rods and lock connecting rods

Ordering Information

- Refer to ***RSE-6J1*** for tools used to maintain style "M" machines.
- If ordering style "M" machines for a new switch layout, please supply all required specifications, and mounting dimensions according to approved track plans (contact your US&S Account Exec. for any assistance needed).
- Request the following US&S Service Manuals for replacement parts:
  - SM-6263 for standard M-3, M-23A and M-23B
  - SM-6444 for Low Profile M-3

Ordering Guide for M-Series Switch Machines with Mechanical Circuit Controller

A.	One 15W heater in circuit controller.
B.	Two 15W 115V heaters: One controller, one in motor.
C.	Machined mounting lugs.
D.	(Ref. not used in this catalog edition)
E.	Clutch set to 14 amps.
F.	Terminal board in junction box.
G.	Circuit controller without point detector latch.
H.	(Ref. not used in this catalog edition)
I.	(Ref. not used in this catalog edition)
J.	Two 15W, 24V heaters: One in controller, one in motor.
K.	Flag type terminals.
L.	(Ref. not used in this catalog edition)
M.	(Ref. not used in this catalog edition)
N.	5-wire control.
O.	3-wire control.
P.	Telephone jack in circuit controller compartment.
Q.	Thermostat in motor compartment.
R.	(Ref. not used in this catalog edition)
S.	Lock rod openings closed

Ordering Guide for M-Series Switch Machines with Electronic Circuit Controller (ECC)

M-23B with ECC

A.	(Ref. not used in this catalog edition)
B.	15W/110V motor heater
C.	Lock rod opening closed
D.	(Ref. not used in this catalog edition)
E.	Equipped with local/remote control feature
F.	Equipped with auxiliary point detector feature
G.	15W, 115/230V motor heater (wired for 115V)
H.	Aluminum paint

UNION SWITCH & SIGNAL

RSE-6A2
Rev. 7-03

M-3, Low-Profile M-3, M-23A and M-23B Electric Switch Machines

Basic M-23A. M-23B Switch Machine Layout

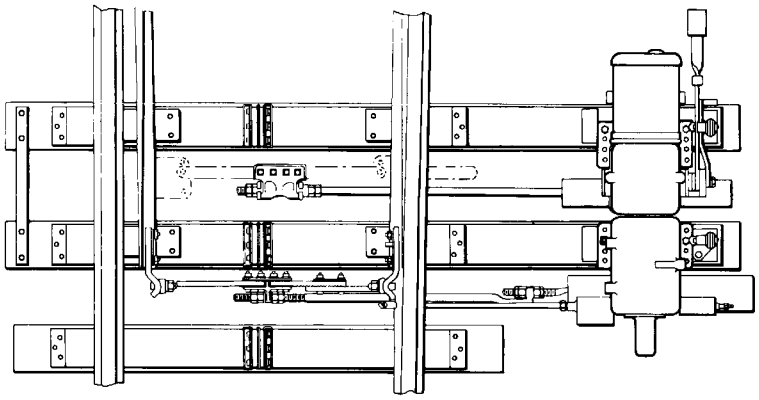

Basic M-3 Switch Machine Layout

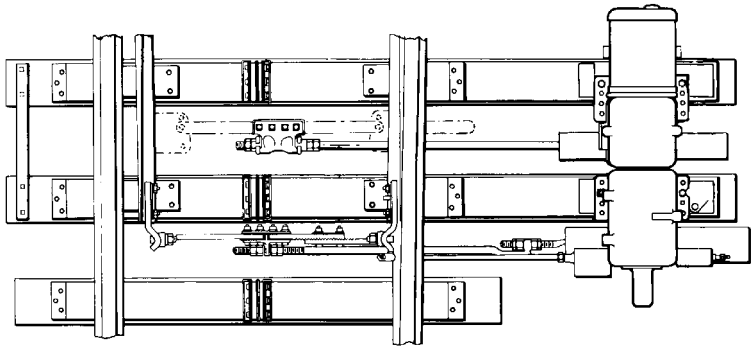

	M-23A Switch Machine with Mechanical Circuit Controller					
US&S Order No.	Layout	Old Machine (1)	Motor (Vdc)	Speed (Sec.)	Gear Ratio	Options Ref. (2)
N4511600501	Left-Hand	N320010-005	20	15	360:1	C, N
N4511600502	Right-Hand	N320010-006	20	15	360:1	C, N
N4511600504	Right-Hand	N320514-001	20	26	528:1	C, E, F, N
N4511600505	Left-Hand	N320514-002	20	26	528:1	C, N
N4511600507	Right-Hand	N328498	20	15	360:1	N
N4511600508	Left-Hand	N328499	20	15	360:1	N
N4511600510	Right-Hand	N381743	110	4.5	189:1	B, N
N4511600511	Left-Hand	N381743-001	110	4.5	189:1	B, N
N4511600513	Left-Hand	N398218-001	20	26	528:1	G, N
N4511600514	Right-Hand	N399387-002	110	4.5	189:1	C, N
N4511600521	Right-Hand	--	20	26	528:1	B, N
N4511600522	Right-Hand	--	110	4.5	189:1	B, N
N4511600523	Right-Hand	--	110	4.5	189:1	B, O, P, Q
N4511600524	Left-Hand	--	110	4.5	189:1	B, O, P, Q
N4511600526	Left-Hand	--	20	15	360:1	J, N, P
N4511601201	Right-Hand	--	110	4.5	189:1	B, O, S
N4511601202	Left-Hand	--	110	4.5	189:1	B, O, S
N4511601205	Left-Hand	--	110	4.5	189:1	B, O
	Note (1): For reference only. Note (2): Refer to configuration guide for options.					

M-3, Low-Profile M-3, M-23A and M-23B Electric Switch Machines

UNION SWITCH & SIGNAL

	M-23A Switch Machine with ECC Retrofit					
US&S Order No.	Layout	Motor (Vdc)	Gear Ratio	Pt. Det. Bar	Aux. Point Det. Prox. Sensors	Options Ref. (1)
N42250101	Left-Hand	110	189:1	Threaded	X	G, H
N42250102	Right-Hand	110	189:1	Threaded	X	G, H
N42250103	Left-Hand	110	360:1	Threaded	X	G, H
N42250104	Right-Hand	110	360:1	Threaded	X	G, H
N42250107	Left-Hand	20	528:1	Threaded	X	G, H
N42250108	Right-Hand	20	528:1	Threaded	X	G, H
N42250109	Left-Hand	110	189:1	Clevis	--	B, E
N42250110	Right-Hand	110	189:1	Clevis	--	B, E
N42250115	Left-Hand	20	528:1	Clevis	--	D
N42250116	Right-Hand	20	528:1	Clevis	--	D
N42250117	Left-Hand	110	189:1	Threaded	X	B
N42250118	Right-Hand	110	189:1	Threaded	X	B
N42250119	Left-Hand	110	189:1	Threaded	X	B
N42250120	Right-Hand	110	189:1	Threaded	X	B
	Note (1): Refer to Configuration Guide for options.					

	M-23B Switch Machine with Mechanical Circuit Controller					
US&S Order No.	Layout	Old Machine (1)	Motor (Vdc)	Speed (Sec.)	Gear Ratio	Options Ref. (2)
N4511600601	Right-Hand	N321365	20	15	360:1	D, N
N4511600602	Left-Hand	N321365-001	20	15	360:1	D, N
N4511600611	Right-Hand	N394803	110	4.5	189:1	B, N
N4511600612	Left-Hand	N394803-001	110	4.5	189:1	B, N
N4511600614	Left-Hand	N438177	20	26	528:1	J, N
N4511600615	Right-Hand	N438177-001	20	26	528:1	J, N
	Note (1): For reference only. Note (2): Refer to configuration guide for options.					

	M-23B Switch Machine with ECC Retrofit					
US&S Order No.	Layout	Motor (Vdc)	Gear Ratio	Pt. Det. Bar	Aux. Point Det. Prox. Sensors	Options Ref. (1)
N42250207	Left-Hand	20	528:1	Threaded	X	G, H
N42250208	Right-Hand	20	528:1	Threaded	X	G, H
N42250209	Left-Hand	110	189:1	Clevis	X	B, E, F
N42250210	Right-Hand	110	189:1	Clevis	X	B, E, F
N42250217	Left-Hand	20	528:1	Threaded	--	E, H, J
N42250218	Right-Hand	20	528:1	Threaded	--	E, H, J
N42250219	Left-Hand	110	189:1	Clevis	--	B, E
N42250220	Right-Hand	110	189:1	Clevis	--	B, E
	Note (1): Refer to Configuration Guide for options.					

UNION SWITCH & SIGNAL

RSE-6A2
Rev. 7-03

M-3, Low-Profile M-3, M-23A and M-23B Electric Switch Machines

	Standard M-3 Switch Machine with Mechanical Circuit Controller					
US&S Order No.	Layout	Old Machine (1)	Motor (Vdc)	Speed (Sec.)	Gear Ratio	Options Ref. (2)
N4511600303	Right-Hand	N345101	110	4.5	189:1	A, K, N
N4511600305	Right-Hand	N437914	110	4.5	189:1	B, C, N
N4511600306	Left-Hand	N437914-001	110	4.5	189:1	B, C, N
N4511600307	Right-Hand	N438500	110	4.5	189:1	B, O
N4511600308	Left-Hand	N438500-0001	110	4.5	189:1	B, O
N4511600311	Left-Hand	N438587-0001	110	4.5	189:1	B, C, O
N4511600312	Right-Hand	--	110	4.5	189:1	B, C, O
	Note (1): For reference only. Note (2): Refer to configuration guide for options.					

	M-3 Switch Machine with ECC Retrofit					
US&S Order No.	Layout	Motor (Vdc)	Gear Ratio	Pt. Det. Bar	Aux. Point Det. Prox. Sensors	Options Ref. (1)
N42250001	Left-Hand	110	189:1	Threaded	--	B, E
N42250002	Right-Hand	110	189:1	Threaded	--	B, E
N42250009	Left-Hand	110	189:1	Clevis	--	E
N42250010	Right-Hand	110	189:1	Clevis	--	E
N42250017	Left-Hand	110	189:1	Clevis	X	B, C, E, F
N42250018	Right-Hand	110	189:1	Clevis	X	B, C, E, F
	Note (1): Refer to Configuration Guide for options.					

	Low-Profile M-3 Switch Machine with Mechanical Circuit Controller							
US&S Order No.	Layout	Motor (Vdc)	Speed (Sec.)	Gear Ratio	Control	Clutch Setting	Point Det. Latch	Heaters (1)
N4511601401	Left-Hand	110	4.5	189:1	3-Wire	13A	X	X
N4511601501	Right-Hand	110	4.5	189:1	3-Wire	13A	X	X
	Note (1): Machines equipped with circuit controller and motor compartment heaters.							

UNION SWITCH & SIGNAL

RSE-6A3
Rev. 7-03

Support and Upgrade Equipment for Style "M" Switch Machines

General Description

US&S provides a complete selection of support and upgrade equipment for M-3, M-23A and M-23B Electric Switch Machines to help better adapt these machines to their installation locations, as well as improve reliability and maintainability.

A fully enclosed permanent magnet motor is available as a retrofit item for existing "M" series machines with older style wound field motors. This type of motor provides lower inductance, better EMI immunity and higher efficiency than previous wound field motors, and incorporates simpler 3-wire control.

A latchout retrofit kit is available for the "M" style machine point detector mechanism. Parts in this kit enable the controller indication contacts to be held open (until reset) when the point detector bar is displaced while the machine is in locked-up condition (i.e. switch points obstruction).

A foot-operated latch stand can be used to capture and lock the "M" series switch machine hand throw lever. This device is separately mounted near the arm and is designed to accept a pad lock.

US&S provides two types of point detector bars for M-3. M-23A and M-23B electric switch machines with mechanical circuit controllers. These bars are constructed of high strength steel and designed for a specific companion point detector connecting rod. Each rod is designed for mating with a ball end type point detector lug or stud. A lubrication-free bushing kit is available for the point detector bar (see ordering tabulation).

Note: This bars are not compatible with the M-3E, M-23E-A and M-23E-B (see ***RSE-6A1***), or older M series switch machines retrofitted with US&S' Electronic Circuit Controller (see ***RSE-6A2***). Contact your US&S Account Executive for ordering information on these particular point detector bars.

Point Detector Bars

N284475



N285907



Latch Stand

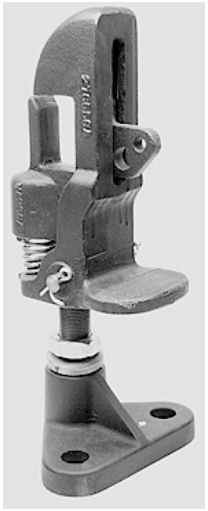

Lock rods are available in several configurations to accommodate different M-3, M-23A and M-23B switch machine installations. The rods are constructed of high strength steel and feature adjustable notch spacing for optimum compatibility with various instal-lations. Lock rod connecting rod lengths are for a nominal dimension of 45" from gage to center of machine.

Ordering Information

- Refer to ordering tabulation on reverse side for motor, latchout kit, latch stand, point detector bars, lock rods and lock connecting rods.
- Contact your US&S Account Executive for point detector bars used in M series switch machines equipped with the Electronic Circuit Controller (ECC).
- Order retrofit motor kits according to motor voltage and gear ratio of existing machine.

Retrofit Latchout Kit

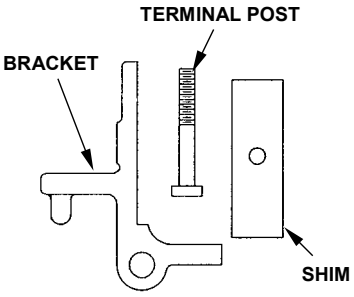

UNION SWITCH & SIGNAL

RSE-6A3
Rev. 7-03

Support and Upgrade Equipment for Style "M" Switch Machines

Ordering Ref. "A" – Lock Rod



Ordering Ref. "C" – Lock Rod for Lock Rod Connecting Rod

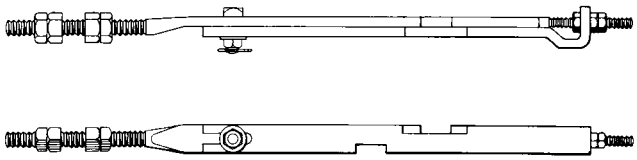

Ordering Ref. "B" – Lock Rod Lug

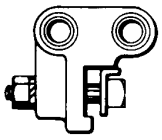

Ordering Ref. "D" – Lock Rod Connecting Rod with Lug End

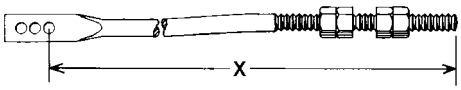

Ordering Ref. "E" – Lock Rod Connecting Rod with Spherical End

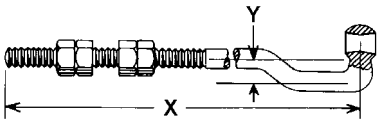

	Retrofit Kit for Field-Wound Motor		
US&S Order No.	Voltage	Gear Ratio	Old Motor (1)
X4511601101	110 Vdc	189:2	N306349
X4511601102	20 Vdc	360:1	N150293
	Note (1): For reference only.		

	Retrofit Latchout Kit
US&S Order No.	
N4511614901	Retrofit Latchout Kit for all style "M" machines (includes instructions)

	Latch Stand
US&S Order No.	
N286609	Latch Stand (3/4" lag screw mount) for M-23A, M-23B machines.

	Point Detector Bars and Bushing Kit (for all style "M" machines)		
US&S Order No.	End Type	Min. Point Throw	Max. Point Throw
N284475	Screw Jaw	4-1/4"	6"
N304195	Screw Jaw	2-3/8"	4-3/8"
N285907	Threaded	--	--
X41600016	Lubrication-free point detector bar bushing kit		

	Lock Rods and Lock Connecting Rods (for all style "M" machines)			
US&S Order No.	Type	Application	Design	Dwg. Ref.
N149866	Lock Rod	Lug N123471	--	A
N123471	Lock Rod Lug	C-Rod N332195	--	B
N258643	Lock Rod	C-Rod N285686	--	C
N258686	L.R. Conn-Rod	L.R. N258643	Lug End	D
N332195	L.R. Conn-Rod	L.R.L. N123471	Spherical End	E

UNION SWITCH & SIGNAL

RSE-6A4
Rev. 7-03

Electronic Circuit Controller (ECC) Field Test Unit

The portable ECC Field Test Unit provides comprehensive testing of installed Electronic Circuit Controllers (ECC) in the new M-3E and M-23E switch machines, as well as individual proximity sensors associated with these machines. With this test unit, maintainers can perform numerous detailed tests on the ECC without having to remove it from the machine or cycle the machine's mechanical subassemblies.

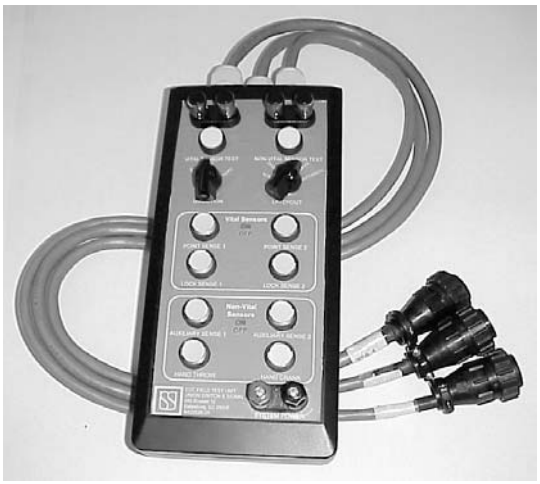

General Description

Functions and Installation

The portable ECC Field Test Unit is a diagnostic tool for testing an ECC while installed in an "M" series switch machine; it can also test individual proximity sensors associated with a given switch machine. It simulate the equipment connected to the ECC and manipulate the states of that equipment to determine how the ECC responds. This provides fast indication as to the status of the ECC and assists in the diagnosis of any problem that may arise. No actual cycling of the switch machine is necessary to perform testing.

The ECC Field Test Unit connects directly to the three front connectors of the ECC and does not require that the ECC be removed from a switch machine. When power is applied to the Field Test Unit, the ECC will also be powered on.

User Indicators and Controls

The ECC Field Test Unit incorporates LEDs that indicate the current state of the switch machine. Dual-colored LEDs show the state of each vital point and lock sensor. Green LEDs report the indication input, indication output, and auxiliary sensor state definition. Red LEDs are provided to determine when the motor is disabled and when the ECC is in a latched-out state.

ECC Field Test Unit controls include eight push button switches that light green when pushed in (ON state) and light RED when released (OFF state). These buttons represent the eight possible sensors that can be installed in an M-3E, M-23E, M-3 retrofit or M-23 retrofit switch machine and simulate the LEDs on the ECC. Hand crank and hand throw sensors are simulated on the unit's terminal block by a resistor such that the ECC still reads a return current as if they were installed. So regardless of the machine's configuration, the ECC can still be tested using the Field Test Unit.

Two rotary switches on the ECC Field Test Unit simulate the jumper configurations that are contained in the switch machine junction box. A "Direction" rotary switch tells the ECC if the switch is configured as Left Hand Points Closed (LHPC) or Right Hand Points Closed (RHPC). A "Latchout" rotary switch tells the ECC how to respond to a latchout situation that can be simulated by the Field Test Unit.

Two momentary push buttons at the top of the Field Test Unit are used to switch a vital or non-vital sensor into the circuit for testing.

Advantages

- Performs comprehensive ECC and peripheral sensors tests
- Fully portable
- Easy to connect and operate
- Provides test power source to ECC
- No removal of ECC unit required
- No cycling of switch machine required

UNION SWITCH & SIGNAL

RSE-6A4
Rev. 7-03

Electronic Circuit Controller (ECC) Field Test Unit

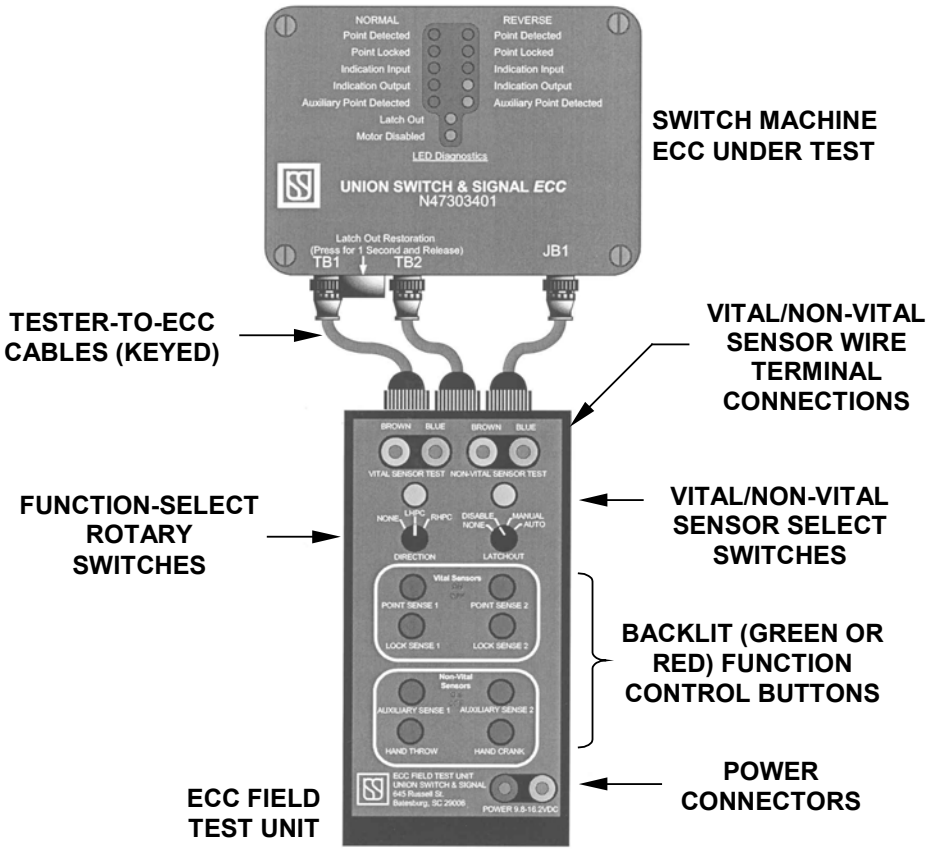

Specifications

Dimensions:	10”L x 4-/34” x 2”D
Weight:	1.0 lb.
Power Input:	9.8 Vdc to 16.2 Vdc @ 1.5A

Ordering Information

- Refer to ordering tabulation for ECC Field Test Unit part number.
- Unit replaced as a complete assembly, replacement parts not available

	Tester for ECC-Equipped Machines
US&S Order No.	
N42252601	Electronic Circuit Controller Field Test Unit

Switch Machines and Associated Equipment

UNION SWITCH & SIGNAL

RSE-6B1
Rev. 7-03

A-10 Electro-Pneumatic Switch Machine

General Description

The A-10 Electro-Pneumatic switch machine is a rack and pinion type machine. It employs two identical single-acting air cylinders with identical piston assemblies, a vertical crank shaft, a circuit controller and a point detector mechanism. The switch assembly is encased in a rugged case iron housing with mounting flanges for direct mounting to the track ties.

The A-10 incorporates a radial arm point detector mechanism. Movement of the detector arm causes a shift in the circuit controller contacts. This prevents making indication contacts unless both the machine and the switch point are in their full respective normal or reverse position. The detector mechanism is designed to escape wear from frequent operation of the switch and from external vibrations. Effects of switch stroke variation are compensated by adjustment of external mechanical parts.

All A-10 machines are provided with a hand crank for manual operation. For safety, the crank cannot be meshed with the crank's gear until the valve yoke has been removed, which cuts off the machine's air supply. Conversely, to return to power operation, the hand crank must be removed.

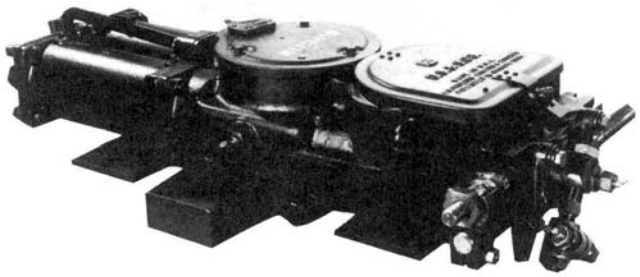

Advantages

- Designed for single switch installations
- Ideal for installation in mass transit tunnels and other tight spaces
- Right or left-hand layout available
- Built-in circuit controller and point detector
- Interchangeable parts

Ordering Information

- Refer to ordering tabulation for A-10 part numbers.
- To order heaters for motor and circuit controller compartments (recommended for extreme cold weather areas), contact your US&S Account Executive.
- If ordering A-10 machines for new switch layouts, please supply all required specifications and mounting dimensions according to approved track plans; contact your US&S Account Executive for any assistance needed.
- Request US&S Service Manual SM-5041 for replacement parts.

	A-10 Machines
US&S Order No.	
N159020	A-10 E.P. Switch Machine: Right-hand layout
N163419	A-10 E.P. Switch Machine: Left-hand layout

See reverse side for unit dimensions and typical layout.

UNION SWITCH & SIGNAL

A-10 Electro-Pneumatic Switch Machine

RSE-6B1
Rev. 7-03

A-10 Switch Machine Dimensions

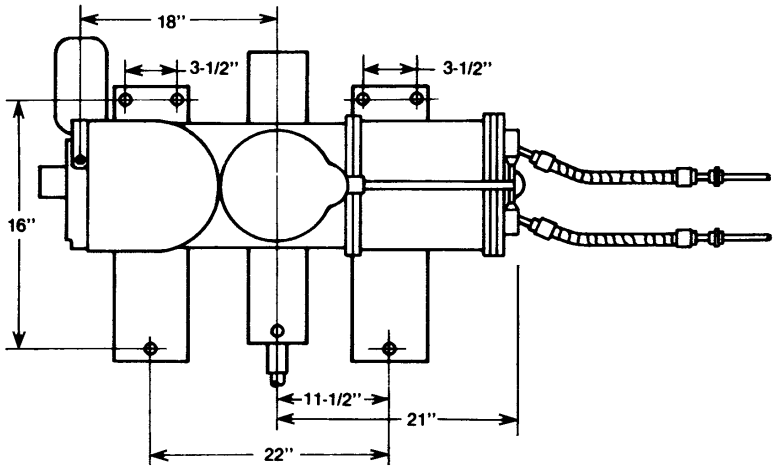

A-10 Switch Machine Typical Layout

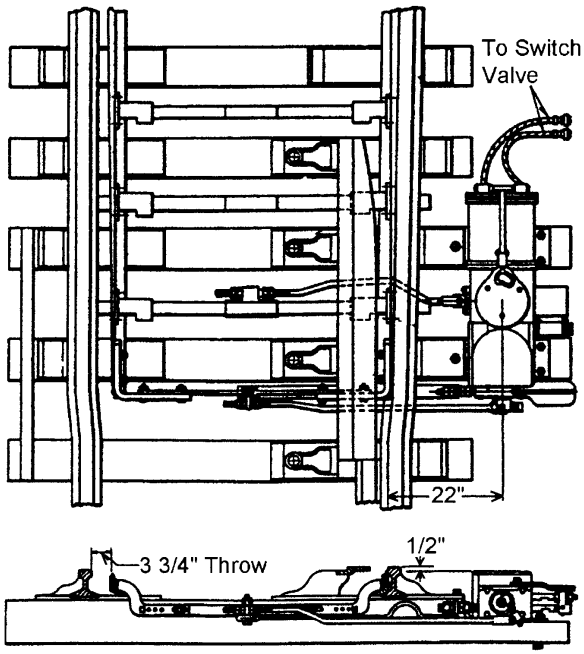

Switch Machines and Associated Equipment

UNION SWITCH & SIGNAL

RSE-6C1
Rev. 7-03

YM-2000™ Yard Electric Switch Machine

US&S' YM-2000 Electric Switch Machine is a simple, low cost machine with an excellent service record in railroad yard applications. Unlike many switch machines in its class, the YM-2000 can handle trailing moves at maximum yard speeds (up to 20 mph). This feature, combined with multiple control options and fast transition speeds, makes the YM-2000 the obvious choice among electric machines for classification yards, receiving and departure areas, industrial sidings, and flat switching or storage yards.

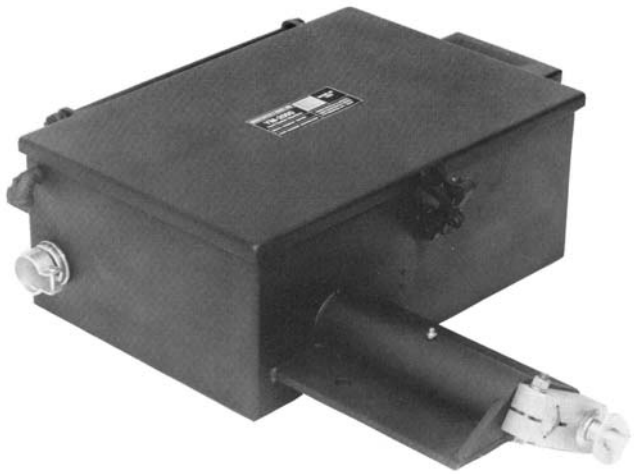

General Description

The YM-2000 Switch Machine is arranged in a compact, low-profile steel case that allows between-the-ties mounting close to the track. Right or left-hand layout is possible with the same machine. Exterior surfaces are protected with Polane® epoxy paint, a new coating which provides exceptional resistance to corrosion and scratching. Stainless steel is used for all key hardware for long term corrosion protection. Overall, the machine meets the NEMA-3R standard for environmental protection of internal components. Inside, a 15W heater is provided to prevent condensation and frost formulation on electrical contacts. To allow use in tropical climates, all electrical contacts are coated with a special varnish.

The movement of the YM-2000 Switch Machine is developed by an instantly reversible, right-angle gear motor (worm type). At nominal voltage and ambient temperature the motor throws the switch points in just two seconds. Output shaft fasteners on the motor incorporate locking tabs to eliminate loosening from vibrations. Similarly, locking roll pins are used on the gear housing to maintain tightness.

An electric brake mechanism is provided on the motor to maintain switch point closure against the stock rail at the end of the stroke. The brake is electrically released by a solenoid when the motor is energized, and actuated by springs at the end of the stroke travel when motor energy is removed.

Several design features make the YM-2000 well suited for trailing moves. The machine contains a specially designed clutch that is set to slip during a trailing move, thereby preventing any resulting movement of the internal gear motor. This feature greatly reduces machine wear and potential damage. When the clutch slips, cams on the clutch housing actuate control/indication switches which energize the gear motor to move the switch points to either the full normal or full reverse position.

The YM-2000 can be manually operated by inserting a hand crank at the end of the drive motor. Electric control options include wayside push-button or remote office. Electric operation is automatically interrupted when the hand crank is inserted.

A US&S U-5 Circuit Controller (refer to ***RSE-6F1***) can be added to the YM-2000 switch layout to provide point detection. Switch points can be displayed using a searchlight dwarf signal or US&S' ES-20 color light signal (see ***RSE-7C1***).

Advantages

- Trailable, fast-acting electric machine
- Low-cost, reliable operation
- Hand crank, local or remote electric control
- NEMA-qualified environmental protection
- Simple design, easy maintenance

UNION SWITCH & SIGNAL

YM-2000™ Yard Electric Switch Machine

RSE-6C1
Rev. 7-03

Specifications

Weight:	250 lbs.
Throw Distance:	6 in. (15.24 cm)
Rated Output:	1000 lbs. (454 kg)
Throw Time:	2 seconds @ 115 Vac, 60 Hz
Power Input:	110 Vac (±20%), 60 Hz
Inrush Current:	42A during throw @115 Vac,
Running Current:	7A to 8A @ 115 Vac, 60 Hz
Max. Operating Current:	15A ±10%
Operating Temp.:	-40°C to + 70°C
Heater:	115V, 15W
Trailing Move:	20 mph (32 kph), max.
Vibration Limit:	1G@ 5 to 100 Hz

Ordering Information

- Refer to ordering tabulation below for YM-2000 part numbers.
- If ordering YM-2000 machines for new switch layouts, please supply all required specifications and mounting dimensions according to approved track plans; contact your US&S Account Executive for any assistance needed.
- Request US&S Service Manual SM-6455 for replacement parts.

Machine Dimensions

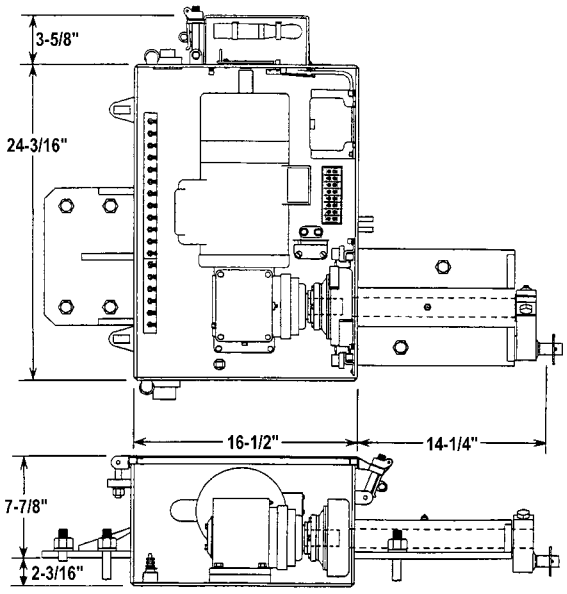

Typical Layout

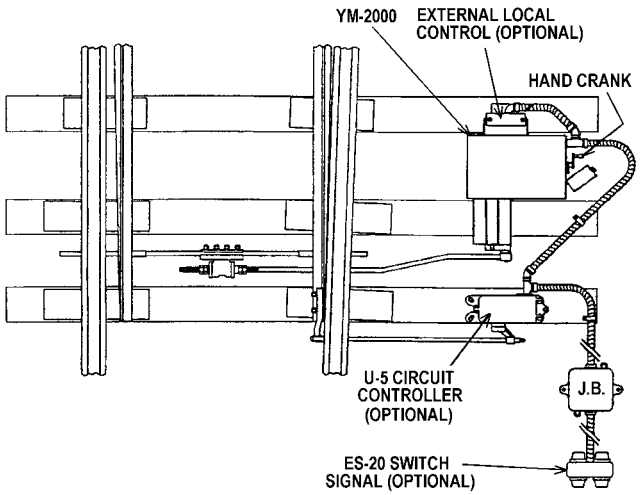

	YM-2000 Machines
US&S Order No.	
N4510630301	YM-2000 Mach. with 110 Vac motor/110 Vac contactor
N4510630303	YM-2000 Mach. with 110 Vac motor/24 Vac contactor

UNION SWITCH & SIGNAL

RSE-6D1
Rev. 7-03

DA-10 Yard Electro-Pneumatic Switch Machine

The DA-10 Electro-Pneumatic Switch Machine is an extremely fast, direct acting switch machine suitable for a wide variety of yard applications. It may be used in right or left-hand layouts. Any given machine can be readily converted to the alternate arrangement because of fully interchangeable parts.

A key component of the DA-10 Switch Machine has been an operating valve equipped with ironclad electromagnets in the machine's cylinder valve head. To provide a more economical and readily available alternative to the ironclad electromagnets, US&S has developed a DA-10 Valve Head Retrofit Kit.

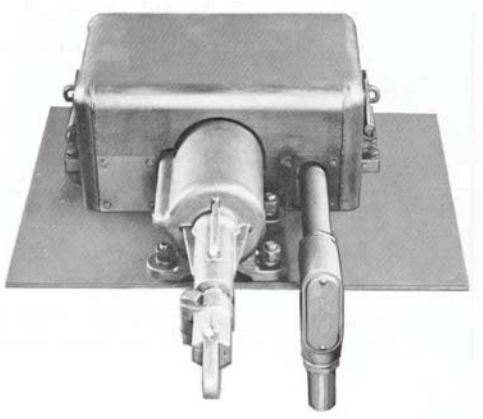

General Description

Machine

The basic DA-10 Switch Machine consists of a double acting, 5" diameter cylinder with a Pilotair valve. In turn, the Pilotair valve controls the flow of air that drives a piston. This valve also provides the exhaust ports for venting the cylinder. Fittings are provided for periodic lubrication to insure a minimal amount of friction during piston rod travel.

With 100 lbs. of air pressure and a 22 Vdc supply, the DA-10 Switch Machine completes one operation (switch normal to reverse or reverse to normal) in approximately 0.4 seconds. Since air under pressure is always connected to one end position, the switch piston will always be either extended or retracted, holding the switch in position.

Switch point slamming is prevented by two "choked" exhaust ports that vent air near the end of the piston stroke.

Valve Head Retrofit Kit

The DA-10 Valve Head Retrofit Kit consists of a newly designed valve head and an operating valve with integral electro-magnetic coils, which supercede the old ironclad electromagnets. The new coils are readily available, off-the-shelf items. All new US&S DA-10 Switch Machines are built with this updated Valve Head Assembly. The Valve Head Assembly Retrofit Kit includes a cylinder head, an operating valve with electromagnetic coils, a gasket, bolts and lock washers. The DA-10 Valve Head Retrofit Kit replaces the cylinder head assembly of any DA-10 Switch Machine.

Advantages

- Well suited for classification yards
- Fast-acting switch movement
- Trailable operation

Advantages (cont'd)

- Choked exhaust ports prevent point jamming
- Head kit reduces maintenance, costs
- Head kit direct functional replacement for old head.
- Readily available replacement parts in head kit.

Specifications

Note: These specifications apply to DA-10 switch Machines equipped with the new DA-10 Valve Head Retrofit Kit and to all newly manufactured DA-10 units.

Piston:	Double-acting, 5" diameter, 6" stroke.
Air Pressure:	55-130 psi (original DA-10 range was 55-150 psi).
Elec. Characteristics:	9.6Vdc-13.2Vdc (12Vdc nominal) @ 0.78 Amps*.
	19.2Vdc-26.4Vdc (24Vdc nominal) @ 0.38 Amps**.
Cycle Time:	Normal-to-reverse position or reverse-to-normal position within 0.4 seconds @ 100 psi with 22Vdc power supply.
* Orig. DA-10 range:	5.0Vdc-14Vdc (12Vdc nominal) @ 0.092 Amperes.
** Orig. DA-10 range:	8.3Vdc-26Vdc (24Vdc nominal) @ 0.058 Amperes.
Magnet Valve Options:	130 or 400 ohms

UNION SWITCH & SIGNAL

RSE-6D1
Rev. 7-03

DA-10 Yard Electro-Pneumatic Switch Machine

Ordering Information

- Refer to ordering tabulation for DA-10 top assembly and key component part numbers.
- Note units equipped with Valve Head Retrofit components.
- Machine, cover and base plate can be ordered under a single “X” part number, or as individual components.
- If ordering DA-10 machines for new switch layouts, please supply all required specifications and mounting dimensions according to approved track plans; contact your US&S Account Executive for any assistance needed.
- Request US&S Service Manual SM-5708 for replacement parts.

Machine Dimensions

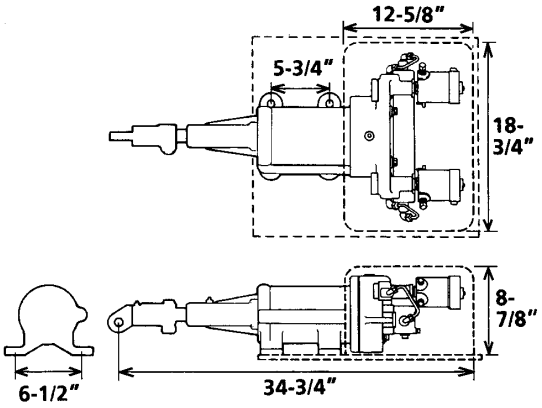

Typical Layout

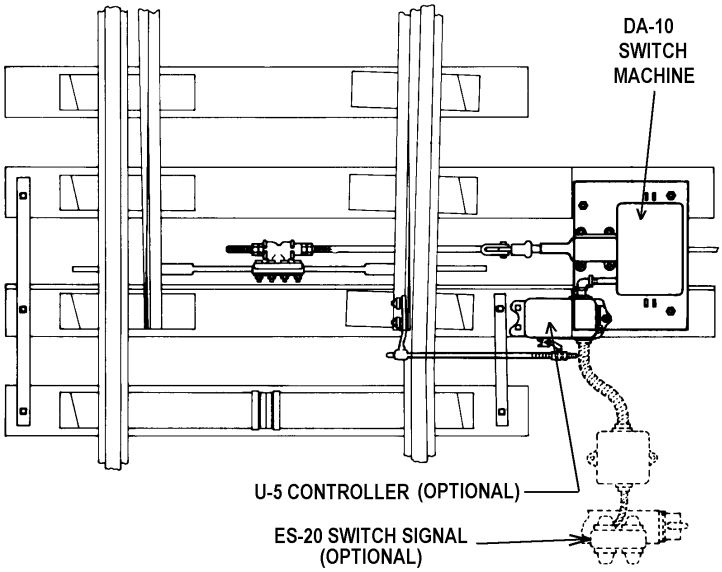

	DA-10 Machines				
US&S Order No.	DA-10 Machine	Voltage	Cover	Base Plate	Includes Retrofit Head Kit
X42500004	X	12 Vdc	X	X	--
X42500005	X	24 Vdc	X	X	--
N42500101	X	12 Vdc	--	--	--
N42500102	X	24 Vdc	--	--	--
N42500201	--	12 Vdc	--	--	X
N42500202	--	24 Vdc	--	--	X

	Valve Head Retrofit Kits		DA-10 Key Components
US&S Order No.		US&S Order No.	
N42500201	Kit for 12 Vdc Machines	N371995	Magnet
N42500202	Kit for 24 Vdc Machines	N372039	Cover
		M372070	Base Plate

Switch Machines and Associated Equipment

UNION SWITCH & SIGNAL

RSE-6E1
Rev. 7-03

T-20 and T-21 Hand-Operated Switch Machines

US&S' T-20 and T-21 Switch Machines are typically used where facing lock protection is required to help safeguard the movement of high speed mainline traffic over a switch. These machines use a rack and escapement type mechanism and each comes with a circuit controller.

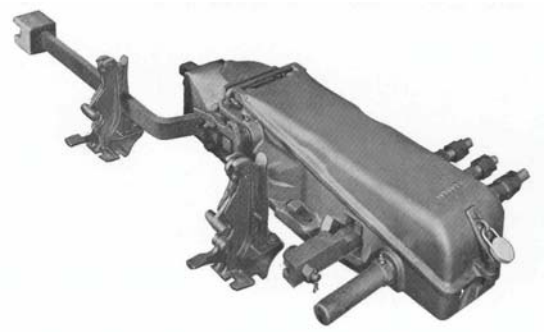

General Description

The complete T-20/T-21 operating mechanism is enclosed in a rugged cast iron case with a lockable cover. "T-20" is the basic hand operated switch machine, while "T-21" is a T-20 equipped with a target staff. These switch machines contain a lock bar which, with the switch in the normal position, enters a notch in the lock rod. This arrangement locks the switch points in their normal position to provide facing point lock protection. In addition, the escapement crank mechanism is configured so that the driving system itself locks the switch in either extreme position.

Three basic types of circuit controllers are available with the T-20 or T-21 Switch Machines, including standard, standard with reverse point detection, and heavy duty. These contain up to four normally open or closed contacts which are operated jointly by the lock rod and the point detector bar. The contacts indicate whether the switch is in the proper position for facing point moves. In the standard controller equipped for reverse point detection, the reverse detector device contains four additional pairs of contacts that indicate switch points in the reverse direction.

The T-20 and T-21 Switch Machines may be used in right or left-hand layouts. Although the machines are externally configured for left or right layouts, all parts are interchangeable to allow conversion to the opposite layout.

Advantages

- Useful where facing point lock protection is needed.
- Positive switching action
- Rugged construction

Ordering Information

- Refer to ordering tabulation on reverse side for T-20 and T-21 part numbers.
- To order a T-21 machine, add target staff to T-20. Target staff includes rod only, not indicator target.
- If ordering T-20 or T-21 machines for new switch layouts, please supply all required specifications and mounting dimensions according to approved track plans; contact US&S for any assistance needed.
- Request US&S Service Manual SM-5417 for replacement parts.

Machine Dimensions

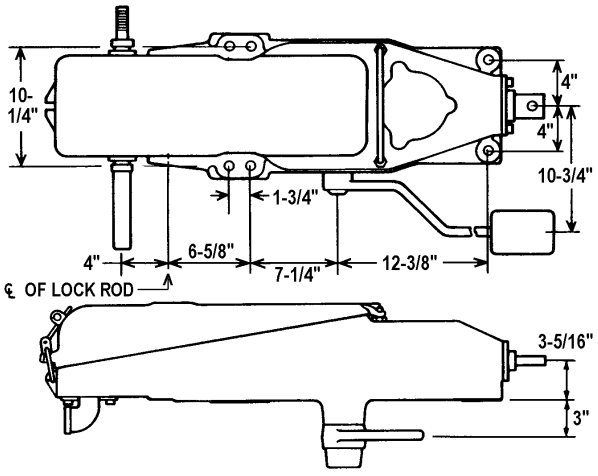

See reverse side for typical layout.

UNION SWITCH & SIGNAL

RSE-6E1
Rev. 7-03

T-20 and T-21 Hand-Operated Switch Machines

Typical Layout

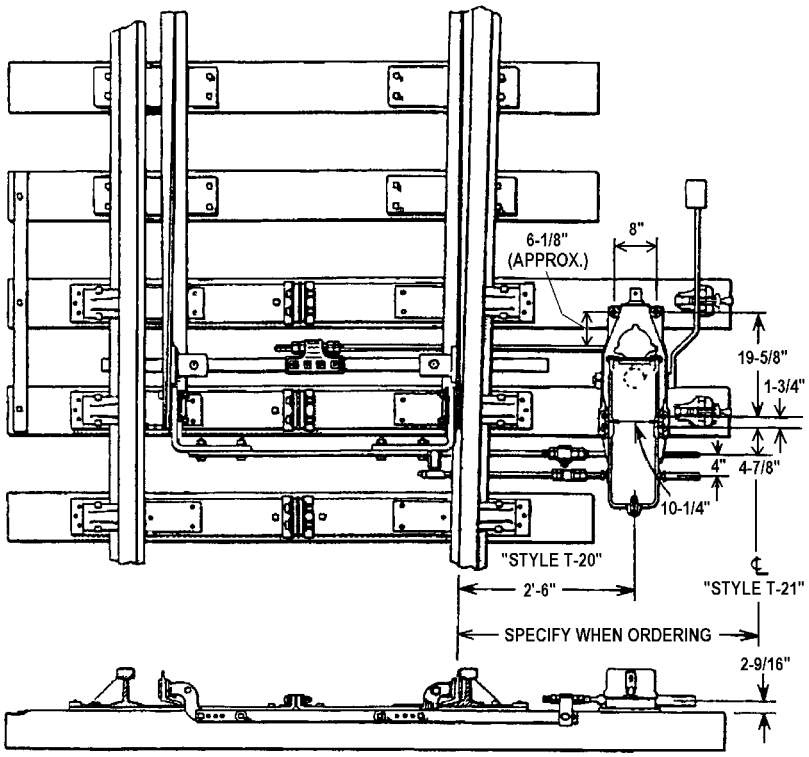

Low Target Staff N383806

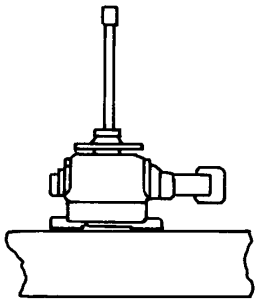

High Target Staff N383807

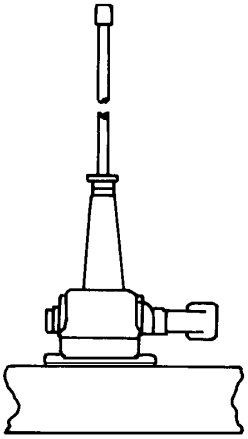

	Switch Machines				
US&S Order No.	Contacts (1)	Reverse Pt. Detect	Switch Pt. Layout	Closed	Notes
N212788	4 Open	--	Left-Hand	Left-Hand	(2)
N3856350002	2 Open, 2 Closed	--	Left-Hand	Left-Hand	--
N3856350003	2 Open, 2 Closed	--	Left-Hand	Right-Hand	--
N385636	4 Open	--	Right-Hand	Right-Hand	--
N3856360002	4 Open	--	Left-Hand	Left-Hand	--
N385637	2 Open, 2 Closed	--	Right-Hand	Right-Hand	--
N3856370002	2 Open, 2 Closed	X	Left-Hand	Left-Hand	--
	Note (1): Controller contacts are heavy duty (H.D.). Note (2): Machine with heavy-duty external terminals.				

	Conversions	
US&S Order No.	Target Staff	Height
N383605	Low	15-5/8"
N383607	High	7', 5-1/16"

UNION SWITCH & SIGNAL

RSE-6F1
Rev. 7-03

U-5 Circuit Controller

General Description

The U-5 Switch Circuit Controller is a ruggedly constructed unit used for electrically detecting the position of rail switch points. It is available in 4-way sizes for 2-position, 3-position, and polarized applications. The U-5 terminals, contacts, operating cams and other compartments are installed in a rugged and weather-tight cast iron housing. A hinged cover provides easy internal access for inspection, adjustments and maintenance. Two elbow type ventilators provide air circulation and minimize condensation within the housing.

The machine's 1-1/2" shaft provides a large bearing surface, reduced bushing wear, and a large surface area to engage a micrometer adjusting screw (preventing wear and loss in sensitivity). Shaft bearings are fashioned from bronze and use pressure grease fittings. A 2-position controller may be used without change of parts for polarized applications through cam and circuit adjustments. A 2-position controller may also be used as a 3-position controller for two circuits by using two cam spaces for each 3-position circuit and making the appropriate cam adjustments. A 3-position controller for four circuits is obtained by using combined 3-position cams in place of a 2-position cam and substitution of the cam shaft.



Advantages

- Provides reliable detection of switch point position
- Numerous applications
- Easily adjusted

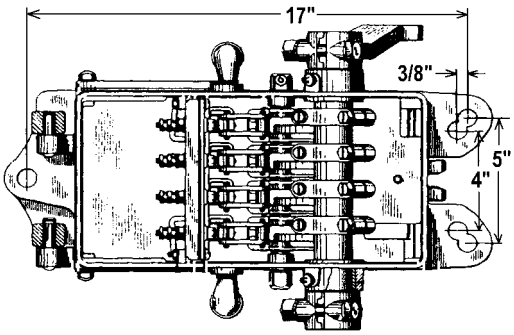

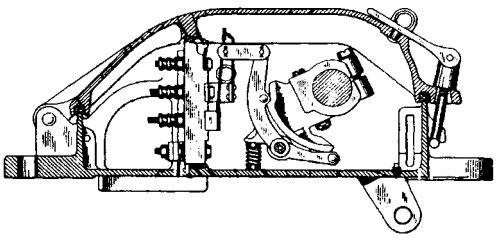

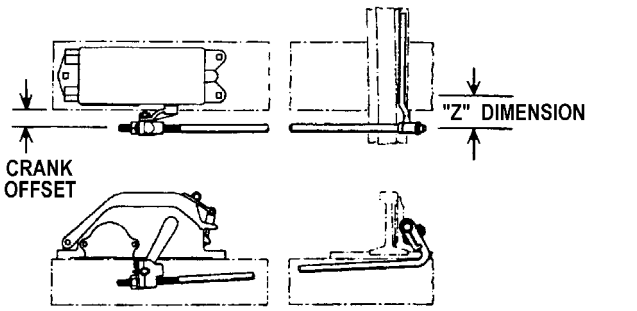

APPLICATION OF SWITCH CIRCUIT CONTROLLER TO NEAR SWITCH POINT

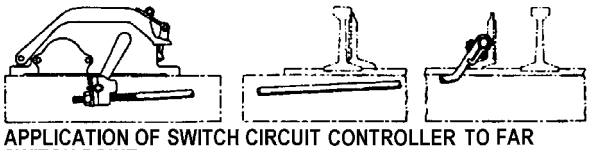

APPLICATION OF SWITCH CIRCUIT CONTROLLER TO FAR SWITCH POINT

UNION SWITCH & SIGNAL

U-5 Circuit Controller

RSE-6F1
Rev. 7-03

Ordering Information

- Refer to ordering tabulation on reverse side for U-5 part numbers.
- When placing an order, please indicate:
  - Standard or yard type machine
  - Cam arrangement
  - Contact arrangement
  - Crank offset: Use tie location to determine proper offset, refer to "Z" dimension in diagram.
- Contact US&S for 6-way models of the U-5.
- Refer to ***RSE-6H1*** for circuit controller operating rods.
- Request US&S Service Manual SM-4516 for replacement parts.

	U-5 Circuit Controllers						
US&S Order No.	Application	Cam Position	Return Spring	3/4" Ball Stud Insulated	3/4" Ball Stud Non-Ins.	2-13/32" Ball Stud Insulated	2-13/32" Ball Stud Non-Ins.
X184035	Standard (1)	4-3	--	X	--	--	--
X184136	Standard (1)	4-2	--	X	--	--	--
X190700	Standard (1)	4-2	--	--	--	X	--
X191911	Standard (1)	2-2 2-3	X	--	--	X	--
X194433	Standard (1)	2-2 2-3	X	--	--	--	X
X199187	Standard (1)	4-2	X	--	X	--	--
X207228	Standard (1)	2-2 2-3	--	--	X	--	--
X209313	Standard (1)	2-2 2-3	--	X	--	--	--
X218085	Standard (1)	4-2	X	X	--	--	--
X229482	Standard (1)	4-2	X	--	--	X	--
X236956	Standard (1)	2-2 2-3	X	--	X	--	--
X244167	Standard (1)	4-2	--	--	--	--	X
X257184	Standard (1)	4-2	X	--	--	--	X
X371946	Yard (2)	3-3 1-2	--	--	X	--	--
	Note (1): Two wire guides: one blank, one with 1-1/2" tapped hole. Note (2): Two wire guides: one with 2" tapped hole, one with 1-1/2" tapped hole.						

Switch Machines and Associated Equipment

UNION SWITCH & SIGNAL

RSE-6G1
Rev. 7-03

SL-21A Electric Switch Lock

General Description

The SL-21A Electric Switch Lock prevents unauthorized operation of hand throw levers on switch stands. An electric control in the SL-21A provides the only means of disengaging the lock. Basic components include a magnet coil, armature, cam operated contacts, locking dog assembly (with two counterweights), and foot latch assembly. The complete mechanism is housed in a low profile cast iron case and uses a foot latch with a padlock for added security.

In the normal position, the foot latch is pressed and the padlock is in place. When the padlock is removed, a coil return spring raises the foot latch, applying voltage to the lock circuit and energizing an armature. This results in lifting of the lock dog from its notch and releasing the mechanism. The switch can be thrown at this point. The spring-loaded foot latch must be pressed to enable insertion of the padlock. This action removes the voltage, causing the armature to fail away and the lock dog to drop back into place, thus securing the mechanism. Counterweights assist the motion of the lock dog.

Normal arrangement of the cam operated contacts are for the padlocked position. The back contacts are closed and the front contact is open in this position. Typically, there are one front and two back contacts, while the armature normally has two back contacts that are closed when the circuit is de-energized.

The SL-21A is for right-hand assembly. Other optional items include lock rod and lock rod support. US&S can produce custom lock rods to customer specifications.

Advantages

- Provides security for hand-throw switch levers
- Positive-locking design, low profile
- Easily installed and maintained

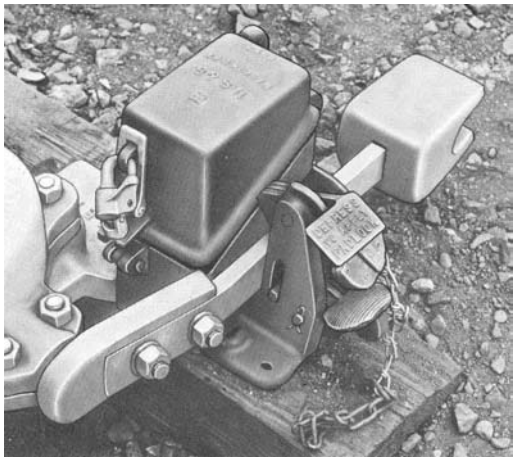

Ordering Information

- Refer to ordering tabulation on reverse side for SL-21A top assembly part numbers and lock rod support components.
- When ordering the SL-21A, please specify if wire inlet plate assembly is to be installed on the hasp or the hinge side.
- Also specify type of switch stand that will incorporate the lock.
- Lever lock rod does not have a standard order number. Order by dimensions shown in RSE-6H2.
- Contact US&S to order:
  - Yale drawer lock
  - Lock suitable for tandem application (locking hand-throw lever in both normal and reverse positions.
- Request US&S Service Manual SM-3225 to order SL-21A replacement parts.

See reverse side for unit and application dimensions.

UNION SWITCH & SIGNAL

SL-21A Electric Switch Lock

RSE-6G1
Rev. 7-03

Unit Dimensions

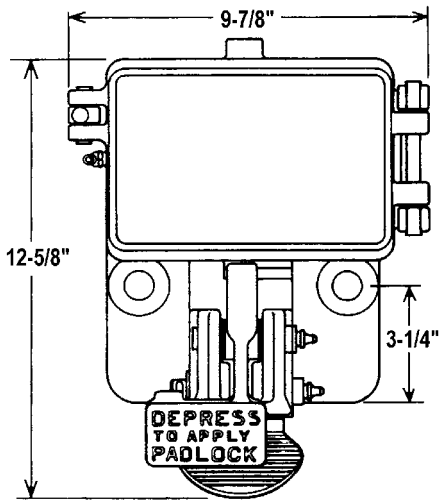

Application Dimensions

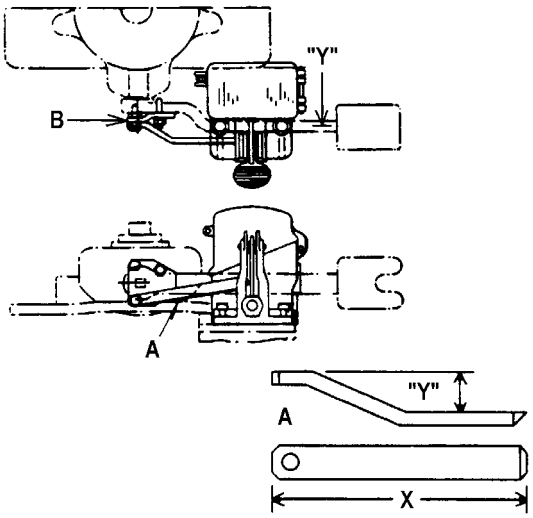

	SL-21A Locks	
US&S Order No.	Mag. Coil Res.	Features
N241331	670	Normal contact arrangement
N272885	280	With lubrication fittings

	Lock Rod Support Components (all qty. = 1)
US&S Order No.	
M105987	Stud
J048090	Nut
J048622	Cotter
J047783	Washer
J039137	Fitting

Switch Machines and Associated Equipment

UNION SWITCH & SIGNAL

RSE-6G2
Rev. 7-03

SL-6A Electric Switch Lock

General Description

The SL-6A Electric Switch Lock is a dc-operated lock mechanism designed for protection of remote area switches. An indicator window shows the status of the locking dog: "LOCKED" or "UNLOCKED". (An optional light be ordered for this display for night reading.) Two styles of the SL-6A assemblies are available, including one with a standard mechanical push rod and a latch type emergency release. The mechanical push rod is normally protected by a car seal and inserted in a slot. With the latch type emergency release, the door-operated push rod operates only one contact; the other is operated by the release rod.

These units have door-operated contacts that are activated by a spring biased push rod. The operating handle has three positions: Normal, latched and unlocked. When the operating handle is moved from the locked to the unlatched (center) position, a circuit is completed for locking. If the unlocking circuit is tied into a track circuit or CTC control, then those circuits must be in the proper conditions before unlocking can occur. When all such conditions are satisfied, the operating handle can be moved to the unlock position. The handle is stopped at the extreme positions by cast lugs on the segment, contacting a machined pad on the base.

A pair of door-operated contacts, one back and one front, are normally closed when the door is closed. The armature contacts are normally closed with the magnets deenergized.

Advantages

- Security for remote area switches
- Pedestal or dwarf level mounting
- "Locked-unlocked" indicator
- Easily installed and maintained



Ordering Information

- Refer to ordering tabulation on reverse side for standard pedestal and dwarf mounted switch locks.
- Contact your US&S Account Executive to order:
  - Lock rod
  - Unit mounting hardware
  - Ventilator
  - Indicator light
  - Extra push button.
  - Any replacement parts
- Request US&S Service Manual SM-3011 for replacement parts.

UNION SWITCH & SIGNAL

SL-6A Electric Switch Lock

RSE-6G2
Rev. 7-03

SL-6A Pedestal Mounted Switch Lock

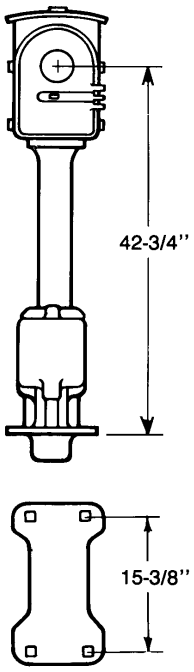

SL-6A Dwarf Base Mounted Switch Lock

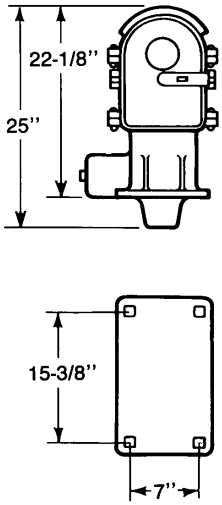

	SL-6A Electric Switch Lock (1)		
US&S Order No.	Mounting	Emerg. Release	Mag. Coil
N381263	Pedestal	Pushbutton	250 ohm
N386119	Pedestal	--	250 ohm
N248296001	Pedestal	Latch	150 ohm
N371944	Pedestal	Latch	250 ohm
N381556	Dwarf Base	Pushbutton	250 ohm
N384120	Dwarf Base	Latch	250 ohm
	Note (1): All units equipped with circuit controller, indicator and standard contact arrangement.		

Switch Machines and Associated Equipment

UNION SWITCH & SIGNAL

RSE-6G3
Rev. 7-03

SL-25 Electric Switch Lock

General Description

The SL-25 Switch Lock is a low style electric switch lock for application to locking levers located between the rails at the middle of hand-operated crossovers (where clearance is limited to 7”). This devices employ a foot-operated latch with padlock, a magnet assembly, armature contacts, cam-operated controls, plunger rod and a mechanical status indicator (“LOCKED”, “UNLOCKED”). Three cam-operated contacts (2 normally closed, one open) are provided on the SL-25 for line control. Also, the unit indicates the position of the magnet armature.

SL-25 switch locks may be ordered with an emergency key release unit, either a Yale or Switchman’s key types. A latchout feature is also available; this feature places the contacts in their most restrictive indication if an emergency key is used. Locks suitable for tandem applications can also be ordered.

Adjustable lever lock rods (see ***RSE-6H2***) are available for the SL-25 Switch Lock. These rods simplify switch lock the application to the T-20/T-21 switch machines.

Advantages

- Low style locks for space-restricted installations
- Single and tandem applications

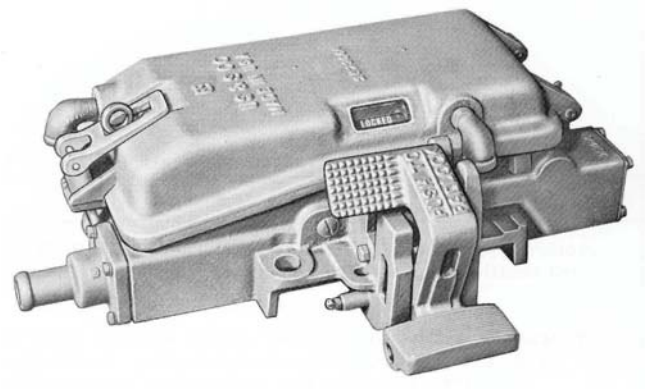

Ordering Information

- SL-25 with normal contact arrangement and no key release shown in ordering tabulation.
- When placing order, indicate the type of switch stand used in the installation.
- Contact your US&S Account Executive to order key accommodations.
- Refer to ***RSE-6H2*** for adjustable lever lock rods.
- Request US&S Service Manual SM-5466 for replacement parts.

Unit Dimensions

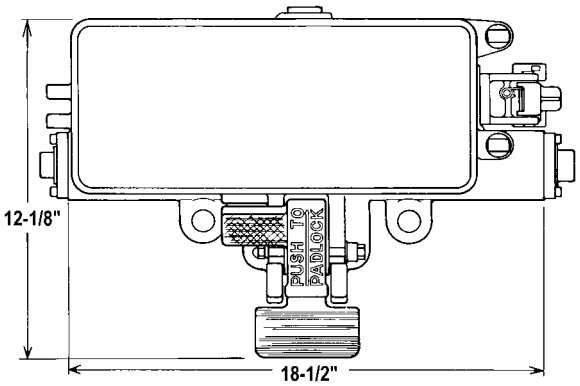

	SL-25
US&S Order No.	
N269804	SL-25 Electric Switch Lock

See reverse side for typical layout.

UNION SWITCH & SIGNAL

SL-25 Electric Switch Lock

RSE-6G3
Rev. 7-03

Typical SL-25 Electric Switch Lock Layout

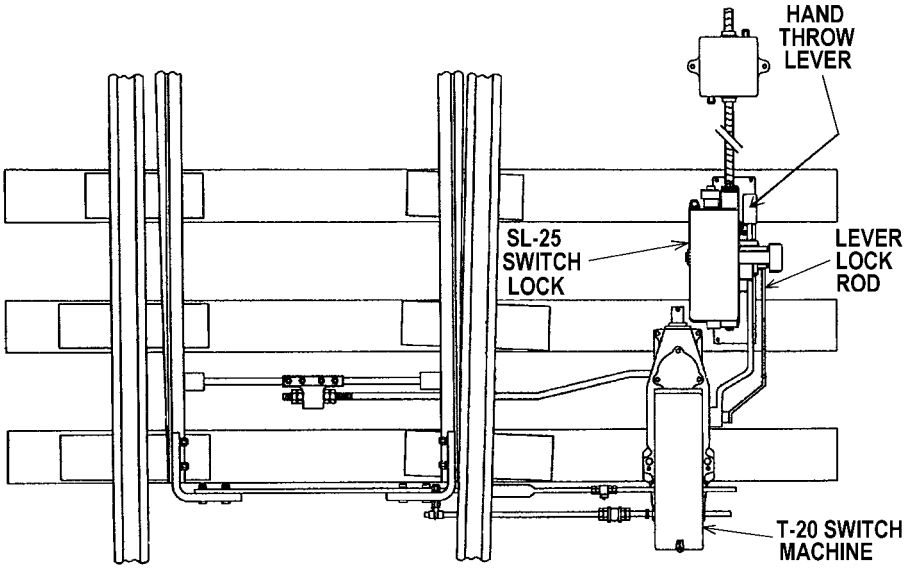

UNION SWITCH & SIGNAL

RSE-6H1
Rev. 7-03

Circuit Controller Operating Rods and Point Detector Lugs for Switch Circuit Controllers

General Description

Circuit controller operating rods connect the controller directly to a switch point. Connections can be made to the near or far switch points. Two types of rods are available:

- With spring type ball socket for circuit controller connection and ball clamp for switch point connection
- With spring type ball socket for both connections.

The ball sockets are self-adjusting. Lost motion in the connections is automatically taken up by the spring, which has ample strength to operate the circuit controller. The ball connection is captive and cannot escape from the socket even if the spring should break. A grease fitting on the spring ball socket connection enables forced lubrication. All rods incorporate a thread with rounded roots to withstand severe vibrations over an extended period. Ball type point detector lugs are recommended for these rods; these listed in ***RSE-6H4***.

Ordering Information

- Refer to ordering tabulation on reverse side for Circuit Controller Operating Rods and Point Detector Lugs part numbers.
- When ordering rods, specify connection to near or far switch point (see diagram below).
- Specify spring ball socket on one end of rod, or both ends.
- Please note unit dimensions in diagram for proper installation.
- When ordering point detector lugs, refer to dimension ‘Z” in diagram below. This is the same as the “Z” dimension in the second ordering tabulation.
- Note on above: Bolt holes are slotted, so there is some allowance for play.
- Specify the required “Z” dimension and bolt size for the point detector lug.

CC Operating Rod Installation

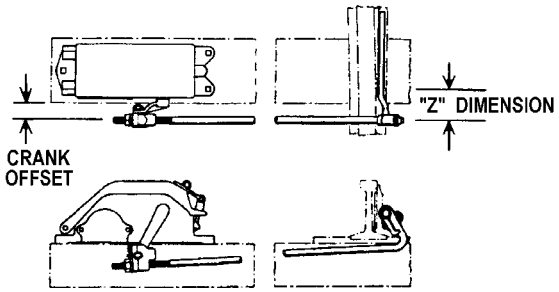

APPLICATION OF SWITCH CIRCUIT CONTROLLER TO NEAR SWITCH POINT

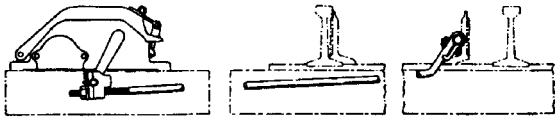

APPLICATION OF SWITCH CIRCUIT CONTROLLER TO FAR SWITCH POINT

Operating Rods

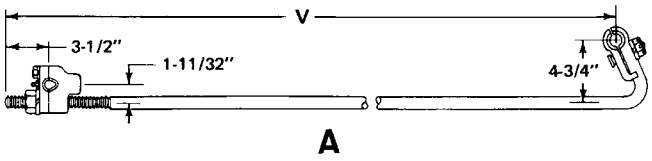

A

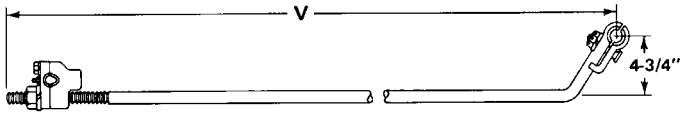

B

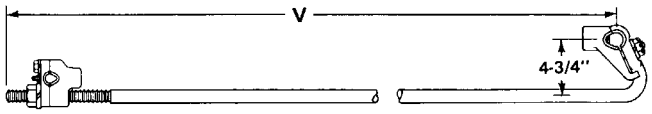

C

REF.	V DIM.
A	2' 3-1/4"
A1	2' 9-1/2"
A2	3' 10-1/2"
B	7' 11-1/2"
C	3' 10-1/2"

UNION SWITCH & SIGNAL

RSE-6H1
Rev. 7-03

Circuit Controller Operating Rods and Point Detector Lugs for Switch Circuit Controllers

Point Detector Lug

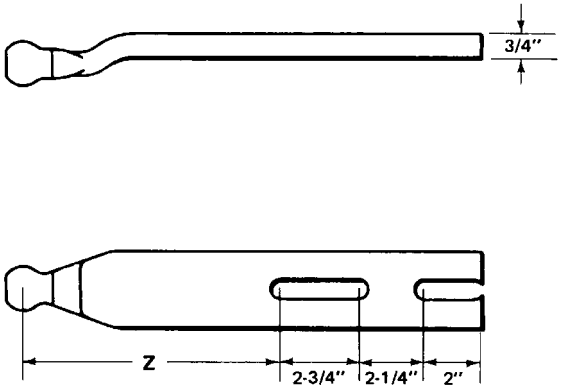

REF.	Z DIM.
A	5"
A1	7"
A2	9"
A3	5"
A4	7"
A5	9"

	Circuit Controller Operating Rods		
US&S Order No.	End Conn. (1)	Dimension "V"	Dwg. Ref.
N237118	Spring, Ball	2', 3-1/4"	A
N221255	Spring, Ball	2', 9-1/2"	A1
N224218	Spring, Ball	3', 10-1/2"	A2
N225193	Spring, Ball	7', 11-1/2"	B
N224456	Spring, Spring	3', 10-1/2"	C
	Note (1): Ends of rod: "Spring" - spring type ball socket. "Ball" - ball clamp.		

	Circuit Controller Operating Rods - Pt. Det. Lugs	
US&S Order No.	Bolt Applic.	Dimension "Z"
M346588	3/4"	5"
M346589	3/4"	7"
M346590	3/4"	9"
M346591	1"	5"
M346592	1"	7"
M346593	1"	9"

UNION SWITCH & SIGNAL

RSE-6H2
Rev. 7-03

Switch Lock Lever Lock Rods

General Description

US&S' Switch Lock Lever Lock Rods enable SL-21A and SL-25 electric switch locks to be applied to T-20/T-21 hand-operated switch machines, and standard railroad switch stands. These 2-piece, durable steel rods incorporate a threaded center joint (with lock nut) that allows fine adjustment of rod length in or out from various nominal lengths. Different offset dimensions are also available. Refer to the ordering tabulation for complete design and dimensional options.

Ordering Information

- Refer to ordering tabulation for part numbers of Switch Lock Lever Lock Rods

Lever Lock Rod Application Dimensions

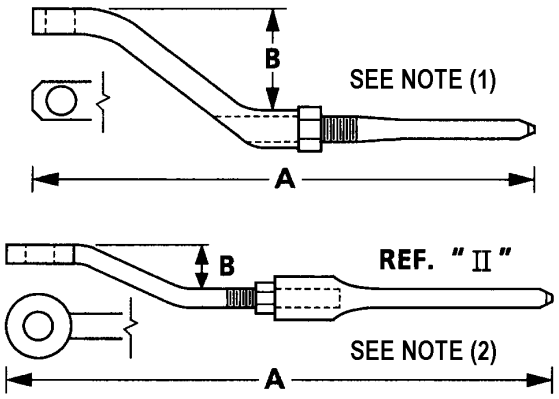

	Switch Lock Lever Lock Rods				
US&S Order No.	Dimension "A"	Max.	Min.	Dimension "B"	Notes
N295293	24-1/2"	25-3/16"	23-7/8"	4-1/6"	(1)
N295291	14-1/2"	15-3/16"	13-7/8"	4-1/6"	(1)
N309211	24-1/2"	25-3/16"	23-7/8"	2-9/16"	(1)
N313979002	10-15/16"	11-3/8"	10-1/2"	1-5/8"	(2)
N313979005	12-15/16"	12-3/4"	11-7/8"	3/4"	(2)
	Note (1): For SL-21A Switch Locks on std. hand-throw switch stands. Note (2): For SL-21A Switch Locks on T-20/T-21 Switch Machines.				

UNION SWITCH & SIGNAL

UNION SWITCH & SIGNAL

RSE-6H3
Rev. 7-03

Switch Point Roller Bearing Assemblies

General Description

US&S' switch roller bearing assembly is a simple, inexpensive device that greatly reduces friction between the switch points and the supporting surfaces. Installed in sets, the bearings reduce the load on the switch machine and allow the machine to apply force in a smooth, uniform manner. This helps to extend machine operating life. These roller bearings can be used on mechanically operated switches, switch springs with mechanical facing point lock, and outlying power-operated switches. Models are available to suit different rail sizes. The bearing used is a high quality Timken unit (tapered type) that is fully sealed against moisture and debris.

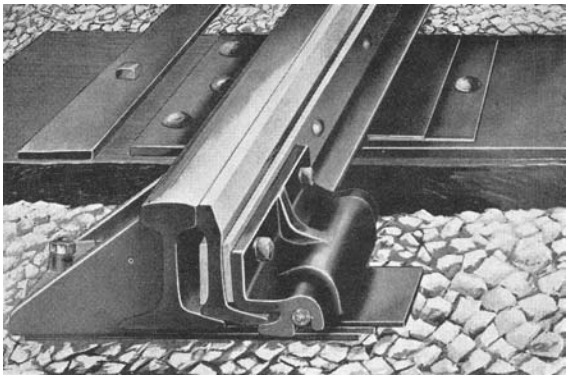

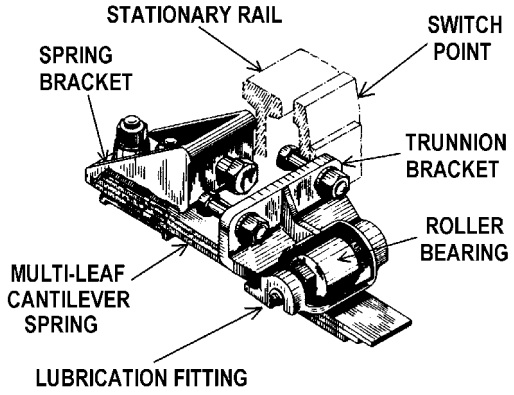

Ordering Information

- Refer to ordering tabulation for part numbers of Switch Point Roller Bearing Assemblies.
- Select assembly per rail weight and reinforcing bar thickness ranges, and specify the required quantity.
- Note: Order number X231923-002 includes two roller bearing assemblies.
- Contact your US&S Account Executive to order customized assemblies.

	Switch Point Roller Bearing Assemblies			
US&S Order No.	Rail Applications			Notes
X231923001	112# R.E. 112# H.F. 115# R.E. 119# C.F.& I 127# Dudley	139# T.R. 130# R.E. 130# H.F. 131# R.E. 132# R.E.	132# H.F. 133# R.E. 136# C.F.& I 140# P.S.	(1) (1) (1) (1) (1)
X231923002	112# R.E. 112# H.F. 115# R.E. 119# C.F.& I 127# Dudley	129# T.R. 130# R.E. 130# H.F. 131# R.E. 132# R.E.	132# H.F. 133# R.E. 136# C.F.& I 140# P.S.	(2) (2) (2) (2)
	General Note: Order only when using Cal-Rod switch heaters. Note (1): One assembly for 1/2" to 1-1/4" reinforcing bar on gage side. Note (2): Two assemblies for 1/2" to 1-1/4" reinforcing bar on gage side.			

See reverse side for typical roller bearing installation.

UNION SWITCH & SIGNAL

RSE-6H3
Rev. 7-03

Switch Point Roller Bearing Assemblies

Typical switch point roller bearing installation.

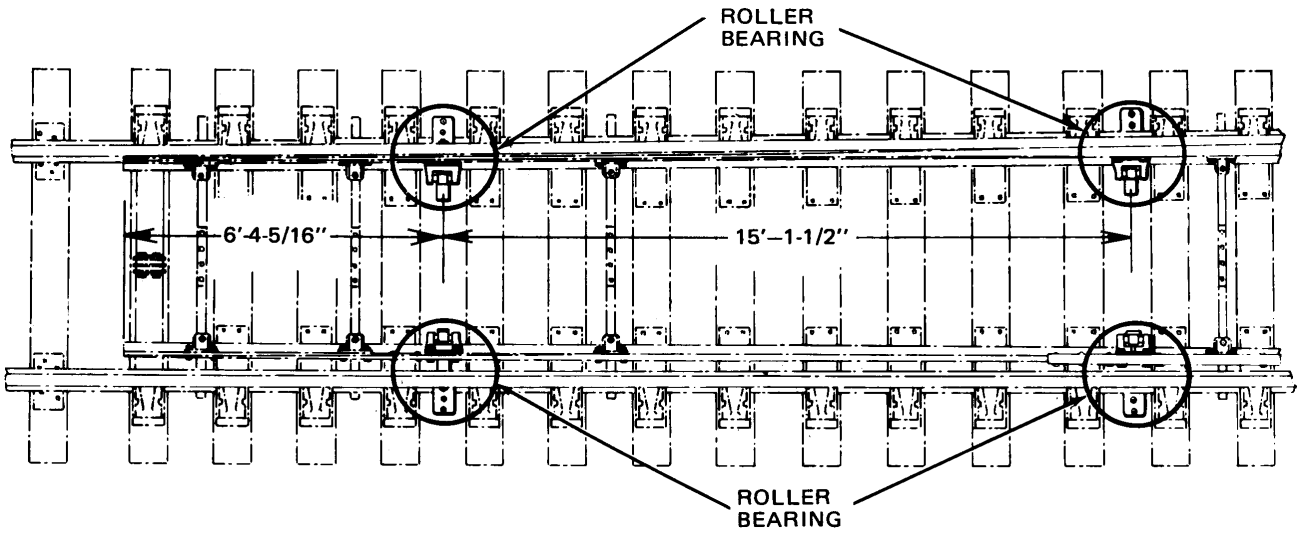

UNION SWITCH & SIGNAL

RSE-6H4
Rev. 7-03

Swivel Front Rods and Swivel Point Lugs

General Description

US&S' Swivel Front Rods are designed as rugged, long-lasting alternatives to conventional rigid front rods. While providing a connection of great strength between the switch points, the unique swivel design permits the movement necessary to limit strain or prevent breakage of the connection resulting from stagger in switch point position. The design allows a swivel action in the horizontal plane at each end while, at the same time, providing the desired rigidity in the vertical plane for support of the switch point.

In these assemblies, the front bar is insulated at the lock rod connection lug. Its length is adjustable in 1/8" steps, providing a wide range of lengths to accommodate the various thick-nesses of reinforcing bars and the various switch point openings typically encountered. The rods are made from high strength steel and may be employed in switch layouts having a distance between inside faces of point reinforcing bars of 4', 3-1/2" (max.) to 3', 11-1/8" (min.).

The swivel point lugs provide a secure link between the swivel front rod and the switch track, and are actuated by a connecting rod. Two types are available. One is supplied with a ball tip for mating with a point detector connecting rod. The other is furnished with a plain end. The lugs are symmetrical about the switch point bolt holes, thus they can be interchanged. Since the lock rod connection may be run from either side to the bracket lug, the same front rod parts are used at right-hand and left-hand layouts.

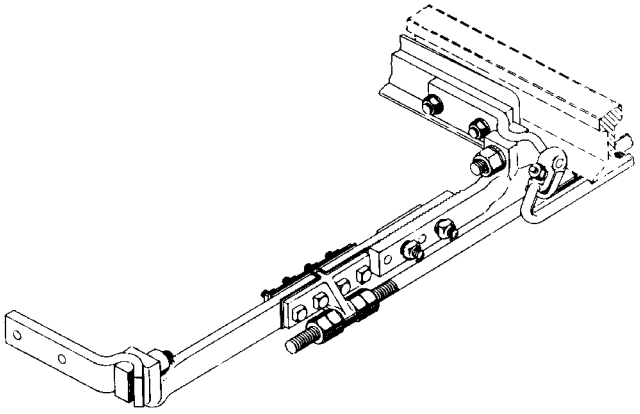

Swivel Front Rod

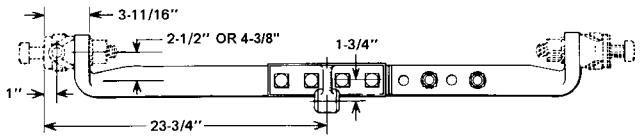

Swivel Point Lug with Ball End

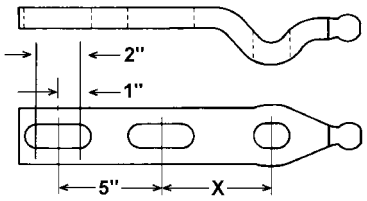

Swivel Point Lug without Ball End

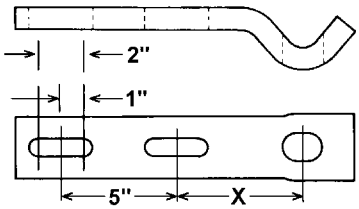

Pin Bolt



Ordering Information

- Refer to ordering tabulation on reverse side for part numbers of Swivel Front Rods and Swivel Point Lugs.
- Make certain to order rods and lugs per required dimensions.

UNION SWITCH & SIGNAL

RSE-6H4
Rev. 7-03

Swivel Front Rods and Swivel Point Lugs

	Swivel Front Rods	
US&S Order No.	Downset	1-3/4" Drop
N229002	1-3/4"	--
N303520	4-3/8"	Without
N4513871501	4-3/8"	With

	Swivel Point Lugs		
US&S Order No.	Dimension "X"	Bolt Appli.	End
M286016	4-1/2"	1"	Ball
M297146	5-1/2"	1"	Ball
M309848001	4-3/4"	3/4"	Ball
M293573	6-3/8"	1"	Ball
M257124	5-1/2"	3/4"	Ball
M257125	5-1/2"	3/4"	Plain
M284293	6-3/4"	3/4"	Plain
M284294	6-3/8"	1"	Plain
M280484	4-3/4"	3/4"	Plain
M283081	5-1/2"	1"	Plain
M286840	4-1/2"	1"	Plain
M373959	6-3/4"	3/4"	Ball

	Pin Bolts		
US&S Order No.			
M304192	3/4" x 5-1/4"	M312567	1" x 4-3/4"
M304193	3/4" x 4-1/4"	M393550	1" x 5-1/2"

Switch Machine and Switch Layout Tools

US&S offers a complete line of generic and special-purpose tools to expedite repairs and adjustment of switch machines and associated switch point hardware. US&S engineers have carefully chosen the complete range of tools to cover every possible repair and calibration need at the switch machine installation. Many these tools are provided in several types of toolset kits and can be used to service US&S switch machines such as the M-3, M-23 or YM-2000, as well as non-US&S machines.

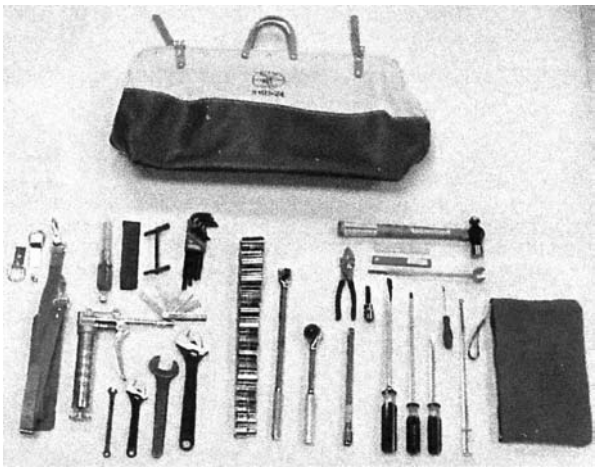

General Description

Basic Switch Machine Tool Kit (X49125301)

This kit is provided for essential switch machine repair tasks such as component repair/removal, motor service, gear box maintenance, cover replacement, etc. Tools contained in this kit include:

- 2” Drive Chrome Ratchet - 10” long
- 15-3/4” Breaker Bar
- 10” long Ratchet Extension
- 3/8” x 3-1/4” Long Hex Bit
- 1/2” Drive Socket Set
- Screwdriver - WAGO Narrow Blade
- 1/4” Slotted Screwdriver, 6” long
- 1/2” Slotted Screwdriver, 10” long
- #2 Phillips Screwdriver, 10” long
- Crescent Wrench, 6” long - 15/16” max
- Crescent Wrench, 10” long – 1-5/16” max
- Combination Wrench - 5/16”
- Thin Head Wrench, 1-1/8”
- Hex Key Set, L-Shaped, 13 pc.
- Retriever - Flexible 13-1/2” long
- Feeler Gages – 25-pc set
- Ball Peen Hammer, 12 oz.

Basic Switch Machine Tool Kit (X49125301, cont’d)

- Grease Gun, Mini 3-1/2” Cartridges
- Seater - Brush & Handle (Motor Commutator)
- Terminal Wrench
- Switch Obstruction Gage
- Point Detector Gage
- Canvas Tool Bag
- Strap for Canvas Tool Bag
- Leather Accessory Bag

Basic Switch Machine Tool Kit with Track Wrench Set (X49125302)

This kit combines Basic Tool Kit X49125301 with two different types of “Track Wrenches”. These wrenches are used for point detector and lock rod adjustments. Kit items include:

- All items in kit X49125301 above, plus:
- Switch Adjusting Wrench, 2-1/16”
- Switch Adjusting Wrench, 1-5/16” to 1-11/16”

UNION SWITCH & SIGNAL

RSE-6J1
Rev. 7-03

Switch Machine and Switch Layout Tools

Basic Switch Machine Tool Kit, Track Wrench Set and Mechanical Circuit Controller Adjusting Tools (X49125303)

This kit adds to the X49125302 above with set of circuit controller adjustment tools. Items in this kit include:

- All items in kit X49125302 above, plus:
- 0 -to 12 lb. Spring Scale
- 0 to 6 lb. Spring Scale
- Spring Bender ("T" handle)
- Spring Benders
- Spring Tension Gage 0 to 5 lb.

Mechanical Circuit Controller Adjustment Tool Kit (X49125304)

Tools contained in this kit are used for switch machine mechanical circuit controller adjustments such as setting contact pressure and air gaps. Items in this kit include:

- 0 -to 12 lb. Spring Scale
- 0 to 6 lb. Spring Scale
- Spring Bender ("T" handle)
- Spring Benders
- Spring Tension Gage 0 to 5 lb.

Track Wrench Set (X49125305)

Track wrenches are used for point detector and lock rod adjustments. Kit items include:

- Switch Adjusting Wrench, 2-1/16"
- Switch Adjusting Wrench, 1-5/16" to 1-11/16"

Close-Clearance Wrench for Swivel Front Rod Assemblies (J49124401)

This US&S custom-designed tool allows the maintainer to turn swivel front rod and basket nuts that are positioned close to the ties and cannot be turned with conventional open-end or box-end wrenches.

Ordering Information

- Refer to ordering tabulation for tool and tool kit part numbers.

	Switch Machine and Layout Tools & Tool Kits (1)
US&S Order No.	
X49125301	Basic Switch Machine Tool Kit
X49125302	Basic Switch Machine Tool Kit with Track Wrench Set
X49125303	Basic Switch Machine Tool Kit, Track Wrench Set and Mechanical Circuit Controller Adjusting Tools
X49125304	Mechanical Circuit Controller Adjustment Tool Kit
X49125305	Track Wrench Set
J49124401	Close Clearance Wrench for Swivel Front Rod Assemblies
	Note (1): See description for list of tools contained in kits

UNION SWITCH & SIGNAL

RSE-6K1
Rev. 7-03

Pedestal-Mounted Junction Boxes

General Description

Pedestal-mounted junction boxes are typically used at switch machine locations as a central termination point for under-ground cables. Terminal blocks, variable resistors, fuse holders and related components are mounted in these boxes. Each pedestal contains a side entrance, located near the bottom of the riser, for the parkway cable. Because the pedestal is placed directly in the ground, no concrete foundation is required. The pedestal junction boxes can accommodate from four to 48 AREMA terminals (#14-24) molded in blocks of Bakelite insulation. Terminal nuts are positioned for easy access by a socket wrench. Knockouts for steel or flexible hose conduits or multi-conductor fittings are provided on opposite sides of the boxes. Other design features include:

- Larger boxes (12-24 terminals) contain two elbow ventilators with fine wire mesh screens for air circulation and elimination of condensation. These boxes also have well underneath terminal compartment for pot-heading and sealing of incoming cables.
- Sealed cover joints and outside cover bolts provide weather protection.
- All exposed bolts, nuts and washers cad-plated to resist rust.
- Side and bottom openings protect incoming underground cables



Advantages

- Ideal for underground cable termination
- Numerous optional attachments
- Direct ground installation - no foundation needed

Ordering Information

- Refer to ordering tabulation on reverse side for commonly-used pedestal junction boxes and special fittings.
- Contact your US&S Account Executive to order special boxes and standard fittings.

Order Ref. A

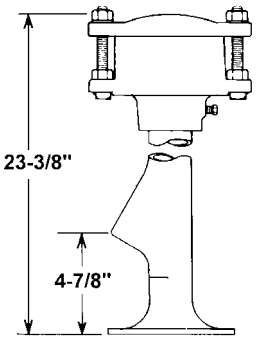

Order Ref. B

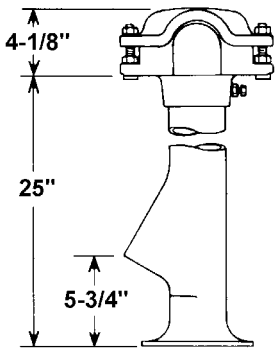

Order Ref. C

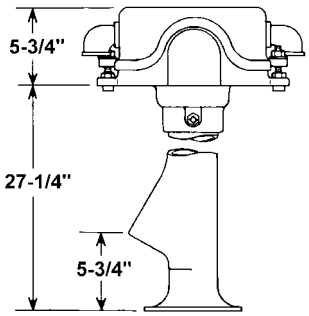

Order Ref. D

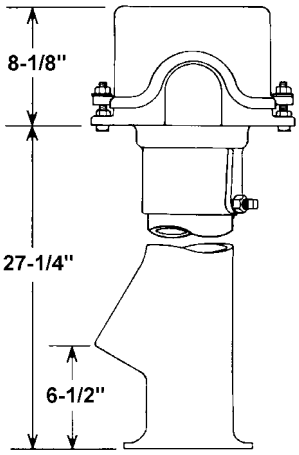

UNION SWITCH & SIGNAL

Pedestal-Mounted Junction Boxes

RSE-6K1
Rev. 7-03

	Pedestal-Mounted Junction Boxes			
US&S Order No.	Dwg. Ref.	Terminals	Pipe Plug	Connectors
N386513	A	4	--	Note (1)
N393981	A	4	X	Note (2)
N376937	B	4	--	--
N376941	B	10	--	--
N374992	C	12	--	--
N374993	C	24	--	--
N349656	D	48	--	--
	Note (1): Two connectors for 1/2" x 5/8" O.D. cable. Note (2): One connector for 3/8" x 1/2" O.D. cable.			



Signals and Associated Equipment

- H-2 Searchlight Signals
- N-2 and N-2S Color Light Dwarf Signals
- ES-20 Color Light Electric Switch Signal
- CR-2 Triangular Color Light Signal
- PL-8 Color Position Light Signal
- Multi-Purpose Color Light Signals
- Transit Signals
- Inclined Cover Glass Assemblies, Phankills Units and Roundels
- Signal Lamps
- Mainline Signal Assemblies

UNION SWITCH & SIGNAL

H-2 Searchlight Signals

The highly dependable H-2 Searchlight Signal provides dependable service in a variety of applications. It is available for both high mast and dwarf applications, and is designed to produce a concentrated light beam for long range indications on tangent or small curvature track. This signal is compact, rugged, lightweight and easily accessed for routine maintenance. The H-2 also requires low level operating power, but provides a brilliant aspect image because of its precision optics. It can be used for ground or bridge applications.



General Description

The H-2 Searchlight Signal assembly consists of an aluminum case that houses an operative or inoperative signal unit and objective lens assembly. Adjustable mounting brackets are available for front or side-of-mast mounting of the case. The case can also be equipped with a lens hood and background. Cabling to the signal can be routed through a 45° or 90° street ell in the base. A built-in sight is provided for unit field alignment. The operative or inoperative signal unit is accurately positioned inside the case with a fixed pin and two bolts.

The operative signal unit used in the H-2 displays three color indications. External electrical connections are made on AREMA terminals below the lamp unit. A plug coupler can be provided on these terminals for quick disconnection of wiring. A variable resistor (optional) allows adjustment of lamp intensity. Optical elements of the H-2 include:

- Piano-convex objective lens.
- Polished elliptical reflector greatly amplifies lamp. (Note: Highly durable Nickel-Rhodium metal reflectors are available as direct replacements for glass reflectors (refocusing required after installation).

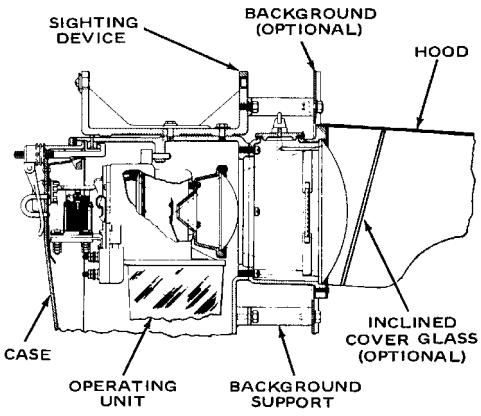

- Lenses made of specially developed heat-resistant glass; accurately ground and polished.
- Options:
  - Close-up prism for extended visibility to train crew (all incorporate 25o deflecting prisim).
  - Spreadlight roundels for indications on sharp and reverse track curves.
  - Deflection roundels for typical curves.
  - Inclined cover glass assemblies for deflection and diffusion on special track curvature or geographic conditions (refer to ***RSE-7H1***).
  - Phankill for reduction of phantom indications.

Advantages

- Presents all aspects through a single lens
- Low power operation, but visible over great distances
- Adjustable mounting bracket with built-in aiming site
- 3-aspect or single aspect models
- High (mast) and dwarf versions

UNION SWITCH & SIGNAL

H-2 Searchlight Signals

RSE-7A1
Rev. 7-03

Ordering Information

- Refer to ordering tabulation below for common-use H-2 signals and key components.
- Contact your US&S Account Executive to order customized signal units and mounting hardware for backgrounds.
- Refer to ***RSE-7H1*** to order inclined cover glass and Phankill Screen.
- Refer to ***RSE-7J1*** for signal lamps.
- Refer to ***RSE-7K1*** for general information on mainline mast assemblies.
- Request US&S Service Manual 5034 for replacement parts and addition case design options.

H-2 High Signal Case Assy.

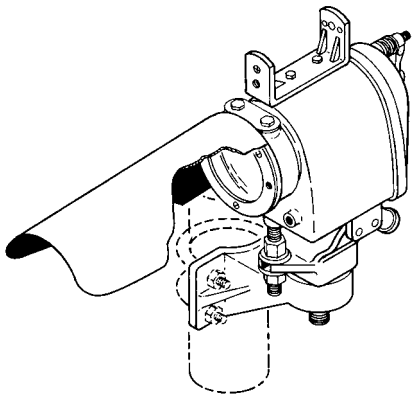

H-2 Operating Unit



H-2 Inoperative Unit



	H-2 Signal Cases (1)					
US&S Order No.	Type	Streel Ell	Jake Jake Conn.	Std. Hood	Adjust. Bracket	Notes
N4513530601	High	2", 45 deg.	--	--	Side or front of mast (at top)	--
N4513530602	High	2", 90 deg.	--	--	Side or front of mast	-- --
N4513530809	Dwarf (Single)	1-1/2", 90 deg.	X	X	--	(2)
N4513531101	Dwarf (Double)	1-1/2", 90 deg.	X	X	--	(2)
N4513531106	Dwarf (Double)	2", 90 deg.	X	X	--	(2)
N4513531111	Dwarf (Double)	1-1/2", 90 deg.	X	X	--	(2) (3)
	Note (1): Request US&S Service Manual SM-5043 for additional case designs. Note (2): Operating Unit not included. Note (3): Includes Phankill unit.					

	H-2 Signal Units - Operative and Inoperative					
US&S Order No.	Type	Left Roundel	Middle Roundel	Right Roundel	Coil Volt./ Ohm	Plug Coupler
N290148	Operative	Yellow	Red	Green	5.5/250	X
N294167	Operative	Yellow	Red	Green	5.5/250	--
N169545	Inoperative	Red Roundel				

	H-2 Backgrounds and Outside Lens
US&S Order No.	
M144459	Standard 35" diameter
M244246	20" diameter
J053746	8-1/2" Clean Outside Lens (Non-Inclined)

N-2 and N-2S Color Light Dwarf Signals

General Description

The N-2 signal is intended primarily for classification yards, but may be adapted for any application where a dwarf signal is required. This signal is a completely weather-proof, ruggedly built cast iron unit that will provide many years of efficient, trouble-free service. It is dc-powered, available in 2 and 3-color configurations and is designed for mounting on a concrete foundation.

The N-2S signal is a 1-color unit with an optical assembly consisting of a single-lens light unit with a 5' diameter. This unit incorporates a glass lens.

All N-2 and N-2S units are housed in a weather-proof cast-iron case with hinged rear cover. The cover design allows complete access to the lamp equipment for servicing. A hasp on the cover permits the unit to be padlocked. Screened ventilators are built into the door to enhance air circulation and prevent condensation. An optional, 1-1/2" x 1-1/4" reducing street ell can be installed in the base of the unit as a cable entrance.

The basic N-2/N-2S optical assembly can be easily removed as a unit from the front of the case. A lamp unit, with attached terminals, is accurately located so that the lamp filament is at the focal center of the lens system. Both single contact or special bayonet-base lamps may be used in the assembly. The doublet lens system (colored back and clear front converging) represents a combination of two special stepped lenses that give a wide angle of diversion to the light beam. The converging front lens can be replaced with an optional 10° or 30° (typical) spreadlight lens. A plastic converging front lens is also available. All N-2 and N-2S signal units are equipped with prisms that deflect the light beam upward. Phankill units (optional) may also be installed on these signals.



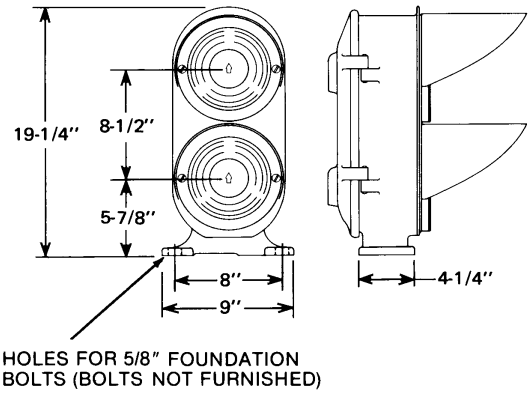

Advantages

- Ideal for classification yards; other applications
- Numerous configurations
- Fully weatherproofed

Ordering Information

- Refer to ordering tabulation below for N-2 signal part numbers.
- Contact your US&S Acount Executive to order N-2S signals.
- Select among the following options (if required):
  - 10° or 30° spread light front lens.
  - Plastic or glass converging lens.
  - Phankill unit.
  - Street ell for cabling
- Contact your US&S Acount Executive to order special signal configurations.
- Refer to ***RSE-7J1*** for signal lamps.

	N-2 Signals: 2-Color	
US&S Order No.	Lens Order	Lamp Base
N120721	Y, R	Bayonet
N126110	Y, R	Candelabra

UNION SWITCH & SIGNAL

UNION SWITCH & SIGNAL

RSE-7C1
Rev. 7-03

ES-20 Color Light Electric Switch Signal

General Description

The US&S ES-20 Color Light Electric Switch Signal is typically used for indicating the position of power-operated switches at classification and car storage yards. However, its design permits use as a light repeater of switch position wherever electric energy is available for lighting purposes. The signal's weatherproof contains a lens doublet in each of four openings; a lamp unit is placed at the focal point between each set of doublets. Each of the doublets consists of a clear lens and a colored spreader glass for horizontal spread in each direction. A wire screen is located between the clear lens and the spreader glass to protect against phantom indications.

Wingnut locking devices are used to secure the unit's top cover. This allows easy removal for access to internal components such as lamps and terminals. A hinged hasp is available on some models to permit pad locking of the cover. Some ES-20 units are shipped with two or three blanking plates to replace selected lens sets. An integral mounting base allows quick and easy mounting of the unit. All ES-20 models are equipped with lens hoods.



Advantages

- Power switch position indication or light repeater
- Front/back indication

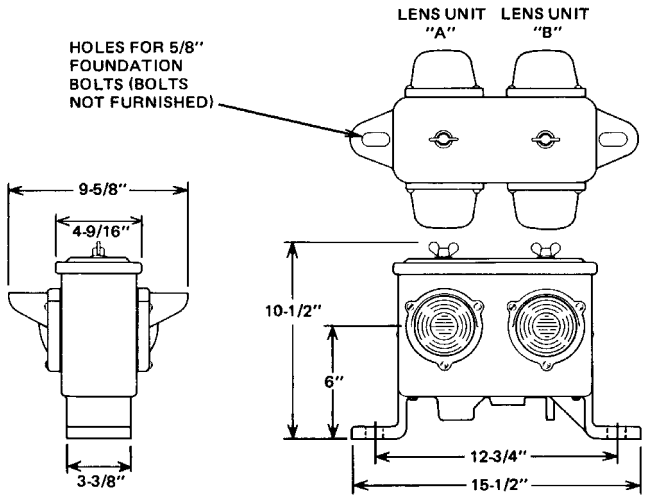

Ordering Information

- Refer to ordering tabulation below for ES-20 signal assembly part numbers.
- Contact your US&S Account Executive to order special ES-20 signal configurations.
- Refer to ***RSE-7J1*** to order signal lamps.
- Request US&S Service Manual SM-6334 for replacement parts.

	ES-20 Switch Signals	
US&S Order No.	Lens A	Lens B
N4513510202	Green	Red
N4513510204	Red	Yellow
N4513510206	Green	Yellow
N4513510216	Blue	Yellow

UNION SWITCH & SIGNAL

CR-2 Triangular Color Light Signal

US&S' CR-2 signal satisfies railroad industry demands for low cost, easy service 3-aspect color light signals. The latest improvements in optics, mechanical and electrical assemblies are employed.

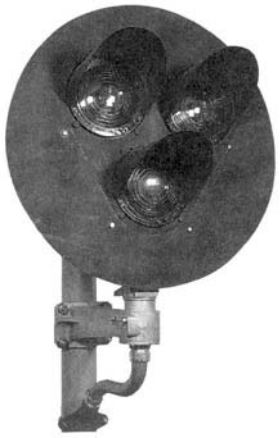

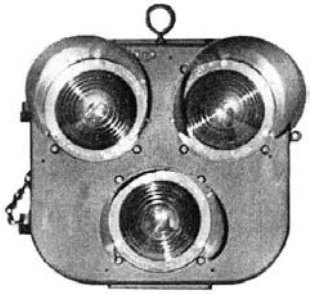

General Description

Three light units are contained in a square (rounded corner) housing with factory aligned low wattage lamps. Each light unit is externally shielded with a clear, high-impact Lexan® lens (8 3/8"), while color is generated through a 5" interior lens. The bulb type is a standard single contact bayonet base. Anti-phantom screens are available to prevent generation of false aspects. The total lamp/lens configuration is designed to produce a brilliant image at long range in bright sunlight or poor visibility.

Adjustable transformers and resistors can be ordered to calibrate lamp power and brilliance. A US&S K-10 5-way terminal strip (AREMA type) is available for 5-wire installations, while a second K-10 strip is provided to terminate spare wires.

Housing construction uses heavy duty cast aluminum for long term durability, corrosion protection and resistance to vandalism. All light units are accessed through a single, lockable and ventilated rear door with a weathertight seal.

Grease fittings are provided on the door hinges to prevent jamming from rust. Hoods (10") and large diameter (36") backgrounds are attached to the housing with standard hex head cap screws; this allows mounting and removal with standard wrenches or sockets. (A standard cap screw is also used to secure the housing access door). To help maintainers take electrical measurements, a hook is provided in the lamp unit housing to hold a portable meter.

The CR-2 Triangular Color Light is easily handled at the installation site, thanks to a heavy duty lifting eye with a large, 2" hole. Signal head mounting is fully interchangeable with a Safetran bracket. The mounting permits accurate pointing in the horizontal and vertical planes, with the aid of a built-in sight.

Advantages

- Vivid aspects in all ambient conditions
- Rear access lens/hood unit for simple handling and maintenance
- Numerous color aspect options for all applications
- Single maintenance access door

Ordering Information

- Refer to ordering tabulation for CR-2 signal part numbers.
- Contact your US&S Account Executive to order:
  - Special color aspects or electrical provisions.
  - Mast mounting brackets and hardware
  - Replacement parts.
- Refer to ***RSE-7J1*** for signal lamps.

See reverse side for unit design and dimensions.

UNION SWITCH & SIGNAL

CR-2 Triangular Color Light Signals

RSE-7D1
Rev. 7-03

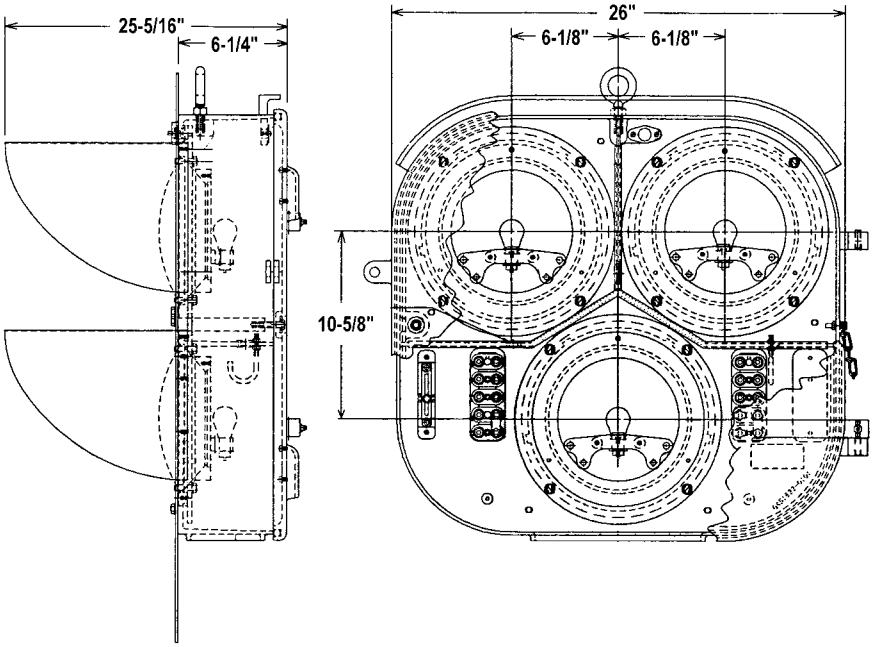

	CR-2 Signal Heads and Heads with 36" Backgrounds				
US&S Order No.	Signal Head	Background (36")	Bottom Lens	Top Left Lens	Top Right Lens
N4518980101	X	--	Red	Yellow	Green
N4518980103	X	--	Red	(Blank)	(Blank)
N4518980105	X	--	Red	(Blank)	Green
N4518980107	X	--	Red	Yellow	(Blank)
X4518980102	X	X	Red	Yellow	Green
X4518980104	X	X	Red	(Blank)	(Blank)
X4518980106	X	X	Red	(Blank)	Green
X4518980108	X	X	Red	Yellow	(Blank)

	Replacement Backgrounds and Hoods
US&S Order No.	
M4518990801	36" Sheet Aluminum Background
M4518990802	36" Composite Material Background
M4519162001	Sheet Aluminum Lens Hood
M4519162002	Composite Material Lens Hood

UNION SWITCH & SIGNAL

RSE-7E1
Rev. 7-03

PL-8 Color Position Light Signal

US&S' PL-8 Color Position Light Signal offers the best features of color and position light signals, allowing a railroad to select aspect configurations perfectly suited to its particular operating requirements and rules. Although the PL-8 is designed to house up to eight signal lamps in the familiar circular array, it can be augmented with additional marker lamps above and below the central array. As a result, the PL-8 can be configured to generate a highly refined series of aspects between stop and clear. The PL-8 is perfect for control of mainline trains on high traffic, close headway urban routes with numerous interlockings and passenger stations.



General Description

Constructed of light weight cast aluminum, the PL-8 Position Light Signal can be mounted on a standard concrete or steel foundation. Lamps in the circular array are easily accessible from the rear through a single detachable door. The door is secured by a lockable hasp on a central threaded stud. The signal's base is designed to incorporate an additional marker lamp when desired. The base also contains ten pairs of AREMA binding posts on US&S style K-10 terminal strips for external wiring. Up to six additional pairs of terminals can be added as required. Still more lamps can be installed on top of the housing, using a mounting cap designed to hold add-on marker lamp fixtures (see diagram below). All doors and cover plates on the PL-8 signal use durable neoprene seals for weatherproofing.

Each PL-8 signal lamp location contains a 3-1/2" glass lens, a colored flat 20° spreadlite roundel to improve visibility away from the central lamp axis, and an anti-phantom screen to prevent false lamp-on images. Standard color options include AREMA standard red, yellow, green, blue, and lunar white. Blanking plates are also available where illuminated aspects are not required. Individual hoods on all lamp locations are standard with all PL-8 signals.

The PL-8 signal uses 18W, 10V AAR standard signal lamps with SCBC bases. Lamps are precisely positioned on the focal axis for maximum illumination. If a lamp should burn out, the aspect can still be distinguished by color, though not by position.

Advantages

- Ideal for heavily traveled mainline routes
- Precise signaling for heavy rail passenger and freight traffic
- Dwarf design for tight mounting spaces
- Numerous aspect options
- Easily installed and serviced

Ordering Information

- Refer to ordering tabulation on reverse side for typical PL-8 signals and key components.
- To order other configurations, please specify:
  - Locations of lamps and/or blanking plates in circular array.
  - Colors of lamps in circular array.
  - Additional lamp color in base section, if required.
  - Locations and colors of add-on lamp units on top of main housing, if required.
  - Additional K-10 wiring terminals strips.
- Contact your US&S Account Executive for replacement parts.

UNION SWITCH & SIGNAL

PL-8 Color Position Light Signal

RSE-7E1
Rev. 7-03

Configurations

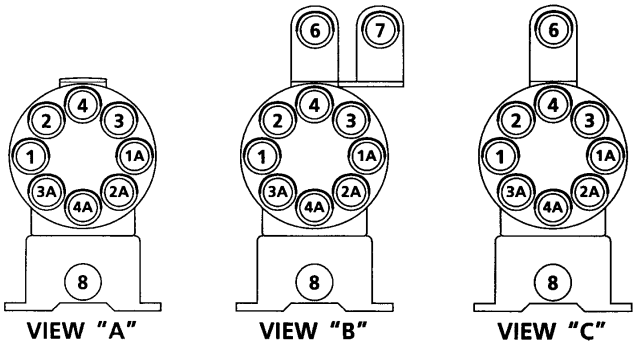

Unit Dimensions

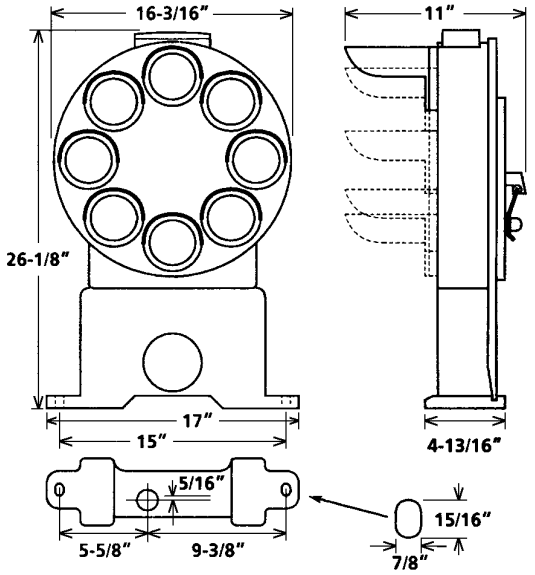

	PL-8 Assemblies and Roundels								
US&S Order No.	Dwg. View	1-1A	2-2A	3-3A	Aspects 4-4A	5	6	7	8
N4514490601	"A"	Red	L. White	Yellow	Green	--	--	--	Blank. Plate
N4514490603	"A"	Red	Blank. Plate	Yellow	Green	--	--	--	Blank. Plate
N4514490605	"B"	Red	L. White	Yellow	Green	--	Clear	Yellow	Blank. Plate
N4514490606	"C"	Red	L. White	Yellow	Green	--	Clear	--	Blank. Plate
N224372	Roundel - Red								
N224374	Roundel - Yellow								
N224376	Roundel - Green								

UNION SWITCH & SIGNAL

Multi-Purpose Color Light Signals

General Description

US&S' multi-purpose modular color light signals combine high quality construction with a highly adaptable design. These modular signals can be stacked with two, three or four signal units as required by the application. The individual signal units feature a large compartment for ease of access to electrical and optical components. Each compartment incorporates a door with a pad-locking hasp. Optics are factory pre-focused and utilize high-impact color lenses. Signal indications can be easily seen over long distances, even in bright daylight.

An anti-phantom screen is available for each lens assembly to prevent unwanted secondary reflections (contact US&S for this screen). The mainline signal assembly can be mounted on top of the mast, or on the front side with a special side-of-mast mounting bracket. An adapter sleeve is available to fit the signal to a 4" mast. The dwarf signal assembly can be ordered with a fixed angle of tilt up to 7 degrees.

Adjusters are provided on both the mainline and dwarf signals for all aiming angles, allowing fast and precise alignment in the field. Cast aluminum construction is used throughout to minimize weight and corrosion.



Advantages

- Excellent long range indication.
- Modular design
- Total adjustability for accurate field alignment

Specifications

Signal Unit Options:	Mainline and Dwarf: 1 to 4 units
Lens Color Options:	Mainline and Dwarf: Red, yellow, green, lunar white
Lens Arrangement:	High: 8-3/8" outer, 5-1/2" inner
Dwarf:	Doublet: 6-3/8" outer, 5-1/2" inner
Lamp Sockets:	Mainline and Dwarf: Standard single-contact, 2-pin bayonet
Top-of-Mast Mtg:	Mainline: For 5" masts (4" adapter available)
Side-of-Mast Mtg:	Mainline: For 5" masts; see tab.
Angle of Tilt:	Dwarf": 0 to 7 degrees
Unit Dimensions:	See illustrations.

High Signals

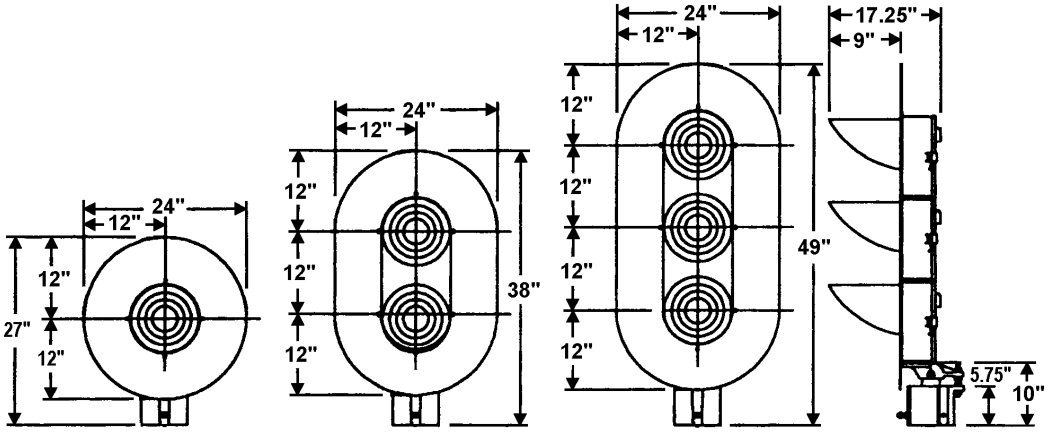

ANSALDO SIGNAL
A Finmeccanica Company

UNION SWITCH & SIGNAL

Multi-Purpose Color Light Signals

RSE-7F1
Rev. 7-03

Dwarf Signals

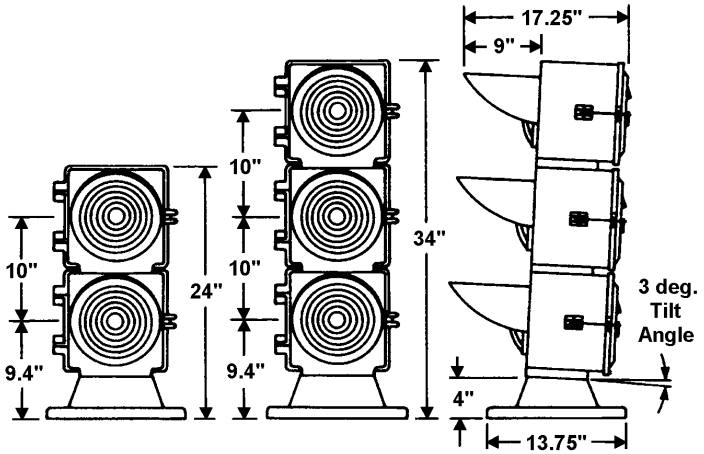

Ordering Information

- Refer to ordering tabulation for typical Multi-Purpose Color Light Signal part numbers.
- Contact your US&S Account Executive for special signal configurations not listed, and for replacement parts.

	Multi-Purpose Color Light Signals			
US&S Order No.	Type	Aspects (1)	Resistors	Transformers
N4519150173	Mainline	R	--	--
N4519153241	Mainline	R-Y	--	--
N4519151331	Mainline	R-G-Y	X	--
N4519151351	Mainline	R-G-Y	--	X
N4519151352	Mainline	G-R-Y	--	--
N4519151441	Mainline	R-G-Y-LW	--	--
N4519120221	Dwarf	R-LW	--	--
N4519120262	Dwarf	R-G	--	--
N4519120304	Dwarf	R-LW-Y	--	--
	Note (1): Top-to-bottom order of lamp colors.			

	Mounting Bases (Included with Signals)
US&S Order No.	
N4519160301	Swivel Base
N4519130502	Swivel Base, Ground Mounting

UNION SWITCH & SIGNAL

RSE-7G1
Rev. 7-03

Transit Signals

General Description

US&S offers several complete lines of color light signals suitable for use on all types of rapid transit and light rail lines. These signals are composed of 3-color and 1-color signal units that may be assembled in many different configurations. Some of the signal unit component options include:

- Choice of lens colors and arrangement
- Blanking plates (when required)
- Signals to display special characters or symbols
- Hoods
- Side and back indication lights
- Transformer or resistor lamp control
- Number plates

Signal heads are available with single 5” lenses or 6-3/8” doublet lenses. The 5” lens signals are typically used in subway installations where space is limited, while the 6-3/8” lens signals are for outdoor service. However, 6-3/8” signals should be used in underground installations when space permits. (Note: Signals with 5” lenses are readily available from US&S; contact your US&S Account Executive for complete ordering information.)

The 5” transit signals incorporate glass lenses only, in the standard signaling colors. Lamp receptacle options for these signals include dual medium screw base or dual single-contact bayonet candelabra base receptacles. The 6-3/8” signals may be ordered with glass or impact-resistant plastic lenses in all standard signaling colors. An inner 5-1/2” lens carries the desired color, while the 6-3/8” outer lens is clear. Lamp receptacle options for the 6-3/8” signal units include single or dual single-contact bayonet candelabra base or dual medium screw base receptacles.

Three-color and 1-color signal units are available in several versions, each housed in fully weatherproof aluminum cases with lockable rear doors. The signal units may be joined together in any desired configuration to display any desired aspect. The 3-color units are equipped with integral number plates that can be back-lit, if required. All signals may be equipped with roundels to display special characters or

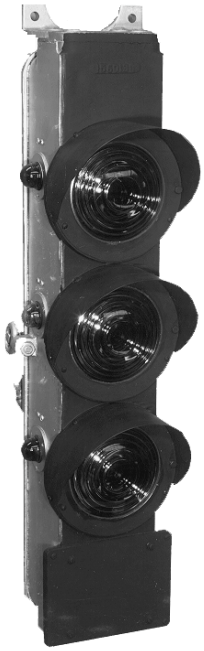

symbols such as arrows, bars or “T”. Transformers or resistors of various types can be mounted directly in the 6-3/8” lens signal cases. Hood lengths include 4”, 7-1/2” or 9”.

All US&S transit signals can be supplied with components for mounting to tunnel walls or ceiling. Or, they can be supplied with pipe posts, bases and ladders for stand-alone mounting. Bases for dwarf signal installations are also available.

Advantages

- Designed for all types of transit installations
- Numerous signal head and wayside assembly configurations
- High quality optics, easily serviced
- Full line of mountings to suit all locations

Ordering Information

- Contact your US&S Account Executive to order transit signals.

See reverse side for typical transit signal configurations.

UNION SWITCH & SIGNAL

Transit Signals

RSE-7G1
Rev. 7-03

Typical Wall-Mounted Signal

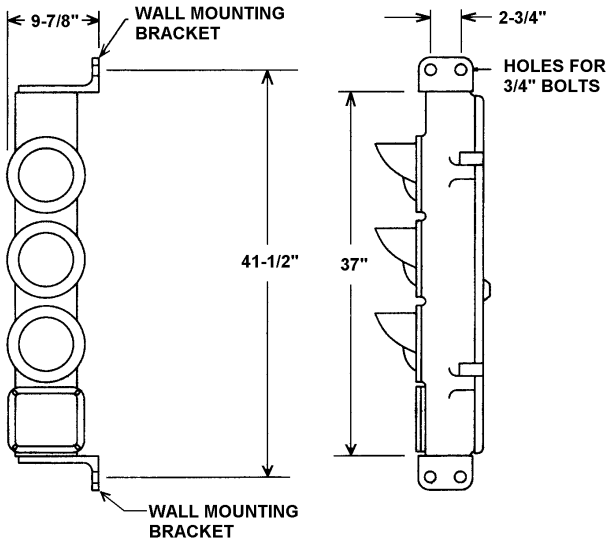

Typical Dwarf Signal

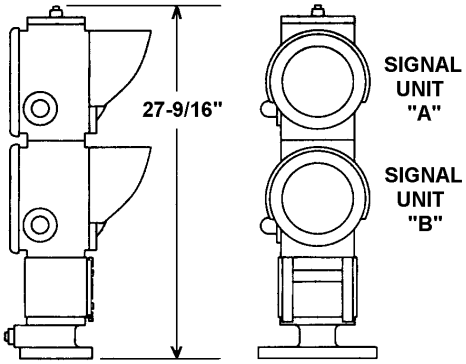

Typical Mast-Mounted Signal

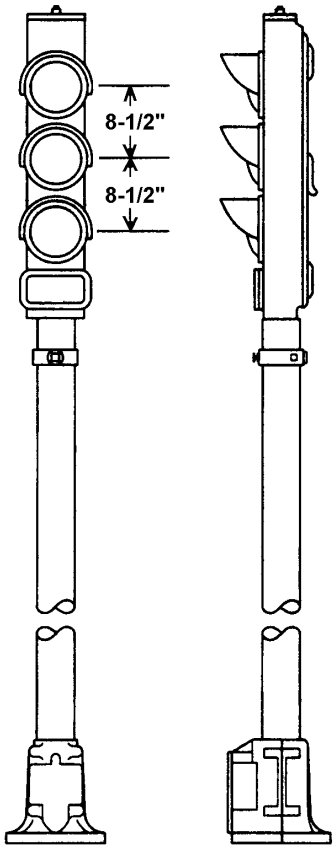

Inclined Cover Glass Assemblies, Phankill Units and Roundels

General Description

US&S' inclined cover glass assembly modifies the beam pattern of signal lamps to obtain optimum deflection and diffusion patterns. These patterns help accommodate each signal installation to variations in track curvature and local topography. The inclined cover glass is designed for the 8-3/8" diameter lens units used in US&S searchlight signals (high and dwarf) and color lights. Components of the assembly include adapter ring, clear roundel and lens ring. The roundel is held in position in the adapter ring by the lens ring and three screws. A gasket between these rings provides a water-tight seal, while a second gasket cemented to the rear of the adapter ring provides another water seal between the inclined cover glass and the signal unit.

A wide assortment of roundels is used in these assemblies to provide the required deflection and spreadlight or diffusion characteristics. While the basic inclined glass assembly minimizes phantom effects, optional Phankill units may be ordered to further reduce these effects. The Phankill is attached with a lens ring and three mounting screws.

Advantages

- Maximum performance from signal optics
- Installs on many different types of signals

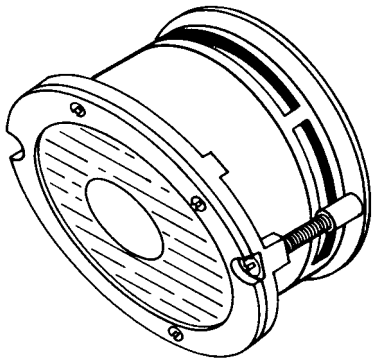

Inclined Cover Glass with Phankill

Ordering Information

- Order basic Inclined cover glass assemblies with clear roundels and without Phankill units from the first ordering tabulation on reverse side.
- Commonly used inclined cover glass assembly with Phankill unit and separate Phankill unit listed in second tabulation. This assembly is intended for US&S color light signals and searchlight signals (except the "H").
- Separate roundels listed in third tabulation.
- Contact your Account Executive to order special assemblies or hardware not listed.

Inclined Cover Glass Complete with Clear Roundel

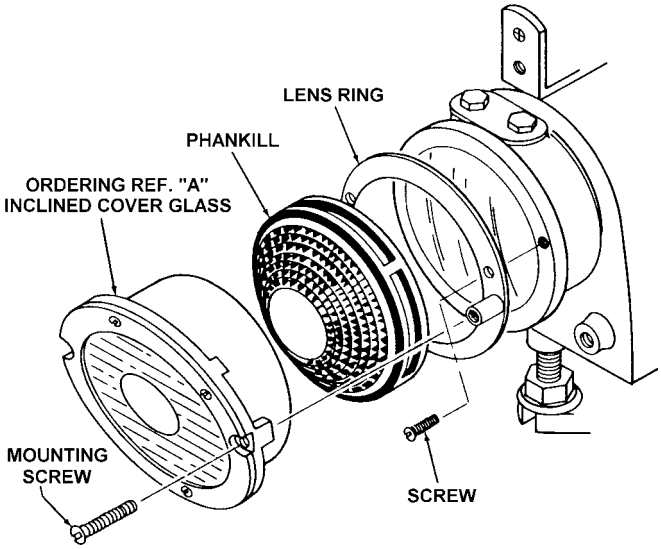

UNION SWITCH & SIGNAL

RSE-7H1
Rev. 7-03

Inclined Cover Glass Assemblies, Phankill Units and Roundels

	Inclined Cover Glass Assemblies: With and Without Phankills				
US&S Order No.	Phankill	Dwg. Ref.	Type	Deflect. Angle	Deflect. Direction
N184403	Without	"A"	Flat, clear	10 deg.	Left
N184404	Without	"A1"	Flat, clear	20 deg.	Left
N220829	Without	"A3"	Flat, clear, plain	--	--
N240656	Without	"A4"	Flat, clear	10 deg.	Up
N391732	Without	"A6"	(w/o roundel)	--	--
X388096	With	--	Flat, clear, plain	--	--
N143504	Phankill Unit only				

	Roundels				
US&S Order No.	Type	Deflect. Angle	Deflect. Direction	Spreadlight	Notes
N199883	Flat, clear	20 deg.	Left	--	--
N216441	Flat, clear	30 deg.	--	15 deg. L & R	--
N222600	Flat, clear	10 deg.	Left	--	--
N249111	Flat, clear, plain	--	--	--	--
N256211	Flat, clear	10 deg.	Up	--	(1)
	Note (1): With painted risers; assembly with prisms removed for searchlight dwarf signals.				

UNION SWITCH & SIGNAL

Signal Lamps

US&S stocks a complete line of incandescent lamps, including quartz-iodine, for railroad and transit signal lights. These lamps are built to exacting specifications and help yield maximum performance from signal unit optical systems. A wide variety of filament, base and bulb configurations are available to satisfy most signal requirements.

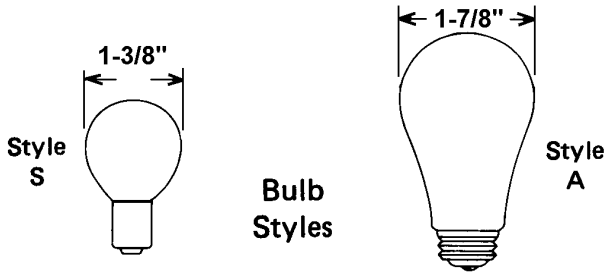

General Description

Bases

Lamp base options include bayonet, re-based and screw types. Bayonet and re-based lamps contain precisely formed filaments that are installed in the lamp base so that the filament is always situated at the exact focal point of the signal's lens system. Screw base lamps are used where precision optical alignment is not required, for example, in short range signals and marker lights. Bayonet-base lamps contain a bulb and a filament unit with a 2-pin base accurately attached to the light center length and axial alignment. The re-based lamp is similar to the bayonet base type, but with a re-basing sleeve in place of the pins. Lamp base contact arrangements include single contact (SC) and double contact (DC). On the single contact unit, connections are made to the base and single contact. For the double contact unit, connections are made to each of the contacts, each of which is independent of the base.

Filaments

Signal lamps incorporate single or double filaments. Filament life of the single-filament lamps depends on the applied voltage. These types of lamps are replaced when the expected maximum operating life (indicated in hours) is exceeded. If a filament burns out in a double-filament lamp, the bulb will remain lit on the remaining filament. These lamps are replaced when visual inspection reveals the first burned out filament. Special double-filament lamps are available with an extended-duration secondary filament. This filament produces a somewhat fainter glow; when the primary filament burns out, the reduced glow of the secondary filament is evident. This helps mark the bulb for replacement.

Advantages

- Lamps service color, search, marker and position lights
- High quality, AREMA-specified

Specifications

Bulb Symbols:	S: Shape (see figure)
	A: Shape (see figure)
	S-X, A-XX: Diameter in 1/8" increments
Filament Symbols:	S: Straight
	C: Coiled
	CC: Coiled coil
	R: Rounded
	V: V-shaped
	MF: Main filament
	SF: Secondary filament
Base Symbols:	2-PS : 2-pin re-based sleeve
	SC: Single contact
	SCBC: Bayonet
LCL:	Light center length
	Bayonet and re-based lamps: Distance from center of light source to top of pins.
	Screw base lamps: Distance from center of light source to bottom of base contact (excl. solder)

UNION SWITCH & SIGNAL

Signal Lamps

RSE-7J1
Rev. 7-03

Ordering Information

- Order signal lamps according to specifications in tabulation below.
- Contact your US&S Account Executive to order special purpose lamps not listed below.

	Signal Lamps								
US&S Order No.	Application	AREMA Item No.	Volts	Amp/Watt CP	Bulb Style	LCL	Base	Filament	Life (Hrs.)
J071463	Color Light	88	10	18W	S-11	1-1/4	SCBC	C-2V	1000
J071574	Color Light	100	10	25W	S-11	1-1/4	SCBC	CC-6	1000
J071613	Color Light	72	11	11W	S-11	1-1/4	SCBC	C-2V	2500
J071656	Searchlight	67	10	13W+3.5W	S-11	1-1/4	SCBC	MF: C-2V CF: C-12	1000
J714166	Color Light	96	10	18W+3.5W	A-15	2-7/32	2-PS	MF: CC-6 CF: CC-6	1500
J071685	Lever Light	49	120	10W	S-11	1-1/4	SC	C-7A	1500
J714283	Highway Cross.	104	10	16W	Q1	1-1/4	SC	C-6	2500
J714284	Highway Cross.	--	10	36W	Q1	--	--	--	--

UNION SWITCH & SIGNAL

RSE-7K1
Rev. 7-03

Mainline Signal Assemblies

General Description

US&S Mainline Signal Assemblies are well suited for most mainline applications. These assemblies are available in various heights with up to three separate signal units (searchlight, color lights or marker lights). All components are factory drilled and fitted for trouble-free erection in the field, and all assemblies comply with AREMA and state regulations.

Some of the component options include:

- 5” or 6” inch diameter masts
- Mast pinnacle
- Ladders
- Platforms
- Hand rail ladder stays
- Foundation piers for ladders
- Regular or electrical junction box bases.

Mast and ladder assemblies are available in both aluminum and steel combinations and sizes. Options include aluminum masts with galvanized steel ladders and steel mast with galvanized steel ladders.

Masts can be selected for mounting one, two or three signal units. Aluminum masts are fabricated from 6” aluminum pipe. Steel masts are fabricated from standard 5” steel pipe posts. For the tallest masts, a standard 5” pipe post in the upper section fitted into a 6” pipe post in the lower section. This arrangement provides added strength for the height.

The steel masts are pre-drilled to accommodate the maximum number of signal units for which the assembly is designed. When a lesser number of signal units is used, the drilled holes can be capped with cover plates. The aluminum or steel mast comes with a junction box base.

The galvanized steel ladder assemblies consist of ladder sections, platforms, handrail, ladder stays, and if specified, foundation piers. If less than three signal units are to be supplied, a ladder stay is furnished in place of a platform.

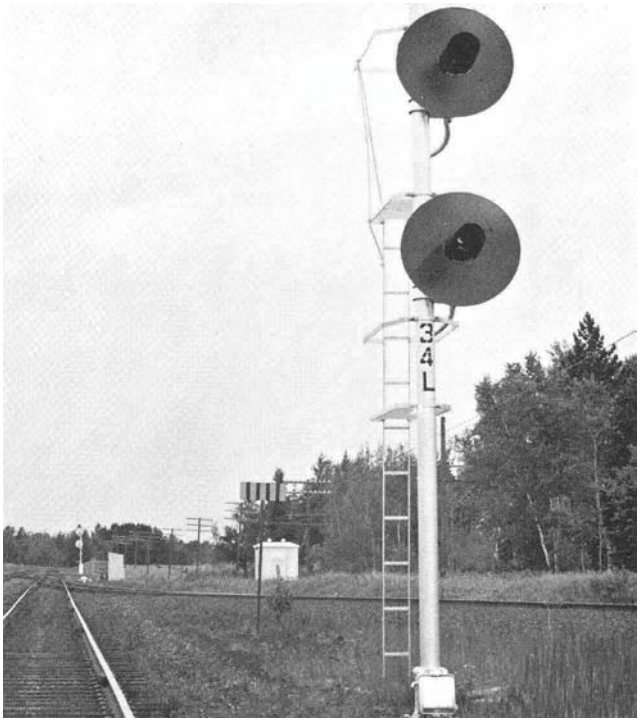

Advantages

- Designed for searchlight, color light and marker light installations
- 2-signal or 3-signal assemblies
- Full complement of mast components
- Factory-fitted components make erection easy
- Assemblies comply with AREMA and state requirements.
- Many combinations available.

Ordering Information

- Contact your US&S Account Executive to order railroad mainline signal assemblies.

See reverse side for typical assemblies.

UNION SWITCH & SIGNAL

Mainline Signal Assemblies

RSE-7K1
Rev. 7-03

Typical 2-Aspect Signal on 22 ft. Mast

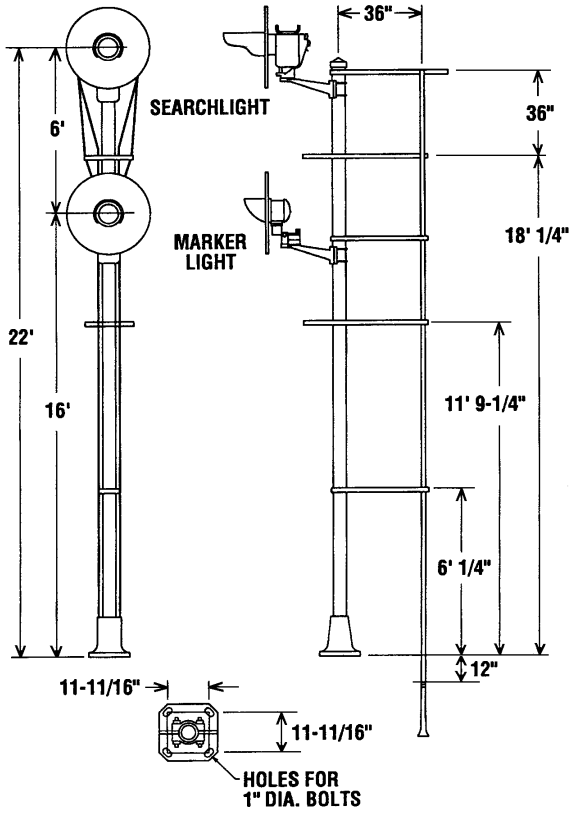

Typical 3-Aspect Signal on 22 ft. Mast

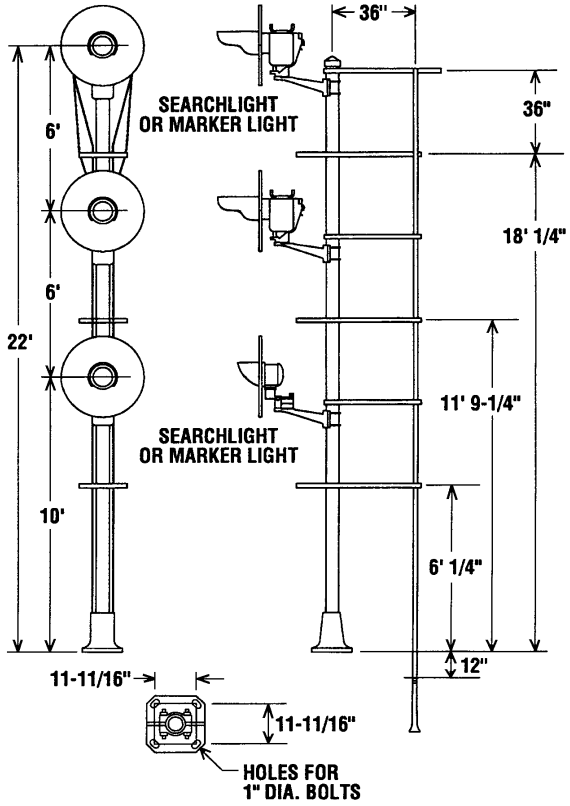



Cab Signal Products

Test Equipment

- MicroCab Shop Test Station (STS)
- MicroCab Portable Test Unit (PTU) Software
- MicroCab Portable Test Equipment (PTE)
- Cab Signal Portable Loop (Code0 Tester

Code and Speed Detection

- Cab Signal Track Receivers
- Cab Signal Axle Generators and Speed Sensors

Vital Relays

- PN-159B Vital Carborne Relay
- PP-151 Vital Carborne Relay (Magnetic Stick)

Misc. Cab Products/Components

- Decelerometer (Brake Assurance Module)
- Common-Use Cab Signal Components

UNION SWITCH & SIGNAL

RSE-8A1
Rev. 7-03

MicroCab® Shop Test Station (STS)

Union Switch & Signal's MicroCab Shop Test Set (STS) is a semi automated test platform optimized for US&S MicroCab system boards and other key assemblies. It fulfills the latest industry requirements for Cab Signal Bench Test Equipment (BTE). On-screen instructions and diagnostics simplify training and operation for the user. The STS also offers general electronic testing and diagnostics capabilities for any shop maintenance needs.

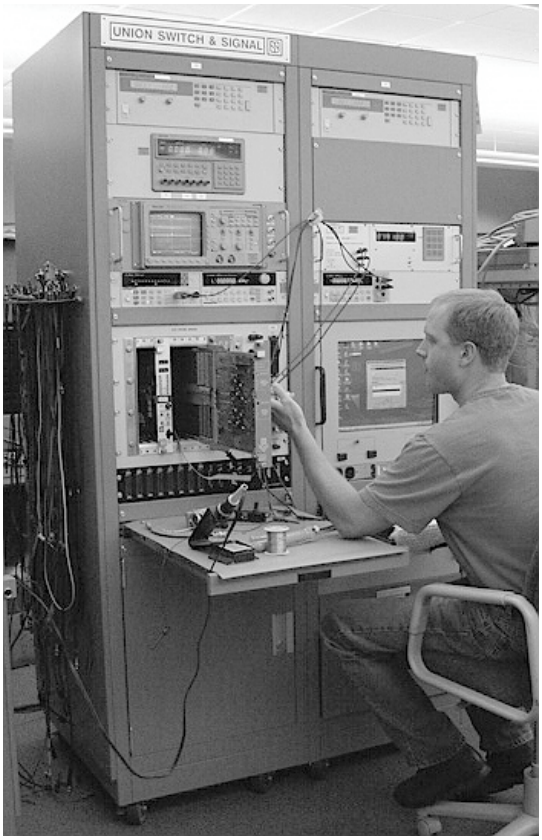

General Description

The MicroCab Shop Test Set (STS) provides factory-qualified testing of MicroCab components utilizing the latest electronic tools. The test signals interface the unit under test (UUT) via a Test Fixture Chassis (TFC). These signals stimulate selected circuits and diagnose any failure points. All tests are traceable to rigid US&S manufacturing standards. User-friendly Labview™ test procedure software minimizes the need for training and speeds the Technician through the diagnostic process. STS "personality modules" (PMs) provide fail-safe configuration with protection for the tested equipment.

Advantages

- Complete accommodations for automated on-site PCB testing and diagnostics
- Minimizes PCB down time and costs
- Helps ensure reliable service
- On-line instructions simplify operation and reduce the need for operator training
- ID-coded Personality Modules (PM's) allow automation of the process of connecting to PCB's and provide fail-safe configuration for the safety of the boards
- The STS can be used for general electronics testing.
- Reliable self test capabilities

Application

The MicroCab Shop Test Set (STS) integrates rack-mounted test instruments and proprietary test fixtures into a single device. The STS is a standard platform that comes with all necessary hardware and software to provide functional testing of supported contract-specified equipment. The operator interface is the "Test Executive", which features menu-driven test procedures, graphical user interface, and extensive help files to aid the technician locate and repair problems. On-screen menus describe all

Application (cont'd)

setup and test procedures in detail. Test reports can be printed or saved for each MicroCab UUT as required. STS users can also test peripheral equipment such as an Aspect Display unit or a non-standard interfaced PCB such as a Power EMI PCB. Non US&S products may also be tested per customer request.

US&S uses only well-established suppliers and quality industry-recognized test equipment. The STS features a test fixture chassis, pull out writing / working surface, pull-out keyboard and mouse, storage drawers, "personality modules" (PM's), documentation, etc. Power supply connections are conveniently located on the front panel of the test fixture chassis. All other instrument connections are found at the front panel of the respective instrument.

The STS is configured by means of Personality Modules (PM). A PM can contain various wiring and test fixture hardware such as load resistors, switches, and test jacks, all arranged for orderly testing of a given US&S product.

UNION SWITCH & SIGNAL

MicroCab® Shop Test Station (STS)

RSE-8A1
Rev. 7-03

Typical Specifications

Dimensions:	83”H x 46”W x 36”D.
Weight:	640 lbs. (approx.)
Operating Temp. Range	15°C to +35°C.
Power Requirements:	120 Vac, 60 Hz, 20A, dedicated
Current Protection:	One, 2-pole, 20 Amp breaker.

Ordering Information

- Contact your US&S Account Executive for ordering information on the MicroCab Shop Test Station.

MicroCab Shop Test Station Equipment Layout

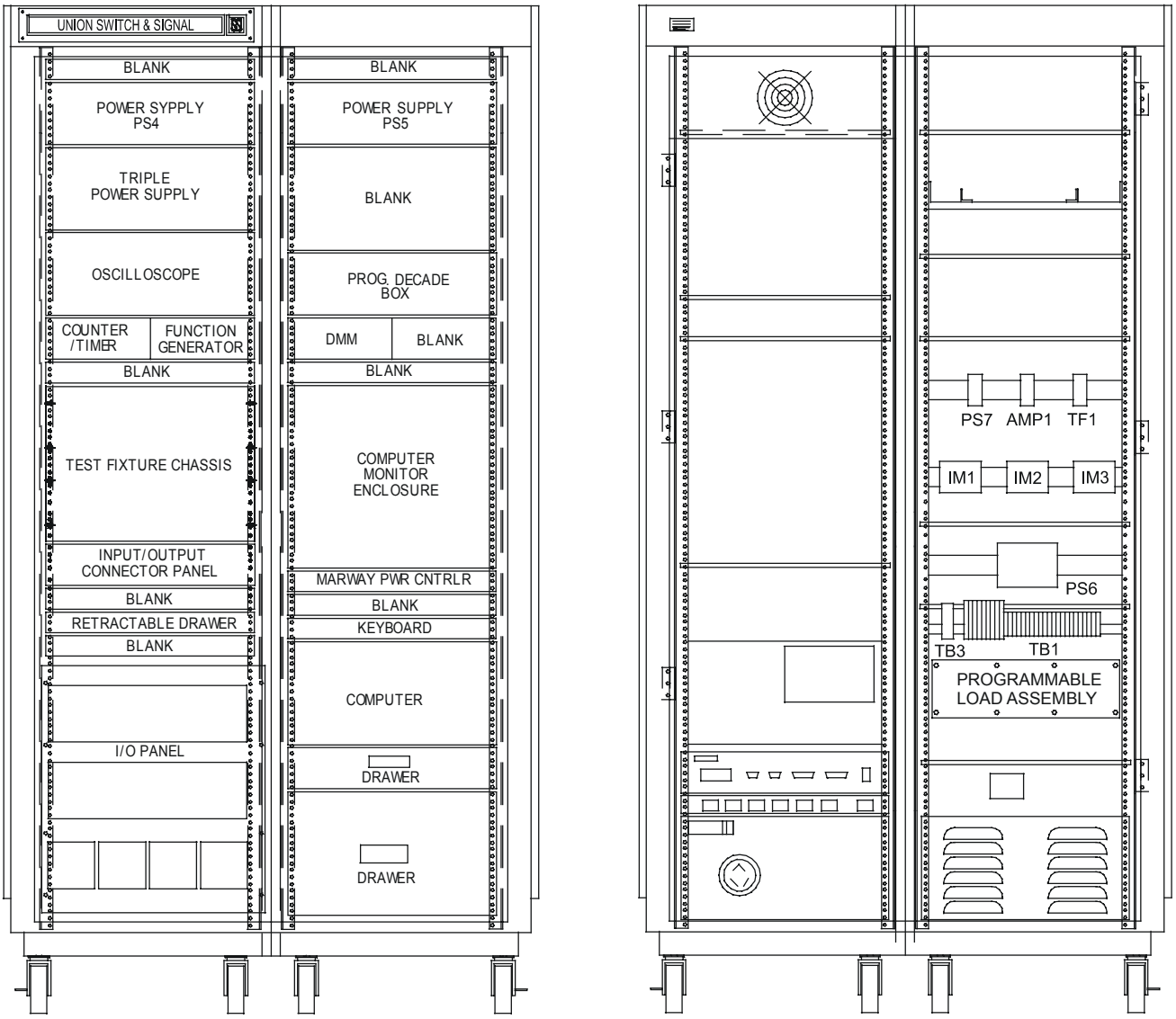

MicroCab® is a registered trademark of Union Switch & Signal Inc.

UNION SWITCH & SIGNAL

RSE-8A2
Rev. 7-03

MicroCab® Portable Test Unit (PTU) Software

US&S' MicroCab Portable Test Unit (PTU) software provides a convenient and comprehensive means of viewing diagnostic software information on an installed MicroCab system. It fulfills the latest industry requirements for a Cab Signal PTU. The PTU consists of customized software for a laptop computer, which is connected directly to a serial data port on the MicroCab system under test. This software can be installed on any commercially available Pentium-based laptop.

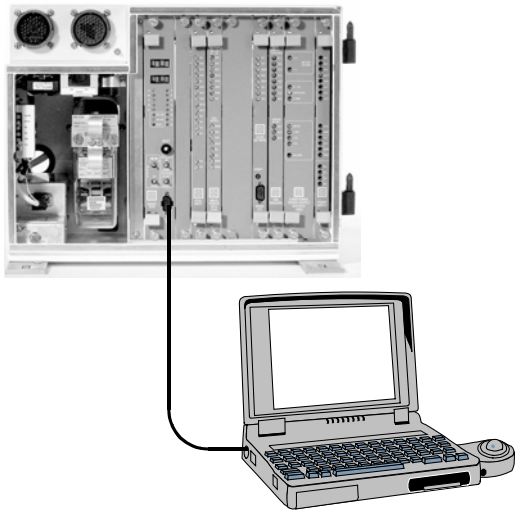

General Information

Basic functions performed by the MicroCab PTU include:

- Uploading events/extraordinary events
- Interpreting event data
- Providing real-time snapshots
- Monitoring specific memory locations MicroCab

The PTU equipment can be quickly and easily set-up and connected to the MicroCab system under test. The set-up procedure consists of (1) attaching an interface cable from the laptop PTU to the appropriate PDTE connector on MicroCab system, (2) switching on the laptop, (3) and using the computer mouse to complete the various connection, password and initialization steps.

Some of the key diagnostic functions available with the PTU include:

- View Active Events - The Active Events menu item brings up a table displaying the events that are currently active in the MicroCab system under test.
- View Event Counters - The Event Counters are indicators used to tally the number of times each event has occurred in the MicroCab system.
- View Event Logs - The Event Logs menu selection is used to display the last 200 events that occurred in the MicroCab system.
- Reset – Edit menu functions allow active events, event counters, event logs, etc. in the MicroCab system to be reset.
- Snapshot - Continuous snapshots are used to display a set of MicroCab system variables for a period of time. The period is variable from 250 milliseconds to 2 seconds. The data is displayed in a tabular form.

These essential functions are supported with a complete range of user utilities to expedite the work of the PTU program. Password protection is included to ensure the vitality of the MicroCab system under test.

Advantages

- Provides thorough examination of MicroCab software files.
- Easily applied using standard laptop PC
- Wide variety of user menu options to access and check out MicroCab event logs and other data.

Ordering Information

- Contact your US&S Account Executive for additional information on the MicroCab PTU software.

See reverse side for typical PTU screen displays.

MicroCab® is a registered trademark of Union Switch & Signal Inc.

UNION SWITCH & SIGNAL

MicroCab® Portable Test Unit (PTU)

RSE-8A2
Rev. 7-03

Typical PTU Event Logs Snapshot Screen

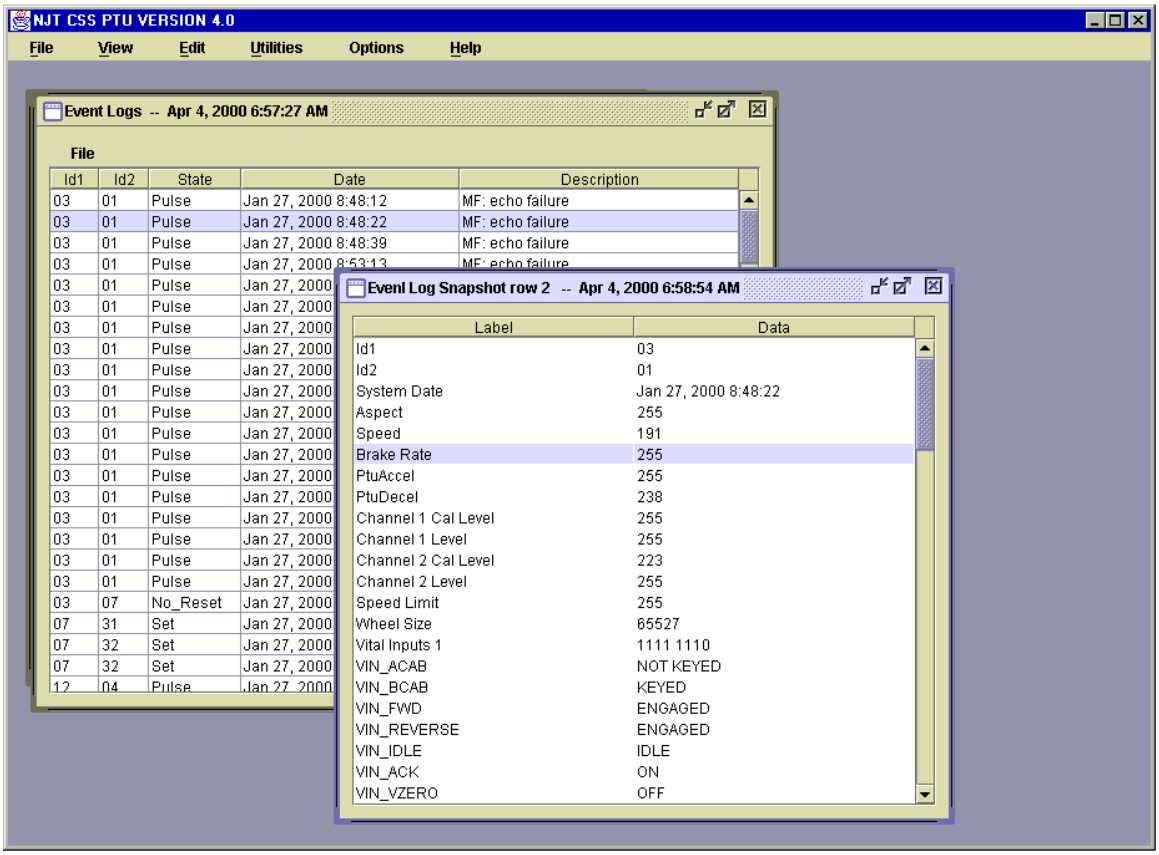

Typical PTU Snapshot Screen Display

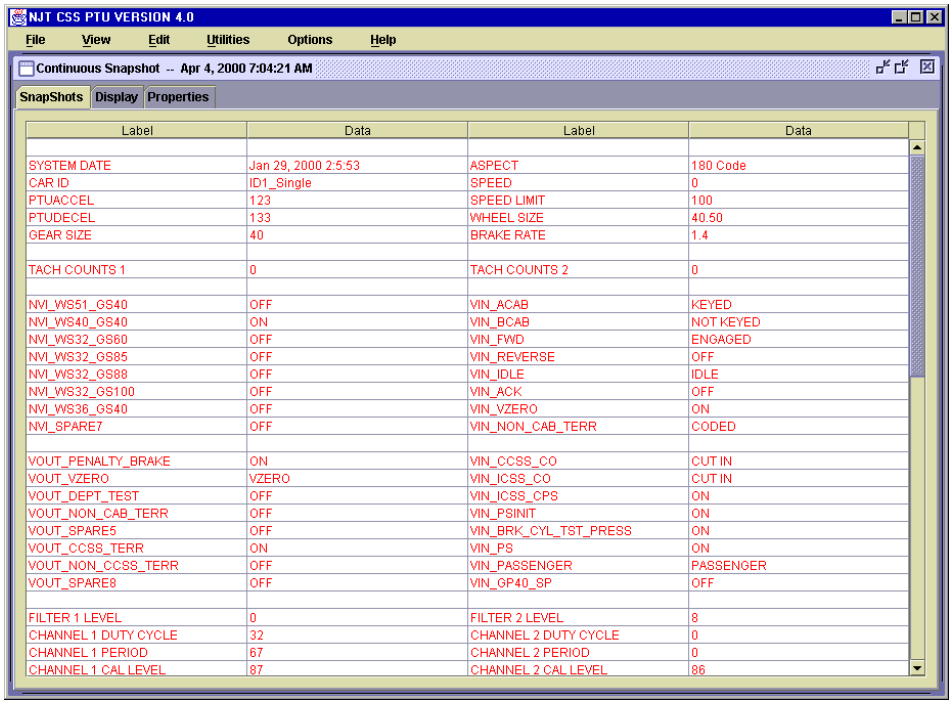

UNION SWITCH & SIGNAL

RSE-8A3
Rev. 7-03

MicroCab® Portable Test Equipment (PTE)

US&S' MicroCab Portable Test Equipment (PTE) provides comprehensive check out of MicroCab as a complete system. The PTE is typically employed when the MicroCab system has been removed from the vehicle for shop maintenance, but can also be utilized in an on-board mode. Testing is provided for Automatic Train Protection (ATP) and Automatic Train Operation (ATO) subsystems, Aspect Display Units (ADUs) and equipment rack units such as vital relays and power supplies.

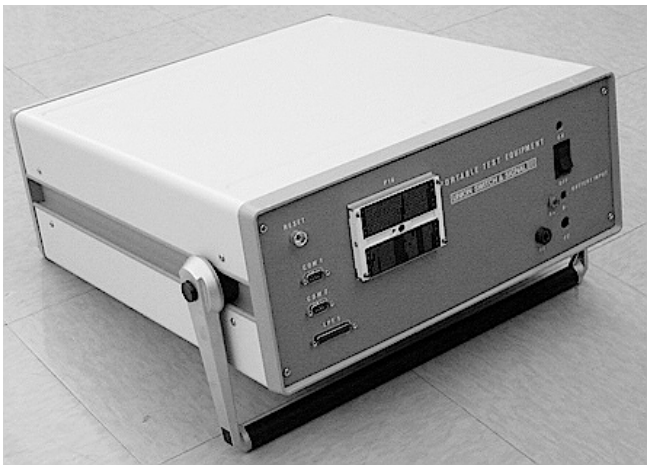

Description

General

The PTE generates various simulated external digital and analog outputs needed to exercise the MicroCab ATP and/or ATO subsystems and ADUs. Direct testing of remote equipment such as axle generators, pick-up coils and brake relays is not provided, however PTE test results can be used to eliminate or identify these devices as possible sources of a problem.

Hardware

The PTE unit consists of a portable, fan-cooled unit that can be stood vertically on the shop floor or horizontally on the shop bench using the unit's wrap-around handle as a support. All supporting PCBs are Commercial-Off-The-Shelf (COTS) to minimize cost and expedite upgrades as they become available.

Customized testing procedures are conducted via the user's laptop PC, which is connected to the PTE via a high speed RS-232 serial link. These procedures are built upon US&S' driver-configurable Standard Portable Test Operating System (PTOS) software platform. This platform performs hardware/software identity checking (in conjunction with actual diagnostics) to make certain that the MicroCab system configuration under test matches the configuration programmed into the PTE.

Diagnostic Software

The MicroCab PTE diagnostic software performs a comprehensive check-out of the MicroCab system under test, and is tailored by US&S for the user's particular MicroCab system configuration. A typical PTE program for a MicroCab ATP system would verify power supply inputs, misc. vital inputs (brake assurance, V-Zero, etc.), cab signal code inputs, vital relay and vital board outputs (full service brake, emergency brake, etc.), non-vital relays, ADU responses, serial links to a MicroCab ATO unit (when required), and the departure test function. ATO system diagnostics consist of a similarly structured sequence of tests (e.g. power supply, master controller inputs, P-Wire driver).

The familiar, Windows™-based PTE diagnostic program displays enable automatic execution of the full test cycle, a single test at will, or repetition of a given test. Stored test results are displayed in easily interpreted format.

Advantages

- Tests MicroCab as an integrated system
- Adaptable to shop or on-vehicle testing
- User-friendly operation with Windows™-based program

Specifications (Typical)

Unit Dimensions:	25"L* x 18.5"W x 7.25"D (*including ZIF connector)
Unit Weight:	50 lbs. (22.6 kg.)
Operating Power Input:	110-120V, 60 Hz AC
Power for Test Outputs:	Up to 100V max.
Cooling:	Fan positive vent. (90 CFM)
MicroCab I/O Interface:	640-pin (max.) ZIF connector
PC or Laptop Interface:	RS-232, 9-pin

Ordering Information

- Contact your US&S Account Executive for additional information on the MicroCab PTE.

See reverse side for typical PTE application.

UNION SWITCH & SIGNAL — MicroCab® Portable Test Equipment (PTE)

RSE-8A3
Rev. 7-03

Typical MicroCab PTE Application

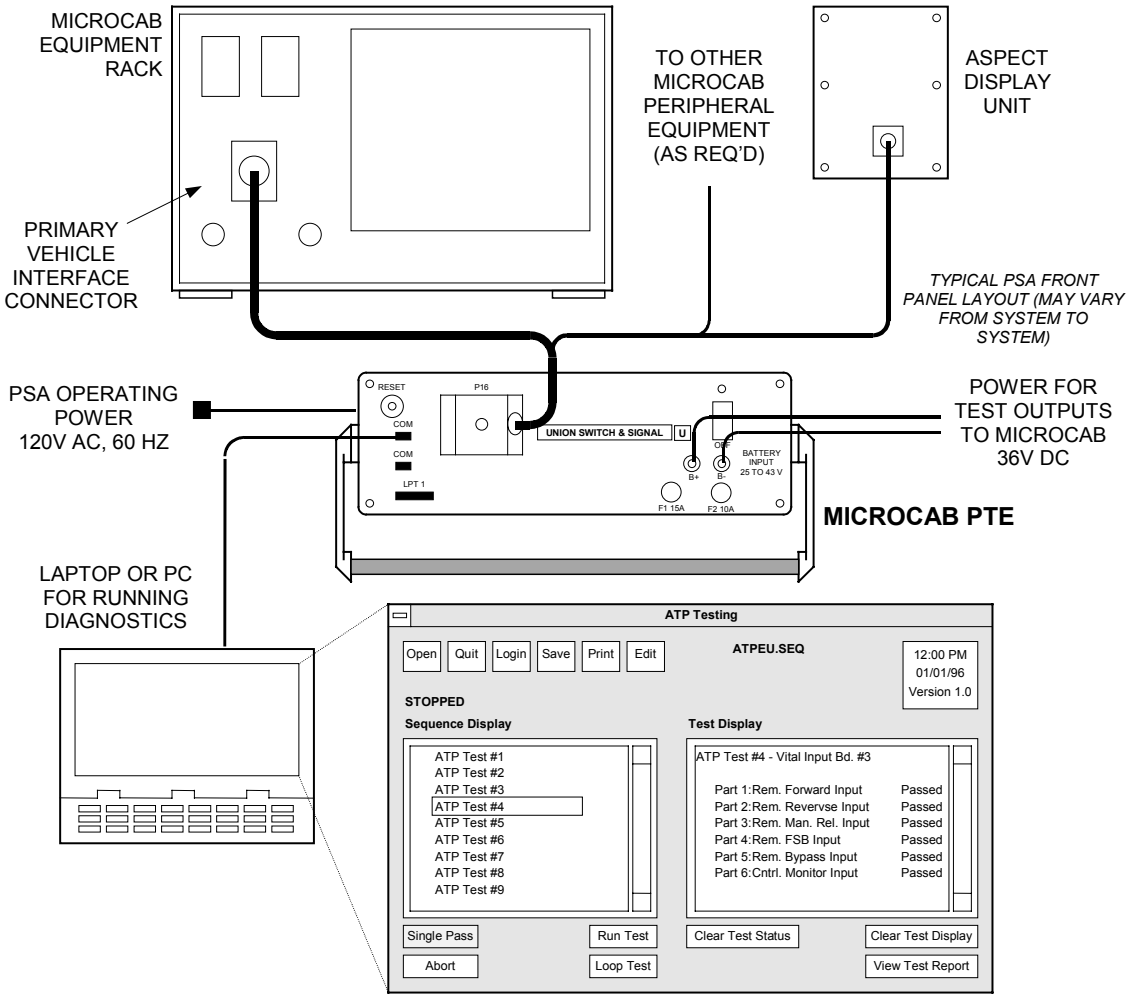

MicroCab® is a registered trademark of Union Switch & Signal Inc.

UNION SWITCH & SIGNAL

RSE-8A4
Rev. 7-03

Cab Signal Portable Loop (Code) Tester

The Cab Signal Loop Tester is a versatile and portable test signal generator designed to produce coded carrier test signals for use in adjusting, testing, and troubleshooting both railroad and transit coded cab signaling equipment such as US&S' MicroCab® system. This portable unit provides a full spectrum of carrier frequencies, code rates and track currents to suit numerous test applications. Standard and customized carrier frequencies can be accommodated, and rack current is continuously adjustable in 0.5, 1, 2, and 3 ampere ranges. The Cab Signal Loop Tester can be augmented with an convenient Test Loop to inject test cab signals into the vehicle's receiver coils. The loop tester box itself requires a minimum of maintenance.



General Description

Portable Test Set

The Cab Signal Loop Tester is a carrier-generating unit used to drive a cab signal rail test loop during testing and calibration of a cab signal system. US&S manufactures custom-designed units to generate cab carrier frequencies (single or dual) such as 60 Hz, 91-2/3 Hz, 100 Hz, 250 Hz or any specialized frequencies in this range, as well as code rates such as standard 50, 75, 120, 180, 270, 420 PPM, No-Code, steady carrier, or specialized code rates. The set can also be designed with a variable oscillator for use in testing the overspeed detection function of the cab signal system.

The Cab Signal Loop Tester may be used with any suitable cab signal test loop to couple test signals into the track receivers. A 10-turn Test Loop is available from US&S for railways that require a high-energy cutout testing capability, in addition to standard cab signal injection.

The typical Cab Signal Loop Tester consists of a modular electrical chassis fitted inside a clamshell fiberglass case. Typical user displays and controls include:

- Switch and potentiometer to control output carrier level
- Ammeter to indicate signal level
- Rotary switch to select code rate
- LED to indicate code rate selected.

Typical power input options include standard 110 Vac commercial power or 36 to 72 Vdc vehicle battery.

The test set's simulated modulated carrier signal is output from a separate cable receptacle on the front panel. This cable is routed to the track test loop which rests on the head of the rails beneath the vehicle track receivers. Two banana jacks on the front panel provide the connection points for the simulated overspeed output. This wiring is routed to the appropriate axle generator connectors on the carborne cab signal system.

Test Loop

The typical Cab Test Loop consists of a single turn of #16 wire. Ten wire turns are also contained within the loop and are switched to enable testing of high energy cutout function using the test set's amplifier (if required by the customer). The loop is constructed of four sections of PVC electrical conduit, and is joined at the comers with 45 deg. elbow junctions. Simulated carrier/code signals are introduced through a single cable connection at one of the junctions. Short, right-angle PVC extensions (set at track gauge spacing) are located near the comers of the assembly to ensure proper mounting on the track.

Advantages

- Assists in troubleshooting and calibration of cab signal systems (e.g. US&S MicroCab or non-US&S cab systems)
- Generates standard or customized high-accuracy carrier frequencies and code rates
- Overspeed testing output available
- Fully portable for quick on-site vehicle testing
- Works with any 1-turn cab loop
- 10-turn cab loop available for high-energy cut-out testing
- 110V or vehicle battery power options
- No calibrations or adjustments of test set required

UNION SWITCH & SIGNAL

Cab Signal Portable Loop (Code) Tester

RSE-8A4
Rev. 7-03

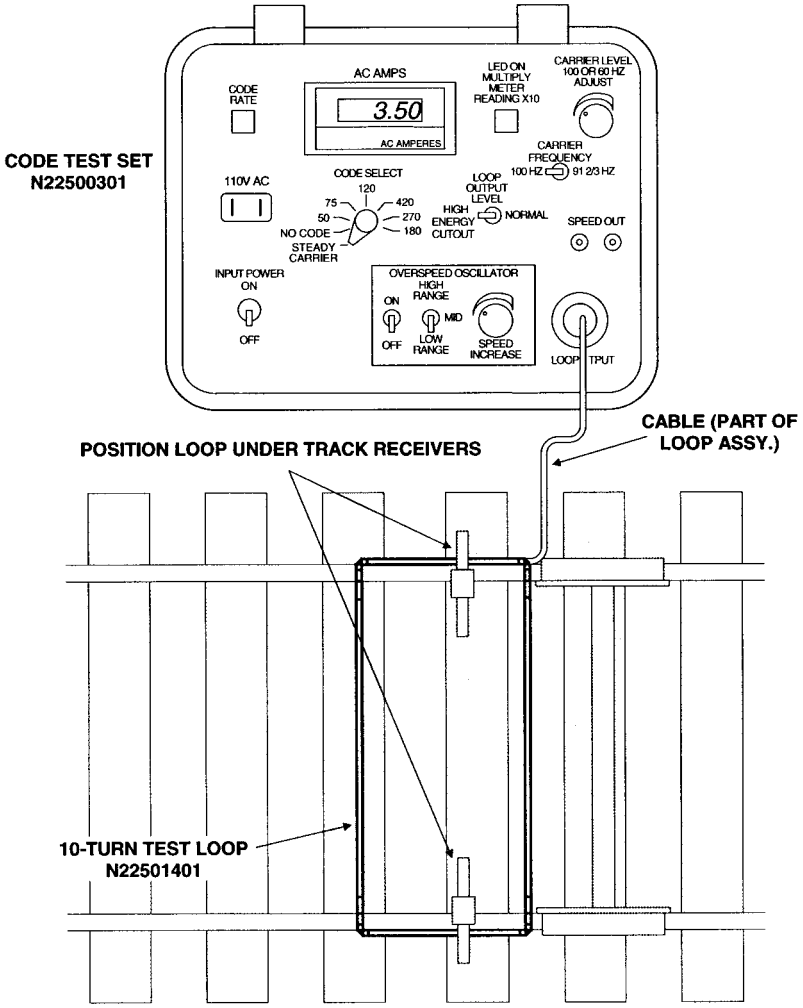

Standard 1-Turn Test Loop Set-Up

Specifications (Typical)

Test Set

Dimensions:	13.1/2”L x 11-9/32”W x 10”D
Weight:	17.5 lbs. (approx.)
Simulated Carrier Freq:	60, 91-2/3, 100, 250 Hz
Simulated Code Rates:	No code or steady carrier 50, 75, 120, 420, 270, 180 PPM
Code Rate Accuracy:	±1 PPM
Input Power:	110 Vac or 36-72 Vdc (veh. batt)
Over Current Protection:	0.75A c-breaker for 110 Vac op. 2.5A c-breaker for 36 to 72Vdc
Output Current:	0.12 Ohm Load: High energy cutout: 3.5A into 10-turn Test Loop N22501401 (35 rail amps equivalent)
Output Current:	0.5 Ohm Load: Normal range: 3.5A into std. 1-turn test loop

Test Set (cont’d)

Simulated Overspeed:	AC sinewave Low: 35 to 250 Hz Mid: 200 Hz to 1.5 KHz High: 1.2 to 9.5 KHz

Cab Test Loop

Dimensions:	63”L x 33”W x 3”D
Weight:	8 lbs.
Mounting:	Extensions fit std. 4’-8.5” gauge
Wiring:	10 turns closed loop, #16 AWG wire (Tefzel insul.)
Cable Plug:	Standard 20A, 3-prong type

Standard 1- Turn Test Loop Wire

Recommended Wire:	#16 AWG
Total Loop Length:	70 ft. (max.)

Cab Signal Portable Loop (Code) Tester

UNION SWITCH & SIGNAL

RSE-8A4
Rev. 7-03

CODE TEST SET
N22500301

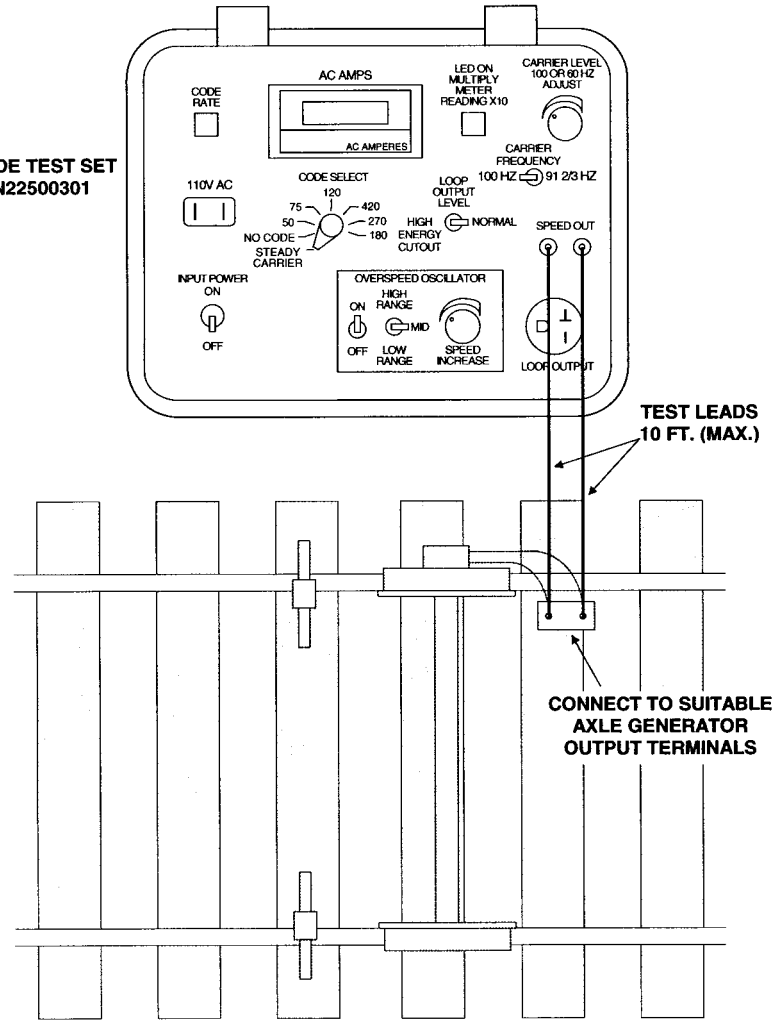

Standard Set-Up for Overspeed Testing

Ordering Information

- Refer to ordering tabulation below for commonly used Cab Loop Test Set and Track Loop.
- Contact your US&S Account Executive for other required configurations and functions.

	Cab Signal Loop Tester Equipment		
US&S Order No.	Device	Carrier Freq.	Code Rates (CPM)
N22500301	Test Set	91-2/3 or 100 Hz	No Code Steady 91-2/3: 75, 120, 180, 270, 420 Steady 100: 50
N4514004201	Test Set	100 Hz	Steady 100: No Code, 75, 120, 180
N4514004202	Test Set	100 or 250 Hz	Steady 100: 75, 120, 180, 270 Steady 250: No Code, 75, 120, 180, 270
N22501401	10-Turn Test Loop (for 91-2/3 Hz high energy cutout applications)		

MicroCab® is a registered trademark of Union Switch & Signal Inc.

UNION SWITCH & SIGNAL

Cab Signal Products

UNION SWITCH & SIGNAL

RSE-8B1
Rev. 7-03

Cab Signal Track Receivers

US&S Cab Signal Track Receivers play the key role of detecting coded cab carriers in the rails and passing this signal to the cab signal system's processing electronics. These ruggedly designed units meet or exceed all industry standards and have a superb performance record on many railroads and mass transit properties. US&S provides receivers and all required installation hardware for both standard (e.g. 100 Hz) and high frequency carrier applications such as those used to pass digital FSK signals to the train.

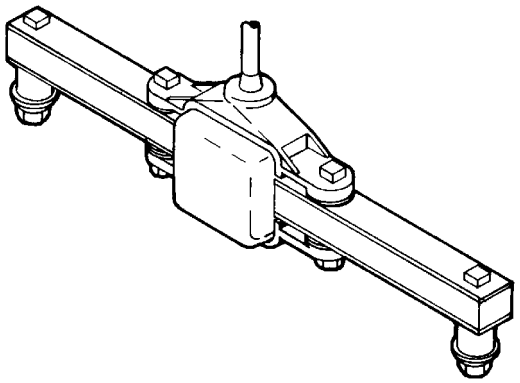

General Description

Track Receivers employ two coils, one for each rail, to assure maximum performance over a variety of operating conditions. Weatherproof, heavy-duty construction is utilized in all components to assure long periods of trouble-free service in the abusive environment under the vehicle.

On the standard carrier frequency units,. each coil is a rubber-encapsulated unit with an integral rigid support. Mounting options include built-in bracket or frame mount type. A weatherproof cable outlet, with pre-wired cable harness assembly, allows quick and easy installation. Each cable harness assembly is terminated in an electrical junction box mounted midway between the receiver coils. The junction box is equipped with an internal terminal board and pipe tap outlets to expedite electrical connections. Track receivers are available with a full fiberglass enclosure to provide enhanced protection against flying debris.

Track receivers designed for high frequency (e.g. digital FSK-based) applications consist of a Ferrite rod encapsulated in a filled fiberglass enclosure with a single data cable entry point. An internal transformer coil surrounds the rod to couple the cab signal detected from the rod into the cable (for connection to the cab signal system). This model of track receiver is also augmented with mounting brackets and junction boxes.

Advantages

- Consistent, reliable detection of coded track signals
- Designed for the rugged undercar environment
- Adaptable to all locomotives and powered cars
- Models for standard and high-frequency cab signals
- Easy installation and connection
- No special maintenance required

Ordering Information

- Refer to ordering tabulation for common-use standard frequency track receiver part numbers and key components.
- Contact your US&S Account Executive regarding track receivers for high-frequency cab signal applications.

See reverse side for track receiver design details.

	Cab Signal Track Receivers
US&S Order No.	
X396287	Track Rec. Kit: L.H. and R.H. 30" receivers, junction box, cable grips, mounting gasket
X437205	Track Rec. Kit: L.H. and R.H. 30" receivers with fiberglas enclosures, junction box, cable grips, mtg. gasket
N396278	30" Receiver unit only, with ferrules.

UNION SWITCH & SIGNAL

Cab Signal Track Receivers

RSE-8B1
Rev. 7-03

Typical Track Receiver Coils Mounting Above Rails

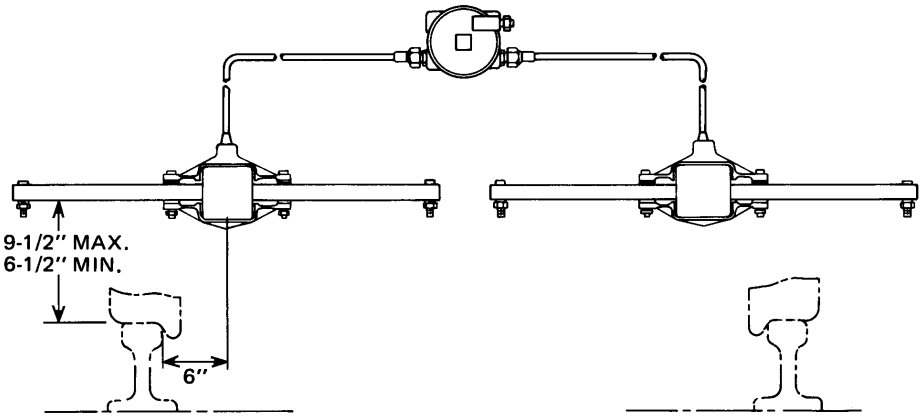

Track Receiver Coil with Fiberglass Protective Enclosure

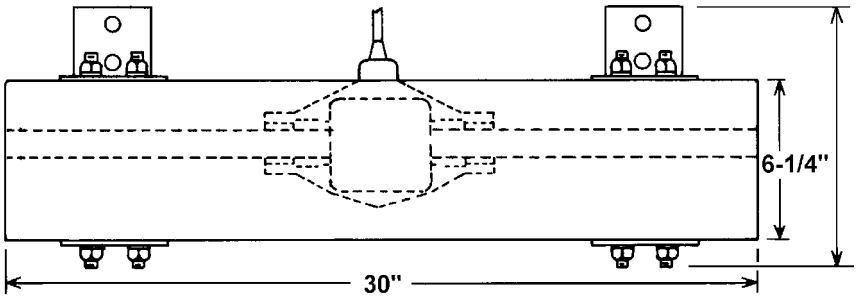

Typical Track Receiver for Digital FSK Cab Signaling

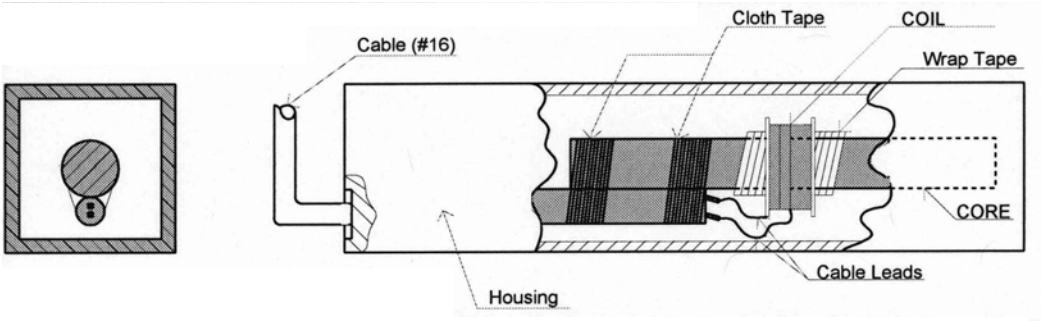

UNION SWITCH & SIGNAL

RSE-8C1
Rev. 7-03

Cab Signal Axle Generators and Speed Sensors

US&S produces dependable, state-of-the-art equipment for measuring and transmitting vital speed data from the locomotive axle(s) to the cab signal system; this data plays a key role in the system's overspeed protection function, as well as other functions such as Velocity Zero (Vz). US&S axle generators provide an immediate and convenient means of applying a speed sensor to a locomotive axle. US&S-procured speed sensor probes adapt to a variety of vehicle applications and meet all industry standards for reliability.



General Description

Axle Generator

US&S' cab signal Axle Generator consists of a magnetic pick-up transducer coil within a rugged, cast iron housing. A gear moves in front of the pick-up sensor, causing the coil to produce a signal frequency proportional to speed. The unit is installed in the axle journal box and mechanically coupled to the axle spline to directly monitor axle rotational speed. A special fitting allows attachment of rubber hose to the generator wiring for added weather protection. Locomotive-customized adapter plates mount the generator to the journal box cover. Flexible or rigid couplings may be used for the drive shaft connection.

Speed Sensors

US&S furnishes both passive and active speed sensor transducers for installation in the Axle Generator, or for installation adjacent to any appropriate axle gear tooth assembly already on the vehicle. Passive sensors utilize a permanent magnet and produce a sine wave signal proportional to speed as the gear passes through the magnet's field. Active speed sensors generate the gear tooth detection field via an active (battery) power source. Both types of sensors are sealed units requiring no service, and incorporate a threaded stem for fastening to the Axle Generator or vehicle's gear housing.

Advantages

- Provides reliable detection and reporting of vehicle axle speed.
- High reliability products to ensure cab signal ATP functions.
- Axle generator adapts speed probe to most any locomotive
- Passive and active speed transducer probes suit most applications

Ordering Information

- Refer to ordering tabulation below for Axle Generator assembly part numbers.
- Request US&S Service Manual SM-5856 for Axle Generator replacement parts.
- Contact your US&S Account Executive for speed sensor ordering information and other details of US&S cab signal systems.

	Cab Signal Axle Generators and Key Components
US&S Order No.	
X4513501502	Axle Generator Kit: Generator unit, junction box, fitting, bushing, pipe plug, cable grip
N4511257003 J7256450006	Axle Generator unit only Replacement drive shaft

UNION SWITCH & SIGNAL

RSE-8C1
Rev. 7-03

Cab Signal Axle Generators and Speed Sensors

Axle Generator Dimensions

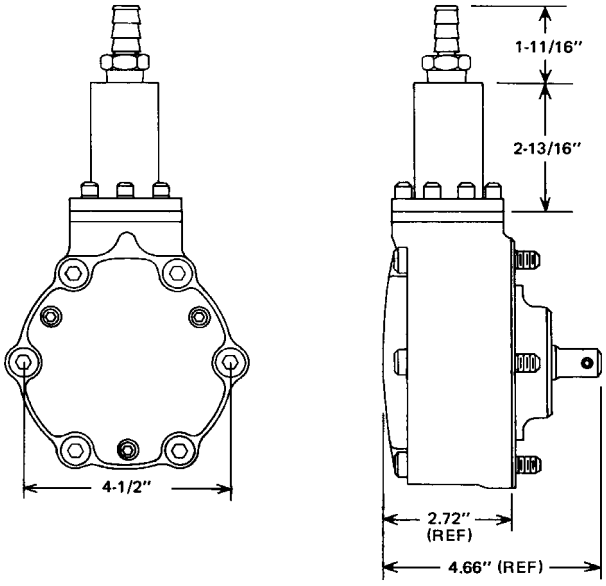

Typical Speed Sensor

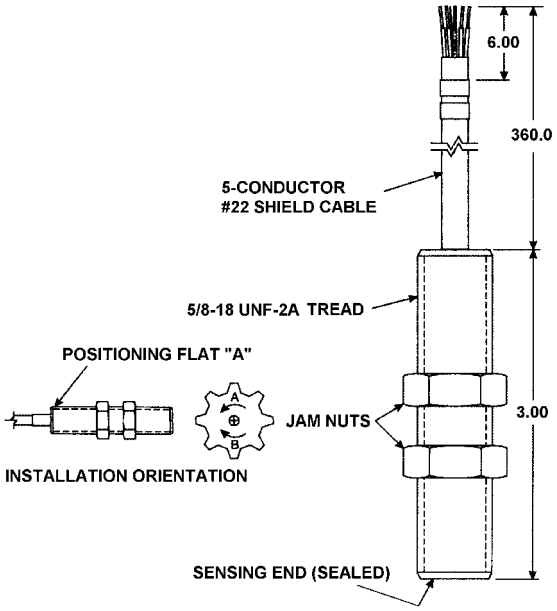

Cab Signal Products

UNION SWITCH & SIGNAL

RSE-8D1
Rev. 7-03

PN-159B Vital Carborne Relay

General Description

The PN-159B plays a key role in many US&S MicroCab systems by providing vital switching of power to the vehicle's brake system, under the overspeed control of the MicroCab CPU logic. It is designed for vibrations and other motions associated with the typical railway vehicle environment. This relay can also be used for a variety of other carborne applications such as interfacing to the vehicle's propulsion or door control systems. The PN-159B is a double coiled, 24 volt relay with coil resistances of 400/400 ohms. Contacts are 6 front-back, low voltage with silver-to-silver impregnated fronts and silver-to-silver backs. Mounting in the vehicle equipment rack base is accomplished with two bolts. Operating options are selected by the configuration of the vehicle's external wiring.

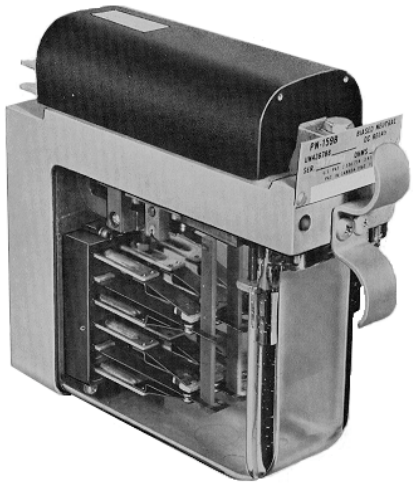

Specifications:

- Refer to the ordering tabulation for operating specifications.

Ordering Information

- Standard PN-159B model, mounting base and hold-down bolt order numbers listed below.
- For detailed specifications and complete parts list, request US&S Service Manual SM-4551W.

	PN-159B Relay and Key Components							
US&S Order No.	"A" Res. (1)	"B" Res. (1)	Charge Volts.	Min. D.A. (2)	Max. D.A. (2)	Contact Pressure (3)	Min. P.U./W. (4)	Max. P.U./W. (4)
N436788	400	400	66	9.0	11.0	5.5	15.5	17
N436797 R4512990102	PN style plug-in mounting base Mounting Bolt/Nut: 1/4-20 N.C. stainless steel							
	Note (1): Coil windings "A" and "B" resistance. Note (2): Minimum and maximum drop-away voltages. Note (3): Full back contact pressure drop-away voltages. Note (4): Minimum and maximum pick-up and working voltages.							

(See reverse side for general features of US&S electro-mechanical vital relays.)

UNION SWITCH & SIGNAL

PN-159B Vital Carborne Relay

RSE-8D1
Rev. 7-03

General Features of US&S PN-Series Electro-Mechanical Vital Relays

US&S vital and non-vital plug-in relays serve a multitude of functions in both railroad and transit control circuit applications. These time-proven relays are space-saving, easily installed or removed and can be handled in the field without disturbing coil or contact wiring.

In addition to production of PN-series electro-mechanical relays at the same high standards, US&S also provides high-quality remanufacturing services for these relays so that they can be returned to service in like-new condition. Refer to the "Remanufacturing Services" of this catalog or call 1-800-652-7276 for additional information.

Advantages

- Wide selection available for every application
- Meets or exceeds applicable AREMA (AAR) requirements
- Plug-in design permits quick installation or removal
- Indexed to assure proper mounting
- Sturdy plug-in base for every relay model
- Operates over wide temperature range

High Quality Design and Assembly

All components of US&S plug-in relays are constructed according to rigid quality control standards and are thoroughly tested before shipment. Coils are encapsulated for protection against mechanical damage and moisture. Magnetic circuits are constructed of non-aging materials. The air gap is not disturbed when the coil is removed or the contact springs adjusted. Those relays with an adjustable magnetic shunt may be adjusted for degree of magnetic hold-down force without changing the contact adjustment or the hold-down pole-piece position.

Contact fingers and springs utilize a simple, reliable design and are heat treated to assure uniformity of material and contact stability. The heavy contact fingers extend through the base to serve as plug connectors. Heel contacts are actuated by operating arms pivoted to the armature. Contact surfaces have sufficient wiping action to be self-cleaning. "Standard" contact materials include fine silver heels and backs, and silver-impregnated carbon (S.I.C.) fronts with a typical capacity of 4A @ 30 Vdc or 175 Vac. "Heavy Duty" (H.D.)" contact materials also include fine silver heels and backs and silver-impregnated carbon (S.I.C.) fronts with a typical capacity of 15A @30 Vdc or 175 Vac.

Other types of contact material for special application are described with the particular relay. Standard contacts are factory-adjusted to standard minimum opening and conform to AREMA (AAR) requirements.

All vital plug-in relays incorporate a transparent molded cover over the relay contacts and armature structure. The cover is sealed to the frame with a gaskethat assures a tight, dust-proof and moisture-proof seal.

Contact Designations

Front and back contacts of plug-in relays are designated "F" and "B", respectively. The dependent contacts are denoted FB, while the independent contacts are denoted "F" or "B" alone.

Testing

Many US&S vital relays are provided a front testing capability. The front testing facility is in series with the coil control circuit to permit deenergization of the relay while it is in its service mounting, without disturbing the relay or wiring. Testing may also be accomplished through the rear of the relay mounting base without opening a contact or coil circuit. Refer to ***RSE-4S1*** for special tools utilized in maintaining US&S plug-in relays.

Latch

A spring-operated latch holds each plug-in relay securely to its mounting base. The latch is released by pressing a button on the front of the relay.

Indexing

All plug-in relays are equipped with indexing pins to prevent insertion of an incorrect relay into the mounting base. Each relay is accompanied by an indexing plate that is applied to the base at the initial installation.

System Voltage

This voltage, which is listed in the relay ordering tabulation specifications, is prescribed for relays in locally energized circuits. Higher voltage may be used, if required, up to 10 watts power dissipation.

Cab Signal Products

UNION SWITCH & SIGNAL

RSE-8D2
Rev. 7-03

PP-151 Vital Carborne Relay (Magnetic Stick)

General Description

The PP-151 magnetic stick vital carborne relay is typically used in carborne applications such as switchover from cab signaled mainline operation to non-signaled yard operation, and system cut-out control. It is designed for vibrations and other motions associated with the typical railway vehicle environment. The PP-151 is designed to hold its present state when power is removed, and incorporates six silver-to-silver impregnated carbon contacts, normal and reverse. Front testing is not available.



Specifications:

- Refer to the ordering tabulation for operating specifications.

Ordering Information

- Refer to the ordering tabulation for PP-151 relay and mounting base part numbers.
- Refer to RSE-4K1 for the wayside version of the PP-151 relay.
- For detailed specifications and complete parts list, request US&S Service Manual SM-4596G

	PP-151 Relay and Mounting Base		
US&S Order No.	Coil Res.	Min. P.U./W (1)	Max. P.U./W. (1)
N437657	400/400	9.6	7.4
N4513760302	Mounting Base		
	Note (1): Minimum and maxium pick-up and working volts.		

(See reverse side for general features of US&S electro-mechanical vital relays.)

UNION SWITCH & SIGNAL

PP-151 Vital Carborne Relay

RSE-8D2
Rev. 7-03

General Features of US&S PN-Series Electro-Mechanical Vital Relays

US&S vital and non-vital plug-in relays serve a multitude of functions in both railroad and transit control circuit applications. These time-proven relays are space-saving, easily installed or removed and can be handled in the field without disturbing coil or contact wiring.

In addition to production of PN-series electro-mechanical relays at the same high standards, US&S also provides high-quality remanufacturing services for these relays so that they can be returned to service in like-new condition. Refer to the "Remanufacturing Services" of this catalog or call 1-800-652-7276 for additional information.

Advantages

- Wide selection available for every application
- Meets or exceeds applicable AREMA (AAR) requirements
- Plug-in design permits quick installation or removal
- Indexed to assure proper mounting
- Sturdy plug-in base for every relay model
- Operates over wide temperature range

High Quality Design and Assembly

All components of US&S plug-in relays are constructed according to rigid quality control standards and are thoroughly tested before shipment. Coils are encapsulated for protection against mechanical damage and moisture. Magnetic circuits are constructed of non-aging materials. The air gap is not disturbed when the coil is removed or the contact springs adjusted. Those relays with an adjustable magnetic shunt may be adjusted for degree of magnetic hold-down force without changing the contact adjustment or the hold-down pole-piece position.

Contact fingers and springs utilize a simple, reliable design and are heat treated to assure uniformity of material and contact stability. The heavy contact fingers extend through the base to serve as plug connectors. Heel contacts are actuated by operating arms pivoted to the armature. Contact surfaces have sufficient wiping action to be self-cleaning. "Standard" contact materials include fine silver heels and backs, and silver-impregnated carbon (S.I.C.) fronts with a typical capacity of 4A @ 30 Vdc or 175 Vac. "Heavy Duty" (H.D.)" contact materials also include fine silver heels and backs and silver-impregnated carbon (S.I.C.) fronts with a typical capacity of 15A @30 Vdc or 175 Vac.

Other types of contact material for special application are described with the particular relay. Standard contacts are factory-adjusted to standard minimum opening and conform to AREMA (AAR) requirements.

All vital plug-in relays incorporate a transparent molded cover over the relay contacts and armature structure. The cover is sealed to the frame with a gaskethat assures a tight, dust-proof and moisture-proof seal.

Contact Designations

Front and back contacts of plug-in relays are designated "F" and "B", respectively. The dependent contacts are denoted FB, while the independent contacts are denoted "F" or "B" alone.

Testing

Many US&S vital relays are provided a front testing capability. The front testing facility is in series with the coil control circuit to permit deenergization of the relay while it is in its service mounting, without disturbing the relay or wiring. Testing may also be accomplished through the rear of the relay mounting base without opening a contact or coil circuit. Refer to ***RSE-4S1*** for special tools utilized in maintaining US&S plug-in relays.

Latch

A spring-operated latch holds each plug-in relay securely to its mounting base. The latch is released by pressing a button on the front of the relay.

Indexing

All plug-in relays are equipped with indexing pins to prevent insertion of an incorrect relay into the mounting base. Each relay is accompanied by an indexing plate that is applied to the base at the initial installation.

System Voltage

This voltage, which is listed in the relay ordering tabulation specifications, is prescribed for relays in locally energized circuits. Higher voltage may be used, if required, up to 10 watts power dissipation.

Cab Signal Products

UNION SWITCH & SIGNAL

RSE-8E1
Rev. 7-03

MicroCab® Decelerometer (Brake Assurance Module)

US&S' MicroCab Decelerometer provides a precise vehicle braking rate using new electronics that offer greater capabilities, reliability, and user safety than earlier designs. At the heart of this decelerometer is an electric tilt sensor that is similar to those used in aerospace applications to assure vertical flight. One Decelerometer module replaces two slosh-tube decelerometers on a given railroad locomotive or transit vehicle.



General Description

The MicroCab Cab Signal Decelerometer is a solid-state device designed to measure a vehicle's rate of deceleration and provide a logic output to the MicroCab system when a preselected deceleration rate has been exceeded. In the typical application, if the operator fails to brake the vehicle at the minimum required rate, the resulting Decelerometer output to the MicroCab logic results in a penalty brake application request.

Deceleration measurement is done inertially in the same fashion as a pendulum decelerometer. The unit employs an electrolytic tilt sensor to measure deceleration in either direction of travel, thus it performs the same function as two uni-directional slosh tube decelerometers in most applications. Slosh tube decelerometers used a fragile, mercury-filled glass tube that can be easily broken and expose the maintainer to dangerous liquid mercury. Aerospace electrolytic tilt sensors, on the other hand, contain no hazardous materials and are designed to resist severe shocks, g loads and vibrations.

In the typical MicroCab system application, the Decelerometer is mounted in the main ATC/ATP equipment enclosure adjacent to the MicroCab cardfile or PN-159B vital relay. The physical orientation of the unit is determined general orientation of the enclosure relative to the vehicle's longitudinal axis. The Decelerometer consists a small, low-profile steel enclosure with integral rack mounting bracket, and is electrically connected via a front 9-pin "D" female plug. Also at the front of the module is a screwdriver adjustment that permits final on-vehicle leveling of the tilt sensor prior to service. (Decelerometer adjustments are typically performed in conjunction with LED menu displays on the MicroCab CPU logic board.)

Deceleration rates are typically selected over a range of 1.1 to 1.8 miles per second (MPHPS) in increments of 0.1 MPHPS. Other ranges can be calibrated at the factory per customer requirements.

The Decelerometer's electronics incorporate fail-safe design principles so that a component failure cannot result in the detection of a less than desired brake rate.

Advantages

- Provides bi-directional braking rate measurement.
- Field-selectable brake rate adjustment
- Uses electrolytic speed sensor; dangerous mercury slosh tube eliminated.
- Designed for the vehicle environment.
- Adapts to any MicroCab system configuration

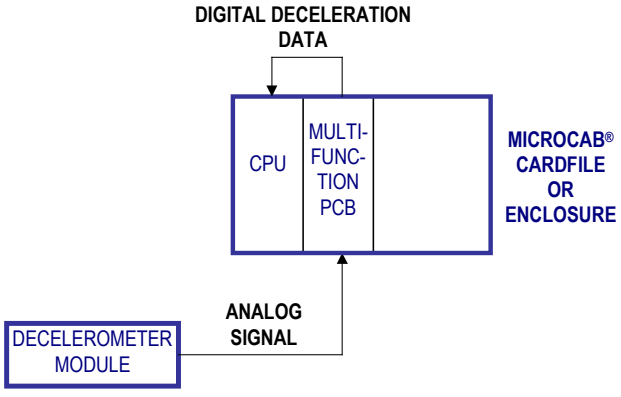

To more information, contact your US&S Account Executive.

ANSALDO SIGNAL
A Finmeccanica Company

www.switch.com

RSE Catalog Sections

< >

UNION SWITCH & SIGNAL

RSE-8E1
Rev. 7-03

MicroCab® Decelerometer (Brake Assurance Module)

Specifications (Typical)

Unit Dimensions:	7-3/4”L x 2-1/2”W x 2-1/2’D
Unit Weight:	2 lbs. (approx.)
Wiring Connection:	9-Pin “D” plug (female)
Operating Power:	Vehicle battery (36 to 72 Vdc, typ.)
Braking Rate Adjust.:	1.1 to 1.8 MPHPS, 0.1 MPHPS incr.

Ordering Information

- Contact your US&S Account Executive for additional information on the Decelerometer and MicroCab system application possibilities.

MicroCab® is a registered trademark of Union Switch & Signal Inc.

UNION SWITCH & SIGNAL

RSE-8F1
Rev. 7-03

Common-Use Cab Signal Components

This catalog section provides part numbers for a variety of commonly used key subassemblies and components for US&S MicroCab systems and earlier systems such as EL and EH.

Check updates to this catalog section for additional US&S cab signal products. Contact your US&S Account Executive for any replacement parts not listed here.

EH Filter



Test Pressure Switch



Vital Time Delay Unit



Overspeed Magnet Valve

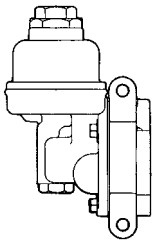

3-Amp Power Supply



Magent Valve Whistle



Acknowledge Switch



Main/Cut-Out Switch



Non-Vital Relay



	EH 60 Hz, 100 Hz Filters	
US&S Order No.	Frequency	Type
N4516172902	100 Hz	Plug-In
N4516320302	100 Hz	Shelf
N4516322701	60 Hz	Shelf

	Test Pressure Switch
US&S Order No.	
J7257070066	Test Pressure Switch: Form R contact, close@35spi, open@ 20 psi

	Vital Time Delay Unit
US&S Order No.	Delay Interval
N4514899001	6 to 8 sec.
N4514899002	4 to 5 sec.

	Overspeed Mag. Valve	
US&S Order No.	Operating Volt.	Resistance
J337164	20 to 48 Vdc	84 ohms

UNION SWITCH & SIGNAL

RSE-8F1
Rev. 7-03

Common-Use Cab Signal Components

	3 Amp Power Supplies				
US&S Order No.	Input Volt.	Output V. "A" (1)	Output V. "B" (2)	Output V. "C" (3)	Output V. "D" (4)
N4510334401	77-125 Vdc	32 Vdc	15 Vdc	20 Vdc	100 Vdc
N4510334402	50-80 Vdc	32 Vdc	--	20 Vdc	100 Vdc
N4510334403	24-45 Vdc	32 Vdc	--	20 Vdc	100 Vdc
	Note (1): @3.0 A±1 Vdc Note (2): @0.5 A -1 Vdc, +2 Vdc Note (3): With 680 ohm load, 21 to 24 volts. Note (4): With 6.2K ohm load, 90 to 120 volts.				

	Audible Alarms		Acknowledge Switches	
US&S Order No.		US&S Order No.	Position	Type
J700022 J705057001	Magnet Valve Air Whistle Sonalert, 2900 Hz tone, 6 to 28 Vdc	N137633001	2-Pos.	Spring Return Footswitch
		N275155	3-Pos.	Spring Return Lever, opaque

	Main/Cut-Out Switch		Cab Non-Vital Relays
US&S Order No.		US&S Order No.	
N102105	Main Switch and Cut-Out Switch	J7261530018 J7261530134	Non-Vital Relay: 24 Vdc, 4PDT Non-Vital Relay: 4PDT



Misc. Products and Components

Misc. Installation & Service Parts

UNION SWITCH & SIGNAL

RSE-9A1
Rev. 7-03

Miscellaneous Service and Installation Parts

US&S supplies the complete range of general-purpose mechanical and electrical parts used in the servicing and installation of wayside signaling systems. These components range from individual AREMA (AAR)-standard nuts and washers to complete track circuit power resistor assemblies. US&S service and maintenance parts meet or exceed all signaling industry standards, and have been used on hundreds of rail properties for many decades.

This catalog section lists the most commonly ordered service and installation components. If you do not find a particular component of interest, call 1-800-652-7276 or contact your US&S Account Executive for availability/ordering information.

K-10 Terminal Block

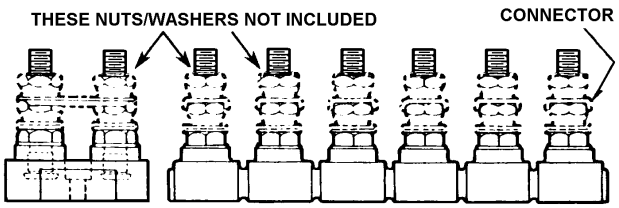

K-40 Terminal Block

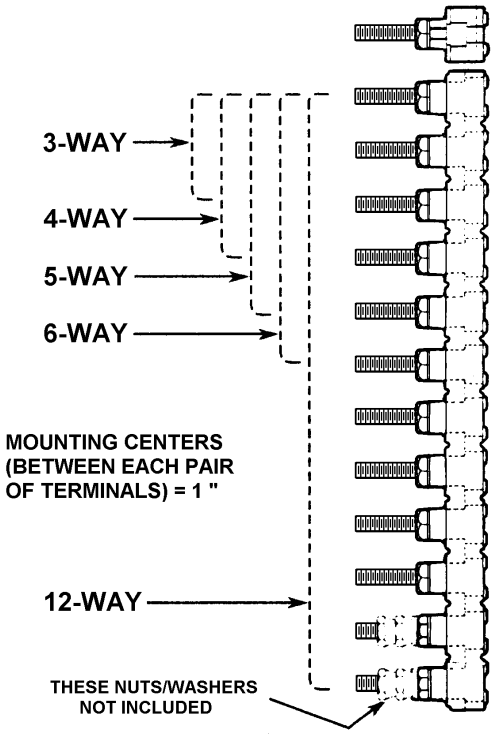

Binding Nut J480301

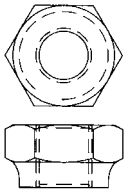

Clamping Nut J480300

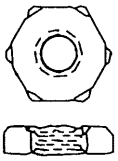

Test Link with Nuts

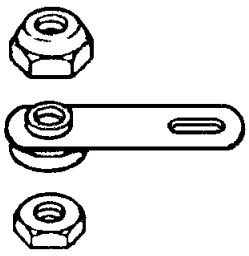

Insulated Molded Cap

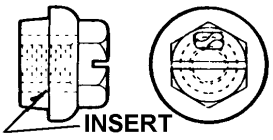

UNION SWITCH & SIGNAL

RSE-9A1
Rev. 7-03

Miscellaneous Service and Installation Parts

Figure A. 4" Terminal Block and Fuse Holder for 250V Fuses

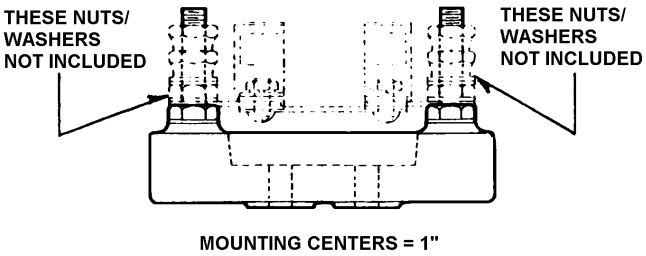

Figure B. 7" Terminal Block and Fuse Holder for 600V Fuses

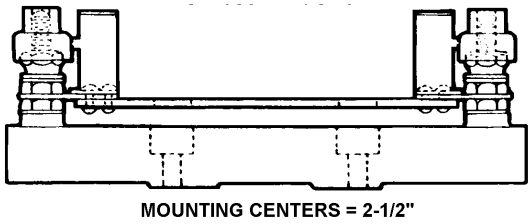

Figure C. – Adjustable Resistor Without Terminal Block

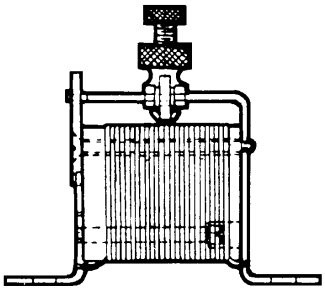

Figure D. – Adjustable Resistor With Terminal Block

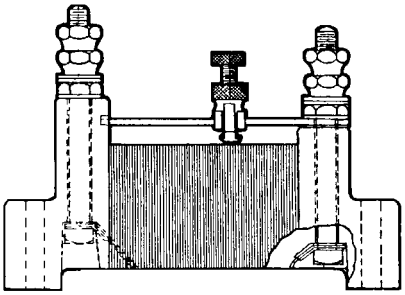

Figure E. – SRA Track Circuit Power Resistor (Single Type)

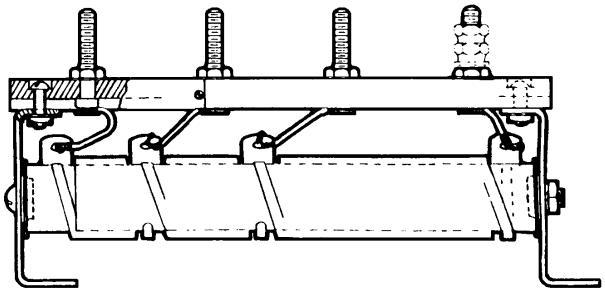

Figure F. – SRA Track Circuit Power Resistor (Two In Parallel)

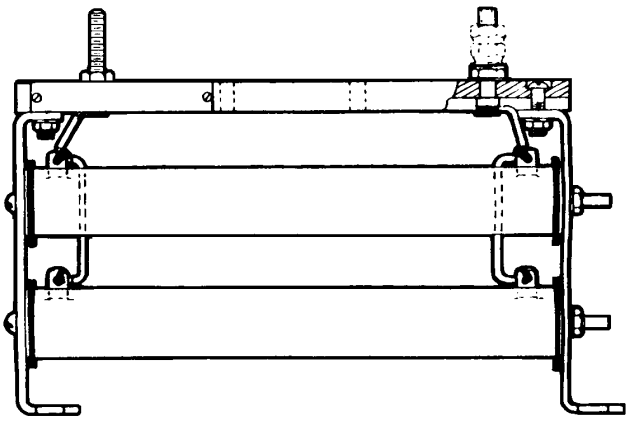

Miscellaneous Service and Installation Parts

UNION SWITCH & SIGNAL

	"K" Style Multiple Terminal Blocks	
US&S Order No.	Type	Terminals
N178389	K-10	12-way, with test link
N223598	K-40	3-way
N107472	K-40	4-way
N223597	K-40	5-way
N226857	K-40	6-way
N106937	K-40	12-way

	AREMA (AAR) Nuts, Washers and Test Links
US&S Order No.	
J047818	Washer
J480300	Flat Clamping Nut, Brass 14-24
J480301	Hex Binding Nut, 14-24
J071682	1" Test Link with Gold Nut and Clamp Nut

	Insulated Molded Caps
US&S Order No.	
J078169	Cap, with Molded-In Brass Insert
J078147	Cap, without Molded-In Brass Insert

	Fuses		
US&S Order No.		US&S Order No.	
J071008	Fuse: 5A, 250V	J071127	Fuse: 30A, 250V
J071117	Fuse: 6A, 250V	J710069	Fuse: 20A, 600V
J071013	Fuse: 10A, 250V	J071198	Fuse: 30A, 600V
J071107	Fuse: 20A, 250V		

	Combination Terminal Block/Fuse Holder		
US&S Order No.	Unit Length	Fuse	See Figure
N238637	4"	250V	"A"
X227083001	7"	600V	"B"

	Adjustable Resistors (With and Without Terminal Block)					
US&S Order No.	Terminal Block	Amps Cap.	Max. Res. (Ohms)	Min. Res. (Ohms)	Adj. In Steps (Ohms)	See Figure
N144909	--	1.7	2.0	0.04	0.08	"C"
N144910	--	1.1	5.0	0.10	0.20	"C"
N438937	--	2.5	2.4	0.50	0.01	"C"
N156681	X	3.3	1.2	0.50	0.555	"D"
N156682	X	2.3	2.5	0.30	0.10	"D"
N156683	X	1.7	4.5	0.30	0.09	"D"
N156684	X	1.0	12.0	0.70	0.25	"D"
N161444	X	0.86	16.0	1.00	0.32	"D"
N186438	X	2.0	3.5	0.24	0.07	"D"
N212815	X	4.5	0.6	0.041	0.027	"D"
N214995	X	1.1	9.0	0.6	0.18	"D"
N215747	X	0.77	20.0	1.2	0.4	"D"
N438421	X	--	0.066	0.054	--	"D"

UNION SWITCH & SIGNAL

RSE-9A1
Rev. 7-03

Miscellaneous Service and Installation Parts

	Style SRA Track Circuit Power Resistors				
US&S Order No.	Type	Res. (Ohms) (1)	Current (Amps) (1)	US&S Power Rating (W)	See Figure
N4511400101	Single	1.5	10.0	150.0	"E"
N4511400102	Single	5.0	4.0	80.0	"E"
N4511400104	Dual (2)	50.0	1.75	150.0	"F"
	Note (1): Rating @ total resistance. Note (2): Two resistors in parallel				