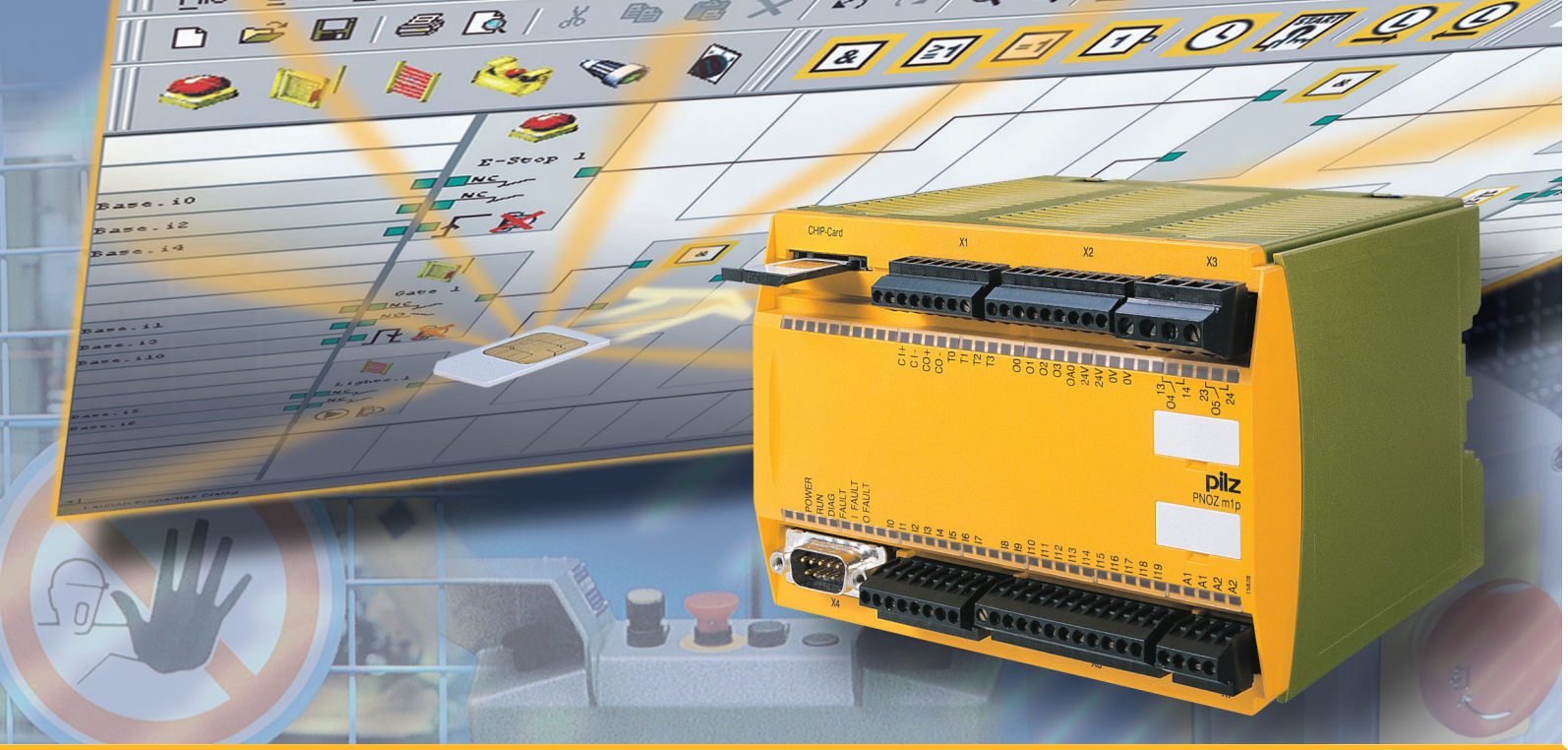

Technical Catalogue
PNOZmulti Product Range

pilz
more than automation
safe automation

System configuration manual
PNOZmulti modular safety system

March 2004 edition

PNOZmulti modular safety system

Requirements

Please note the following when preparing to commission the unit:
- The safety system and input circuits must always be supplied by a single power supply. The power supply must meet the regulations for extra low voltages with safe separation (SELV, PELV).
- The plug-in terminals for the inputs and outputs are not supplied with the system. You can select between a cage clamp connection or a screw connection.
- Use copper wire that will withstand temperatures of 60/75°C.
- Torque setting on the connection terminals (M3 slotted-head screws), see technical details.
- Test pulse wires should **not** be laid together with actuator wires within unprotected multicore cable.
- Test pulse outputs must only be used to test the inputs. It is **not permitted** to use them to drive loads.
- **Only** safety outputs should be used for safety-related applications.
- The auxiliary outputs can be used for communication with a PLC or text display, for example. Appropriate measures should be taken to protect the auxiliary outputs on the PNOZmulti units when driving contactors or relays.
- Only contactors with positive-guided contacts should be used on the PNOZmulti's safety outputs (see "Feedback loop" in Chapter 7).

Input devices

When selecting input devices, you must comply with the technical details of the input circuits on the PNOZmulti units. To help you in your selection, Pilz has performed application tests with a number of input devices. The following input devices have passed the application test:
- Light barriers:
  - SICK FGS
  - SICK C4000
  - Honeywell MEYLAN
  - CEDES Safe 4
  - OMRON F3SN-A
  - Fiessler ULVT
  - STI Minisafe 4600 (from S/N: AC283791 or BA022933)
  - STI Optofence OF 4600
- Limit switches:
  - Schmersal AZ 16-02
  - Guardmaster ferrocode
  - Euchner NP1-628AS
  - Euchner CES-A-C5E-01 (only when operating without detection of shorts across contacts)
  - Euchner CES-A-C5E-01 (only with test pulse wiring)
  - Euchner ENG-071990
  - Euchner NM11KB

The following may **not** be used:
- Limit switches:
  - Euchner CES-A-C5E-01 with pulse signals

The following is generally valid: Input devices with mechanical contacts (relays) can be used in operating modes with or without detection of shorts across contacts, provided you comply with the technical details. It is not always possible to use input devices with semiconductor outputs when operating with detection of shorts across contacts.

Devices with OSSD semiconductor outputs
Devices with OSSD semiconductor outputs (e.g. self-testing light barriers) may only be used if the PNOZmulti is operated without detection of shorts across contacts.

ESPE
If the function of an ESPE (e.g. light barrier) is switched off via an operating mode selector switch, the supply voltage to the ESPE must be switched off at the same time.

Initial commissioning

The units must be wired and the project data must be downloaded:
- Connect the base unit and the expansion modules using the jumpers.
- Wire the inputs and outputs on the base unit and expansion modules in accordance with the circuit diagram.
- Transfer the current project on to the chip card in the base unit. To do this, either use the chip card reader or connect the computer containing PNOZmConfig to the base unit via the serial interface (see PNOZm Config online help).
- Connect the supply voltage:
  - Supply voltage for the units: Connect +24 VDC to the "A1" terminal and 0 V to the "A2" terminal on the base unit.
  - Supply voltage for the semiconductor outputs: Connect +24 VDC to the "24 V" terminal and 0 V to the "0 V" terminal on the base unit.
    Two terminals are available for each supply connection. This means that the supply voltage can be looped through several connections between the units. The current at each terminal must not exceed 9 A.

CAUTION!
After exchanging a chip card or downloading a project, it is necessary to check that the safety devices function correctly.

Recommissioning after modifications

The function of the modular safety system can be modified or expanded at any time. For example, you can add an expansion module or modify a safety function. Each time a change is made, the project data must be adapted accordingly. New units must be entered in the configurator. The

PNOZmulti modular safety system

circuit diagram must be adapted. The new project data can then be downloaded to the base unit.

CAUTION!
After exchanging a chip card or downloading a project, it is necessary to check that the safety devices function correctly.

Sequence:
If the project data is being downloaded via chip card, before commissioning you will need to make sure that the base unit on the modular safety system does not contain any project data. The project data must be cleared:

- Switch off the supply voltage.
- Remove all the connections to the terminals on the safety outputs and auxiliary outputs.
- Link terminals OA0 and I19.
- Connect the supply voltage:
  - Supply voltage for the units: Connect +24 VDC to the "A1" terminal and 0 V to the "A2" terminal on the base unit.
  - Supply voltage for the semiconductor outputs: Connect +24 VDC to the "24 V" terminal and 0 V to the "0 V" terminal on the base unit.
- Wait until the "DIAG" LED flashes.

The memory of the PNOZmulti safety system is now clear.

The units must now be wired and the project data downloaded:

- Switch off the supply voltage.
- Remove the chip card from the chip card slot.
- Remove the link between terminals OA0 and I19.
- If you wish to supplement the system using expansion modules: Connect the units using the jumpers.
- Wire the inputs and outputs on the base unit and expansion modules in accordance with the circuit diagram.
- Slide the chip card containing the current project into the card slot or insert the chip card and download the project via the RS 232 interface (see PNOZm Config. online help).
- Connect the supply voltage:
  - Supply voltage for the units: Connect +24 VDC to the "A1" terminal and 0 V to the "A2" terminal on the base unit.
  - Supply voltage for the semiconductor outputs: Connect +24 VDC to the "24 V" terminal and 0 V to the "0 V" terminal on the base unit.

pilz
more than automation
safe automation

PNOZmulti modular safety system

Function elements

The inputs on the PNOZmulti units are configured in the PNOZmulti Configurator. You can define the following:

- Switch types for various safety functions
- Connection assignment
- Detection of shorts between contacts in the input circuit
- Reset modes
- Start-up test
- Detection of shorts between contacts in the reset circuit with test pulse assignment

Some configuration options can only be selected for particular safety functions (e.g. the start-up test can only be selected for the safety gate and light curtain safety functions).

Select switch type

The PNOZmulti Configurator provides the user with various switch types for safety-related applications. The switch types that can be selected will depend on the type of input element (e.g. E-STOP, safety gate). The switches drawn below are shown in an inactivated state, e.g. with the safety gate closed or E-STOP not operated.
On switches that are monitored for simultaneity, the values for maximum on-time and maximum off-time will be the same. These values can be found in the "Description" and "Timing diagram" columns.

Switch type	Application	Description	Switch symbol	Timing diagram
1	E-STOP Enable switch	Safety contacts: 1 normally closed (N/C) without switch on/off time		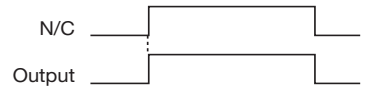
2	Safety gate	Safety contacts: 1 normally closed (N/C) 1 normally open (N/O) without switch on/off time		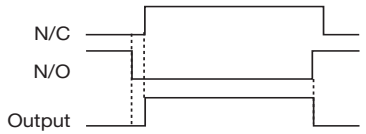
2 - Simultaneity	Safety gate	Safety contacts: 1 normally closed (N/C), 1 normally open (N/O) with switch on/off time 3 s	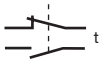	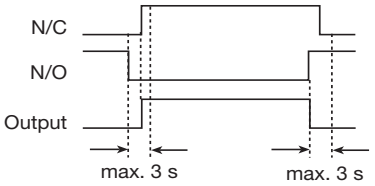
3	E-STOP Safety gate Light curtain Enable switch	Safety contacts 2 normally closed (N/C) without switch on/off time		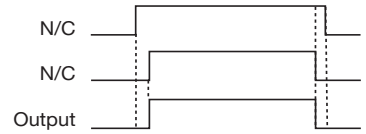
3 - Simultaneity	E-STOP Safety gate Light curtain Enable switch	Safety contacts 2 normally closed (N/C) with switch on/off time 3 s		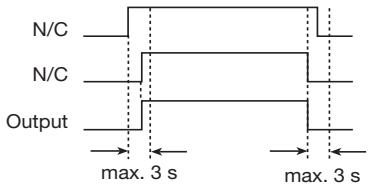

PNOZmulti modular safety system

Switch type	Application	Description	Switch symbol	Timing diagram
4	Safety gate	Safety contacts: 2 normally closed (N/C), 1 normally open (N/O) without switch on/off time	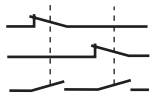	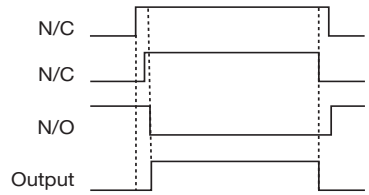
4 - Simultaneity	Safety gate	Safety contacts: 2 normally closed (N/C), 1 normally open (N/O) with switch on/off time 3 s	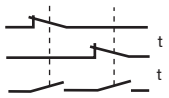	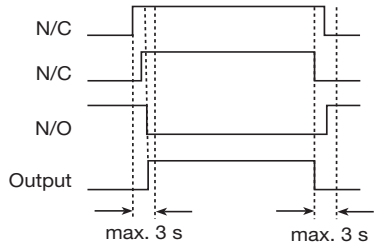
5	Safety gate	Safety contacts: 3 normally closed (N/C) without switch on/off time		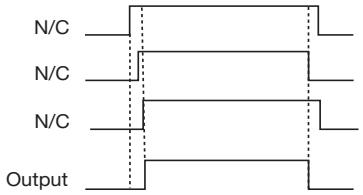
5 - Simultaneity	Safety gate	Safety contacts: 3 normally closed (N/C) with switch on/off time 3 s	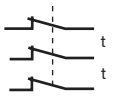	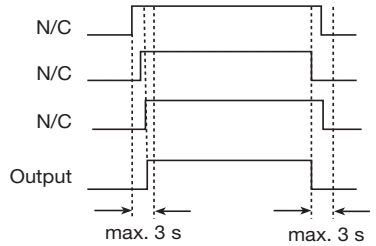

pilz
more than automation
safe automation

PNOZmulti modular safety system

Switch type	Application	Description	Switch symbol	Timing diagram
6	Two-hand button	Safety contacts: 2 changeover contacts (C/O) with simultaneity monitoring 0.5 s, off-time not monitored	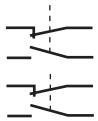	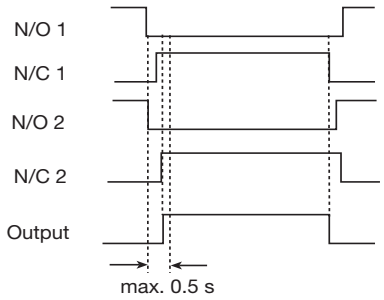
7	Two-hand button ①	Safety contacts: 2 normally open (N/O) with simultaneity monitoring 0.5 s, off-time not monitored		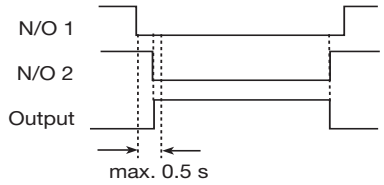
9	Operating mode	Safety contacts: Switch 1 from 2		
10	Operating mode	Safety contacts: Switch 1 from 3		
11	Operating mode	Safety contacts: Switch 1 from 4		
12	Operating mode	Safety contacts: Switch 1 from 5		

① Without test pulses: can only be used up to category 1 in accordance with EN 954-1

PNOZmulti modular safety system

Connection assignment
Inputs on the PNOZmulti units are assigned to particular safety functions (e.g. E-STOP, safety gate) in the PNOZm Config. The safety contacts must be connected to the inputs on the PNOZmulti units in accordance with their configuration.

Reset modes
A reset button triggers an enable for a safety device when all the corresponding safety switches (e.g. E-STOP) are closed. This prevents a machine starting up automatically after the supply has been interrupted or after a safety device has closed, for example.

When configuring inputs for E-STOPs, safety gates or light guards in the PNOZm Configurator, it is possible to define the reset mode:
- Automatic reset
- Manual reset
- Monitored reset

Automatic reset
With an automatic reset, the output on the function element goes to "1" when the safety switches on the input circuit are closed.

Manual reset
A N/O contact on the reset input generates the reset signal. The reset button must be operated after the safety switch has closed. The output on the function element is set to "1" when the reset button is operated (see Fig. 7-1).

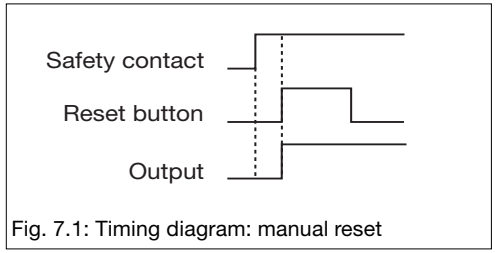

Fig. 7.1: Timing diagram: manual reset

Monitored reset
A N/O contact on the reset input generates the reset signal. The reset button must be operated after the safety switch has closed. The output on the function element is set to "1" when the reset button is released (see Fig. 7-1).

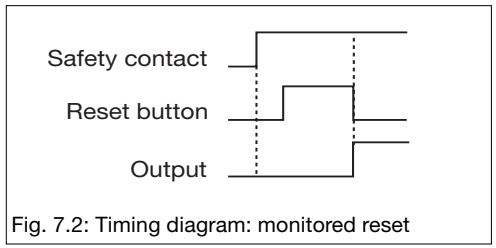

Fig. 7.2: Timing diagram: monitored reset

Reset element
The reset element in the PNOZm Configurator can be used to configure a reset button at logic level.
You can select between a monitored and a non-monitored (manual) reset. The timing diagram in Fig. 7-1 is valid for the manual reset, the timing diagram in Fig. 7-2 for the monitored reset.

Test pulses and detection of shorts across contacts
- Under certain circumstances, signal inputs with infrequent operation (constant signals) supply an unchanging signal over a long period of time. During this time, the function of the periphery devices can only be monitored to a limited extent. Faults that arise may remain undetected. Signal inputs with infrequent operation must therefore be checked via test pulses from category 2 onwards, in accordance with EN 954-1.
- Test pulses are assigned to inputs in the PNOZm Configurator. If "Detection of shorts between contacts in the input circuit" has been selected, the base unit provides 4 test pulses.
- Two-hand button: Switch type 6 contains a N/C / N/O combination per two-hand button.
  If switch type 7 is used, the two N/O contacts should use different test pulses. During configuration please refer to clause 4 of EN 574.
- Detection of shorts between contacts in the reset circuit: Monitored reset mode will detect a short across the contacts. For wiring reasons the reset circuit may also use test pulses.

CAUTION!
Test pulse outputs must only be used to test the inputs. It is **not permitted** to use them to drive loads.

Start-up test
A start-up test is available for the safety gate and light curtain safety functions. When supply voltage is removed and then re-applied, the safety gate is enabled (output on the safety gate input element = "1") only after the gate has been opened and then closed. In this way you are forced to check the correct function of the safety gate and safety gate switch.

INFORMATION
The PNOZmulti switches to a STOP condition after an error. The PNOZmulti switches back to a RUN condition when the supply voltages are switched on and off. For this reason the start-up test must be carried out again after each STOP.

PNOZmulti modular safety system

Output elements

The outputs on the PNOZmulti units are configured in the PNOZmulti Configurator. You can define the following:
- Relay
- Semiconductor
- Single-channel or redundant
- Feedback loop

INFORMATION
When establishing the reaction time of the safety device, the switch-off delay on the outputs must be taken into account (see Technical details). The switch-off delay indicates the time between the safety function on the input of the PNOZmulti unit being triggered and the output contacts switching over / the semiconductor outputs carrying a low signal.

Relays
The relay contacts meet the requirements for safe separation through increased insulation compared with all other circuits in the safety system.
Single-channel or redundant relay outputs are available. The redundant outputs are suitable for applications with a higher level of safety (for wiring options please see the chapter entitled "Unit-specific Descriptions").

NOTICE
Loads should be driven through 2 separate channels or, in the case of redundant relay outputs, shorts across contacts should be prevented e.g. by installing the safety system and its loads (contactors) in a control cabinet.
In terms of load on the relays, keep to the max. permitted operations stated in the technical details.

Semiconductors
Single-channel or redundant semiconductor outputs are available. The redundant outputs are suitable for applications with a higher level of safety (for wiring options please see the chapter entitled "Unit-specific Descriptions").

Feedback loop
The feedback loop is used to monitor the actuators that are being driven.
On a feedback loop, positive-guided N/C contacts on the driven contactors (actuators) are connected in series. If 24 VDC are present at the input on the feedback loop, all the connected contactors are de-energised. If the N/O contact on a contactor has welded, the feedback loop is not closed. The safety output will not be switched if the feedback loop is interrupted.

PNOZmulti modular safety system

When the supply voltage is switched on, the PNOZmulti safety system copies the configuration from the chip card. While this is happening, the LEDs "POWER", "DIAG", "FAULT", "IFAULT" and "OFAULT" will light. The PNOZmulti safety system is **ready for operation** when the LEDs "POWER" and "RUN" are lit continuously.

Error
The "DIAG" LED flashes as soon as an error occurs. The "RUN" LED goes out if the error leads to a safe condition.
The "RUN" LED stays lit if the error does not lead to a safe condition. The auxiliary output is shut down.

In the safe condition, the semiconductor outputs carry a low signal and the relay outputs are open.

Remedy
If an error occurs on which the "RUN" LED is lit, the error indicated through the "FAULT", "IFAULT" or "OFAULT" LED must be rectified. If the "RUN" LED goes out, once the error has been rectified, the unit can only be restarted by switching the supply voltage off and then on again.

Base unit								Exp. module		
Input Ix	RUN	DIAG	FAULT	IFAULT	OFAULT	CI	CO	FAULT	In/Out	Error
		◐								The existing user program has been deleted.
	●		☼							External error on the base unit, leading to a safe condition, e.g. terminator not connected
◐	●			☼						External fault leading to a safe condition; the fault is at the inputs whose LEDs are flashing, e.g. short across the contacts
	●				☼					External error on the outputs of the base unit, e.g. short across the contacts, leading to a safe condition
	●							☼	◐	External error leading to a safe condition; the error is at the inputs/outputs whose LEDs are flashing, e.g. short across the contacts
								☼		External error at the output
	●	◐	◐							Internal error on the base unit
	●	◐		◐						Internal error on the base unit
	●	◐			◐					Internal error on the base unit
	●	◐						◐		Internal error on the expansion module
	☼			◐						External error on the inputs of the base unit, e.g. partially operated; outputs that are driven through these inputs will switch to a safe condition, the unit remains in a RUN condition
	☼				◐					External error on the inputs of the base unit, e.g. feedback input defective; outputs that are driven through these inputs will switch to a safe condition, the unit remains in a RUN condition
	☼							◐		External error on the inputs of the base unit, e.g. partically operated, feedback input defective; outputs that are driven through these inputs will switch to a safe condition, the unit remains in a RUN condition
		☼								The base unit was set to a STOP condition by the user.
		◐								The fieldbus module has not been recognised.
	☼			☼		◐				Error on cascading input; unit remains in a RUN condition
	☼				☼		◐			Error on cascading output; unit remains in a RUN condition

Legend:
● LED off
☼ LED on
◐ LED flashes

pilz
more than automation
safe automation

PNOZmulti modular safety system

Electrical data	
Supply voltage (U_B)	24 VDC
Voltage tolerance	85 ... 120%
Residual ripple U_B	+/- 5%
Power consumption at U_B without load	Max. 8 W + 2.5 W per expansion module
Times	
Switch-on delay	5 s (after U_B is applied)
Simultaneity channel 1/2/3	3 s, two-hand control device: 0.5 s
Supply interruption before de-energisation	Min. 20 ms
Reaction times PNOZ ms1p	
f≥100 Hz	10 ms + switch-off delay PNOZ m1p
f<100 Hz	1/f + 10 ms + switch-off delay PNOZ m1p
Inputs	
Number	See unit-specific data
Voltage and current	24 VDC/8 mA
Galvanic isolation	No
Cascading input	500 VAC
Signal level at "0"	-3 ... +5 VDC
Signal level at "1"	15 ... 30 VDC
Input delay	0.6 ... 4 ms
Status display	LED
Pulsed outputs	
Number	See unit-specific data
Voltage and current	24 VDC/0.5 A
Off time during self test	< 5 ms
Galvanic isolation	No
Short circuit protection	Yes
Status display	LED
Semiconductor outputs	
Number	
for EN 954-1, 12/96, Cat. 4	See unit-specific data
for EN 954-1, 12/96, Cat. 3	See unit-specific data
Switching capability	24 VDC/max. 2 A/max. 48 W
External supply voltage (U_B)	24 VDC
Voltage tolerance	85 ... 120 %
Off time during self test	< 300 µs
Galvanic isolation	Yes
Short circuit protection	Yes
Switch-off delay	< 30 ms
Residual current at "0"	< 0.5 mA
Signal level at "1"	U_B -0.5 VDC at 2 A
Status display	LED
Max. capacitive load	2 µF
Relay outputs	
Number	
for EN 954-1, 12/96, Cat. 4	See unit-specific data
for EN 954-1, 12/96, Cat. 2	See unit-specific data
Switching capability	
in accordance with EN 60947-4-1, 02/01	AC1: 240 V/6 A/1440 VA
	DC1: 24 V/6 A/144 W
in accordance with EN 60947-5-1, 11/97	AC15: 230 V/3 A/690 VA
	DC13: 24 V/3 A/72 W
Contact fuse protection to EN 60947-5-1, 08/00	
Blow-out fuse	6 A quick or 6 A slow
Circuit breaker 24 VDC	6 A (characteristic C)
Switch-off delay	50 ms
Status display	LED
Auxiliary outputs	
Number	See unit-specific data
Voltage and current	24 VDC, max. 0.5 A
External supply voltage (U_B)	24 VDC
Voltage tolerance	85 ... 120 %
Galvanic isolation	Yes
Short circuit protection	Yes
Residual current at "0"	< 0.5 mA
Signal level at "1"	U_B -0.5 VDC at 0.5 A
Status display	LED

PNOZmulti modular safety system

Environmental data	
Airgap creepage between	DIN VDE 0110-1, 04/97
Relay contacts	3 mm
Relay contacts and other circuits	5.5 mm
Climatic suitability	DIN IEC 60068-2-3, 12/86
EMC	EN 60947-5-1, 01/00 PNOZ mc3p: EN 61000-6-2, 10/01
Vibration to	EN 60068-2-6, 04/95
Frequency	10 ... 55 Hz
Amplitude	0.35 mm
Ambient temperature	0 ... + 55 °C Coated version: 0 ... + 50 °C
Storage temperature	-25 ... + 70 °C
Mechanical data	
Protection type	
Mounting (e.g. control cabinet)	IP54
Housing	IP20
Terminals	IP20
Maximum cable runs	
Per input	1 km
Sum of individual cable runs at the test pulse output	40 km
Cross section of external conductors	
Rigid single-core, flexible multi-core or multi-core with crimp connectors	
Power supply (X7), inputs (X5, X6), semiconductor outputs (X2), test pulse outputs (X1), auxiliary output (X2), cascading output	0.5 ... 1.5 mm²
Relay outputs (X3)	0.5 ... 2.5 mm²
Flexible multi-core with crimp connectors	
Relay outputs (X3)	0.5 ... 1.5 mm²

Torque setting for connection terminals (screws)	
Power supply (X7), inputs (X5, X6), semi-conductor outputs (X2), test pulse outputs (X1), auxiliary output (X2), cascading output	0.2 ... 0.25 Nm
Relay outputs (X3)	0.4 ... 0.5 Nm
Housing material	
Front	ABS UL 94 V0
Housing	PPO UL 94 V0
Dimensions H x W x D	See unit-specific data
Weight with connector	See unit-specific data

Units from the PNOZmulti modular safety system

The previous chapters have all described the common features of the base unit and expansion modules. This chapter will deal with the specific features of each unit. Table 10-1 shows the units' most important features. The pages that follow provide information on intended use, wiring and unit-specific data for each individual unit.

PNOZmulti coated version
On the "coated version", the PCB boards in the PNOZmulti units are varnished and therefore better protected against environmental influences. The environmental conditions under which the units may be used must be checked in each individual case.
The "coated version" of the units may be mixed with all the other PNOZmulti units within a safety system. Please note that the max. ambient temperature of the overall system will only correspond to that of the PNOZmulti "coated version".

Inputs and outputs	Base unit PNOZm1p	Signal module PNOZ mc1p	Input module PNOZ mi1p	Output module PNOZ mo1p	Output module PNOZ mo2p	Output module PNOZ mo4p
Inputs	20	-	8	-	-	-
Test pulse outputs	4	-	-	-	-	-
Safety outputs using semiconductor technology						
in accordance with EN 954-1 up to Cat. 3	4	-	-	4	-	-
in accordance with EN 954-1 up to Cat. 4	2	-	-	2	-	-
Safety outputs using relay technology						
in accordance with EN 954-1 up to Cat. 2	2	-	-	-	2	4
in accordance with EN 954-1 up to Cat. 4	1	-	-	-	1	2
Auxiliary outputs	1	16	-	-	-	-

Inputs and outputs	Speed monitor PNOZms1p	Fieldbus module PNOZ mc...
Inputs	2 axes	-
Outputs	-	Fieldbus interface

Tab. 10-1: Number and type of inputs and outputs

Base unit PNOZ m1p

Intended use

The PNOZ m1p base unit from the PNOZmulti modular safety system is used for the safety-related interruption of safety circuits.
The unit is designed for use on:
- E-STOP equipment
- Safety circuits in accordance with VDE 0113 Part 1, 11/98 and EN 60204-1, 12/97 (e.g. on movable guards)

INFORMATION
The unlabelled LEDs and the LEDs at terminals A1 and A2 have no function.

Description

The basic functions of the PNOZ m1p are described in Chapter 4. Specific features are:
- 20 inputs for connecting:
  - E-STOP buttons
  - Two-hand buttons
  - Safety gate limit switches
  - Light barriers
  - Scanners
  - Enable switches
  - PSEN
  - Operating mode selector switches
- Outputs using semiconductor technology:
  - 2 safety outputs in accordance with EN 954-1, 12/96, Cat. 4 or 4 safety outputs in accordance with EN 954-1, 12/96, Cat. 3
  - 1 auxiliary output
- Relay outputs:
  1 safety contact in accordance with EN 954-1, 12/96, Cat. 4 or
  2 safety contacts in accordance with EN 954-1, 12/96, Cat. 2
- 4 test pulse outputs
- Monitors shorts across contacts at the inputs
- Monitors shorts between the safety outputs
- Weight: 530 g

Terminal configuration

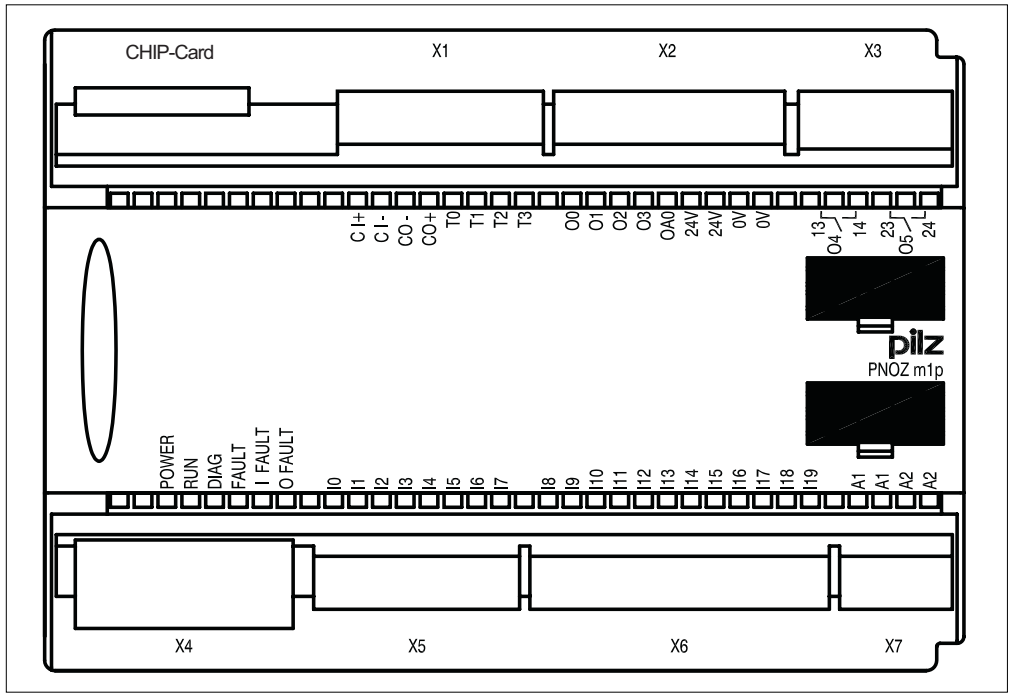

Wiring

The wiring is defined in the circuit diagram in the Configurator. There you can select the inputs that are to perform a particular safety function and the outputs that will switch this safety function.

Inputs
Inputs I0 ... I19 include the input circuits for connecting the safety elements and also the reset circuits for connecting the reset buttons. The Configurator lists the connections that are available for a safety element or reset button. You can select the required inputs from the list or leave the selection to the Configurator.
The number and assignment of the inputs depends on the type of safety elements that are used.

Outputs
Outputs O4 and O5 are relay outputs, outputs O0 to O3 are semiconductor outputs, OA0 is an auxiliary output.

Base unit PNOZ m1p

Dimensions in mm (")

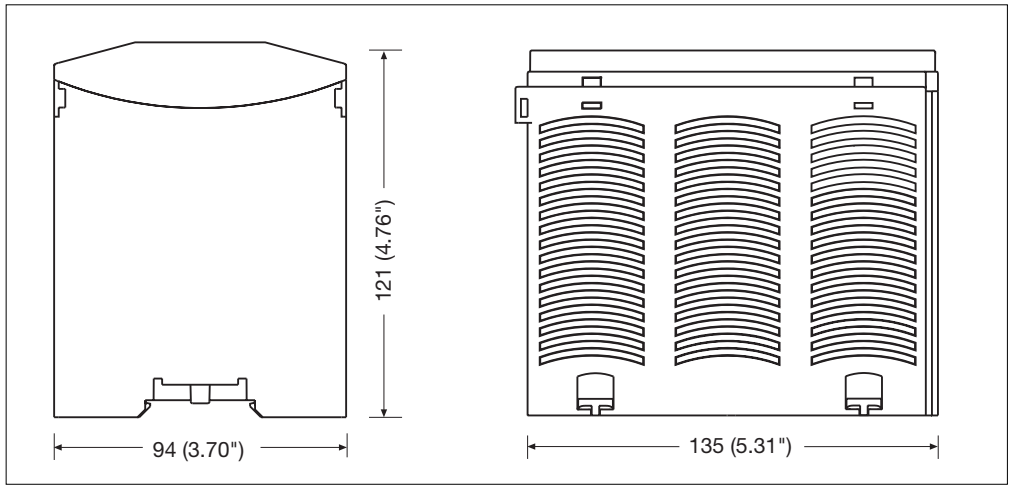

Input circuit:
The N/C contact on the trigger element (e.g. E-STOP) must be connected to the input circuit. A short circuit in the input circuit may or may not be detected, depending on the configuration and wiring. The input assignment is defined in the PNOZm Config.

- The input circuit should be connected as described in the table

Input circuit	Single-channel	Dual-channel
Without detection of shorts across contacts	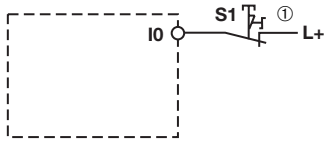	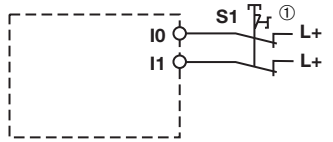
With detection of shorts across contacts	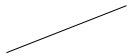	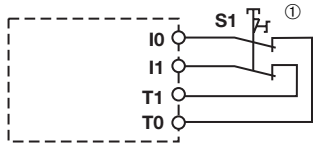

① "E-STOP" symbolises the N/C contact on the trigger element

Base unit PNOZ m1p

Reset circuit:
The unit can be reset automatically, manually or with monitoring. With a monitored or manual reset, detection of shorts across contacts can also be selected. The assignment of the reset circuit is defined in the PNOZm Config.

- The input circuit should be connected as described in the table

Outputs:
The unit has relay and semiconductor outputs. These may be configured as single-pole or redundant outputs. The output assignment is defined in the PNOZm Config.

- The output circuit should be connected as described in the table

Input circuit	Reset circuit
Without detection of shorts across contacts	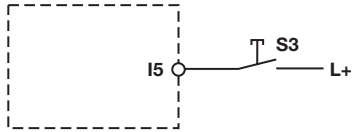
With detection of shorts across contacts	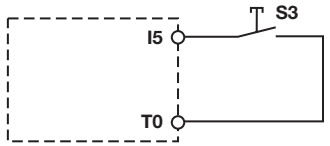

Output circuit	Semiconductor
Redundant output	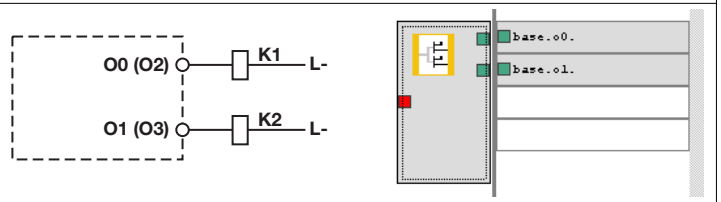
Single-pole output	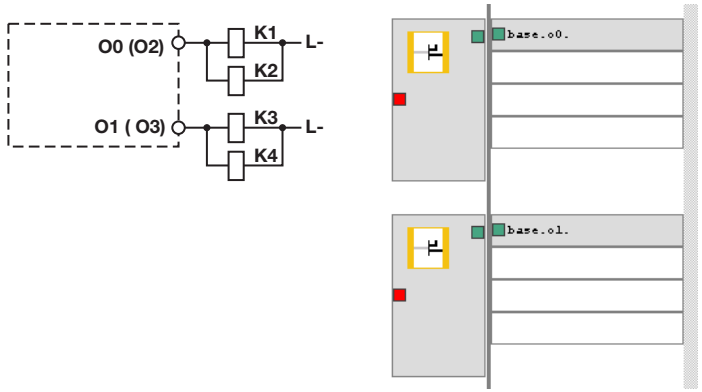

Base unit PNOZ m1p

NOTICE
Loads should be driven through 2 separate channels or, in the case of redundant relay outputs, shorts across contacts should be prevented e.g. by installing the safety system and its loads (contactors) in the same control cabinet.

Output circuit	Relay outputs
Redundant output	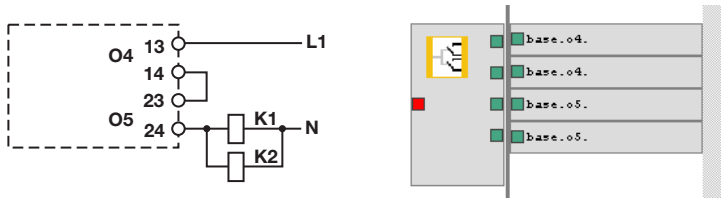
Single-pole output	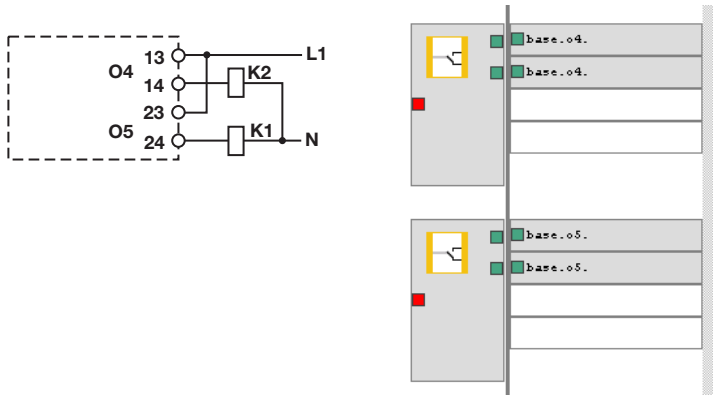

Feedback loop:
On a feedback loop, positive-guided N/C contacts on the driven contactors (actuators) are connected in series.
The assignment of the feedback loop at the input is defined in the PNOZmulti Configurator.

Output circuit	Feedback loop
Redundant output	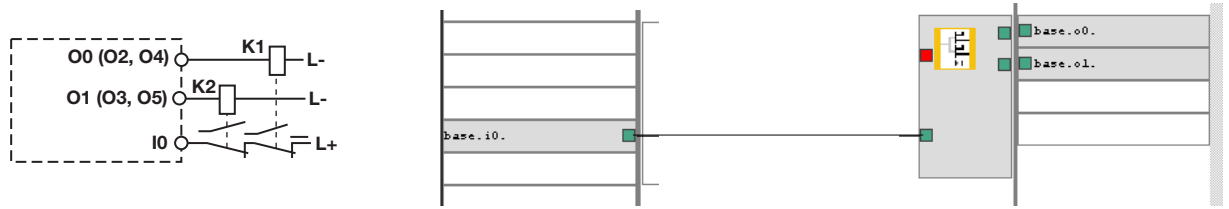

PNOZ mo1p expansion module

Intended use

The PNOZ mo1p expansion module may only be connected to a base unit (e.g. PNOZ m1p) from the PNOZmulti modular safety system. The PNOZmulti modular safety system is used for the safety-related interruption of safety circuits and is designed for use on:

- E-STOP equipment
- Safety circuits in accordance with VDE 0113 Part 1, 11/98 and EN 60204-1, 12/97 (e.g. on movable guards)

INFORMATION
The unlabelled LEDs and the LEDs at the 24 V and 0 V terminals have no function.

Description

The basic functions of the PNOZ mo1p are described in Chapter 4. Specific features are:

- Outputs using semiconductor technology:
  - 2 safety outputs in accordance with EN 954-1, 12/96, Cat. 4 or
    4 safety outputs in accordance with EN 954-1, 12/96, Cat. 3
- Max. 6 PNOZ mo1p units can be connected to the PNOZ m1p base unit
- Weight (with connector): 150 g

Terminal configuration

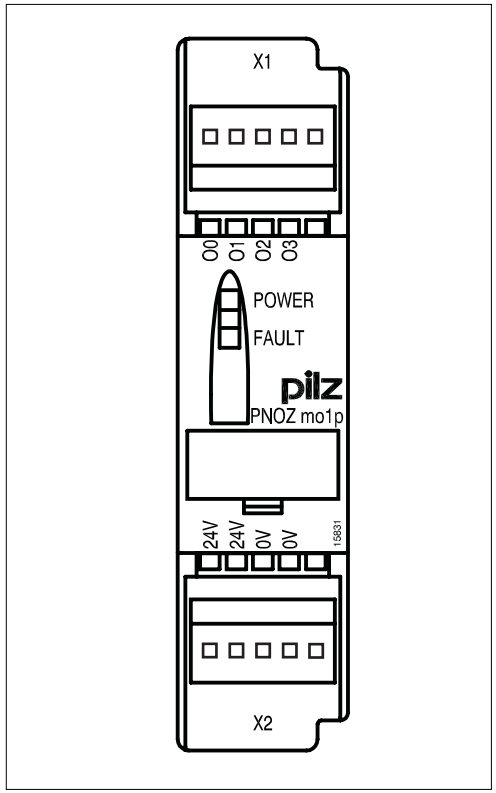

Wiring

The wiring is defined in the circuit diagram in the Configurator.

Dimensions in mm (")

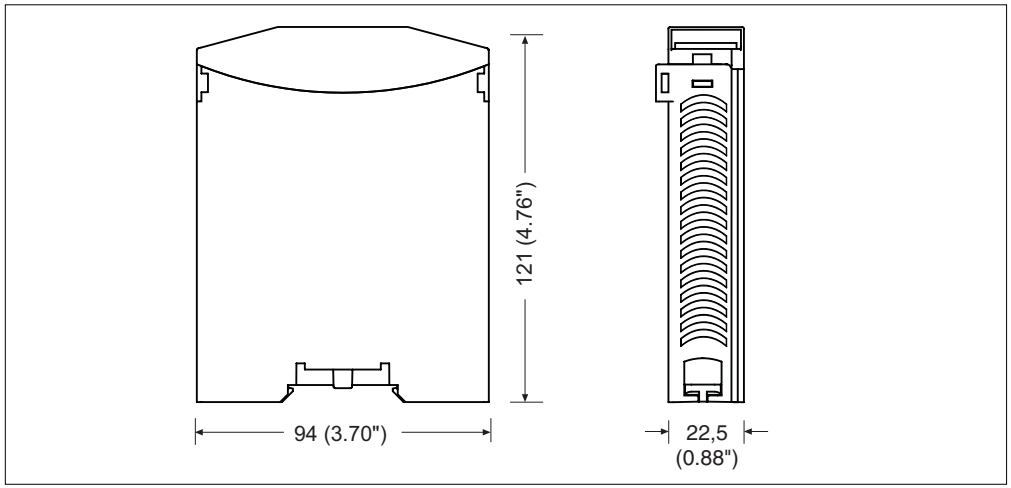

PNOZ mo1p expansion module

Supply voltage for outputs:
- Connect the supply voltage:
  24 V terminal: +24 VDC
  0 V terminal: 0V

Outputs:
The unit has 4 semiconductor outputs. These may be configured as single-pole or redundant outputs. The output assignment is defined in the PNOZm Config.

- The output circuit should be connected as described in the table

Output circuit	Semiconductor
Redundant output	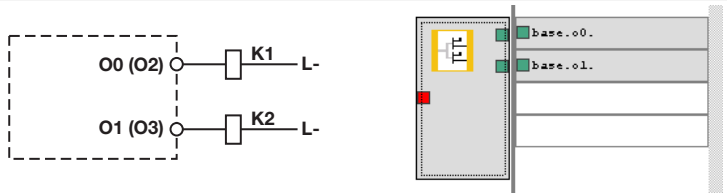
Single-pole output	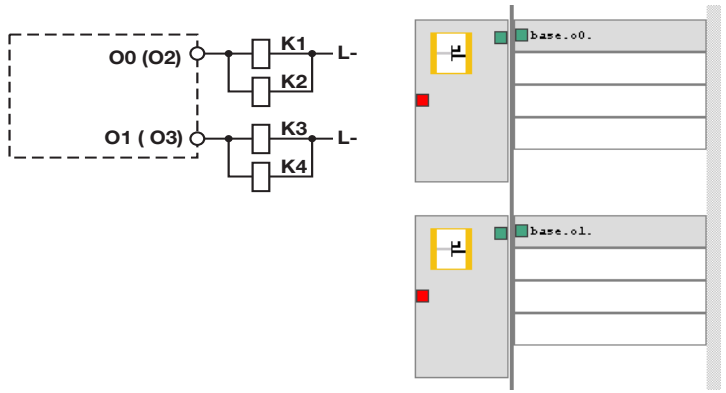

Feedback loop:
On a feedback loop, positive-guided N/C contacts on the driven contactors (actuators) are connected in series. The N/C contacts are connected to an input (e.g. on the base unit). The assignment is defined in the PNOZmulti Configurator.

Output circuit	Feedback loop
Redundant output	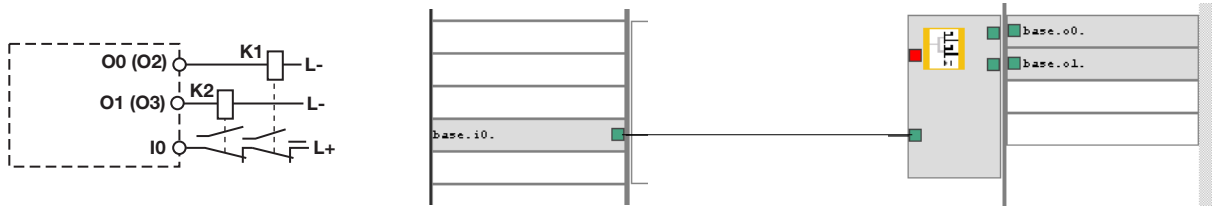

PNOZ mo2p expansion module

Intended use

The PNOZ mo2p expansion module may only be connected to a base unit (e.g. PNOZ m1p) from the PNOZmulti modular safety system. The PNOZmulti modular safety system is used for the safety-related interruption of safety circuits and is designed for use on:

- E-STOP equipment
- Safety circuits in accordance with VDE 0113 Part 1, 11/98 and EN 60204-1, 12/97 (e.g. on movable guards)

Description

The basic functions of the PNOZ mo2p are described in Chapter 4. Specific features are:

- Relay outputs:
  - 1 safety output in accordance with EN 954-1, 12/96, Cat. 4 or
    2 safety outputs in accordance with EN 954-1, 12/96, Cat. 2
- Max. 6 PNOZ mo2p units can be connected to the PNOZ m1p base unit
- Weight: 170 g

Terminal configuration

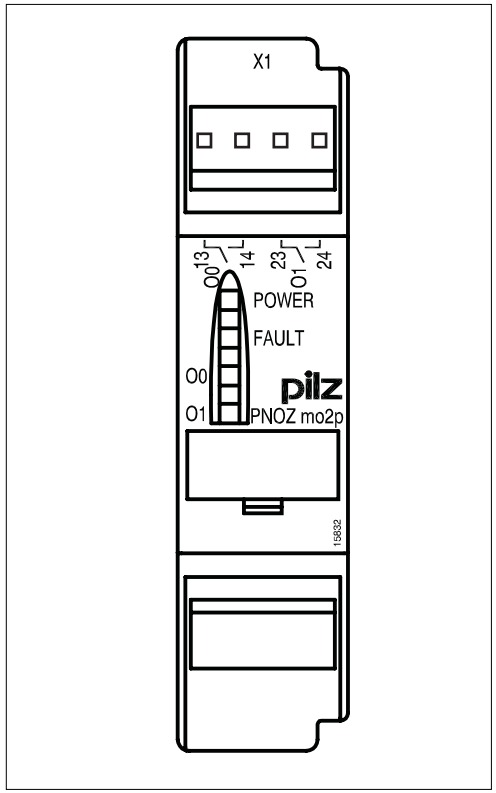

Wiring

The wiring is defined in the circuit diagram in the Configurator.

Dimensions in mm (")

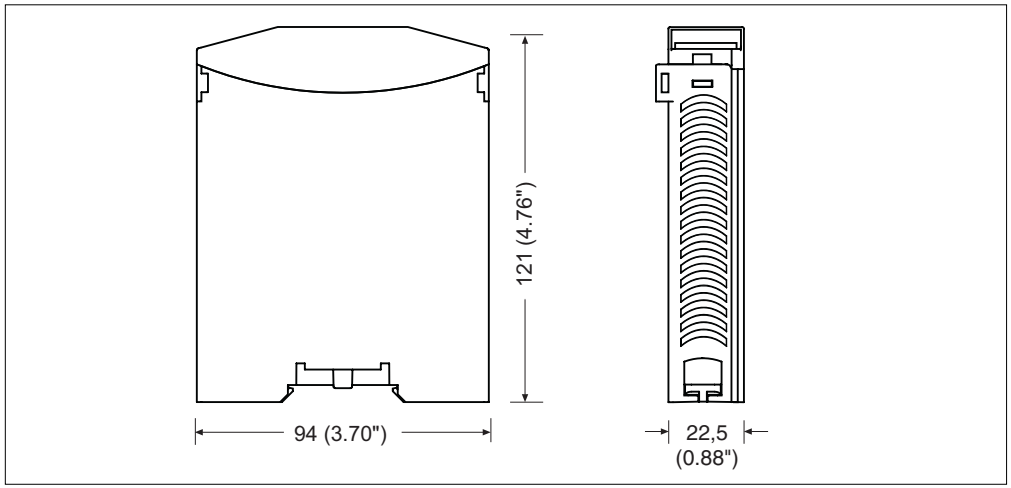

PNOZ mo2p expansion module

Outputs:
The unit has 2 relay outputs. These may be configured as single-pole or redundant outputs. The output assignment is defined in the PNOZm Config.

- The output circuit should be connected as described in the table.

NOTICE
Loads should be driven through 2 separate channels or, in the case of redundant relay outputs, shorts across contacts should be prevented e.g. by installing the safety system and its loads (contactors) in a control cabinet.

Output circuit	Relay outputs
Redundant output	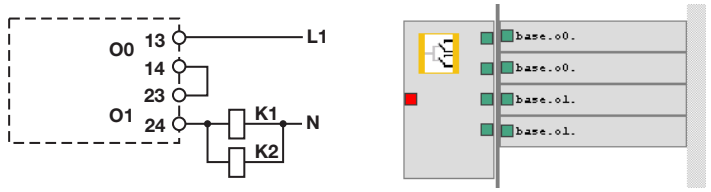
Single-pole output	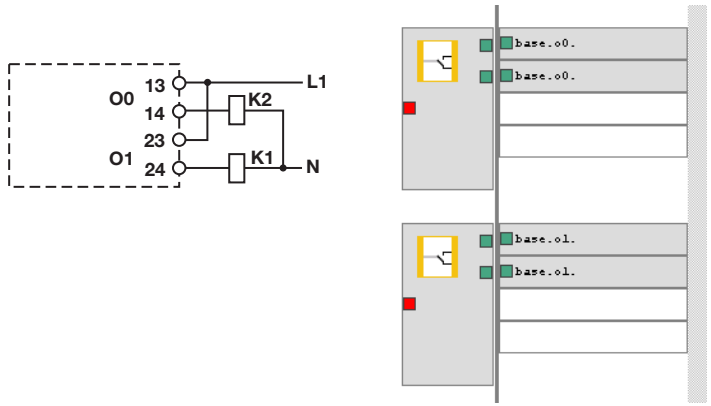

Feedback loop:
On a feedback loop, positive-guided N/C contacts on the driven contactors (actuators) are connected in series. The N/C contacts are connected to an input (e.g. on the base unit). The assignment is defined in the PNOZmulti Configurator.

Output circuit	Feedback loop
Redundant output	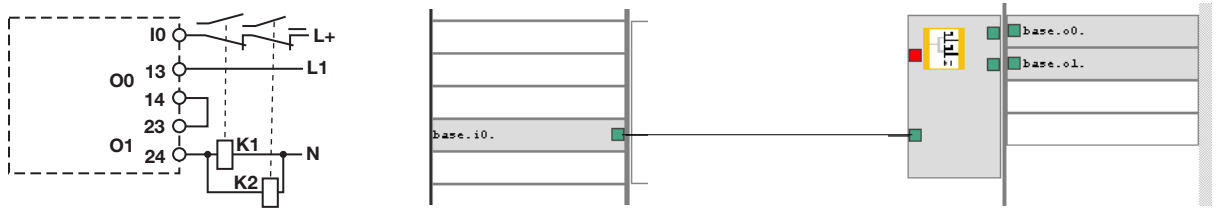

PNOZ mi1p expansion module

Intended use

The PNOZ mi1p expansion module may only be connected to a base unit (e.g. PNOZ m1p) from the PNOZmulti modular safety system. The PNOZmulti modular safety system is used for the safety-related interruption of safety circuits and is designed for use on:

- E-STOP equipment
- Safety circuits in accordance with VDE 0113 Part 1, 11/98 and EN 60204-1, 12/97 (e.g. on movable guards)

Description

The basic functions of the PNOZ mi1p are described in Chapter 4. Specific features are:

- 8 inputs for connecting:
  - E-STOP buttons
  - Two-hand buttons
  - Safety gate limit switches
  - Light barriers
  - Scanners
  - Enable switches
  - PSEN
  - Operating mode selector switches
- Monitors shorts across contacts at the inputs
- Max. 8 PNOZ mi1p units can be connected to the PNOZ m1p base unit
- Weight (with connector): 130 g

Terminal configuration

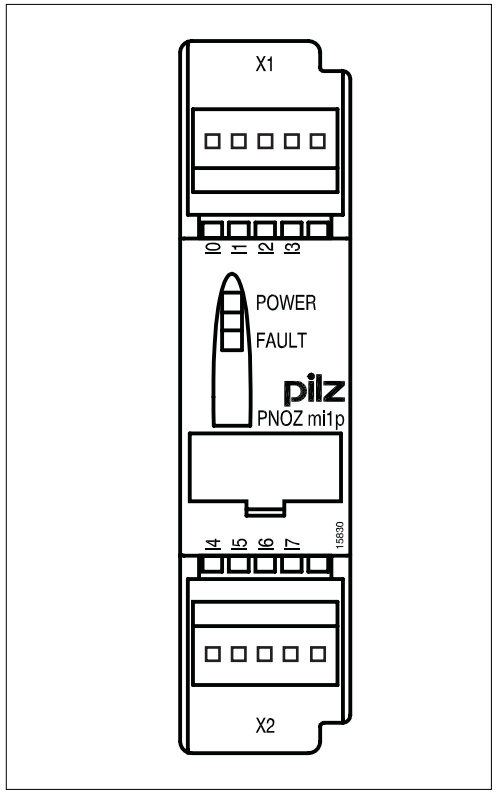

Wiring

The wiring is defined in the circuit diagram in the Configurator.

Dimensions in mm (")

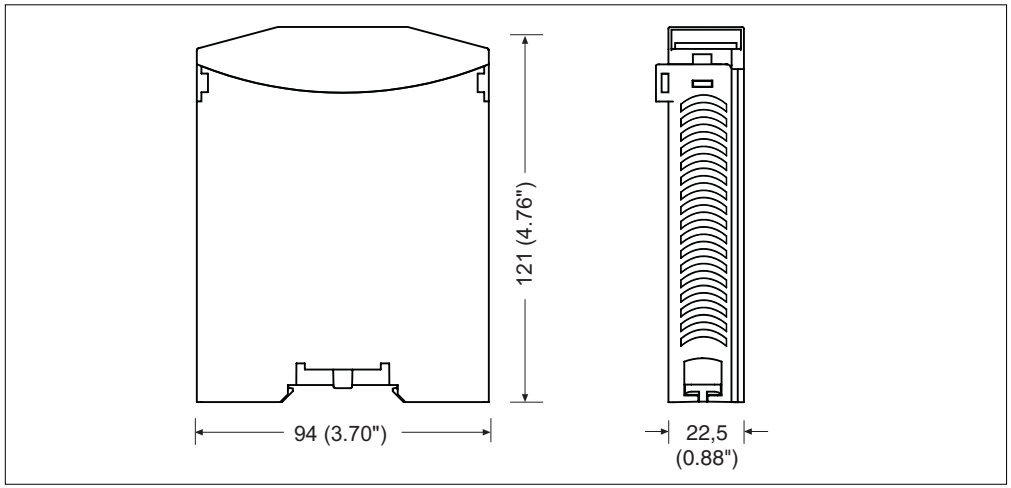

PNOZ mi1p expansion module

Input circuit:
The N/C contact on the trigger element (e.g. E-STOP) must be connected to the input circuit. A short circuit in the input circuit may or may not be detected, depending on the configuration and wiring. The test pulse outputs on the base unit must be used to detect shorts across contacts. The input assignment is defined in the PNOZm Config.

- The input circuit should be connected as described in the table. The wiring at I0 and I1 is illustrated as an example; inputs I2 ... 17 are wired in a similar way.

Input circuit	Single-channel	Dual-channel
Without detection of shorts across contacts	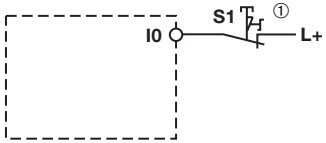	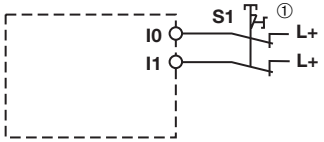
With detection of shorts across contacts	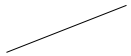	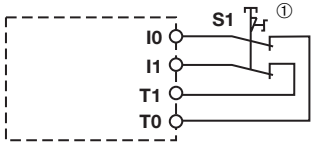

① "E-STOP" symbolises the N/C contact on the trigger element

Pilz GmbH & Co. KG, Safe Automation, Felix-Wankel-Straße 2, 73760 Ostfildern, Germany, Telephone: +49 711 3409-0, Telefax: +49 711 3409-133, E-Mail: pilz.gmbh@pilz.de

PNOZ mc1p expansion module

Intended use

The PNOZ mc1p expansion module may only be connected to a base unit (e.g. PNOZ m1p) from the PNOZmulti modular safety system. The PNOZ mc1p exclusively provides auxiliary outputs.

CAUTION!
Auxiliary outputs may **not** be used for safety-related functions.

INFORMATION
The LEDs at the 24 V and 0 V terminals have no function.

Description

The basic functions of the PNOZ mc1p are described in Chapter 4. Specific features are:

- 16 auxiliary outputs
- Max. 8 PNOZ mc1p units can be connected to the PNOZ m1p base unit
- Weight (with connector): 185 g

Terminal configuration

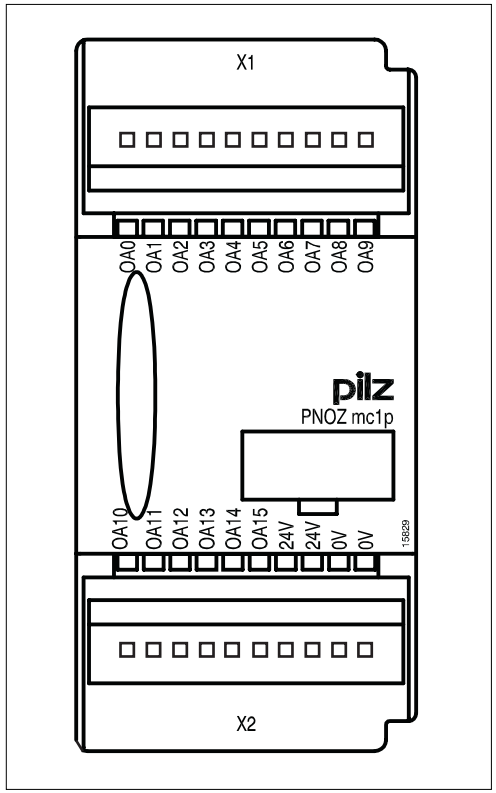

Wiring

The wiring is defined in the circuit diagram in the Configurator.

Dimensions in mm (")

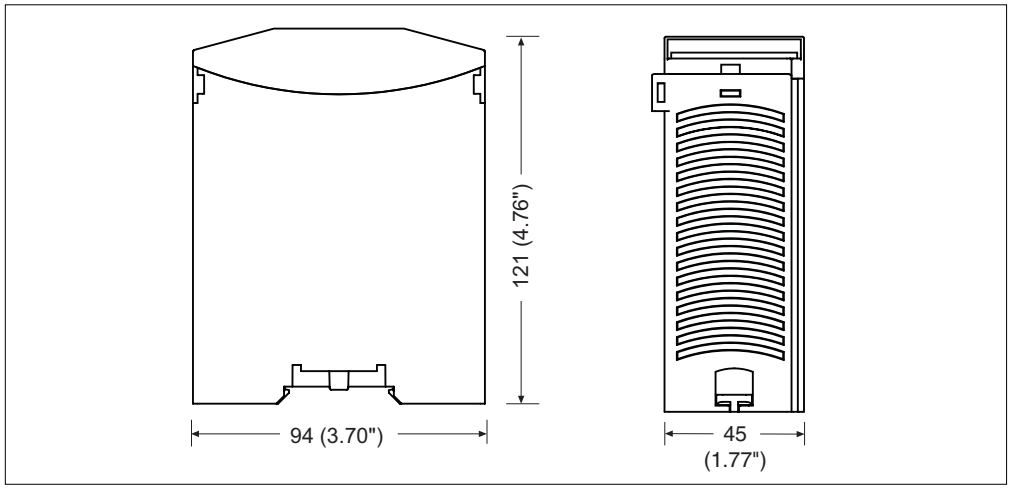

PNOZ mc1p expansion module

Supply voltage for auxiliary outputs:
- Connect the supply voltage:
  24 V terminal: +24 VDC
  0 V terminal: 0V

Auxiliary outputs:
The auxiliary outputs can be used for communication with a PLC or text display, for example. The output assignment is defined in the PNOZm Config.

- The output circuit should be connected as described in the table

Output circuit

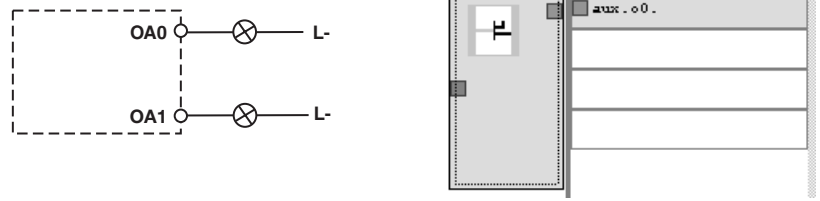

PNOZ mo4p expansion module

Intended use

The PNOZ mo4p expansion module may only be connected to a base unit (e.g. PNOZ m1p) from the PNOZmulti modular safety system. The PNOZmulti modular safety system is used for the safety-related interruption of safety circuits and is designed for use on:

- E-STOP equipment
- Safety circuits in accordance with VDE 0113 Part 1, 11/98 and EN 60204-1, 12/97 (e.g. on movable guards)

Description

The basic functions of the PNOZ mo4p are described in Chapter 4. Specific features are:

- Relay outputs:
  - 2 safety outputs in accordance with EN 954-1, 12/96, Cat. 4 or
    4 safety outputs in accordance with EN 954-1, 12/96, Cat. 2
- Max. 6 PNOZ mo4p units can be connected to the PNOZ m1p base unit
- Weight: 205 g

Terminal configuration

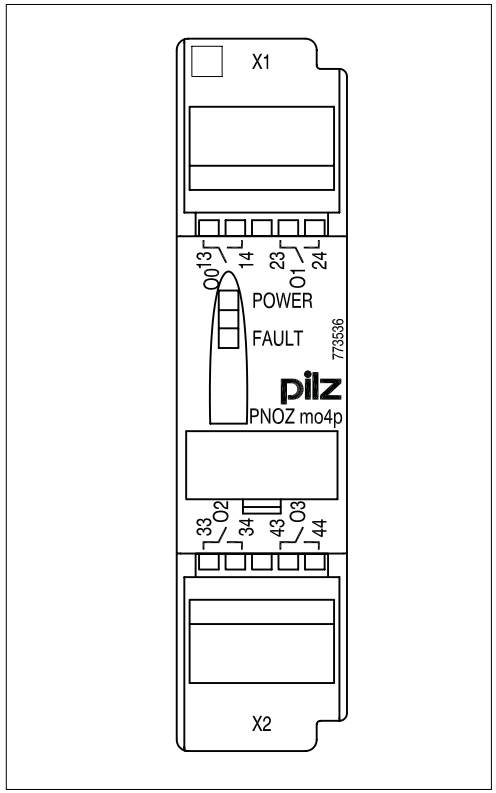

Wiring

The wiring is defined in the circuit diagram in the Configurator.

Dimensions in mm (")

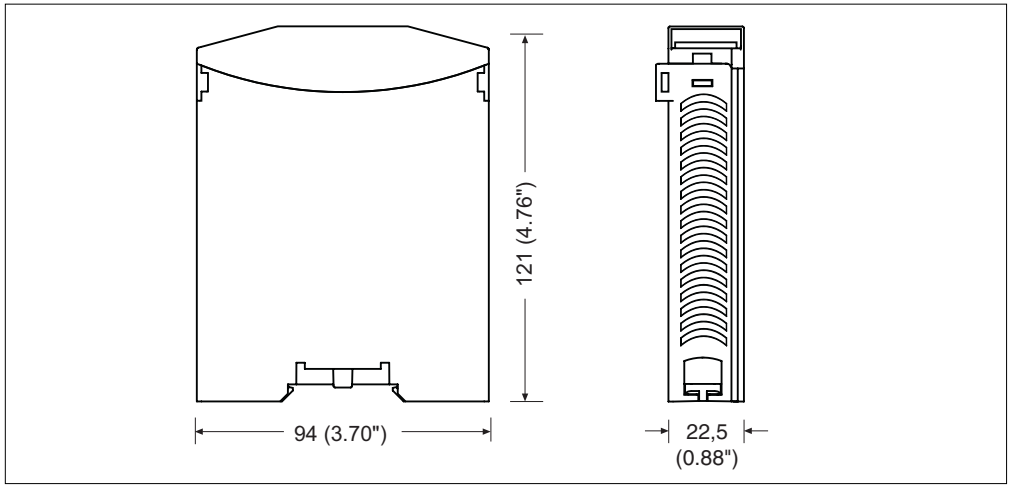

PNOZ mo4p expansion module

Outputs:
The unit has 4 relay outputs. These may be configured as single-pole or redundant outputs. The output assignment is defined in the PNOZm Config.

- The output circuit should be connected as described in the table.

NOTICE
Loads should be driven through 2 separate channels or, in the case of redundant relay outputs, shorts across contacts should be prevented e.g. by installing the safety system and its loads (contactors) in a control cabinet.

Output circuit	Relay outputs
Redundant output	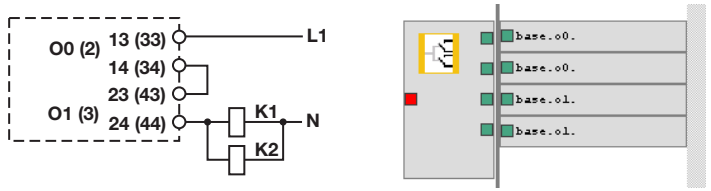
Single-pole output	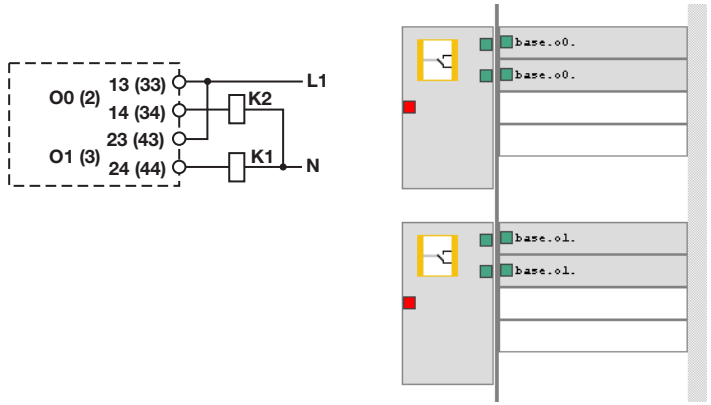

Feedback loop:
On a feedback loop, positive-guided N/C contacts on the driven contactors (actuators) are connected in series. The N/C contacts are connected to an input (e.g. on the base unit). The assignment is defined in the PNOZmulti Configurator.

Output circuit	Feedback loop
Redundant output	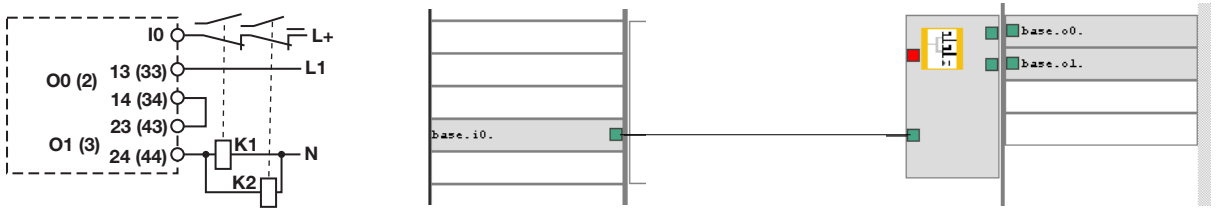

PNOZ ms1p expansion module

Intended use

The **PNOZ ms1p** speed monitor may only be connected to a base unit (e.g. PNOZ m1p) from the PNOZmulti modular safety system. It monitors standstill, speed and direction of rotation up to category 3 in accordance with EN 954-1.
The PNOZmulti modular safety system is used for the safety-related interruption of safety circuits and is designed for use on:
- Emergency stop equipment
- Safety circuits in accordance with VDE 0113 Part 1, 11/98 and EN 60204-1, 12/97 (e.g. on movable guards)

WARNING!
Users must take appropriate measures to detect or exclude errors (e.g. slippage or broken shearpin) which mean that the frequency of the input device signal is no longer proportional to the monitored speed.

System requirements
- PNOZmulti Configurator: from Version 3.0.0
- PNOZ m1p: from Version 3.0

Please contact Pilz if you have an older version.

Description

The PNOZ ms1p speed monitor can monitor two axes independently for standstill, speed and direction of rotation. The PNOZ ms1p signals the status of the monitored values to the base unit. Depending on the safety circuit that is loaded, it may be possible to transmit the values from the base unit to a relay output on the safety system, for example.
Incremental encoders and/or proximity detectors can be used to record the values.

INFORMATION
Monitoring the direction of rotation: If an internal error occurs or there is an error due to a defective incremental encoder (LED "FAULT" is lit), an incorrect direction of rotation may be registered for ca. 500 ms.

Module features:
- Monitors 2 independent axes
- Connection of
  - 2 incremental encoders
  - or
  - 4 proximity switches (2 proximity switches per axis)
  - or
  - 1 incremental encoder on axis 1 and 2 proximity switches on axis 2
  - or
  - 1 incremental encoder on axis 2 and 2 proximity switches on axis 1
- Measured variables:
  - standstill
  - speed (8 values can be set)
  - direction of rotation
- Axis types, input device types and reset mode can be selected in the PNOZm Config
- Status indicators for
  - supply voltage
  - incremental encoder
  - proximity switch
  - axis status, standstill and excess speed
  - error on the system
- Connection technology on proximity switch: plug-in terminals, either with cage clamp connection or screw connection
- Connection technology on incremental encoder: RJ-45 female connector
- Galvanic isolation of female connector and terminals
- Max. of 4 speed monitors can be connected to the PNOZ m1p base unit
- Weight (with jumpers): 250 g

Terminal configuration

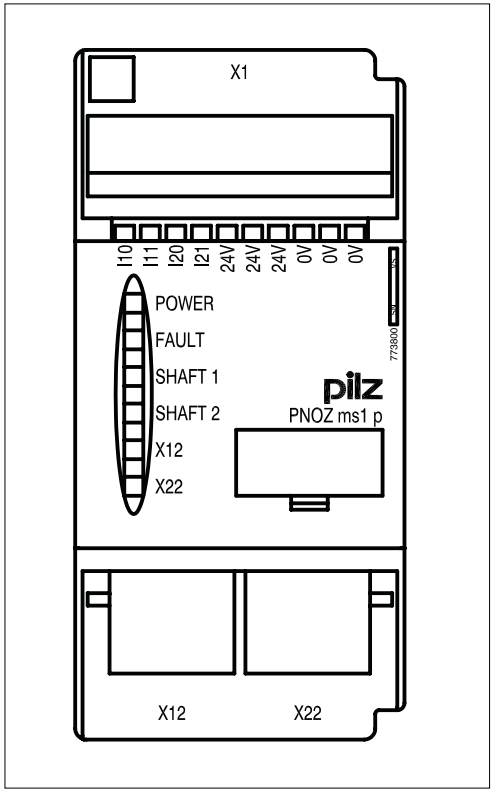

PNOZ ms1p expansion module

Dimensions in mm (")

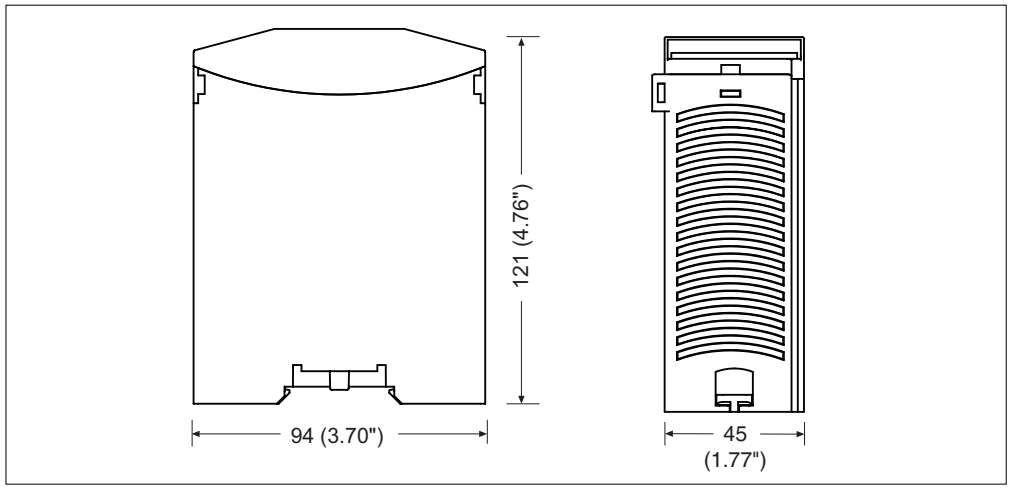

Wiring

The wiring is defined in the circuit diagram in the Configurator. Details of the input type, axis type and reset mode, plus the values for standstill, speed monitoring and direction of rotation are also defined in the PNOZm Config.

Proximity switches

- Only "pnp" type proximity switches may be used (N/O contact, positive-switching)
- The proximity switches must be positioned in such a way that at least one is energised (carries a high signal).
- The proximity switches must be offset in such a way that the recorded signals overlap.

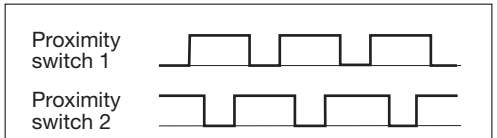

Fig. 10-1: Example of the signal behaviour of the proximity switches

Requirements of the proximity switches

Signal level at the outputs	
High signal	11 V 30 V
Low signal	-3 V ... +5 V
Input resistance at I10 ... I21	3 kOhm
Frequency range	0 ... 3 kHz
Connection technology	Cage clamp terminals or screw terminals
Cross section of external conductors	
Rigid single-core, flexible multi-core or multi-core with crimp connectors	0.5 ... 2.5 mm^2
Flexible multi-core with crimp connectors	0.5 ... 1.5 mm^2

CAUTION!
Appropriate installation measures should be taken to prevent a foreign body coming between the signal input device and the proximity switch. The foreign body could cause one of the proximity switches to be constantly energised (constant high signal).

The outputs of both the proximity switches for axis 1 are connected to terminals I10 and I11; both the outputs of the proximity switches for axis 2 are connected to terminals I20 und I21. If only one axis is to be monitored, either terminals I10 and I11 or terminals I20 and I21 will remain free. The proximity switch must always be connected to a 0 V terminal on the PNOZ ms1p. The 0 V terminals are linked internally.

The proximity switches require a 24 VDC supply. To reduce the amount of wiring involved, this supply voltage can be connected to one of the "24 V" terminals on the PNOZ ms1p. As all 3 "24 V" terminals are linked internally, 24 V will be present at all 3 terminals. The proximity switches can therefore be connected directly to the 24 V terminals on the PNOZ ms1p, rather than the power supply.

PNOZ ms1p expansion module

Connection of 4 proximity switches, central supply voltage

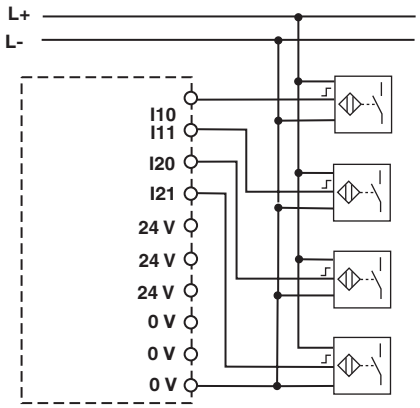

Connection of 4 proximity switches, supply voltage via PNOZ ms1p

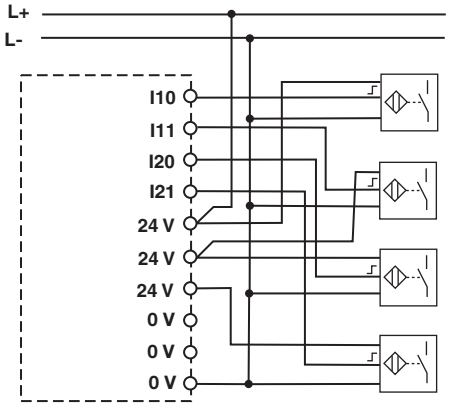

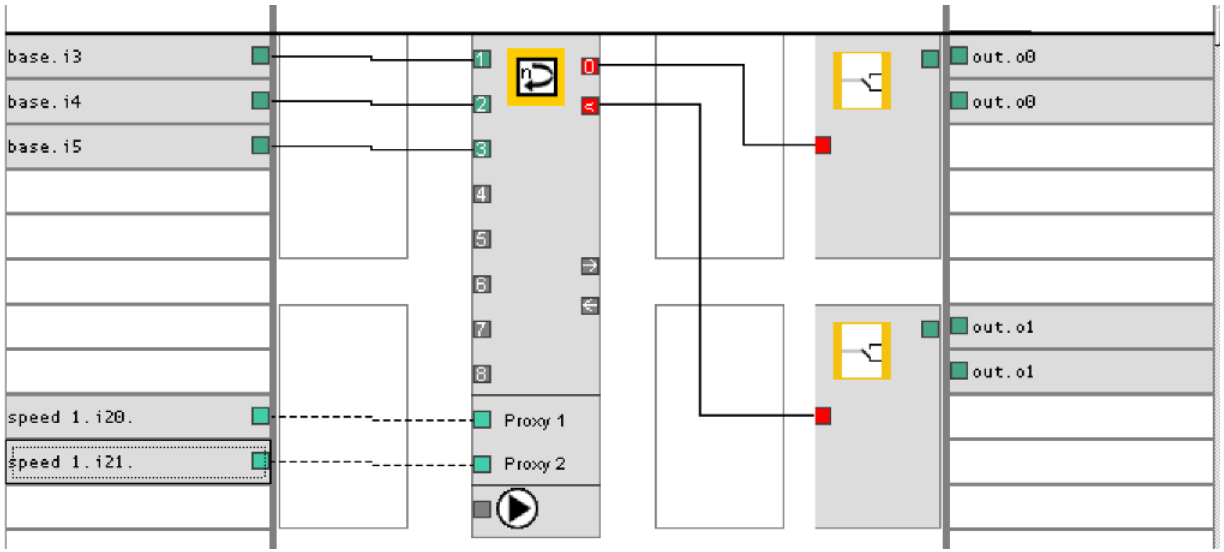

PNOZ ms1p expansion module

Incremental encoders

- Only incremental encoders with a differential output of the following type are permitted:
  - Sin/Cos
  - TTL (RS 422)
- Please note the values stated in the technical details.

The incremental encoders are connected via an adapter (e.g. PNOZ msi4p) or are connected directly to the PNOZ ms1p. The adapter is connected between the incremental encoder and the drive. The output on the adapter is connected to the RJ-45 female connector on the PNOZ ms1p. The incremental encoder on connector X12 monitors axis 1; the incremental encoder on connector X22 monitors axis 2.

Pin assignment on connectors X12 and X22:

Pin	Assignment
1	+5 VDC
2	0 V
3	Not assigned
4	A
5	/A
6	Not assigned
7	B
8	/B
Screening	S

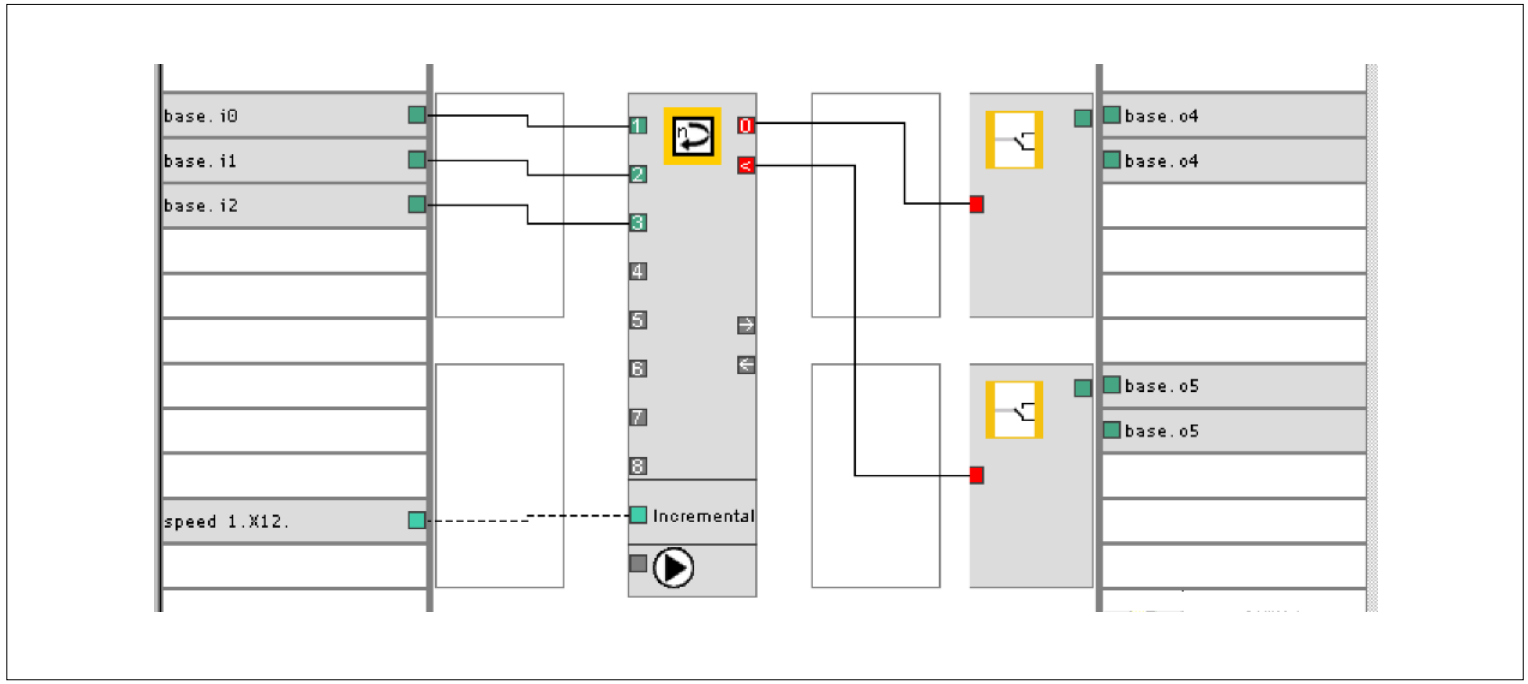

Requirements of the incremental encoders

Signal level at the inputs	0 ... +5 V, overload-proof up to -30 V .... +30 V
Differential signal	+/-0.2 V ... +/-5 V
Supply voltage	+5 V +/-10 %
Input resistance at X12, X22	10 kOhm
Frequency range	0 ... 500 kHz
Connection technology	RJ-45 female connector

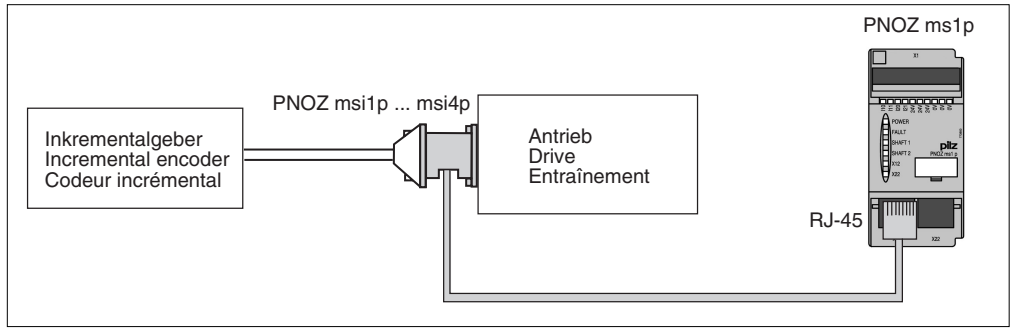

PNOZ ms1p expansion module

Adapter for incremental encoders

The adapter records the data between the incremental encoder and the drive and makes it available via the RJ-45 female connector on the PNOZms1p. Users can make this adapter themselves or use existing adapters. Pilz supplies complete adapters as well as ready-made cable with RJ-45 female connectors, which can be used when making an individual adapter. The range of products in this area is constantly being expanded. Please contact us about the range of adapters that is currently available.

PNOZ msi11p/msi10p cable

The cable connects the output on the incremental encoder to the RJ-45 connector on the PNOZ ms1p. The cable cores are strands with crimp connectors. The cable cores are labelled. An RJ-45 connector is used for connection to the PNOZ ms1p.

Pin assignment of the RJ-45 connector:

Pin	Assignment
1	UB
2	0 V
3	Not assigned
4	A
5	/A
6	Not assigned
7	B
8	/B
Screening	S

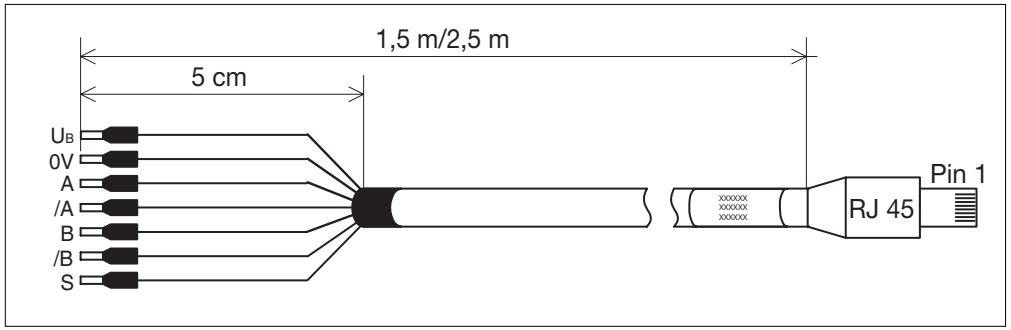

Technical details

Cable runs	
PNOZ msi11p	1.5 m
PNOZ msi10p	2.5 m
Cable	CAT5 cable, flexible, silicone-free
Temperature resistance of insulation material	Max. 60 °C
Adapter connection	Strands with crimp connectors
PNOZ ms1p connection	RJ-45 connector, 8-pin

PNOZ ms1p expansion module

PNOZ msi1p ... PNOZ msi4p adapter for Siemens or Haidenhain

These adapters are designed for the drives from Siemens or Haidenhain (for further information please refer to the drives' documentation). One is connected via a female D-Sub connector, one via a male D-Sub connector. Various versions are available:

- PNOZ msi1p
  25-pin D-Sub connector and cable runs of 2.5 m
- PNOZ msi2p
  25-pin D-Sub connector and cable runs of 1.5 m
- PNOZ msi3p
  15-pin D-Sub connector and cable runs of 2.5 m
- PNOZ msi4p
  15-pin D-Sub connector and cable runs of 1.5 m

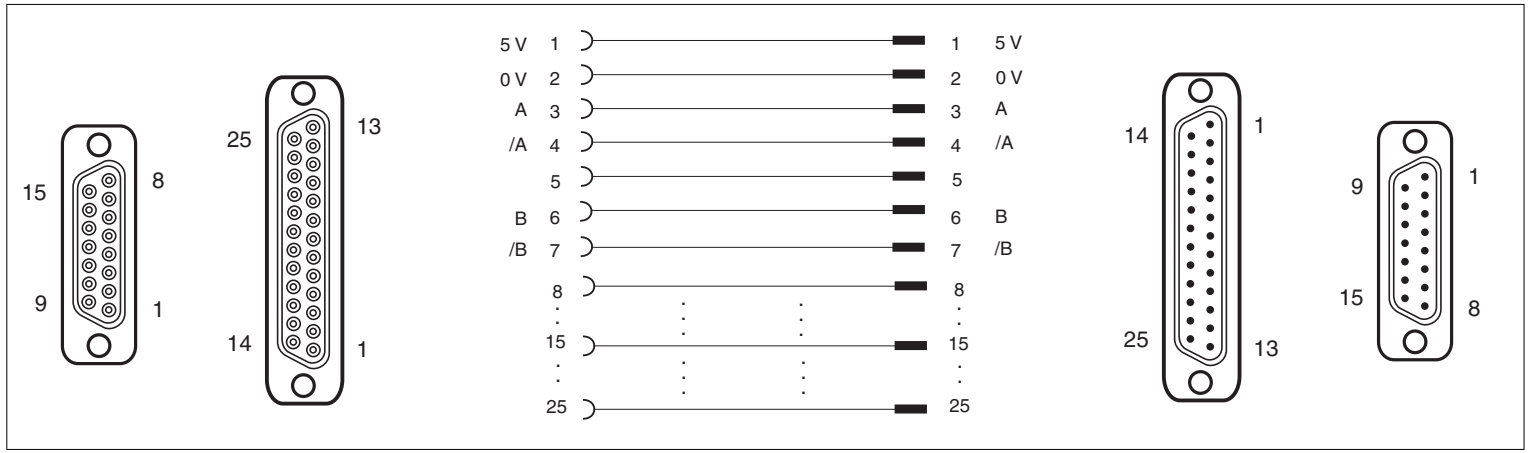

PNOZ ms1p expansion module

Technical details

Climatic suitability in accordance with EN 60068-2-78	40 °C, 93 % r.h.
Condensation	Not permitted
Ambient temperature	0 ... +60° C
Storage temperature	-25 ... 70 ° C
Protection type	IP20
Housing material	PBT
Dimensions H x W x D	See drawing
Length L	1.5 m or 2.5 m
Weight	PNOZ msi1p: 190 g PNOZ msi2p: 135 g PNOZ msi3p: 175 g PNOZ msi4p: 120 g

Dimensions

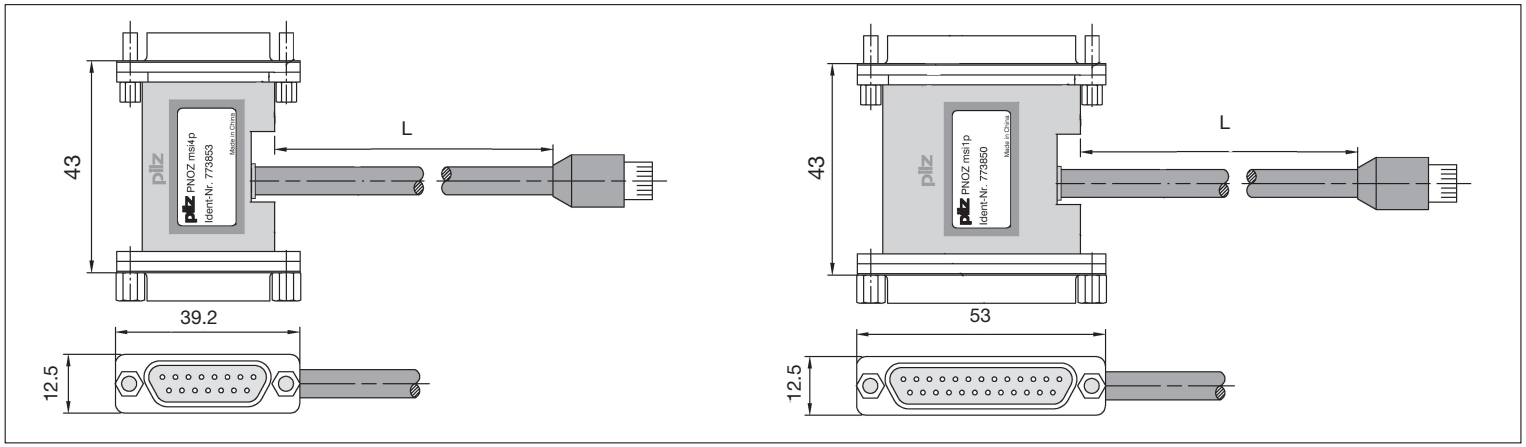

PNOZ mc3p expansion module

Intended use

The **PNOZ mc3p** expansion module may only be connected to a base unit (e.g. PNOZ m1p) from the PNOZmulti modular safety system. It is used for communication between the modular safety system and PROFIBUS-DP.

CAUTION!
The PNOZ mc3p expansion module may not be used for safety-related functions.

System requirements

- PNOZmulti Configurator: from Version 3.0.0
- PNOZ m1p: from Version 3.0

Please contact Pilz if you have an older version.

Description

PROFIBUS-DP is designed for fast data exchange at field level. The PNOZ mc3p expansion module is a passive PROFIBUS-DP subscriber (Slave). The basic functions of communication with PROFIBUS-DP conform to EN 50170. The central controller (Master) reads input information from the slaves and writes output information to the slaves as part of each cycle. As well as the cyclical transfer of usable data, PROFIBUS-DP can also be used for diagnostics and commissioning functions. Data traffic is monitored on the Master/Slave side.

Module features:

- Can be configured using the PNOZmulti Configurator
- Station addresses from 0 ... 99, selected via rotary switch
- Status indicators for communication with PROFIBUS-DP and for errors
- Max. 1 PNOZ mc3p can be connected to the PNOZ m1p base unit
- Weight (with jumper): 140 g

A maximum of 24 outputs on the PNOZmulti safety system can be defined in the PNOZm Config for communication with PROFIBUS-DP. These outputs can be connected to the outputs on

- Logic elements
- Time elements
- Event counters
- Connection points

and to inputs on the safety system.

Terminal configuration

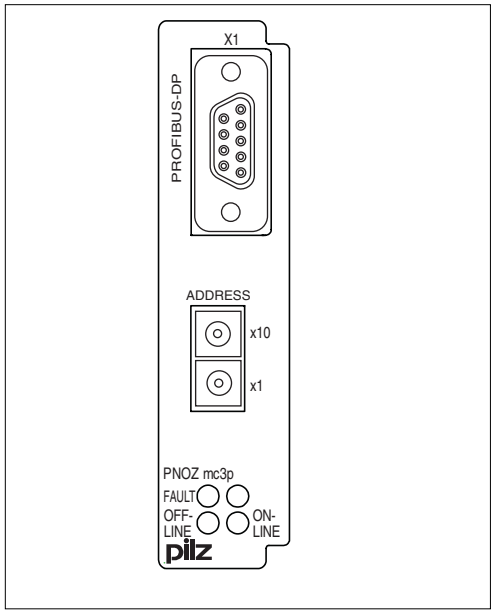

PNOZ mc3p expansion module

Dimensions in mm (")

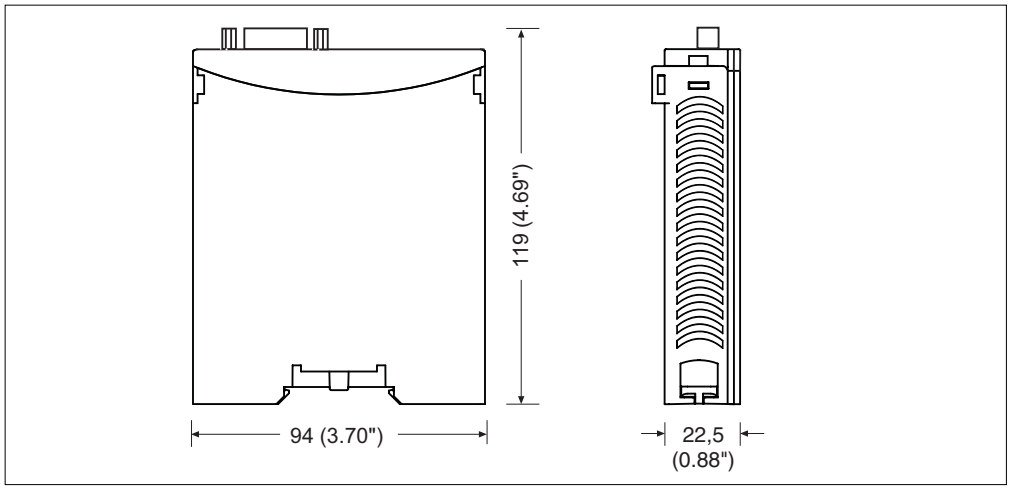

CAUTION!
The PNOZ mc3p expansion module must always be installed to the left of the base unit.
A distance of at least 20 mm must be maintained between the PNOZ mc3p and any external heat sources.

Wiring

The wiring is defined in the circuit diagram in the Configurator. It is possible to define which outputs on the safety system will communicate with PROFIBUS-DP. The connection to PROFIBUS-DP is made via a female 9-pin D-Sub connector.

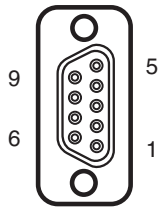

1: Not assigned
2: Not assigned
3: B (RxD/TxD-P)
4: CNTR-P
5: DGND
6: VP
7: Not assigned
8: A (RxD/TxD-N)
9: Not assigned

PNOZ mc3p technical details

Application range	Non-safety-related applications
Device type	Slave
Status display	LED
Station address	0 ... 99
Transmission rate	9.6 kBit/s ... 12 MBit/s
Connection	9-pin D-Sub connector (female)

PNOZ mc3p expansion module

Please note the following when connecting to PROFIBUS:
- Only use metal plugs or metallised plastic plugs.
- Twisted pair, screened cable must be used to connect the interfaces.

Setting the station address
Two rotary switches are used to set the station address (decimal) on the PNOZ mc3p.
- On the upper rotary switch, use a small screwdriver to set the tens digit for the address.


x10

- On the lower rotary switch, set the ones digit for the address (“6” in the example).


x1

Station address 36 is set in the diagrams as an example.

Pilz GmbH & Co. KG, Safe Automation, Felix-Wankel-Straße 2, 73760 Ostfildern, Germany, Telephone: +49 711 3409-0, Telefax: +49 711 3409-133, E-Mail: pilz.gmbh@pilz.de

PNOZ mc4p expansion module

Intended use

The **PNOZ mc4p** expansion module may only be connected to a base unit (e.g. PNOZ m1p) from the PNOZmulti modular safety system. It is used for communication between the modular safety system and DeviceNet.

CAUTION!
The PNOZ mc4p expansion module may not be used for safety-related functions.

System requirements

- PNOZmulti Configurator: from Version 3.0.0
- PNOZ m1p: from Version 3.0

Please contact Pilz if you have an older version.

Description

DeviceNet is designed for fast data exchange at field level. The PNOZ mc4p expansion module is a passive DeviceNet subscriber (Slave). The basic communication functions meet the requirements of the DeviceNet specification, Release 2.0. The central controller (master) reads input information from the slaves and writes output information to the slaves as part of each cycle. As well as the cyclical transfer of usable data, the PNOZ mc4p can also be used for diagnostics and commissioning functions.

Module features:

- Can be configured using the PNOZmulti Configurator
- Station addresses from 0 ... 63, selected via DIP switch
- Status indicators for communication with DeviceNet and for errors
- Max. 1 PNOZ mc4p can be connected to the PNOZ m1p base unit
- Weight (with jumper): 146 g

A maximum of 24 outputs on the PNOZmulti safety system can be defined in the PNOZm Config for communication with DeviceNet. These outputs can be connected to the outputs on

- Logic elements
- Time elements
- Event counters
- Connection points

and to inputs on the safety system.

Terminal configuration

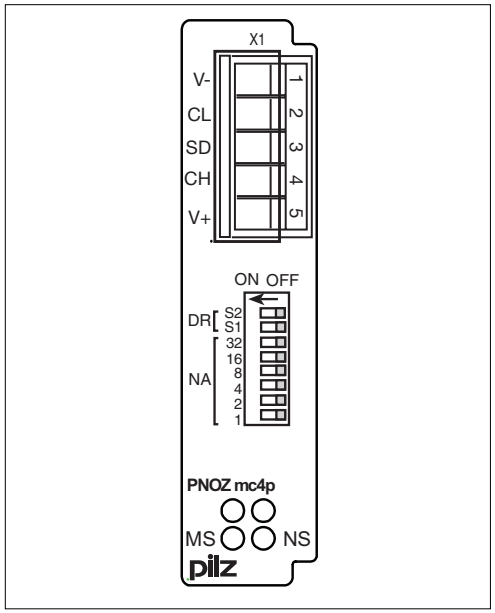

PNOZ mc4p expansion module

Dimensions in mm (")

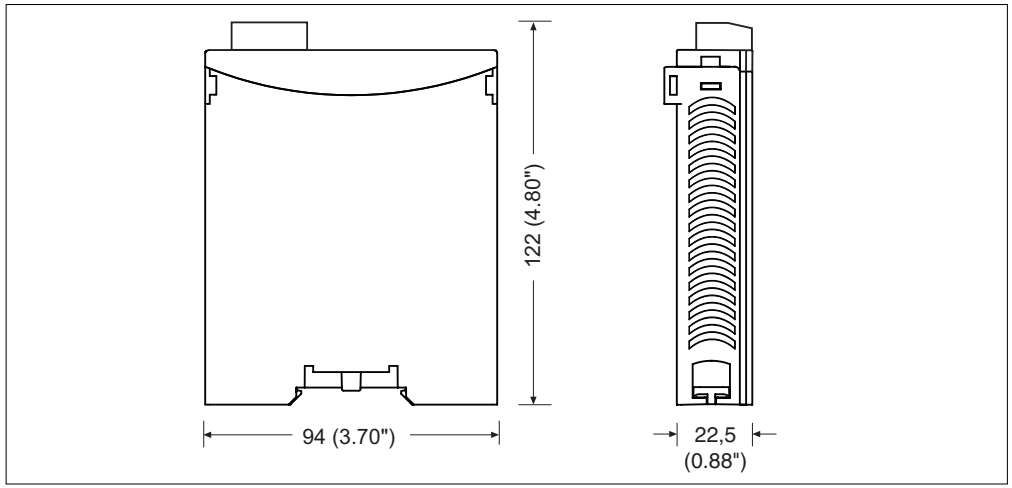

CAUTION!
The PNOZ mc4p expansion module must always be installed to the left of the base unit.
A distance of at least 20 mm must be maintained between the PNOZ mc4p and any external heat sources.

Wiring

The wiring is defined in the circuit diagram in the Configurator. It is possible to define which outputs on the safety system will communicate with DeviceNet. The connection to DeviceNet is made via a 5-pin screw connector.

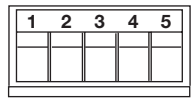

1: V-
2: CL (CAN_L)
3: SD (screen)
4: CH (CAN_H)
5: V+

PNOZ mc4p technical details

Application range	Non-safety-related applications
Device type	Slave
Status display	LED
Station address	0 ... 63
Transmission rate	125, 250, 500 kBit/s
Connection	5-pin screw connector

PNOZ mc4p expansion module

Setting the station address
The station address of the PNOZ mc4p is set via switches 1 ... 32 on the DIP switch:

Switch setting	Station address
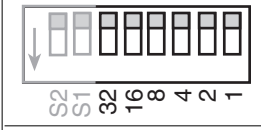	0
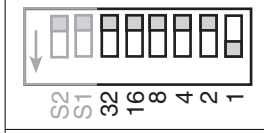	1
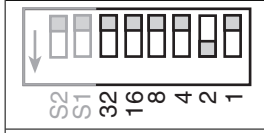	2
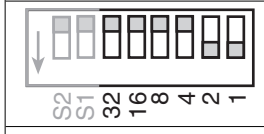	3
. . .	
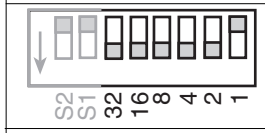	62
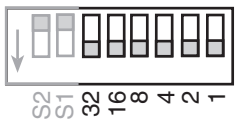	63

Set transmission rate
The transmission rate is set via switches S1 and S2 on the DIP switch:

Switch setting	Transmission rate
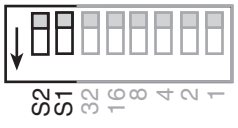	125 KBit/s
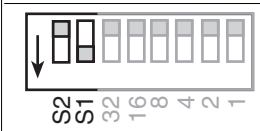	250 KBit/s
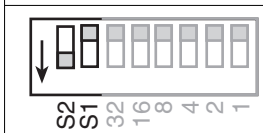	500 KBit/s

PNOZ mc5p expansion module

Intended use

The **PNOZ mc5p** expansion module may only be connected to a base unit (e.g. PNOZ m1p) from the PNOZmulti modular safety system. It is used for communication between the modular safety system and INTERBUS.

CAUTION!
The PNOZ mc5p expansion module may not be used for safety-related functions.

System requirements

- PNOZmulti Configurator: from Version 3.0.0
- PNOZ m1p: from Version 3.0

Please contact Pilz if you have an older version.

Description

INTERBUS is designed for fast data exchange at field level. The PNOZ mc5p expansion module is a passive INTERBUS subscriber (Slave). The basic communication functions conform to EN 50254. The central controller (Master) reads input information from the slaves and writes output information to the slaves as part of each cycle. As well as the cyclical transfer of usable data, the PNOZ mc5p can also be used for diagnostics and commissioning functions.

Module features:

- Can be configured using the PNOZmulti Configurator
- Status indicators for communication with INTERBUS and for errors
- Max. 1 PNOZ mc5p can be connected to the PNOZ m1p base unit
- Weight (with jumper): 153 g

A maximum of 24 outputs on the PNOZmulti safety system can be defined in the PNOZm Config for communication with INTERBUS. These outputs can be connected to the outputs on

- Logic elements
- Time elements
- Event counters
- Connection points

and to inputs on the safety system.

Terminal configuration

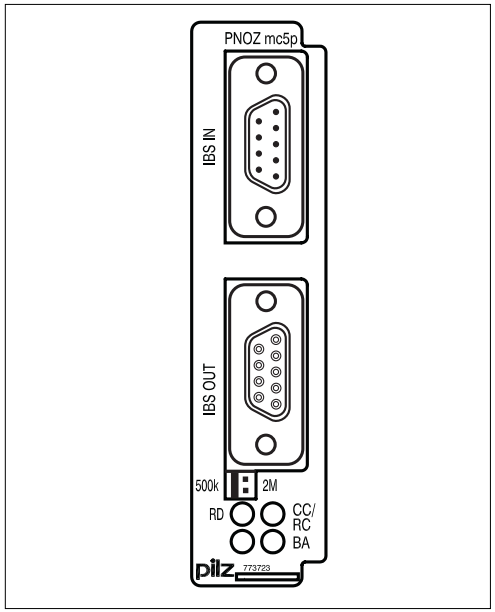

PNOZ mc5p expansion module

Dimensions in mm (")

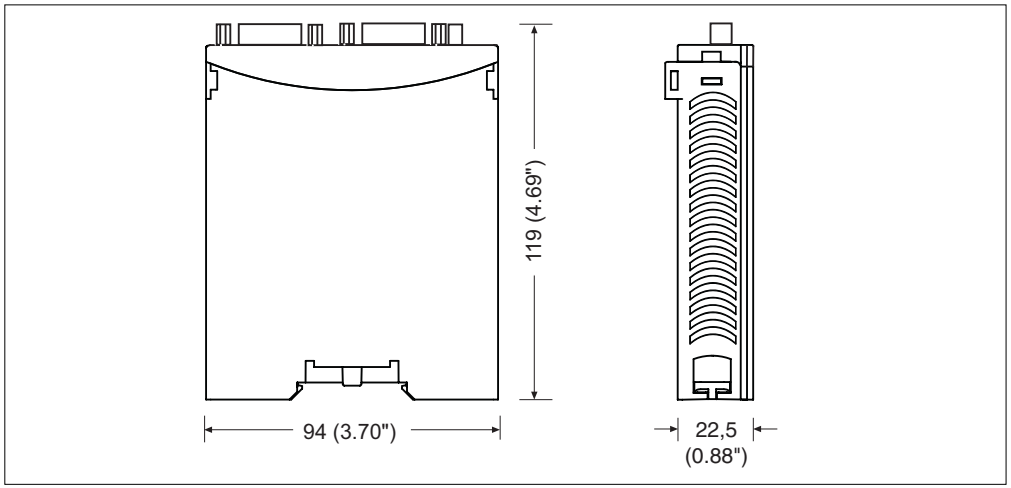

CAUTION!
The PNOZ mc5p expansion module must always be installed to the left of the base unit.
A distance of at least 20 mm must be maintained between the PNOZ mc5p and any external heat sources.

Wiring

The wiring is defined in the circuit diagram in the Configurator. It is possible to define which outputs on the safety system will communicate with INTERBUS. The connection to INTERBUS is made via two 9-pin screw connectors.

IBS IN

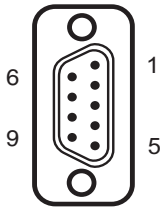

1: DO1
2: DI1
3: GND
4: Not assigned
5: Not assigned
6: /DO1
7: /DI1
8: Not assigned
9: Not assigned

IBS OUT

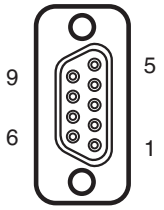

1: DO2
2: DI2
3: GND
4: Not assigned
5: GND
6: /DO2
7: /DI2
8: Not assigned
9: RBST

PNOZ mc5p technical details

Application range	Non-safety-related applications
Device type	Slave
Status display	LED
Transmission rate	500 kBit/s, 2 MBit/s
Connections	9-pin female D-Sub connector plus male connector

PNOZ mc5p expansion module

Set transmission rate
The transmission rate is set with a jumper:

Jumper position	Transmission rate
500k  2M	500 KBit/s
500k  2M	2 MBit/s

PNOZ mc6p expansion module

Intended use

The **PNOZ mc6p** expansion module may only be connected to a base unit (e.g. PNOZ m1p) from the PNOZmulti modular safety system. It is used for communication between the modular safety system and CANopen.

CAUTION!
The PNOZ mc6p expansion module may not be used for safety-related functions.

System requirements

- PNOZmulti Configurator: from Version 3.0.0
- PNOZ m1p: from Version 3.0

Please contact Pilz if you have an older version.

Description

CANopen is designed for fast data exchange at field level. The PNOZ mc6p expansion module is a passive CANopen subscriber (Slave). The basic communication functions conform to CiA DS-301 V3.0. The central controller (Master) reads input information from the slaves and writes output information to the slaves as part of each cycle. As well as the cyclical transfer of usable data, the PNOZ mc6p can also be used for diagnostics and commissioning functions.

Module features:

- Can be configured using the PNOZmulti Configurator
- Station addresses from 1 ... 99, selected via rotary switch
- Status indicators for communication with CANopen and for errors
- Max. 1 PNOZ mc6p can be connected to the PNOZ m1p base unit
- Weight (with jumper): 145 g

A maximum of 24 outputs on the PNOZmulti safety system can be defined in the PNOZm Config for communication with CANopen. These outputs can be connected to the outputs on

- Logic elements
- Time elements
- Event counters
- Connection points

and to inputs on the safety system.

Terminal configuration

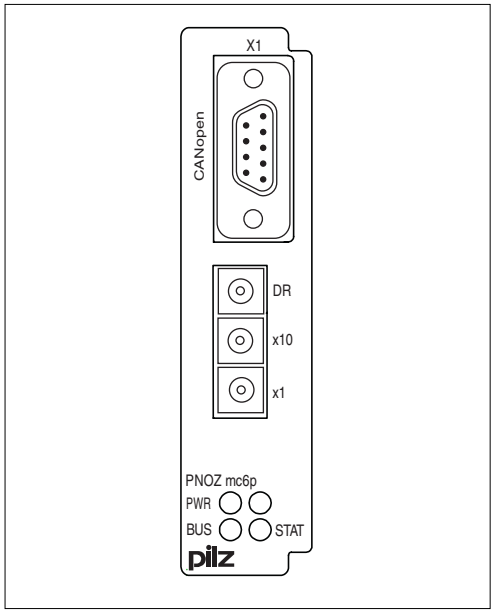

PNOZ mc6p expansion module

Dimensions in mm (")

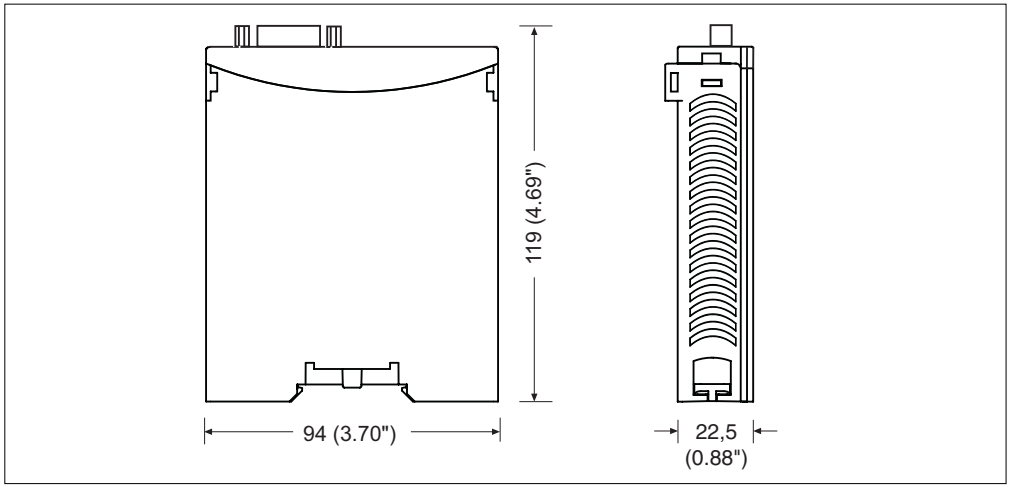

CAUTION!
The PNOZ mc6p expansion module must always be installed to the left of the base unit.

Wiring

The wiring is defined in the circuit diagram in the Configurator. It is possible to define which outputs on the safety system will communicate with CANopen. The connection to CANopen is made via a female 9-pin D-Sub connector.

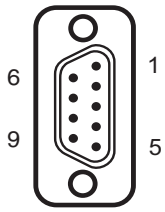

1: Not assigned
2: CAN_L
3: Not assigned
4: Not assigned
5: CAN_SHLD
6: Not assigned
7: CAN_H
8: Not assigned
9: Not assigned

PNOZ mc6p technical details

Application range	Non-safety-related applications
Device type	Slave
Status display	LED
Station address	1 ... 99
Transmission rate	10, 20, 50, 125, 250, 500, 800 kBit/s, 1 MBit/s
Connection	Male 9-pin D-Sub connector

PNOZ mc6p expansion module

Setting the station address
Two rotary switches are used to set the station address on the PNOZ mc6p.

- On the middle rotary switch, use a small screwdriver to set the tens digit for the address (“3” in the example).


x10

- On the lower rotary switch, set the ones digit for the address (“6” in the example).


x1

Station address 36 is set in the diagrams as an example.

Set transmission rate:
On the upper rotary switch DR, use a small screwdriver to set the transmission rate (in the example, “4” corresponds to 125 kBit/s)


DR

Switch setting	Transmission rate
0	-
1	10 KBit/s
2	20 kBit/s
3	50 kBit/s
4	125 kBit/s
5	250 kBit/s
6	500 kBit/s
7	800 kBit/s
8	1 MBit/s
9	-