**Manuals+** — User Manuals Simplified.



# MAYTAG PGC2TE Series Two Stage Fixed Speed ECM High Efficiency Upflow Gas Furnaces Owner's Manual

Contents

1 TECHNICAL SPECIFICATIONS
1.1 Model PGC2TE Series
1.1.1 SmartStart®
1.1.2 M1200 Product Line
1.1.2.1 Features and Benefits
1.1.3 GAS FURNACE COMPONENTS
1.1.3.1 LOCATION OF FURNACE COMPONENTS
1.1.4 DIMENSIONS
1.1.5 IDENTIFICATION CODE
1.1.6 SPECIFICATIONS
1.1.7 BLOWER PERFORMANCE PGC2TE
1.1.7.1 G7TE-060D-E24B1 (FSHE)
1.1.7.2 PGC2TE-080D-E35C1 (FSHE)
1.1.7.3 PGC2TE-100D-E35C1 (FSHE)
1.1.7.4 PGC2TE-115D-E45D1 (FSHE)
1.1.8 ACCESSORIES
1.1.9 VENTING
2 Documents / Resources
2.1 References
3 Related Posts

## TECHNICAL SPECIFICATIONS

### Model PGC2TE Series

**SmartStart®**




**M1200 Product Line**

**Two Stage, Fixed Speed ECM, High Efficiency**
**Upflow Gas Furnaces**
**96% AFUE Input 60,000-115,000 Btuh**

**The high efficiency gas furnace may be installed free standing in a utility room, basement, or enclosed in an alcove or closet. The rounded corner jacket provides a pleasing "appliance appearance." Design certified by CSA for application in Canada and the United States.**

**Features and Benefits**

– **Multi-Speed Direct Drive Blower:** Energy-efficient brushless DC (ECM) fixed-speed motor offers 16 speeds designed to give a wide range of cooling capacities.
– **Two Stage Inducer:** Optimizes efficiency on first stage heat and reduces sound levels.
– **100% Fired and Tested:** All units and each component are tested on the manufacturing line.
– **Best Packaging in the Industry:** Unique corner post design assures product will arrive to the homeowner dent free.
– **30 Second Blower Delay:** At start-up assures a warm duct temperature at furnace start-up. Adjustable blower off settings (60, 90, 120 and 180 seconds).
– **30 Second Post Purge**: Increases life of heat exchanger.
– **Hot Surface Igniter**: Innovative application of an appliance type igniter with a 20 year history of reliability. Utilizes proven SmartStart ® technology.
– **Color Coded Wire Harness:** Designed to fit the components, all with quick-connect fittings for ease of service and replacement.
– **Flexible Category IV Venting System:** May be vertically or horizontally vented using either a one-pipe or two-pipe system for maximum flexibility in installation.
– **High Static Blowers:** All models equipped with high static ECM blowers.
– **Low Boy Height:** Easy to apply in low ceiling applications, works well with taller high SEER coils, easier to handle and install.
– **Heat Exchanger:** Heavy gauge aluminized steel primary heat exchanger and stainless steel secondary heat exchanger assures a long life.
– **60 Second Fixed Cooling Cycle Blower-Off Delay (TDR):** Increases cooling performance when matched with a Nortek Global HVAC evaporator coil.
– **LP Convertible:** Simple burner orifice and regulator spring change for ease of convertibility (as an accessory).

– **Diagnostic Lights:** Dedicated light for flame signal strength and 2 lights in combination to indicate all other fault codes with easy to recognize states without counting flashes.
– **Integrated Control Boards:** With connections for electronic air cleaner, humidifier, and dehumidification. Ergonomically located for ease of service.
– **Two Piece Door Design:** Enhances furnace appearance and uses captured screws to prevent losing door screws.
– **Blower Compartment:** Sealed door to reduce air leakage and insulated for ultra quiet operation.
– **Sealed Vestibule:** Reduces burner and inducer sound levels.
– **Furnace Air Leakage:** These furnaces comply with Energy Star cabinet air leakage requirement of less than or equal to 2%. Keep the conditioned air flowing to where it's needed.

#### GAS FURNACE COMPONENTS

##### LOCATION OF FURNACE COMPONENTS

**UPFLOW FURNACE (*TE SERIES)**

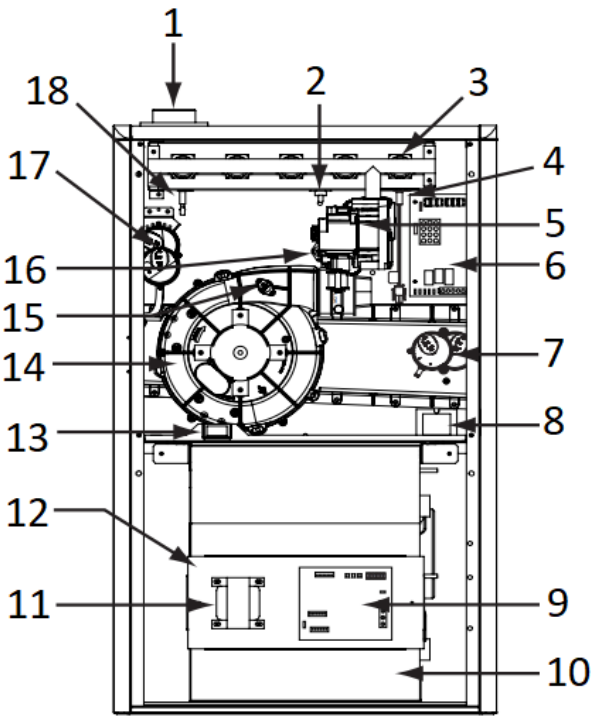

Upflow Gas Furnace Components

1. Finish Flange
2. Roll-Out Switch
3. Burner Assembly
4. Igniter
5. Gas Valve
6. Furnace Control Board
7. Pressure Switches (Condensate)
8. Transformer
9. Motor Control Board
10. Blower Assembly
11. Motor Choke (C & D cabinets only)
12. Motor Control Box
13. Blower Door Switch

14. Inducer Assembly
15. Inducer Limit Switch
16. Main Air Limit Switch
17. Pressure Switches (Inducer)
18. Flame Sensor

**DIMENSIONS**

| ***TE Model #s** | **Dimension "A"** | **Dimension "B"** | **Dimension "C"** |
|---|---|---|---|
| 060DVB1 | 17 1/2 | 15 7/8 | 16 1/8 |
| 080DVC1 | 21 | 19 3/8 | 19 5/8 |
| 100DVC1 | | | |
| 115DVD1 | 24 1/2 | 22 7/8 | 23 1/8 |

**TOP VIEW**

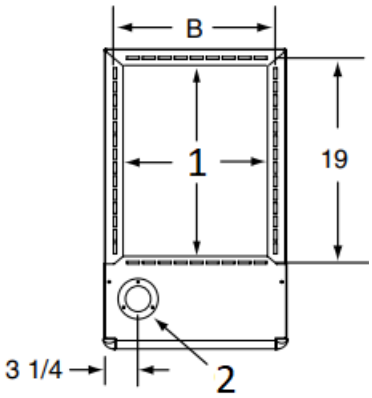


1. FLANGES
2. Combustion Air

**BOTTOM VIEW**

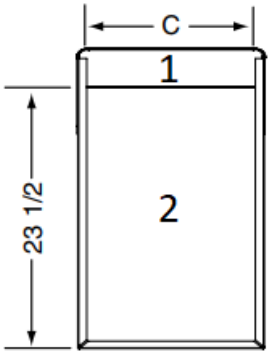


1. Front Brace
2. Bottom Panel

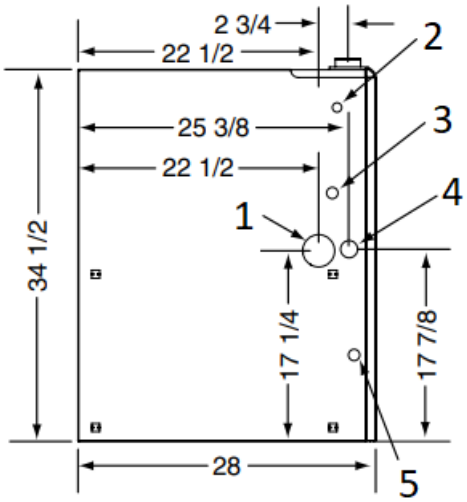


**LEFT SIDE**

1. Vent pipe (Ø 3”)
2. T-stat (Ø 7/8)
3. Electric (Ø 7/8)
4. Gas (Ø 1 5/8)
5. Condensate (Ø 1 1/16)

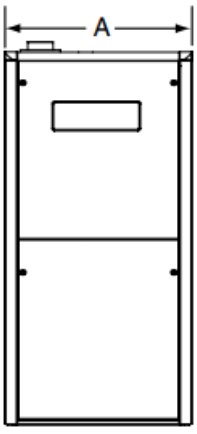


**FRONT VIEW**

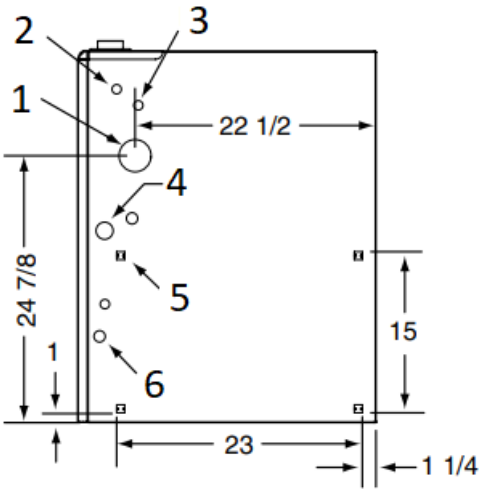


**RIGHT SIDE**

1. Vent pipe (Ø 3”)
2. T-stat (Ø 7/8)
3. Electric (Ø 7/8)
4. Gas (Ø 1 5/8)
5. 4 Knockouts (both sides)
6. Cond. (Ø 1 1/16)

## PGC2TE 96% High Efficiency Upflow Series

**IDENTIFICATION CODE**

**MODEL IDENTIFICATION CODE**

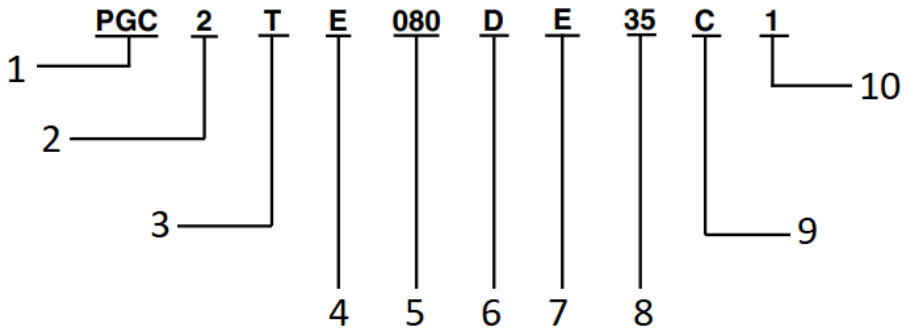


1. Gas Furnace
2. Design Series
3. S = Single Stage
   T = Two Stage
   M = Modulating
4. A = 80% Upflow/Horizontal
   C = 92.1% / 95.1% Upflow/Horizontal
   D = 95% Upflow/Horizontal
   E = 96% Upflow
   Q = 96.4+% AFUE Upflow/Horizontal

5. **Input Heating Capacity**
   045 = 45,000
   054 = 54,000
   072 = 72,000
   090 = 90,000
   108 = 108,000
   126 = 126,000
6. **NOx**
   C/D = 40 Ng/J or less NOx
   U = 14 Ng/J or less NOx
7. **Motor Technology**
   V = VSHE
   E = FSHE
   T = 5 Tap ECM
8. **Cooling Airflow**
   23 = 2-3 Tons
   24 = 2-4 Tons
   35 = 3-5 Tons
   45 = 4-5 Tons
9. **Cabinet Width**
   A = 14.25
   B = 17.50
   C = 21.00
   D = 24.50
10. **Revision**

**SPECIFICATIONS**

| PGC2TE MODEL NUMBERS: | 060DE24B1 | 080DE35C1 | 100DE35C1 | 115DE45D1 |
|---|---|---|---|---|
| Input – Btuh (a) | 60000 / 39000 | 80000 / 52000 | 100000 / 65000 | 115000 / 74750 |
| Heating Capacity – BtuH | 58000 / 37000 | 77000 / 50000 | 96000 / 62000 | 110000 / 72000 |
| **AFUE** | 96.0 | 96.0 | 96.0 | 96.0 |
| Motor H.P. – Speed – Type | 3/4 – BLDC | 1 – BLDC | 1 – BLDC | 1 – BLDC |
| Motor FLA | 8.8 | 11.5 | 11.5 | 11.5 |
| Rated Ext. SP – In. W.C. | 0.50 | 0.50 | 0.50 | 0.50 |
| Temperature Rise Range – F | 30-60 | 30-60 | 35-65 | 40-70 |
| Shipping Weights | 120 lb | 130 lb | 135 lb | 145 lb |
| SKU | 1025958P | 1025959P | 1025960P | 1025961P |

Note:
All models are 115V, 60 Hz. Gas Connections are 1/2″ N.P.T. AFUE = Annual Fuel Utilization Efficiency
(a) Ratings to 2,000 ft. Over 2,000 ft. reduce 4% for each 1,000 ft. above sea level.

**BLOWER PERFORMANCE PGC2TE**

**G7TE-060D-E24B1 (FSHE)**

| HEATING AIRFLOW (CFM) & TEMPERATURE RISE (°F) | | | | | | | | | | | | | | |
|---|---|---|---|---|---|---|---|---|---|---|---|---|---|---|
| **Model Number/ Heating Input** | **MOTOR SWITCH SETTINGS (0= OFF, 1=ON)** | | | | **External Static Pressure (in.w.c.)** | | | | | | | | | |
| | | | | | **0.1** | | **0.2** | | **0.3** | | **0.4** | | **0.5** | |
| | **1** | **2** | **3** | **4** | **CFM** | **RISE** | **CFM** | **RISE** | **CFM** | **RISE** | **CFM** | **RISE** | **CFM** | **RISE** |
| | 0 | 0 | 0 | 0 | | | | | | | | | | |

| | | | | | | | | | | | | | | |
|---|---|---|---|---|---|---|---|---|---|---|---|---|---|---|
| G7TE-060D-E24B1 60,000 BTU/hr | 1 | 0 | 0 | 0 | | | | | | | | | | |
| | 0 | 1 | 0 | 0 | | | | | | | | | | |
| | 1 | 1 | 0 | 0 | | | | | | | | | | |
| | 0 | 0 | 1 | 0 | | | | | | | | | | |
| | 1 | 0 | 1 | 0 | 940 | 57 | 890 | 60 | | | | | | |
| | 0 | 1 | 1 | 0 | 990 | 54 | 945 | 56 | 905 | 59 | | | | |
| | 1 | 1 | 1 | 0 | 1,055 | 51 | 1,015 | 53 | 970 | 55 | 930 | 57 | 890 | 60 |
| | 0 | 0 | 0 | 1 | 1,135 | 47 | 1,095 | 49 | 1,055 | 51 | 1,010 | 53 | 960 | 56 |
| | 1 | 0 | 0 | 1 | 1,185 | 45 | 1,145 | 47 | 1,105 | 48 | 1,065 | 50 | 1,030 | 52 |
| | 0 | 1 | 0 | 1 | 1,250 | 43 | 1,210 | 44 | 1,170 | 46 | 1,135 | 47 | 1,095 | 49 |
| | 1 | 1 | 0 | 1 | 1,290 | 41 | 1,255 | 42 | 1,220 | 44 | 1,180 | 45 | 1,145 | 47 |
| | 0 | 0 | 1 | 1 | 1,315 | 41 | 1,275 | 42 | 1,240 | 43 | 1,200 | 44 | 1,160 | 46 |
| | 1 | 0 | 1 | 1 | 1,350 | 40 | 1,315 | 41 | 1,280 | 42 | 1,245 | 43 | 1,205 | 44 |
| | 0 | 1 | 1 | 1 | 1,390 | 38 | 1,350 | 40 | 1,315 | 41 | 1,275 | 42 | 1,240 | 43 |
| | 1 | 1 | 1 | 1 | | | | | | | | | | |

| **COOLING AIRFLOW (CFM)** | | |
|---|---|---|
| | **MOTOR SWITCH SETTINGS (0=OFF, 1** | **External Static Pressure (in.w.c.)** |

| Model Number/ Heating Input | =ON) | | | | 0.1 | 0.2 | 0.3 | 0.4 | 0.5 | 0.6 | 0.7 | 0.8 |
|---|---|---|---|---|---|---|---|---|---|---|---|---|
| | 5 | 6 | 7 | 8 | CFM | CFM | CFM | CFM | CFM | CFM | CFM | CFM |
| G7TE-060D-E 24B1 60,000 BTU/hr | 0 | 0 | 0 | 0 | | | | | | | | |
| | 1 | 0 | 0 | 0 | | | | | | | | |
| | 0 | 1 | 0 | 0 | | | | | | | | |
| | 1 | 1 | 0 | 0 | 725 | | | | | | | |
| | 0 | 0 | 1 | 0 | 810 | | | | | | | |
| | 1 | 0 | 1 | 0 | 940 | 890 | 845 | 795 | 750 | 700 | | |
| | 0 | 1 | 1 | 0 | 990 | 945 | 905 | 860 | 820 | 775 | 735 | 690 |
| | 1 | 1 | 1 | 0 | 1,055 | 1,015 | 970 | 930 | 890 | 845 | 805 | 760 |
| | 0 | 0 | 0 | 1 | 1,135 | 1,095 | 1,055 | 1,010 | 960 | 930 | 890 | 850 |
| | 1 | 0 | 0 | 1 | 1,185 | 1,145 | 1,105 | 1,065 | 1,030 | 990 | 950 | 910 |
| | 0 | 1 | 0 | 1 | 1,250 | 1,210 | 1,170 | 1,135 | 1,095 | 1,055 | 1,020 | 980 |
| | 1 | 1 | 0 | 1 | 1,290 | 1,255 | 1,220 | 1,180 | 1,145 | 1,110 | 1,075 | 1,040 |
| | 0 | 0 | 1 | 1 | 1,315 | 1,275 | 1,240 | 1,200 | 1,160 | 1,120 | 1,085 | 1,045 |
| | 1 | 0 | 1 | 1 | 1,350 | 1,315 | 1,280 | 1,245 | 1,205 | 1,170 | 1,135 | 1,100 |
| | 0 | 1 | 1 | 1 | 1,390 | 1,350 | 1,315 | 1,275 | 1,240 | 1,200 | 1,160 | 1,125 |

| | | | | | | | | | | | | |
|---|---|---|---|---|---|---|---|---|---|---|---|---|
| | 1 | 1 | 1 | 1 | 1,420 | 1,380 | 1,345 | 1,310 | 1,270 | 1,235 | 1,200 | 1,160 |

***NOTES:**

1. Motor switch settings for heating speeds use HEAT switches 1, 2, 3, & 4 and for cooling speeds use COOL switches 5, 6, 7, & 8.
2. To comply with government mandated efficiency standards, two openings are required for airflows above 1,600 CFM.
3. Data is shown without filter.
4. Temperature rises in the table are approximate. Actual temperature rises may vary.
5. Individual cells shaded in gray indicate a temperature rise outside of the recommended range.
6. To comply with government mandated efficiency standards, speed settings shaded in gray are not allowed in HEAT mode.
7. When in low stage heat, the airflow is approximately 70% of the tables high value (2-stage furnaces only).

**PGC2TE-080D-E35C1 (FSHE)**

| **HEATING AIRFLOW (CFM) & TEMPERATURE RISE (°F)** | | | | | | | | | | | | | | |
|---|---|---|---|---|---|---|---|---|---|---|---|---|---|---|
| **Model Number/ Heating Input** | **MOTOR SWITCH SETTINGS (0= OFF, 1=ON)** | | | | **External Static Pressure (in.w.c.)** | | | | | | | | | |
| | | | | | **0.1** | | **0.2** | | **0.3** | | **0.4** | | **0.5** | |
| | **1** | **2** | **3** | **4** | **CFM** | **RISE** | **CFM** | **RISE** | **CFM** | **RISE** | **CFM** | **RISE** | **CFM** | **RISE** |
| | 0 | 0 | 0 | 0 | 1,125 | 63 | | | | | | | | |
| | 1 | 0 | 0 | 0 | 1,205 | 59 | 1,120 | 63 | | | | | | |
| | 0 | 1 | 0 | 0 | 1,305 | 54 | 1,225 | 58 | 1,150 | 62 | | | | |
| | 1 | 1 | 0 | 0 | 1,430 | 50 | 1,350 | 53 | 1,270 | 56 | 1,190 | 60 | 1,110 | 63 |
| | 0 | 0 | 1 | 0 | 1,525 | 47 | 1,450 | 49 | 1,375 | 52 | 1,300 | 55 | 1,225 | 57 |
| | 1 | 0 | 1 | 0 | 1,620 | 44 | 1,540 | 46 | 1,465 | 49 | 1,390 | 51 | 1,315 | 54 |

| | | | | | | | | | | | | | | |
|---|---|---|---|---|---|---|---|---|---|---|---|---|---|---|
| PGC2TE-080D-E35C1 80,000 BTU/hr | 0 | 1 | 1 | 0 | 1,695 | 42 | 1,620 | 44 | 1,545 | 46 | 1,465 | 49 | 1,390 | 51 |
| | 1 | 1 | 1 | 0 | 1,770 | 40 | 1,700 | 42 | 1,630 | 44 | 1,555 | 46 | 1,485 | 47 |
| | 0 | 0 | 0 | 1 | 1,875 | 38 | 1,805 | 39 | 1,730 | 41 | 1,655 | 43 | 1,580 | 45 |
| | 1 | 0 | 0 | 1 | 1,905 | 37 | 1,840 | 39 | 1,775 | 40 | 1,710 | 42 | 1,640 | 43 |
| | 0 | 1 | 0 | 1 | 1,980 | 36 | 1,910 | 37 | 1,845 | 39 | 1,780 | 40 | 1,715 | 41 |
| | 1 | 1 | 0 | 1 | 2,025 | 35 | 1,960 | 36 | 1,895 | 38 | 1,830 | 39 | 1,765 | 40 |
| | 0 | 0 | 1 | 1 | | | 2,025 | 35 | 1,960 | 36 | 1,900 | 37 | 1,840 | 38 |
| | 1 | 0 | 1 | 1 | | | | | 2,010 | 35 | 1,945 | 37 | 1,880 | 37 |
| | 0 | 1 | 1 | 1 | | | | | | | 2,035 | 35 | 1,980 | 36 |
| | 1 | 1 | 1 | 1 | | | | | | | | | | |

| **COOLING AIRFLOW (CFM)** | | | | | | | | | | | | |
|---|---|---|---|---|---|---|---|---|---|---|---|---|
| **Model Number/ Heating Input** | **MOTOR SWITCH SETTINGS (0=OFF, 1=ON)** | | | | **External Static Pressure (in.w.c.)** | | | | | | | |
| | | | | | **0.1** | **0.2** | **0.3** | **0.4** | **0.5** | **0.6** | **0.7** | **0.8** |
| | **5** | **6** | **7** | **8** | **CFM** | **CFM** | **CFM** | **CFM** | **CFM** | **CFM** | **CFM** | **CFM** |
| | 0 | 0 | 0 | 0 | 1,125 | 1,040 | 960 | 880 | 795 | | | |
| | 1 | 0 | 0 | 0 | 1,205 | 1,120 | 1,040 | 960 | 875 | 795 | | |
| | 0 | 1 | 0 | 0 | 1,305 | 1,225 | 1,150 | 1,070 | 995 | 915 | 840 | |

| | | | | | | | | | | | | |
|---|---|---|---|---|---|---|---|---|---|---|---|---|
| PGC2TE-080D-E35C 1 80,000 BTU/hr | 1 | 1 | 0 | 0 | 1,430 | 1,350 | 1,270 | 1,190 | 1,110 | 1,030 | 950 | 865 |
| | 0 | 0 | 1 | 0 | 1,525 | 1,450 | 1,375 | 1,300 | 1,225 | 1,150 | 1,075 | 1,000 |
| | 1 | 0 | 1 | 0 | 1,620 | 1,540 | 1,465 | 1,390 | 1,315 | 1,240 | 1,165 | 1,090 |
| | 0 | 1 | 1 | 0 | 1,695 | 1,620 | 1,545 | 1,465 | 1,390 | 1,315 | 1,235 | 1,160 |
| | 1 | 1 | 1 | 0 | 1,770 | 1,700 | 1,630 | 1,555 | 1,485 | 1,410 | 1,340 | 1,265 |
| | 0 | 0 | 0 | 1 | 1,875 | 1,805 | 1,730 | 1,655 | 1,580 | 1,510 | 1,435 | 1,340 |
| | 1 | 0 | 0 | 1 | 1,905 | 1,840 | 1,775 | 1,710 | 1,640 | 1,575 | 1,510 | 1,445 |
| | 0 | 1 | 0 | 1 | 1,980 | 1,910 | 1,845 | 1,780 | 1,715 | 1,650 | 1,580 | 1,515 |
| | 1 | 1 | 0 | 1 | 2,025 | 1,960 | 1,895 | 1,830 | 1,765 | 1,700 | 1,635 | 1,570 |
| | 0 | 0 | 1 | 1 | 2,085 | 2,025 | 1,960 | 1,900 | 1,840 | 1,775 | 1,715 | 1,655 |
| | 1 | 0 | 1 | 1 | 2,135 | 2,070 | 2,010 | 1,945 | 1,880 | 1,815 | 1,750 | 1,685 |
| | 0 | 1 | 1 | 1 | 2,200 | 2,145 | 2,090 | 2,035 | 1,980 | 1,925 | 1,870 | 1,820 |
| | 1 | 1 | 1 | 1 | 2,280 | 2,225 | 2,170 | 2,115 | 2,065 | 2,010 | 1,955 | 1,900 |

***NOTES:**

1. Motor switch settings for heating speeds use HEAT switches 1, 2, 3, & 4 and for cooling speeds use COOL switches 5, 6, 7, & 8.
2. To comply with government mandated efficiency standards, two openings are required for airflows above 1,600 CFM.

3. Data is shown without filter.
4. Temperature rises in the table are approximate. Actual temperature rises may vary.
5. Individual cells shaded in gray indicate a temperature rise outside of the recommended range.
6. To comply with government mandated efficiency standards, speed settings shaded in gray are not allowed in HEAT mode.
7. When in low stage heat, the airflow is approximately 70% of the tables high value (2-stage furnaces only).

**PGC2TE-100D-E35C1 (FSHE)**

| HEATING AIRFLOW (CFM) & TEMPERATURE RISE (°F) | | | | | | | | | | | | | | | |
|---|---|---|---|---|---|---|---|---|---|---|---|---|---|---|---|
| **Model Number/ Heating Input** | **MOTOR SWITCH SETTINGS (0=OFF, 1=ON)** | | | | **External Static Pressure (in.w.c.)** | | | | | | | | | | |
| | | | | | **0.1** | | **0.2** | | **0.3** | | **0.4** | | **0.5** | | |
| | **1** | **2** | **3** | **4** | **CFM** | **RISE** | **CFM** | **RISE** | **CFM** | **RISE** | **CFM** | **RISE** | **CFM** | **RISE** |
| PGC2TE-100D-E35C1 100,000 BTU/hr | 0 | 0 | 0 | 0 | | | | | | | | | | |
| | 1 | 0 | 0 | 0 | | | | | | | | | | |
| | 0 | 1 | 0 | 0 | | | | | | | | | | |
| | 1 | 1 | 0 | 0 | | | | | | | | | | |
| | 0 | 0 | 1 | 0 | | | | | | | | | | |
| | 1 | 0 | 1 | 0 | 1,620 | 55 | 1,540 | 58 | | | | | | |
| | 0 | 1 | 1 | 0 | 1,695 | 52 | 1,620 | 55 | 1,545 | 58 | | | | |
| | 1 | 1 | 1 | 0 | 1,770 | 50 | 1,700 | 52 | 1,630 | 55 | 1,555 | 57 | 1,485 | 60 |
| | 0 | 0 | 0 | 1 | 1,875 | 47 | 1,805 | 49 | 1,730 | 51 | 1,655 | 54 | 1,580 | 56 |
| | 1 | 0 | 0 | 1 | 1,905 | 47 | 1,840 | 48 | 1,775 | 50 | 1,710 | 52 | 1,640 | 54 |

| | | | | | | | | | | | | | | |
|---|---|---|---|---|---|---|---|---|---|---|---|---|---|---|
| 0 | 1 | 0 | 1 | 1,980 | 45 | 1,910 | 47 | 1,845 | 48 | 1,780 | 50 | 1,715 | 52 |
| 1 | 1 | 0 | 1 | 2,025 | 44 | 1,960 | 45 | 1,895 | 47 | 1,830 | 49 | 1,765 | 50 |
| 0 | 0 | 1 | 1 | 2,085 | 43 | 2,025 | 44 | 1,960 | 45 | 1,900 | 47 | 1,840 | 48 |
| 1 | 0 | 1 | 1 | 2,135 | 42 | 2,070 | 43 | 2,010 | 44 | 1,945 | 46 | 1,880 | 47 |
| 0 | 1 | 1 | 1 | | | | | | | | | | |
| 1 | 1 | 1 | 1 | | | | | | | | | | |

| **COOLING AIRFLOW (CFM)** | | | | | | | | | | | | | |
|---|---|---|---|---|---|---|---|---|---|---|---|---|---|
| **Model Number/ Heating Input** | **MOTOR SWITCH SETTINGS (0=OFF, 1=ON)** | | | | **External Static Pressure (in.w.c.)** | | | | | | | | |
| | | | | | **0.1** | **0.2** | **0.3** | **0.4** | **0.5** | **0.6** | **0.7** | **0.8** |
| | **5** | **6** | **7** | **8** | **CFM** | **CFM** | **CFM** | **CFM** | **CFM** | **CFM** | **CFM** | **CFM** |
| | 0 | 0 | 0 | 0 | 1,125 | 1,040 | | | | | | |
| | 1 | 0 | 0 | 0 | 1,205 | 1,120 | 1,040 | | | | | |
| | 0 | 1 | 0 | 0 | 1,305 | 1,225 | 1,150 | 1,070 | 995 | | | |
| | 1 | 1 | 0 | 0 | 1,430 | 1,350 | 1,270 | 1,190 | 1,110 | 1,030 | | |
| | 0 | 0 | 1 | 0 | 1,525 | 1,450 | 1,375 | 1,300 | 1,225 | 1,150 | 1,075 | 1,000 |

| | | | | | | | | | | | | |
|---|---|---|---|---|---|---|---|---|---|---|---|---|
| PGC2TE-100D-E35C1 100,000 BTU/hr | 1 | 0 | 1 | 0 | 1,620 | 1,540 | 1,465 | 1,390 | 1,315 | 1,240 | 1,165 | 1,090 |
| | 0 | 1 | 1 | 0 | 1,695 | 1,620 | 1,545 | 1,465 | 1,390 | 1,315 | 1,235 | 1,160 |
| | 1 | 1 | 1 | 0 | 1,770 | 1,700 | 1,630 | 1,555 | 1,485 | 1,410 | 1,340 | 1,265 |
| | 0 | 0 | 0 | 1 | 1,875 | 1,805 | 1,730 | 1,655 | 1,580 | 1,510 | 1,435 | 1,340 |
| | 1 | 0 | 0 | 1 | 1,905 | 1,840 | 1,775 | 1,710 | 1,640 | 1,575 | 1,510 | 1,445 |
| | 0 | 1 | 0 | 1 | 1,980 | 1,910 | 1,845 | 1,780 | 1,715 | 1,650 | 1,580 | 1,515 |
| | 1 | 1 | 0 | 1 | 2,025 | 1,960 | 1,895 | 1,830 | 1,765 | 1,700 | 1,635 | 1,570 |
| | 0 | 0 | 1 | 1 | 2,085 | 2,025 | 1,960 | 1,900 | 1,840 | 1,775 | 1,715 | 1,655 |
| | 1 | 0 | 1 | 1 | 2,135 | 2,070 | 2,010 | 1,945 | 1,880 | 1,815 | 1,750 | 1,685 |
| | 0 | 1 | 1 | 1 | 2,200 | 2,145 | 2,090 | 2,035 | 1,980 | 1,925 | 1,870 | 1,820 |
| | 1 | 1 | 1 | 1 | 2,280 | 2,225 | 2,170 | 2,115 | 2,065 | 2,010 | 1,955 | 1,900 |

***NOTES:**

1. Motor switch settings for heating speeds use HEAT switches 1, 2, 3, & 4 and for cooling speeds use COOL switches 5, 6, 7, & 8.

2. To comply with government mandated efficiency standards, two openings are required for airflows above 1,600 CFM.
3. Data is shown without filter.
4. Temperature rises in the table are approximate. Actual temperature rises may vary.
5. Individual cells shaded in gray indicate a temperature rise outside of the recommended range.
6. To comply with government mandated efficiency standards, speed settings shaded in gray are not allowed in HEAT mode.
7. When in low stage heat, the airflow is approximately 70% of the tables high value (2-stage furnaces only).

**PGC2TE-115D-E45D1 (FSHE)**

| **HEATING AIRFLOW (CFM) & TEMPERATURE RISE (°F)** | | | | | | | | | | | | | | |
|---|---|---|---|---|---|---|---|---|---|---|---|---|---|---|
| **Model Number/ Heating Input** | **MOTOR SWITCH SETTINGS (0=OFF, 1=ON)** | | | | **External Static Pressure (in.w.c.)** | | | | | | | | | |
| | | | | | **0.1** | | **0.2** | | **0.3** | | **0.4** | | **0.5** | |
| | **1** | **2** | **3** | **4** | **CFM** | **RISE** | **CFM** | **RISE** | **CFM** | **RISE** | **CFM** | **RISE** | **CFM** | **RISE** |
| PGC2TE-115D-E45D1 115,000 BTU/hr | 0 | 0 | 0 | 0 | | | | | | | | | | |
| | 1 | 0 | 0 | 0 | | | | | | | | | | |
| | 0 | 1 | 0 | 0 | | | | | | | | | | |
| | 1 | 1 | 0 | 0 | | | | | | | | | | |
| | 0 | 0 | 1 | 0 | | | | | | | | | | |
| | 1 | 0 | 1 | 0 | 1,760 | 58 | 1,715 | 60 | | | | | | |
| | 0 | 1 | 1 | 0 | 1,835 | 56 | 1,790 | 57 | 1,745 | 59 | | | | |
| | 1 | 1 | 1 | 0 | 1,885 | 54 | 1,840 | 56 | 1,790 | 57 | 1,745 | 59 | 1,700 | 60 |
| | 0 | 0 | 0 | 1 | 1,945 | 53 | 1,900 | 54 | 1,850 | 55 | 1,805 | 57 | 1,760 | 58 |

| | | | | | | | | | | | | | | |
|---|---|---|---|---|---|---|---|---|---|---|---|---|---|---|
| 1 | 0 | 0 | 1 | 1,950 | 52 | 1,905 | 54 | 1,860 | 55 | 1,820 | 56 | 1,775 | 58 |
| 0 | 1 | 0 | 1 | 2,075 | 49 | 2,030 | 50 | 1,990 | 51 | 1,945 | 53 | 1,900 | 54 |
| 1 | 1 | 0 | 1 | 2,125 | 48 | 2,085 | 49 | 2,040 | 50 | 2,000 | 51 | 1,955 | 52 |
| 0 | 0 | 1 | 1 | 2,170 | 47 | 2,130 | 48 | 2,090 | 49 | 2,045 | 50 | 2,005 | 51 |
| 1 | 0 | 1 | 1 | 2,215 | 46 | 2,180 | 47 | 2,140 | 48 | 2,105 | 49 | 2,070 | 49 |
| 0 | 1 | 1 | 1 | | | | | | | | | | |
| 1 | 1 | 1 | 1 | | | | | | | | | | |

| **COOLING AIRFLOW (CFM)** | | | | | | | | | | | | | |
|---|---|---|---|---|---|---|---|---|---|---|---|---|---|
| **Model Number/ Heating Input** | **MOTOR SWITCH SETTINGS (0=OFF, 1=ON)** | | | | **External Static Pressure (in.w.c.)** | | | | | | | |
| | | | | | **0.1** | **0.2** | **0.3** | **0.4** | **0.5** | **0.6** | **0.7** | **0.8** |
| | **5** | **6** | **7** | **8** | **CFM** | **CFM** | **CFM** | **CFM** | **CFM** | **CFM** | **CFM** | **CFM** |
| | 0 | 0 | 0 | 0 | 1,395 | 1,350 | 1,305 | 1,260 | 1,210 | 1,165 | 1,120 | |
| | 1 | 0 | 0 | 0 | 1,465 | 1,420 | 1,375 | 1,330 | 1,290 | 1,245 | 1,200 | 1,155 |
| | 0 | 1 | 0 | 0 | 1,555 | 1,510 | 1,470 | 1,425 | 1,380 | 1,340 | 1,295 | 1,250 |
| | 1 | 1 | 0 | 0 | 1,625 | 1,585 | 1,540 | 1,500 | 1,460 | 1,415 | 1,375 | 1,335 |

| | | | | | | | | | | | | |
|---|---|---|---|---|---|---|---|---|---|---|---|---|
| PGC2TE-115D-E45D1 115,000 BTU/hr | 0 | 0 | 1 | 0 | 1,690 | 1,650 | 1,610 | 1,570 | 1,530 | 1,485 | 1,445 | 1,405 |
| | 1 | 0 | 1 | 0 | 1,760 | 1,715 | 1,670 | 1,625 | 1,575 | 1,530 | 1,485 | 1,440 |
| | 0 | 1 | 1 | 0 | 1,835 | 1,790 | 1,745 | 1,695 | 1,650 | 1,605 | 1,555 | 1,510 |
| | 1 | 1 | 1 | 0 | 1,885 | 1,840 | 1,790 | 1,745 | 1,700 | 1,655 | 1,610 | 1,565 |
| | 0 | 0 | 0 | 1 | 1,945 | 1,900 | 1,850 | 1,805 | 1,760 | 1,710 | 1,665 | 1,620 |
| | 1 | 0 | 0 | 1 | 1,950 | 1,905 | 1,860 | 1,820 | 1,775 | 1,735 | 1,690 | 1,650 |
| | 0 | 1 | 0 | 1 | 2,075 | 2,030 | 1,990 | 1,945 | 1,900 | 1,855 | 1,810 | 1,770 |
| | 1 | 1 | 0 | 1 | 2,125 | 2,085 | 2,040 | 2,000 | 1,955 | 1,910 | 1,870 | 1,825 |
| | 0 | 0 | 1 | 1 | 2,170 | 2,130 | 2,090 | 2,045 | 2,005 | 1,965 | 1,925 | 1,880 |
| | 1 | 0 | 1 | 1 | 2,215 | 2,180 | 2,140 | 2,105 | 2,070 | 2,035 | 2,000 | 1,965 |
| | 0 | 1 | 1 | 1 | | | | | 2,225 | 2,165 | 2,100 | 2,040 |
| | 1 | 1 | 1 | 1 | | | | | | 2,170 | 2,120 | 2,065 |

***NOTES:**

1. Motor switch settings for heating speeds use HEAT switches 1, 2, 3, & 4 and for cooling speeds use COOL switches 5, 6, 7, & 8.
2. To comply with government mandated efficiency standards, two openings are required for airflows above 1,600 CFM.
3. Data is shown without filter.
4. Temperature rises in the table are approximate. Actual temperature rises may vary.
5. Individual cells shaded in gray indicate a temperature rise outside of the recommended range.
6. To comply with government mandated efficiency standards, speed settings shaded in gray are not allowed in HEAT mode.
7. When in low stage heat, the airflow is approximately 70% of the tables high value (2-stage furnaces only).

**ACCESSORIES**

| PGC2TE KITS | |
|---|---|
| **Description** | **SKU** |
| 2″ Concentric Vent Kit | 904177 |
| 3″ Concentric Vent Kit | 904176 |
| 2″ Concentric Vent Kit (Canadian Approved) | 904952 |
| 3″ Concentric Vent Kit (Canadian Approved) | 904953 |
| 2″ Side Wall Vent Kit | 904617 |
| 3″ Side Wall Vent Kit | 904347 |
| U.S. LP Conversion Kit (0 to 10,000 ft.) | 905028 |
| Canada LP Conversion Kit (0 to 4,500 ft.) | 905029 |
| Bottom Return Filter 20 per Box, “B” Cabinet | 904916 |
| Bottom Return Filter 20 per Box, “D” Cabinet | 904918 |
| Side Return Filter Kit | 541036 |
| Neutralizer Kit | 902377 |

**VENTING**

All models are approved for vertical non direct (1 pipe) and direct (2 pipe) venting applications. See Vent Table below for specified sizes and allowable lengths.

| FURNACE MODELS (BTU) | FURNACE INSTALLATION | SINGLE PIPE LENGTH (FT.) with 1 long radius elbow** | | DIRECT VENT, DUAL PIPE LENGTH (ft.) WITH 1 long radius elbow on each pipe** | |
|---|---|---|---|---|---|
| | | OUTLET | OUTLET | INLET/OUTLET | INLET/OUTLET |
| | | 2” Diameter | 3” Diameter | 2” Diameter | 3” Diameter |
| 60,000 | Upflow | 90 | 90 | 90 | 90 |
| 80,000 | Upflow | 40 | 90 | 40 | 90 |
| 100,000 | Upflow | 30 | 90 | 30 | 90 |
| 115,000 | Upflow | N/A | 90 | N/A | 90 |

***NOTES:**

1. Subtract 2.5 ft. for each additional 2 inch long radius elbow, 5 ft. for each additional 2 inch short radius elbow, 3.5 ft. for each additional 3 inch long radius elbow, and 7 ft. for each additional 3 inch short radius elbow. Subtract 5ft for each 2” tee and 8ft for each 3” tee.
2. Two 45 degree elbows are equivalent to one 90 degree elbow.
3. This table applies for elevations from sea level to 2,000 ft. For higher elevations, decrease pipe lengths by 8% per 1,000 ft of altitude.

HRAI MEMBER COMPANY

AHRI CERTIFIED www.ahridirectory.org Residential Furnaces DOE 10 CFR Part 430

DESIGN CERTIFIED

ENERGY STAR PARTNER

We Encourage Professionalism

Through Technician Certification by NATE

MAYTAG®

Before purchasing this appliance, read important energy cost and efficiency information available from your retailer. Specifications and illustrations subject to change without notice and without incurring obligations.

**Manufactured under license by Nortek Global HVAC, LLC, O’Fallon, MO. ®Registered Trademark/ ™ Trademark of Maytag Corporation or its related companies. © Nortek Global HVAC, LLC 2019. All rights reserved.**

®/™/© Maytag. All rights reserved. Manufactured under license by Nortek Global HVAC, LLC, Missouri, USA. Limited warranty provided by the manufacturer. © Nortek Global HVAC, LLC. All rights reserved.

www.maytaghvac.com

## Documents / Resources

| | |
|---|---|
|  | **MAYTAG PGC2TE Series Two Stage Fixed Speed ECM High Efficiency Upflow Gas Furnaces** [pdf] Owner's Manual<br>PGC2TE Series Two Stage Fixed Speed ECM High Efficiency Upflow Gas Furnaces, PGC2TE Series, Two Stage Fixed Speed ECM High Efficiency Upflow Gas Furnaces, Fixed Speed ECM High Efficiency Upflow Gas Furnaces, ECM High Efficiency Upflow Gas Furnaces, High Efficiency Upflow Gas Furnaces, Upflow Gas Furnaces, Gas Furnaces, Furnaces |

## References

- TCPDF
- User Manual

Manuals+, Privacy Policy