

OPTISYS CL 1100 Handbook

Free chlorine/chlorine dioxide/ozone measuring system

The documentation is only complete when used in combination with the relevant documentation for the signal converter.

© KROHNE 01/2012 - MA OPTISYS CL 1100 R01 en

KROHNE

IMPRINT

All rights reserved. It is prohibited to reproduce this documentation, or any part thereof, without the prior written authorisation of KROHNE Messtechnik GmbH.

Subject to change without notice.

Copyright 2011 by
KROHNE Messtechnik GmbH - Ludwig-Krohne-Str. 5 - 47058 Duisburg (Germany)

1 Safety instructions 5

1.1 Intended use ... 5
1.2 Safety instructions from the manufacturer ... 5
1.2.1 Copyright and data protection ... 5
1.2.2 Disclaimer ... 5
1.2.3 Product liability and warranty ... 7
1.2.4 Information concerning the documentation ... 7
1.2.5 Warnings and symbols used ... 8
1.3 Safety instructions for the operator ... 8

2 Device description 9

2.1 Scope of delivery ... 9
2.2 Device description of the system ... 10
2.3 Device description of the sensor ... 11
2.4 Nameplate ... 12

3 Installation 13

3.1 Notes on installation ... 13
3.2 Storage and transport ... 13
3.3 Pre-installation requirements ... 14
3.4 Installing the sensor ... 15
3.4.1 Mounting to OPTISYS CL 1100 measuring system ... 15
3.5 Examples of a typical measuring point ... 15

4 Electrical connections 16

4.1 Safety instructions ... 16
4.2 Connecting the cable to the sensor ... 16
4.3 Connecting the sensor cable to the signal converter ... 17
4.4 Connecting the external temperature sensor ... 18

5 Operation 19

5.1 Menu mode structure ... 19
5.2 Function tables ... 21
5.2.1 Menu A, quick setup ... 21
5.2.2 Menu B, test ... 22
5.2.3 Menu C, setup ... 23
5.3 Calibration ... 25
5.3.1 Calibration order ... 25
5.3.2 Temperature compensation ... 25
5.3.3 pH compensation ... 28
5.3.4 Calibrating the free chlorine/chlorine dioxide/ozone measurement ... 30
5.3.5 Calibration log ... 35
5.4 Troubleshooting ... 35

6 Service 36

6.1 Maintenance ... 36
6.1.1 Cleaning ... 36
6.1.2 Aging and re-calibration ... 37
6.2 Spare parts availability ... 37
6.3 Availability of services ... 37
6.4 Returning the device to the manufacturer ... 37
6.4.1 General information ... 37
6.4.2 Form (for copying) to accompany a returned device ... 39
6.5 Disposal ... 39

7 Technical data 40

7.1 Measuring principle ... 40
7.2 Technical data for the system ... 44
7.3 Technical data for the sensor ... 45
7.4 Dimensions and weights for the system ... 47
7.5 Dimensions for the sensor ... 48

1.1 Intended use



CAUTION!
Responsibility for the use of the measuring devices with regard to suitability, intended use and corrosion resistance of the used materials against the measured fluid lies solely with the operator.



INFORMATION!
The manufacturer is not liable for any damage resulting from improper use or use for other than the intended purpose.

The intended use of OPTISYS CL 1100 system is the measurement of free chlorine, chlorine dioxide or ozon in water applications.

1.2 Safety instructions from the manufacturer

1.2.1 Copyright and data protection

The contents of this document have been created with great care. Nevertheless, we provide no guarantee that the contents are correct, complete or up-to-date.

The contents and works in this document are subject to copyright. Contributions from third parties are identified as such. Reproduction, processing, dissemination and any type of use beyond what is permitted under copyright requires written authorisation from the respective author and/or the manufacturer.

The manufacturer tries always to observe the copyrights of others, and to draw on works created in-house or works in the public domain.

The collection of personal data (such as names, street addresses or e-mail addresses) in the manufacturer's documents is always on a voluntary basis whenever possible. Whenever feasible, it is always possible to make use of the offerings and services without providing any personal data.

We draw your attention to the fact that data transmission over the Internet (e.g. when communicating by e-mail) may involve gaps in security. It is not possible to protect such data completely against access by third parties.

We hereby expressly prohibit the use of the contact data published as part of our duty to publish an imprint for the purpose of sending us any advertising or informational materials that we have not expressly requested.

1.2.2 Disclaimer

The manufacturer will not be liable for any damage of any kind by using its product, including, but not limited to direct, indirect or incidental and consequential damages.

This disclaimer does not apply in case the manufacturer has acted on purpose or with gross negligence. In the event any applicable law does not allow such limitations on implied warranties or the exclusion of limitation of certain damages, you may, if such law applies to you, not be subject to some or all of the above disclaimer, exclusions or limitations.

Any product purchased from the manufacturer is warranted in accordance with the relevant product documentation and our Terms and Conditions of Sale.

The manufacturer reserves the right to alter the content of its documents, including this disclaimer in any way, at any time, for any reason, without prior notification, and will not be liable in any way for possible consequences of such changes.

1.2.3 Product liability and warranty

The operator shall bear responsibility for the suitability of the device for the specific purpose. The manufacturer accepts no liability for the consequences of misuse by the operator. Improper installation and operation of the devices (systems) will cause the warranty to be void. The respective "Standard Terms and Conditions" which form the basis for the sales contract shall also apply.

1.2.4 Information concerning the documentation

To prevent any injury to the user or damage to the device it is essential that you read the information in this document and observe applicable national standards, safety requirements and accident prevention regulations.

If this document is not in your native language and if you have any problems understanding the text, we advise you to contact your local office for assistance. The manufacturer can not accept responsibility for any damage or injury caused by misunderstanding of the information in this document.

This document is provided to help you establish operating conditions, which will permit safe and efficient use of this device. Special considerations and precautions are also described in the document, which appear in the form of underneath icons.

1.2.5 Warnings and symbols used

Safety warnings are indicated by the following symbols.



DANGER!
This information refers to the immediate danger when working with electricity.



DANGER!
This warning refers to the immediate danger of burns caused by heat or hot surfaces.



DANGER!
This warning refers to the immediate danger when using this device in a hazardous atmosphere.



DANGER!
These warnings must be observed without fail. Even partial disregard of this warning can lead to serious health problems and even death. There is also the risk of seriously damaging the device or parts of the operator's plant.



WARNING!
Disregarding this safety warning, even if only in part, poses the risk of serious health problems. There is also the risk of damaging the device or parts of the operator's plant.



CAUTION!
Disregarding these instructions can result in damage to the device or to parts of the operator's plant.



INFORMATION!
These instructions contain important information for the handling of the device.



LEGAL NOTICE!
This note contains information on statutory directives and standards.



- HANDLING
  This symbol designates all instructions for actions to be carried out by the operator in the specified sequence.

➲ RESULT
This symbol refers to all important consequences of the previous actions.

1.3 Safety instructions for the operator



WARNING!
In general, devices from the manufacturer may only be installed, commissioned, operated and maintained by properly trained and authorized personnel.
This document is provided to help you establish operating conditions, which will permit safe and efficient use of this device.

2.1 Scope of delivery

INFORMATION!
Inspect the cartons carefully for damages or signs of rough handling. Report damage to the carrier and to the local office of the manufacturer.

INFORMATION!
Do a check of the packing list to make sure that you have all the elements given in the order.

INFORMATION!
Look at the device nameplate to ensure that the device is delivered according to your order. Check for the correct supply voltage printed on the nameplate.

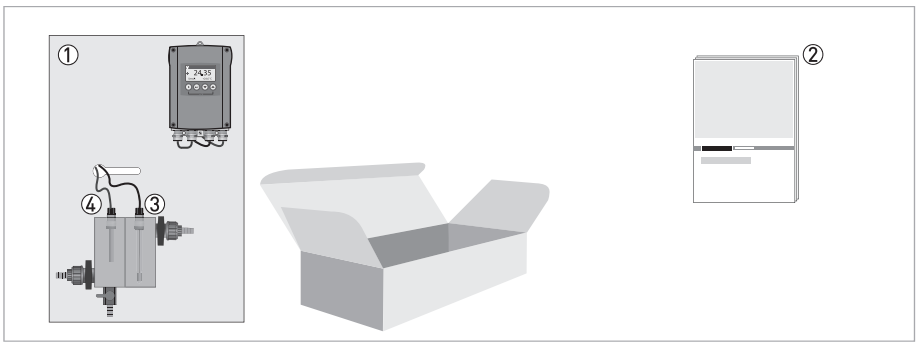

Figure 2-1: Standard scope of delivery

① Ordered system
② Documentation
③ OPTISENS CL 1100
④ Temperature sensor

Optional accessories

- Flow-through holder
- Sampling point
- Flow monitor
- Temperature sensor
- Automatic Sensor Cleaning (ASR, Patent Dr. A. Kuntze).

Consumables/Spare parts available

- OPTISENS CL 1100 sensor (Cl_2)
- OPTISENS CL 1100 sensor (ClO_2)
- OPTISENS CL 1100 sensor (O_3)

2.2 Device description of the system

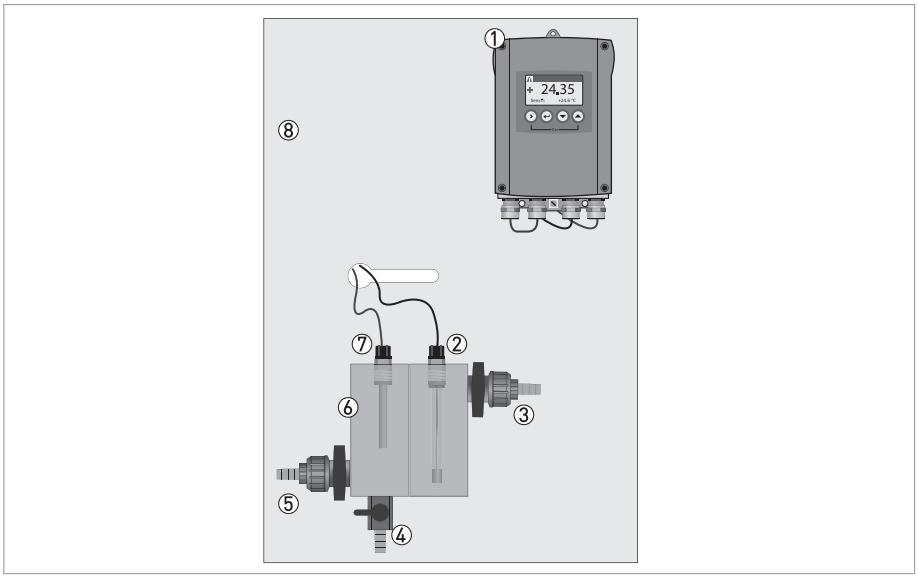

Figure 2-2: Dimension of OPTISYS CL 1100

① MAC 100 converter
② OPTISENS CL 1100 sensor with sensor cable CL-W 1100
③ outlet
④ sampling point
⑤ inlet
⑥ Flow through holders
⑦ temperature sensor with sensor cable
⑧ panel

The system for measuring free chlorine, chlorine dioxide or ozone is a ready to use and tested measuring system with integrated temperature sensor for compensation. As an option a pH measurement can be added as well as the Automatic Sensor Cleaning (ASR, Patent Dr. A. Kuntze). The sensors have to be installed and calibrated before use.

2.3 Device description of the sensor

The sensor for measuring free chlorine, chlorine dioxide or ozon is characterised by a robust design and extremely low maintenance requirements. The sensor comprise double gold electrodes and a low maintenance gel filling. The sensor measurement is virtually flow independent above 30 l/h (7.93 gal/h), the optimum is a stable flow between 50...150 l/h (13.21 gal/h...39.63 gal/h).

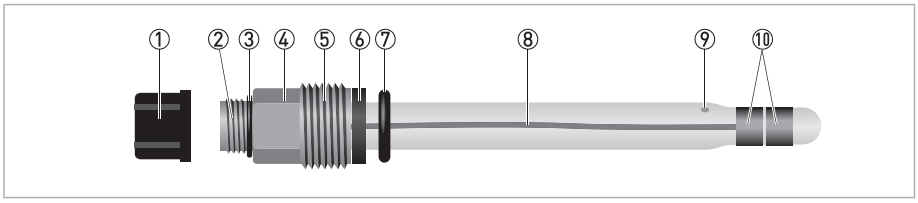

Figure 2-3: Overview of the electrode

① Protective cap over electrical connector
② Electrical connector
③ O-ring
④ Hexagonal nut to screw in sensor by hand
⑤ Sensor thread
⑥ Washer
⑦ O-ring
⑧ Glass tube
⑨ Diaphragm
⑩ Gold electrode

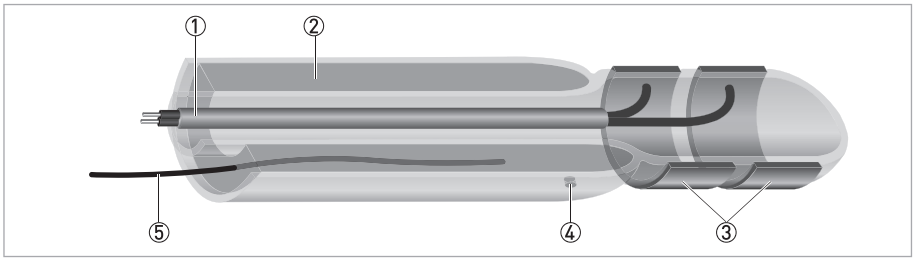

Figure 2-4: Inner parts of the electrode

① Connections of the measuring and counter electrode in the inner glass tube
② Gel filling of the outer glass tube
③ Measuring and counter electrode (gold)
④ Diaphragm
⑤ Reference electrode

The sensor is equipped with the patented Automatic Sensor Cleaning (ASR, Patent Dr. A. Kuntze). An electrochemical process causes outgassing on the gold electrodes, dissolving even tough coatings such as lime deposits. The ASR considerably increases the life span of the sensors, achieving high measuring stability with extremely low maintenance requirements.

2.4 Nameplate



INFORMATION!
Look at the device nameplate to ensure that the device is delivered according to your order. Check for the correct supply voltage printed on the nameplate.

The system type is specified on the labelling of the measuring system package and on the measuring system itself.

3.1 Notes on installation

INFORMATION!
Inspect the cartons carefully for damages or signs of rough handling. Report damage to the carrier and to the local office of the manufacturer.

INFORMATION!
Do a check of the packing list to make sure that you have all the elements given in the order.

INFORMATION!
Look at the device nameplate to ensure that the device is delivered according to your order. Check for the correct supply voltage printed on the nameplate.

3.2 Storage and transport

CAUTION!
Do not store the sensor tip dry. This will shorten the lifetime considerably.
Always store the sensor tip wet in a 3 molar KCl solution when not in use. Saltless water must be avoided since this would leak the KCl ions. The original packing in which the sensor tip was delivered contains a plastic tube with KCl solution and therefore is suitable for storage and transport (refer to following drawing).

- Since the sensor is made out of glass it is very fragile. Avoid shocks of any kind.
- Do not touch or scratch the gold electrode.
- Store the sensor in its original packing in a dry, dust-free location. Keep it away from dirt. If necessary, clean it as described on page 36.

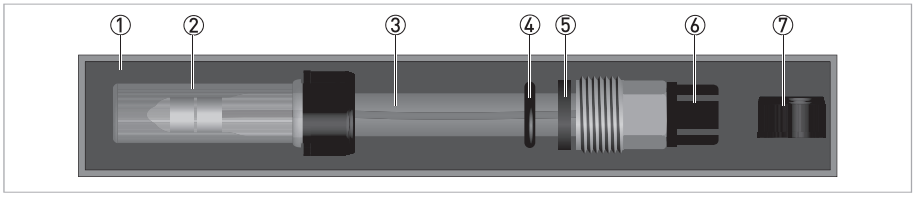

Figure 3-1: Chlorine electrode in its original packing

① Padding
② Plastic tube filled with 3 molar KCl solution
③ Electrode
④ O-ring
⑤ Washer
⑥ Protective cap over electrical connector
⑦ Sealing cap without hole to seal plastic tube ② when electrode is in use

Storing the sensor in the provided plastic tube

- Screw the sealing cap off the plastic tube. Keep it in the original packing.
- If there is not enough KCl solution in the plastic tube, fill it up with 3 molar KCl solution.
- Insert the sensor tip through the hole in the storage cap (refer to drawing on page 14).
- Carefully push the O-ring delivered with the storage cap on the sensor so that the cap sits over the O-ring.
- Insert the sensor tip into the plastic tube until it is fully covered with KCI solution.
- Tighten the cap.
- Store the sensor in its original packing.

3.3 Pre-installation requirements

CAUTION!

- *Do not touch or scratch the gold electrodes of the sensor.*
- *Make sure that the gold electrodes are clean and dust-free. If necessary, clean the tip as described on page 36.*

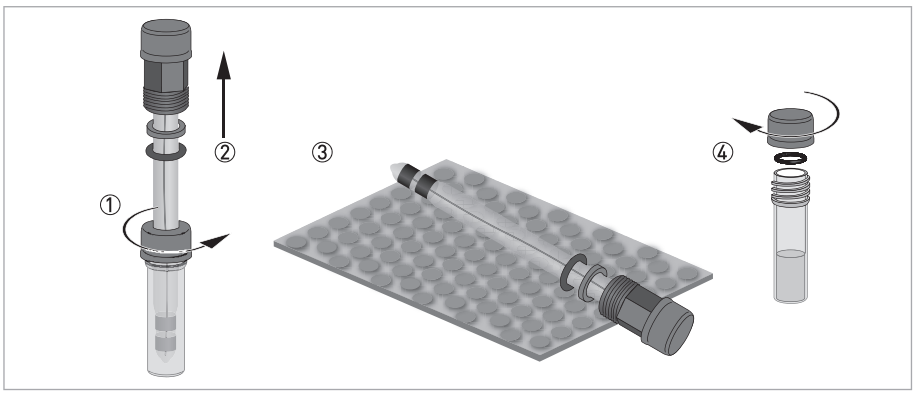

Figure 3-2: Handling the electrode

Unpacking the electrode

- Loosen the storage cap which is screwed on to the plastic tube ①.
- Gently pull the sensor out of the plastic tube ②.
- Lay the sensor on a soft mat/tissue ③.
- Screw the provided sealing cap on to the plastic tube, using O-ring and washer as pictured in the drawing ④. Keep the storage cap (the one with the hole in it) in the original packing.

3.4 Installing the sensor

3.4.1 Mounting to OPTISYS CL 1100 measuring system

The measuring system is delivered ready-to-use. it can be mounted in a distance of 20mm (0,79") to a wall via 4 predrilled holes.

Water connection

Connect the water inlet on the left side and the outlet on the right side of the flow cell. The outlet can be an open outlet (pressureless) or the water can be re-directed into a pipe or basin.

CAUTION!
Install the instrument at a place where mechanical and chemical stress is limited.
Mind the protection class: IP 65 (with closed terminal cover)

CAUTION!
The sensors are delivered with protective caps, which have to be removed before mounting into the flow cell.

3.5 Examples of a typical measuring point

The following drawing show an example of a typical measuring point consisting of a sensor and the flow through holder.

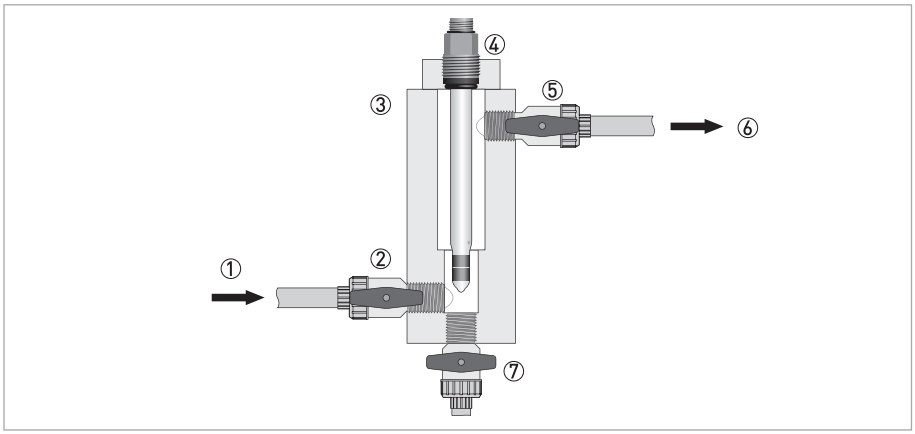

Figure 3-3: Measuring point using the cell of the OPTISYS CL 1100 measuring system

① Inlet
② Inlet valve
③ Measuring cell of the OPTISYS CL 1100 measuring system
④ Sensor with connection to signal converter
⑤ Outlet valve
⑥ Outlet
⑦ Sample outlet

4.1 Safety instructions

DANGER!
All work on the electrical connections may only be carried out with the power disconnected. Take note of the voltage data on the nameplate!

DANGER!
Observe the national regulations for electrical installations!

WARNING!
Observe without fail the local occupational health and safety regulations. Any work done on the electrical components of the measuring device may only be carried out by properly trained specialists.

INFORMATION!
Look at the device nameplate to ensure that the device is delivered according to your order. Check for the correct supply voltage printed on the nameplate.

4.2 Connecting the cable to the sensor

CAUTION!
Avoid moisture inside the sensor connection. If moisture has entered the connector, clean it with pure water and then dry it with air (e.g. hair blower).

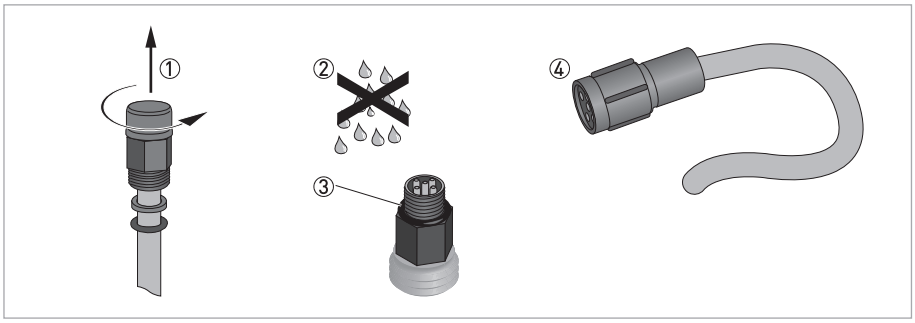

Figure 4-1: Connecting the cable to the sensor

- Unscrew the protective cap from the sensor connector and keep it for future use ①.
- Ensure that both cable and sensor connector are dry ②.
- Make sure that the O-ring is positioned on the sensor connector ③.
- Push the cable connector ④ on to the sensor.
- Screw the cable connector to the sensor and tighten it by hand.

4.3 Connecting the sensor cable to the signal converter

DANGER!
All work on the electrical connections may only be carried out with the power disconnected. Take note of the voltage data on the nameplate!

INFORMATION!
Look at the device nameplate to ensure that the device is delivered according to your order. Check for the correct supply voltage printed on the nameplate.

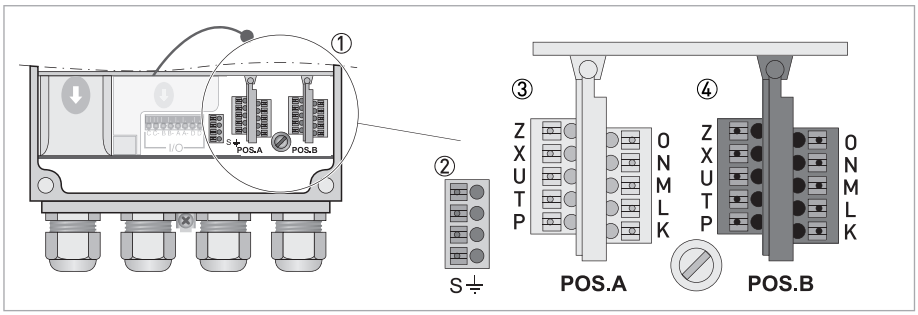

Figure 4-2: Sensor connection terminals on the signal converter

① Sensor connection terminals
② Terminal block S (protective earth)
③ Terminal block Pos.A: terminal for OPTISENS CL 1100 sensor and temperature
④ Terminal block Pos.B: terminal for sensor and temperature

The sensors for free chlorine, chlorine dioxide or ozone are always connected to terminal block Pos.A of the signal converter. Depending on the configuration of the signal converter, a pH sensor may be connected to terminal block Pos.B. An external temperature sensor may be connected to terminal block Pos.A. (For detailed information how to install and configure a pH and/or a temperature sensor please refer to the pH sensor documentation.)

Wire	Terminal block Pos.A
blue	K (counter electrode)
white	L (reference electrode)
brown	M (measuring electrode)

Wire	Terminal block S
coax shield	S (protective earth)

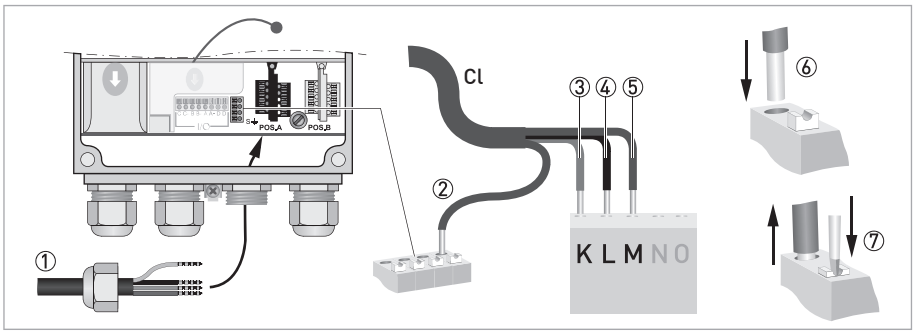

Figure 4-3: Connecting the 4-wire coax cable

Connecting the sensor cable to the signal converter

- Thread the sensor cable through the middle right cable gland ①.
- Push the coax shield cable ⑥ into one of the terminals of terminal block S ②.
- Push the blue ③, white ④, and brown ⑤ wire into the terminals of terminal block Pos.A as described in the previous drawing/table.
- To remove a cable, press down the white clip ⑦ on the corresponding terminal and pull the cable out.

4.4 Connecting the external temperature sensor

Connect an external Pt100 or Pt1000 sensor to terminal block Pos.A/B of the signal converter according to the following drawings:

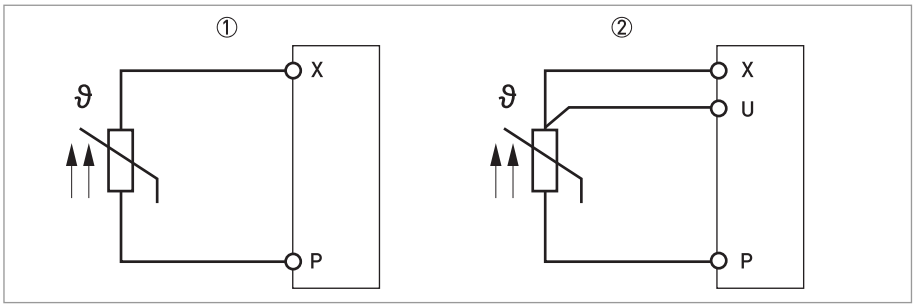

Figure 4-4: Connection of an external Pt100/1000 temperature sensor to the signal converter

① 2-wire connection
② 3-wire connection

5.1 Menu mode structure

INFORMATION!
The following table just presents an overview. When programming the device, always consult the function tables additionally as they contain further information!
Only the sensor relevant menus are shown in the following tables. For detailed information about the general setting refer to the signal converter manual.

Measuring mode	Main menu		Submenu				Parameter	
3 or 4 pages, scrolling with ↓ or ↑	> 2.5 s ↵	**A quick setup**	> ↵	A9 product cal.A process input A product calibration (Cl_2/ClO_2/O_3)	> ↵	A9.1 temp.comp.	> ↵	For further information see function tables.
						A9.4 pH compensation		
						A9.6 start calib.		
						A9.7 stored value		
						A9.8 reference		
				A12 REDOX calibration B **Only if switched to ORP!** process input B REDOX calibration (for 2 channel version; refer to pH/ORP sensor documentation for further information)				
				A13 pH cal. B process input B pH calibration (for 2 channel version; refer to pH/ORP sensor documentation for further information)		A13.1 temp.comp.		
		↓↑		↓↑		↓↑		↓↑
	> 2.5 s ↵	**B test**	> ↵	B1 sim.process inp.A	> ↵	B1.1 temperature	> ↵	For further information see function tables.
						B1.4 conc.absolute		
				B2 sim.process inp.B		B2.1 temperature		
						B2.5 REDOX/ORP **Only if switched to ORP!** (for 2 channel version; refer to pH/ORP sensor documentation for further information)		
						B2.7 pH (for 2 channel version; refer to pH/ORP sensor manual for further information)		
				B3 simulation I/O		B3.1 current out A		
						B3.2 current out B		
						B3.3 current out C		
						B3.6 simulation R3 off		

Measuring mode	Main menu		Submenu			Parameter	
			B4 actual values		B4.1 operating hours		
					B4.2 process input A		
					B4.2.1 temperature		
					B4.2.6 concentration (Cl_2/ClO_2/O_3)		
					B4.2.9 CPU temp. (depends on V number)		
					B4.2.11 electrode current (µA)		
					B4.3 process input B		
					B4.3.1 temperature		
					B4.3.2 pH		
					B4.3.9 CPU temp. (depends on V number)		
					B4.3.11 elctrode current (µA)		
			B5 logbooks		B5.1 status log		
					B5.2 calibration log		
			B6 information		B6.1 C number		
					B6.2 process input A		
					B6.3 process input B		
					B6.4 SW.REV.MS		
					B6.5 SW.REV.UIS		
					B6.6 Electronic Revision ER		
		↓↑		↓↑	↓↑		↓↑

Measuring mode	Main menu		Submenu				Parameter	
3 or 4 pages, scrolling with ↓ or ↑	> 2.5 s ↵	**C setup**	> ↵	C1 process input A	> ↵	C1.1 parameter	> ↵	For further information see function tables.
						C1.9 slope		
						C1.11 pH compensation		
						C1.13 cleaning		
						C1.14 time constant		
						C1.15 temperature		
						C1.18 product cal.		
				C2 process input B (for 2 channel version; refer to pH/ORP sensor manual for further information)		C2.1 parameter (pH/REDOX)		
						C2.7 inner buffer (only pH)		
						C2.8 zero point		
						C2.9 slope		
						C2.10 calibration buffer (only pH)		
						C2.14 time constant		
						C2.15 temperature (only pH)		
						C2.16 REDOX cal.		
						C2.17 pH cal.		
		↓↑		↓↑		↓↑		↓↑

5.2 Function tables

5.2.1 Menu A, quick setup

INFORMATION!
Note that the appearance of some sub-menus depends on the hardware setting and the used sensor(s). Also only the sensor relevant menus and submenus are shown here in detail. For all other menu functions refer to the MAC 100 documentation .

A9, process input A product calibration (Cl_2/ClO_2/O_3)

For 1 or 2 channel version: Settings for sensor calibration

A12, process input B REDOX calibration

For 2 channel version; refer to pH/ORP sensor manual for further information.
Only if switched to ORP!

A13, process input B pH calibration

For 2 channel version; refer to pH/ORP sensor manual for further information.

5.2.2 Menu B, test

INFORMATION!
Note that the appearance of some sub-menus depends on the hardware setting and the used sensor(s). Also only the sensor relevant menus and sub-menus are shown here in detail. For all other menu functions refer to the converter manual.

The procedure to start the simulation process is the same for all functions:

- Choose the function with the help of ↓ or ↑ and press ↵.

➲ You see the two options "set value" (opens the editor to enter the simulation value) and "break" (exits the menu without simulation).

- Choose the desired option with the help of ↑ or ↓ and press ↵.

➲ If you chose "set value", the device asks "start simulation" and offers the options "no" (exits the menu without simulation) or "yes" (starts the simulation finally).

- Choose the desired option with the help of ↑ or ↓ and press ↵.

➲ If you chose "yes", the simulation starts.

B1, sim.process inp.A
B2, sim.process inp.B

Level	Designation / function	Settings / descriptions
B1.1 **B2.1**	temperature	In this menu the temperature can be simulated.
B1.4 **B2.4**	conc.absolute	In this menu the concentration can be simulated.
B2.5	REDOX/ORP	In this menu the relative concentration of REDOX/ORP can be simulated. For 2 channel version only; refer to pH/ORP sensor manual for further information. ONLY if switched to ORP.
B2.7	pH	In this menu the relative concentration of pH can be simulated. For 2 channel version only; refer to pH/ORP sensor manual for further information.

B4, actual values

Level	Designation / function	Settings / descriptions
This menu groups several functions which allow to display the corresponding actual reading. The shown measurements are depending on the device configuration.		
B4.1	operating hours	This menu shows the operating time of the devices in hours.
B4.2	process input A	In this menu the measurements from process input A can be read.
B4.3	process input B	In this menu the measurements from process input B can be read.
		For 2 channel version only; refer to pH/ORP sensor manual for further information.

5.2.3 Menu C, setup

INFORMATION!
The signal converter has two process inputs, A and B. Each process input has an own submenu in this main menu. Process input A is always present, i.e. there is always a board in the interface "Pos.A" in the connection area. The interface of process input B only has a board with the two channel signal converter. Be aware that the definition which kind of measurement a process input can do is defined when ordering the device. The configuration cannot be changed later.

INFORMATION!
Note that the appearance of some submenus depends on the hardware setting and the used sensor(s).

C1, process input A
C2, process input B

Level	Designation / function	Settings / descriptions
Process input A and B can be either a sensor 1 or a sensor 2. Further information about the type of sensor 1 or 2 please refer to MAC 100 manual "Sensor input combinations". Process input A is always present, process Input B can be present. Note: The exchange of a sensors 1 with a sensor 2, or vice versa, can only be done by the manufacturer! Depending on the sensor which is connected to a slot A or B the menu changes.		
C1.1	parameter (Cl_2/ClO_2/O_3)	This menu item is for selecting the probe which is connected to process input A. The entries of this selection depends on the chosen device configuration. The device configuration is customer specific and set during production.
C1.9	slope	This menu item is read only. It is used for the calibration procedure.
C1.11	pH compensation	The pH compensation menu is used for calibration of the pH sensor. For detailed information refer to *pH compensation* on page 28.
		Options: • off (default setting): pH compensation is disabled • manual: pH influences are compensated with manually entered values • automatic: pH influences are compensated automatically using the value from a pH sensor which is connected to input B
C1.12	man. pH compensation	If in menu C1.11 the pH compensation was set to **manual**, here the desired pH value is entered manually.
C1.13	cleaning	In this menu the cleaning parameters are set. For detailed information and the cleaning procedure refer to *Cleaning* on page 36.
C1.13.1	cleaning	Options: • off: cleaning is disabled • 24h period: cleaning is performed every 24 hours. (once a day) • 12h period: cleaning is performed every 12 hours. • 8h period: cleaning is performed every 8 hours.
C1.13.2	start time	Time: Time of day: cleaning is started at manually entered time. The start time of the cleaning procedure can be postpone.
C1.13.3	clean hold	Hold time [s] after cleaning. If measurement after cleaning has not approximated to 10% of old value, hold time is retriggered up to two times.

Level	Designation / function	Settings / descriptions
C1.13.4	clean	Start cleaning procedure, manually.
C1.15 **C2.15**	temperature	Menu for temperature measurement. Available for sensor 1 and sensor 2.
C1.15.1 C2.15.1	probe	Options: • manual: used if no internal or external temperature sensor is connected to the signal converter • Pt100: used if the pH electrode has an integrated Pt temperature measurement or if an external Pt100 temperature sensor is connected to the signal converter • Pt1000: used if an external Pt1000 temperature sensor is connected to the signal converter
C1.15.2 C2.15.2	manual	Only available if C1.15.1 or C2.15.1 is set to "manual".
C1.15.3 C2.15.3	correction	Offset correction for temperature measurement. Not available if C1.15.1 or C2.15.1 is set to "manual".
C1.15.4 C2.15.4	limitation	Measuring ranges for temperature measurement.
C1.15.5 C2.15.5	temp. comp.	Menu for activating the temperature compensation parameters. For detailed information refer to *Temperature compensation* on page 25.
		Options: • linear: linear temperature compensation. • off: temperature compensation is disabled.
C1.18	product calibration	For detailed information refer to *Calibration* on page 25.
C1.18.1	temp.comp	Menu for activating the temperature compensation parameters for the calibration.
		Options: • off: temperature measurement is disabled • manual: temperature value has to be entered manually • automatic: temperature measurement is performed as configured
C1.18.2	temperature	Menu for setup of manual temperature measurement
C1.18.3	temp. coefficient	Temperature coefficient for manual temperature compensation during calibration.
C1.18.4	pH compensation	Options: • off: pH measurement is disabled • manual: pH value has to be entered manually • automatic: pH measurement is performed as configured
C1.18.5	man. pH compensation	If in menu C1.18.4 the pH compensation was set to manual, here the desired pH value is entered manually.
C1.18.6	start calibration	Start calibration procedure.
C1.18.7	stored value	View stored value of calibration.
C1.18.8	reference	Enter the reference value of the probe in mg/L.



CAUTION!

If you choose for measurement the temperature compensation "linear" than choose between "automatic" or "manual" for the temperature compensation during calibration. If you choose for measurement the temperature compensation "off" than choose also "off" for the temperature compensation during calibration.

5.3 Calibration

5.3.1 Calibration order

If you are also measuring the temperature and pH value of the measuring medium, it is essential to calibrate in the following order, otherwise start with 3. calibrate the sensor:

1. Calibrate temperature measurement as described on the following pages.
2. Calibrate pH measurement (refer to the manual of the pH sensor).
3. Calibrate the sensor as described on the following pages.

5.3.2 Temperature compensation

2 option for temperature compensation during measurement:

- **linear:** linear temperature compensation.
- **off:** temperature compensation is disabled.

3 option for temperature compensation during calibration:

- **automatic**: the signal converter will automatically compensate temperature influence using the information of a Pt100 or Pt1000 temperature sensor.
- **manual:** the signal converter will compensate temperature influence using a manually entered value; this option only makes sense if the temperature of the measured medium is quite constant.
- **off:** temperature compensation is disabled.

INFORMATION!

- *The measurement is temperature dependent due to the linear temperature compensation. The linear temperature compensation compensates the influence of the ion velocity.*
- *Please note that the temperature sensor should always record the temperature where the measuring electrodes are exposed.*
- *If you activate the temperature c the temperature coefficient can be changed. The presetting is based on drinking water: 3%/°K. You have to change the presetting if the medium is not drinking water. The coefficient depends on the hardness and the ion velocity of the medium.*
- *If you choose no compensation, the measured Cl_2, ClO_2 or O_3 concentration will most likely deviate from the actual Cl_2, ClO_2 or O_3 concentration. The reason is that the Cl_2, ClO_2 or O_3 concentration of a specific medium varies depending on the temperature of the medium.*

The menu for the type of linear temperature probes offer the following options:

- **Pt1000**: choose this option if there is an external Pt1000 temperature sensor connected to the signal converter.
- **Pt100**: choose this option if the pH electrode has an integrated Pt100 temperature measurement or if there is an external Pt100 temperature sensor connected to the signal converter.
- **manual**: choose this option if there is no internal or external temperature sensor connected to the signal converter.

After starting-up the signal converter, the measuring screen appears. This is the standard screen which is displayed automatically in the normal operating mode. If you are in this mode and you want to adjust the temperature compensation, you have to perform the following steps:

Step 1: activating the temperature compensation for measurement

Press **>** for more than 2.5 seconds, then release the button. You are now on the main menu level. In the upper line on the right side of the display "A" appears, beneath the main menu **quick setup** is highlighted.				
Press ▼ or ▲ until the main menu **setup** is highlighted.				
	MAIN MENU			
	A quick setup B test **> C setup** D service			
	Press **>** to enter the chosen menu.			
		You are on the first submenu level. In the upper line of the display "setup" and "C1" appears, beneath the submenu **process input A** is highlighted.		
		Press **>** to enter the chosen menu.		
			You are on the second submenu level. In the submenu **parameter** (Cl_2/ClO_2/O_3) is highlighted.	
			Use ▲ or ▼ until the submenu **temperature** is highlighted.	
			Press **>** to enter the chosen menu.	
			You are on the parameter level. In the upper line of the display "temperature" and "C1.15.1" or "C2.15.1"appears, beneath the option **probe** is highlighted.	
			Use ▲ or ▼ until the menu item **temp. comp.** is highlighted.	
			Press **>** to enter the chosen menu.	
				Now you can set up the temperature compensation.
				Press ▲ or ▼ to choose between **linear** and **off**.
				Pres ↵ to confirm the entered value.
			If you have chosen the option linear, you can select the type of temperature compensation now.	
			Press ▲ or ▼ until menu item **temp.coefficient** is highlighted.	
			Enter the value and press ↵ to confirm the value.	
			Press ▲ or ▼ to choose **probe**.	
			Press **>** to enter the chosen menu.	
				Press ▲ or ▼ to choose between Pt1000, Pt100 or manual.
				Press ↵ to confirm the entered value.

Press ↵ several time until you reach the measuring mode again. Choose **yes** to safe and confirm your selection.

Step 2: Configure/adjust the temperature sensor for measurement

Step 2a: **probe Pt100** or **Pt1000:**			
Read the currently measured temperature of the Pt100 / Pt1000 temperature sensor from the measurement screen and write it down.			
Measure the temperature with a reference thermometer and check if it deviates from the temperature measured by the Pt100 / Pt1000.			
Press **>** for more than 2.5 seconds, then release the button. You are now on the main menu level. Press ▼ or ▲ until the main menu **setup** is highlighted.			
	MAIN MENU		
	A quick setup B test **> C setup** D service		
	Press **>** to enter the chosen menu.		
		You are on the first submenu level. In the upper line of the display "SETUP" and "C1" appears, beneath the submenu **process input A** is highlighted.	
		Press **>** to enter the chosen menu **process input A**.	
		Press ▼ or ▲ until the main menu **temperature** is highlighted.	
		Press **>** to enter the chosen menu. The submenu **probe Pt100 / 1000** is highlighted.	
			Press ▼ or ▲ until the submenu **correction** is highlighted.
			Press **>** to enter the chosen menu.

Press ↵ to confirm the entered value. The temperature sensor has been adjusted.

If necessary, enter the temperature correction in Kelvin so that the signal converter shows the same temperature as the reference thermometer.

INFORMATION!
A separate temperature sensor has to be connected to "Pos.A" and configurated on process input A.

Step 2b: **probe manual:**			
Measure the temperature of the measuring medium.			
Press **>** for more than 2.5 seconds, then release the button. You are now on the main menu level. Press ▼ or ▲ until the main menu **setup** is highlighted.			
	MAIN MENU		
	A quick setup B test **> C setup** D service		
	Press **>** to enter the chosen menu.		
		You are on the first submenu level. In the upper line of the display "SETUP" and "C1" appears, beneath the submenu **process input A** is highlighted.	
		Press **>** to enter the chosen menu **process input A**.	
		Press ▼ or ▲ until the submenu **temperature** is highlighted.	
		Press **>** to enter the chosen menu. The submenu **probe manual** is highlighted.	
			Press ▼ or ▲ until the submenu **manual** is highlighted.
			Press **>** to enter the chosen menu.

Enter the measured temperature.

Press ↵ to confirm the entered value. The manually measured temperature will now be used for temperature compensation.

5.3.3 pH compensation

INFORMATION!
The pH compensation is only necessary for the measurement of free chlorine.

The menu for the pH compensation offers 3 different options:

- **automatic:** the signal converter compensates pH influences on the free chlorine measurement automatically using the value from a pH sensor connected to input B. This allows a stable free chlorine measurement in water with changing pH values. Though this kind of compensation can neither change the effect that the signal output decreases at higher pH values nor that the disinfection ability of free chlorine decreases with increasing pH values. As a principle the manufacturer recommends an automatic compensation if the pH value of the measured medium is between pH 8 and 8.5 with temporal variations.
- **manual:** the signal converter compensates pH influences using a manually entered value. This kind of compensation makes sense if you know the pH value, if it is stable and outside the neutral range.
- **off (default setting):** the pH compensation is disabled. This option makes sense if the pH value is more or less stable or in the neutral range (around pH 7). If the pH compensation is disabled and you use a reference method (like DPD) which compensates the pH influence, you calibrate this difference in. Hence if the pH value now changes, the calibration is not valid anymore. However for slight pH changes around pH 7 this effect is only marginal, but for drastic changes a new calibration is necessary. If those changes happen frequently, you should select one of the other compensation methods.

DANGER!
Whenever you change the compensation method, a recalibration of the sensor input is necessary. Otherwise the device displays a wrong measured value. If you use this wrong measured value for dosing of disinfecting agents, this could result in fatal injuries.

INFORMATION!
Also note the following items concerning the pH compensation:

- *If you choose an automatic pH compensation for input A, you should calibrate the pH sensor connected to input B before you choose this kind of compensation. Therefore refer to the manual of the pH sensor.*
- *Both the automatic and the manual function compensate the displayed value of the free chlorine concentration to 100% HOCl at pH = 6.0. Hence for a correct calibration the reference value should compensate the pH value in the same manner.*
- *Keep in mind that if you use a pH electrode connected to input B, it has to be re-calibrated in regular intervals.*
- *For additional information concerning the effect of the pH value refer to Measuring principle on page 40.*

Please consider that you can activate the pH compensation for measurement and separably for the calibration.

After starting-up the signal converter, the measuring screen appears. This is the standard screen which is displayed automatically in the normal operating mode. If you are in this mode and you want to adjust the pH compensation, you have to perform the following steps:

Step 1: activating the pH compensation for measurement

Press **>** for more than 2.5 seconds, then release the button. You are on the main menu level. In the upper line of the display "A" appears, beneath the main menu **quick setup** is highlighted.			
Press ▼ or ▲ until the main menu **setup** is highlighted.			
	MAIN MENU		
	A quick setup B test **> C setup** D service		
	Press **>** to enter the chosen menu.		
		You are on the first submenu level. In the upper line of the display "setup" and "C1" appears, beneath the submenu **process input A** is highlighted.	
		Press **>** to enter the chosen menu.	
		Press ▼ or ▲ until the submenu **pH compensation** is highlighted.	
		Press **>** to enter the chosen menu.	
			Press ▼ or ▲ to choose between **"automatic", "manual"** or **"off"**.
			Press ↵ to confirm the entered value.

If you want to return to the measuring mode, press ↵ several times.



Step 2: entering a pH value manually

- If you have activated the manual pH compensation as described in the previous step, you can enter a pH value using ▼ or ▲.
- Press ↵ to confirm the value.

➲ The manually entered pH value will be used for pH compensation.

- If you want to return to the measuring mode, press ↵ several times.

5.3.4 Calibrating the free chlorine/chlorine dioxide/ozone measurement

Calibration is necessary in regular intervals or when installing a new sensor.



INFORMATION!
When calibrating a free chlorine/chlorine dioxide/ozone measurement, keep in mind that the measuring system as a whole is calibrated, and not only the sensor. Therefore the measuring system has to be re-calibrated if, for example, the measuring medium changes.

To avoid alarms on the distributed control system (DLC) when temporary removing the sensor (i.e. for maintenance), the signal converter has a hold function. This function "freezes" all outputs (i.e. the display and the current outputs) on the last measured value.



INFORMATION!
As an indication that the manual hold function is active, the "warning sign" in the upper left corner of the display appears. Meanwhile the status messages show "checks in progress".

After starting-up the signal converter, the measuring screen appears. This is the standard screen which is displayed automatically in the normal operating mode. If you are in this mode and you want to initiate a calibration, you have to activate the manual hold function performing the following steps:

Step 1: activating the manual hold function

Press **>** for more than 2.5 seconds, then release the button. You are on the main menu level. In the upper line on the right side of the display "A" appears, beneath the main menu **quick setup** is highlighted.			
	MAIN MENU		
	> A quick setup B test C setup D service		
	Press **>** to enter the chosen menu.		
		You are on the first submenu level. In the upper line of the display "quick setup" and "A1" appears, beneath the submenu **language** is highlighted.	
		Press ▼ or ▲ until the submenu **manual hold** is highlighted.	
		Press **>** to enter the chosen menu.	
			You are on the parameter level. The option **off** is highlighted.
			Press ▼ or ▲ to choose the option **on**.
			Press ↵ to confirm your selection.

You have activated the manual hold function. To perform the next step and prepare the calibration procedure you have to return to the measuring mode.
Press ↵ until you reach the measuring mode again.

Step 2: preparing the calibration procedure

- If you calibrate a new sensor, make sure that the sensor is correctly connected to the signal converter.
- Check the sensor for damages or dirt deposits.
- During the calibration procedure, you will have to take a sample. Provide a suitable sample vessel.

After activating the manual hold function and the preparative measures, you can get access to the calibration procedure from the measuring mode in two different ways. Either you go via the main menu **setup** (Step 3a) or via the main menu **quick setup** (Step 3b):

Step 3a: accessing the calibration menu via the main menu "setup"

Press **>** for more than 2.5 seconds, then release the button. You are on the main menu level. In the upper line of the display "A" appears, beneath the main menu **quick setup** is highlighted.				
Press ▼ or ▲ until the main menu **setup** is highlighted.				
	MAIN MENU A quick setup B test **> C setup** D service			
	Press **>** to enter the chosen menu.			
		You are on the first submenu level. In the upper line of the display "setup" and "C1" appears, beneath the submenu **process input A** is highlighted.		
		Press **>** to enter the chosen menu.		
			You are on the second submenu level. The submenu **parameter** is highlighted.	
			Press **>** to enter the chosen menu.	
				Press ▼ or ▲ to select **Cl_2** for calibrating the free chlorine measurement, **ClO_2** for calibrating the chlorine dioxide measurement or **O_3** for calibrating the ozon measurement.
				Press ↵ to confirm the entered value.
				Press ▼ or ▲ until the submenu **product cal.** is highlighted.

You can start the calibration procedure now as described in "Step 4".

Step 3b: accessing the calibration menu via the main menu "quick setup"

Press **>** for more than 2.5 seconds, then release the button. You are on the main menu level. In the upper line of the display "A" appears, beneath the main menu **quick setup** is highlighted.		
	MAIN MENU **> A quick setup** B test C setup D service	
	Press **>** to enter the chosen menu.	
		You are on the first submenu level. In the upper line of the display "quick setup" and "A" appears, beneath the submenu **language** is highlighted.
		Press ▼ or ▲ until the submenu **product cal. A** is highlighted.
		Press **>** to enter the chosen menu.

You can start the calibration procedure now as described in "Step 4".

CAUTION!
When calibrating the Cl_2 measurement, the temperature and pH compensation have to be configurated.

Step 4: calibration procedure

- After choosing the submenu **product cal.** (step 3a) or **product cal. A** (step 3b) in the previous steps, continue by pressing **>**.

➲ The signal converter demands to choose the kind of temperature compensation for calibration. You have the options "automatic", "manual" and "off" (for detailed information refer to *Temperature compensation* on page 25).

- If you chose "automatic", just press ↵. If you chose "manual", first enter the temperature of the measured medium using ▼ or ▲ and then press ↵.

➲ The signal converter demands to choose the kind of pH compensation. You have the following options: "automatic", "manual" and "off" (for detailed information refer to *pH compensation* on page 28).

- If you chose "automatic", just press ↵. If you chose "manual", first enter the pH value of the measured medium using ▼ or ▲ and then press ↵.
- Press ▼ or ▲ until the submenu **start calib.**highlighted .
  Press **>** to enter the chosen menu

➲ The measured value appears on the display.

- Assure that the measured medium flows with at least 30 litres per hour; if necessary wait until the measured value is stable.
- Once the measured value is stable, press ↵ and wait 25 seconds.

➲ The signal converter now asks **store value?**

- Choose **yes** using ▼ or ▲ and then press ↵.

➲ The signal converter now performs a measurement which takes 25 seconds. Carry out the next action during this time.

To perform a successful calibration please consider the installation of the sensor (for detailed information refer to *Installing the sensor* on page 15).

1. Mounting in an outlet pipe
You can start with the calibration. While the signal converter performs a measurement (25 seconds), take a sample of the measured medium. Determine the free chlorine/chlorine dioxide/ozon concentration in a laboratory using the DPD method according to DIN EN ISO 7393 - 2. If the laboratory test is not possible immediately, you can leave the calibration menu and go back into the measuring mode (the measured value at the time of taking the sample is stored and can be checked in the menu point "stored value").

2. Mounting in a bypass or direct pipe
Before starting the calibration procedure close the outlet valve and open the probe valve to take a sample. Proceed as mentioned under "1. Mounting in an outlet pipe".

INFORMATION!
The "stored value" is a calculated value based on the actual measurement. The signal converter calculates this value depending on the compensation methods (pH and temperature compensation) chosen for the calibration. Do not change the compensation method in the time between the measurement of the "stored value" and the input of the reference value. Otherwise this could result in a wrong calibration.

Completing the calibration procedure

- As soon as the laboratory value has been determined, go again into the calibration menu and submenu **reference** by using ▼ or ▲ and then press **>**.
- Enter the laboratory value using ▼ or ▲ and press ↵.

➲ The signal converter now matches the "stored value" to the laboratory value and makes a re-calibration. The slope appears on the display and it is stored in the calibration logbook (this helps to compare the slope values over the time when re-calibrating).

- Assure that the slope of a new sensor is 50...150 mg/nA, otherwise the sensor has a malfunction. Press ↵ if the slope is okay.

➲ The signal converter now asks **store value?**

- Using ▼ or ▲ choose **yes** to store the calibration values or **no** to discard them.
- Press ↵ to confirm.
- Press ↵ several times until the questions appears if the configuration should be stored.
- Using ▼ or ▲ choose **yes** to store the configuration or **no** to discard it.

➲ You have completed the sensor calibration.

INFORMATION!
If an error occurs during the calibration procedure, the signal converter displays an error message. Possible causes for an error:

- *Slope too flat.*
- *Sensor too old.*
- *Wrong electrical connection.*

Step 5: switching back to measurement

- Deactivate the function "manual hold" again.

5.3.5 Calibration log

INFORMATION!
In order to show the history of the calibrations, the converter has a calibration logbook function. Up to 64 entries of the calibration history are stored including date and time.

Accessing the calibtration log

- Press **>** for more than 2.5 seconds, then release the button. You are on the main menu level. In the upper line of the display "A" appears, beneath the main menu **quick setup** is highlighted.
- Press ▼ or ▲ until the main menu **test** is highlighted.

MAIN MENU
A quick setup
> B test
C setup
D service

Press **>** to enter the chosen menu.

You are on the first submenu level. In the upper line of the display "test" and "B1" appears, beneath the submenu **sim.process input A** is highlighted.

Press ▲ or ▼ until the submenu **logbooks** is highlighted.

Press **>** to enter the chosen menu.

You are on the second submenu level. In the upper line of the display "logbooks" and "B1" appears, beneath the submenu **status log** is highlighted.

Press ▼ or ▲ until the submenu **calibration log** is highlighted.

Press **>** to enter the chosen menu.

- You are on the data level and you see the calibration history. With the help of ▼ or ▲ you can scroll through the different entries.
- If you want to return to the measuring mode press ↵ several times until you reach this mode.

5.4 Troubleshooting

Problem	Possible cause	Remedy
The measurement is inaccurate.	This is probably due to coatings on the electrodes.	The sensor needs to be cleaned. Use automatic sensor cleaning or, if this does not help, clean the electrodes with a soft cloth. For further information refer to *Cleaning* on page 36.
The sensor slope appears to be too small.		

6.1 Maintenance

6.1.1 Cleaning

The sensor can be equipped with the patented automatic sensor cleaning (ASR, patent Dr. A. Kuntze). An electrochemical process causes outgassing on the measuring electrodes, which can dissolve even tough coatings such as lime deposits or grease. The ASR considerably increases the maintenance interval of the sensor. This way, the sensor can stay in the measuring medium until it reaches the end of its lifetime.

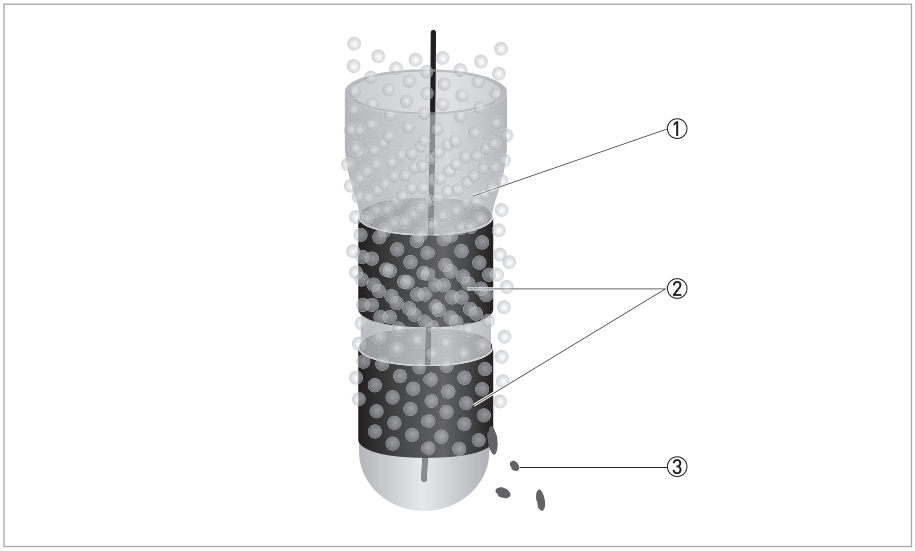

Figure 6-1: Automatic sensor cleaning ASR

① Ceramic diaphragm
② Gold electrodes
③ Dirt deposits removed by ASR

Configuring automatic sensor cleaning

- Choose **setup** > **process input A** > **cleaning** > **cleaning 24 h periode**.
- Select a cleaning period of **24 hours** (once a day), **12 hours**, or **8 hours** (three times a day). To deactivate automatic sensor cleaning, select **off**.

➲ The cleaning period starts at the time of configuration.

- If required, you can postpone the start time of the cleaning procedure (**setup** > **process input A** > **cleaning** > **start time**) and adjust the hold time after each cleaning procedure (**setup** > **process input A** > **cleaning** > **hold time [s]**). During the hold time, the sensor value is frozen by the signal converter.
- The cleaning procedure may also be started manually anytime by choosing **setup** > **process input A** > **cleaning** > **clean**.

INFORMATION!
*Example: It was 3.00 pm when you configured automatic sensor cleaning with **24 hours** as cleaning period. As a result, the sensor will be cleaned once a day at 3.00 pm.*
*If you have specified a value in the **start time** submenu, for example "5", the cleaning time will be postponed by 5 hours. The senor now is cleaned once a day at 8.00 pm.*

If necessary, the gold electrodes can be cleaned with a soft cloth. Mechanical cleaning should not be performed too often since this will disturb the polarisation layer of the sensor.

6.1.2 Aging and re-calibration



CAUTION!
The life time expectation of the sensor depends on the application. Normally, the life time lies between 2 and 4 years.
In applications with high reliability requirements, e.g. drinking water, we recommend replacing the sensor once a year.

The sensor has to be re-calibrated in regular intervals due to aging effects of the reference electrode.For detailed information refer to *Calibration* on page 25. We recommend re-calibrating the sensor every 3 months.

When the sensor becomes too old to provide reliable measurements, the signal converter displays an error message after the calibration procedure. In this case, the sensor has to be exchanged.

Aging effects

Change of slope due to aging of the reference electrode: An optimal slope value is 100 mg/nA (new sensor). When the sensor ages, this value changes. When the slope exceeds or falls below certain limits, an error message is displayed and the sensor has to be exchanged.
The slope of the sensor and the sensor limits are displayed after each calibration procedure.



INFORMATION!
It is helpful to note the sensor slope after each calibration procedure. This way you can compare the slope over the sensor lifetime.

6.2 Spare parts availability

The manufacturer adheres to the basic principle that functionally adequate spare parts for each device or each important accessory part will be kept available for a period of 3 years after delivery of the last production run for the device.

This regulation only applies to spare parts which are subject to wear and tear under normal operating conditions.

6.3 Availability of services

The manufacturer offers a range of services to support the customer after expiration of the warranty. These include repair, maintenance, technical support and training.



INFORMATION!
For more precise information, please contact your local representative.

6.4 Returning the device to the manufacturer

6.4.1 General information

This device has been carefully manufactured and tested. If installed and operated in accordance with these operating instructions, it will rarely present any problems.



CAUTION!
Should you nevertheless need to return a device for inspection or repair, please pay strict attention to the following points:

- *Due to statutory regulations on environmental protection and safeguarding the health and safety of our personnel, manufacturer may only handle, test and repair returned devices that have been in contact with products without risk to personnel and environment.*
- *This means that the manufacturer can only service this device if it is accompanied by the following certificate (see next section) confirming that the device is safe to handle.*



CAUTION!
If the device has been operated with toxic, caustic, flammable or water-endangering products, you are kindly requested:

- *to check and ensure, if necessary by rinsing or neutralizing, that all cavities are free from such dangerous substances,*
- *to enclose a certificate with the device confirming that is safe to handle and stating the product used.*

6.4.2 Form (for copying) to accompany a returned device

Company:		Address:
Department:		Name:
Tel. no.:		Fax no.:
Manufacturer's order no. or serial no.:		
The device has been operated with the following medium:		
This medium is:	☐	water-hazardous
	☐	toxic
	☐	caustic
	☐	flammable
	☐	We checked that all cavities in the device are free from such substances.
	☐	We have flushed out and neutralized all cavities in the device.
We hereby confirm that there is no risk to persons or the environment through any residual media contained in the device when it is returned.		
Date:		Signature:
Stamp:		

6.5 Disposal



CAUTION!
Disposal must be carried out in accordance with legislation applicable in your country.

7.1 Measuring principle

Free chlorine measurement

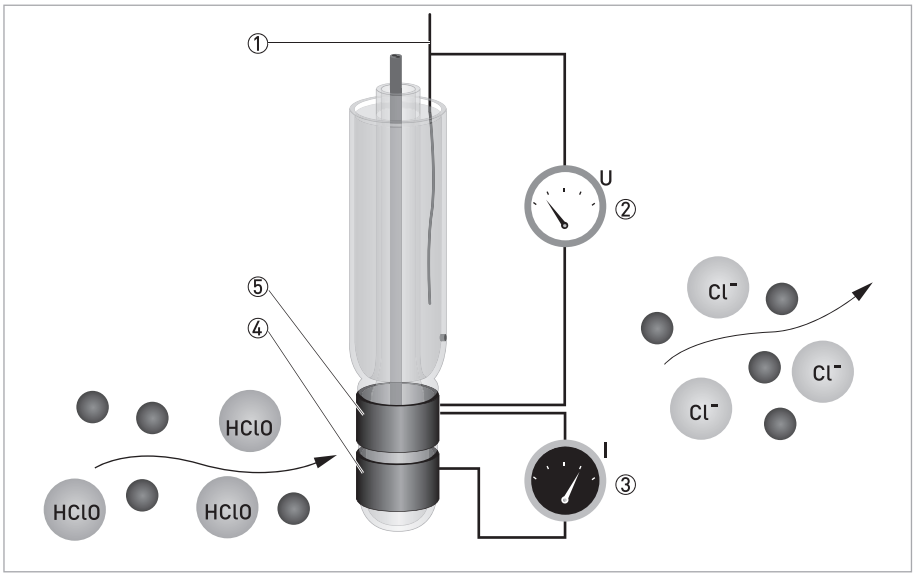

Figure 7-1: Free chlorine measurement

① Reference electrode
② Voltage measurement
③ Current needed to maintain the constant potential
④ Counter electrode
⑤ Measuring electrode

The sensor has three electrodes: a measuring electrode (gold), a counter electrode (gold), and a reference electrode (Ag/AgCl). A precise potential is built up between the measuring and the counter electrode. The measuring electrode starts polarizing, i.e. negative charges collect close to the measuring electrode. After polarization the electrical current decreases to 0 mA as long as the polarising layer is not changed.

Free chlorine molecules that hit the surface of the measuring electrode take a defined portion of the charge with them, changing the potential of the measuring potential. The signal converter constantly measures the potential between measuring and reference electrode and immediately readjusts the potential as soon as it begins to change. The current needed to maintain a constant potential is directly correlated to the free chlorine concentration in the measuring medium.

Free chlorine (chlorine dissolved in water) changes its chemical composition depending on the pH value of the water. The pH value has consequences for the disinfection strength: with increasing pH the disinfection strength decreases.

- below pH3: Chlorine gas Cl_2
- between pH3 and pH8: Hypochlorus acid HOCl
- above pH8: Hypochlorite ClO

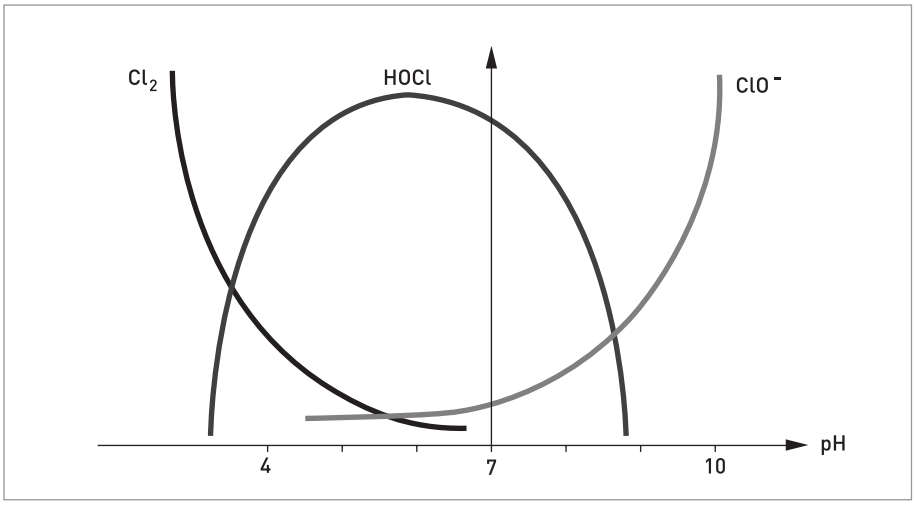

Figure 7-2: Composition of free chlorine depending on pH value

In order to obtain a reliable free chlorine measurement you should either control or compensate the pH value of the measuring medium. Because the pH measurement is temperature dependent, it also makes sense to measure the temperature. For further information on installing a pH sensor with temperature measurement, refer to the pH sensor manual.

Chlorine dioxide measurement

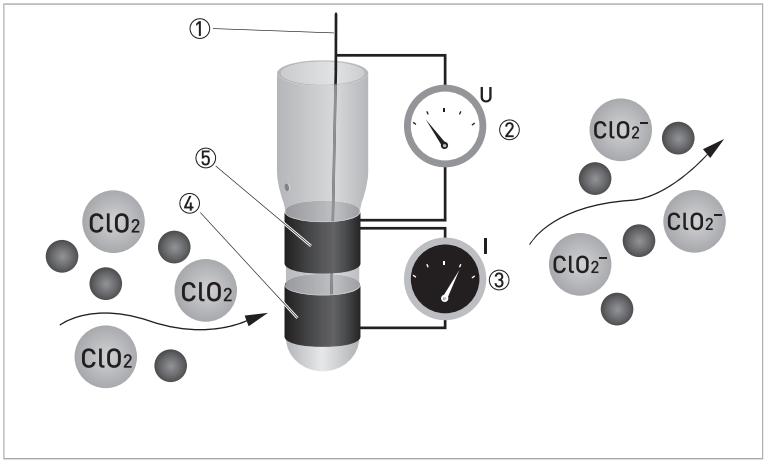

Figure 7-3: Chlorine dioxide measurement

① Reference electrode
② Voltage measurement
③ Current needed to maintain the constant potential
④ Counter electrode
⑤ Measuring electrode

Chlorine dioxide measurement

Chlorine dioxide (ClO_2) is an instable, non-storable, toxic gas with a characteristic scent. The molecule consists of one chlorine atom and two oxygen atoms – represented in the chemical formula ClO_2. It is very reactive. To avoid the risk of spontaneous explosions of gaseous chlorine dioxide or concentrated solutions, it is generally handled in dilution with low concentrations. ClO_2 is soluble in water, but tends to evaporate quickly. Typically it is prepared on site, for example from hydrochloric acid and sodium chlorite. The procedure provides solutions with approx. 2 g/l ClO_2 that can be safely handled and stored for several days.

The disinfection effect of ClO_2 is due to the transfer of oxygen instead of chlorine, so that no chlorinated byproducts are formed. ClO_2 is used as disinfectant against biofilm, bacteria, spores, and viruses. Today it is believed that the molecule´s unpaired electron is transferred to the DNA of the microorganism which cracks and causes cell necrosis. ClO_2 has a long-term effect of several days. In contrast to chlorine, the disinfection strength of ClO_2 does not depend on pH, and neither does the measurement show a pH influence in the range of pH 6 to pH 9.

ClO_2 is measured potentiostatic with measuring and counter electrodes of pure gold and an Ag/AgCl reference. The measurement shows good selectivity towards ClO_2. A precise potential is applied to the measuring electrode, leading to an accumulation of negative charges on the metal surface. ClO_2 molecules that hit the surface take a defined portion of the charge with them. The controller measures the potential between measuring and reference electrode and readjusts the charge on the electrode surface. The current necessary to maintain a constant charge is a direct measure for the concentration of chlorine dioxide.

Ozon measurement

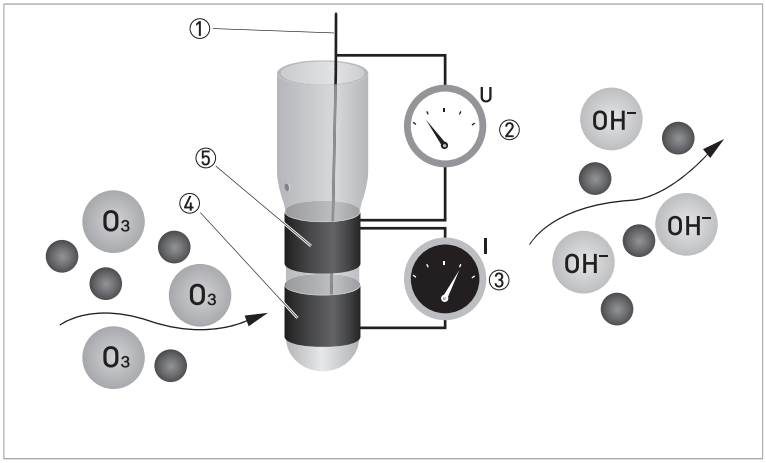

Figure 7-4: Ozon measurement

① Reference electrode
② Voltage measurement
③ Current needed to maintain the constant potential
④ Counter electrode
⑤ Measuring electrode

Ozone measurement

Ozone (O_3) is an instable molecule of three oxygen atoms and a very strong oxidizing agent. At room temperature it is a gas. Due to its instability it cannot be stored in pressurized cylinders and has to be prepared on site.

O_3 is an eco-friendly disinfectant. However, its great disinfection strength can only be used to good advantage in suitable reactors with a sojourn time of at least 3 minutes. The long-term effect of O_3 is only a few minutes.

O_3 is measured potentiostatic with measuring and counter electrodes of pure gold and an Ag/AgCl reference. The measurement shows good selectivity towards ozone. A precise potential is applied to the measuring electrode, leading to an accumulation of negative charges on the metal surface. O_3 molecules that hit the surface take a defined portion of the charge with them. The controller measures the potential between measuring and reference electrode and readjusts the charge on the electrode surface. The current necessary to maintain a constant charge is a direct measure for the concentration of O_3. The sensor design with 3 electrodes in a single rod enables us to use our patented cleaning procedure ASR (patent Dr. A. Kuntze) providing you with a low-maintenance measuring setup.

7.2 Technical data for the system

OPTISYS CL 1100	Cl_2	ClO_2	O_3

Installation conditions

Installation	Wall installation with sample feed
Housing protection class	IP65, Nema 4
Sample flow connections	Tube connection DN 6/8
Drill Hole	10mm / 0.39"

INFORMATION!
For further information about the technical data please consider the MAC 100 converter manual.

7.3 Technical data for the sensor

INFORMATION!

- *The following data is provided for general applications. If you require data that is more relevant to your specific application, please contact us or your local representative.*
- *Additional information (certificates, special tools, software,...) and complete product documentation can be downloaded free of charge from the website (Download Center).*

INFORMATION!

For further information about the technical data please consider the MAC 100 converter manual.

OPTISENS CL 1100	Cl_2	ClO_2	O_3

Measuring system

Measuring principle	Potentiostatic with double gold electrodes		
Application range	Continuous measurement of free chlorine in water applications.	Continuous measurement of chlorine dioxide in water applications.	Continuous measurement of ozon in water applications.
Measuring range	Cl_2: 0...5 mg/l	ClO_2: 0...5 mg/l	O_3: 0...5 mg/l

Design

Construction	Glass electrode
Shaft diameter	12 mm / 0.47"
Lenght	120 mm / 4.72"
Process connection	PG 13.5
Sensor cap	M12

Measuring accuracy

Reference conditions	Medium: water
	Temperature: 20°C / 68°F
	Pressure: 1 bar / 14.5 psi (absolute)
Maximum measuring error	≤ 2% full scale
	Temperature: 1.0% full scale
Repeatability	0.2% full scale
Resolution	0.1/0.01 mg/l
Long-term stability	24 hours: tested within accuracy definition
Temperature drift	Tested within accuracy definition
Cable length variation	Tested within accuracy definition

Operating conditions

Temperature operating	-5…+70°C / +23…+158°F	
Max. operating pressure	6 bar / 87 psi	
Min. flow rate	> 30 l/h (7.93 gal/H)	
Min. conductivity	> 150 µS/cm (with ASR: > 200 µS/cm	> 150 µS/cm

Materials

Electrode shaft	Glass
Measuring electrodes	Gold
Reference electrode	Ag / Ag / Tepox gel
Diaphragm	Ceramics
Gasket	EPDM

Electrical connection

Connector	M12
Cable	Cable CL-W 1100
Cable design	Shielded cable with M12 connector and core end sleeves
Length	5 m / 16.4 ft or 10 m / 32.8 ft

7.4 Dimensions and weights for the system

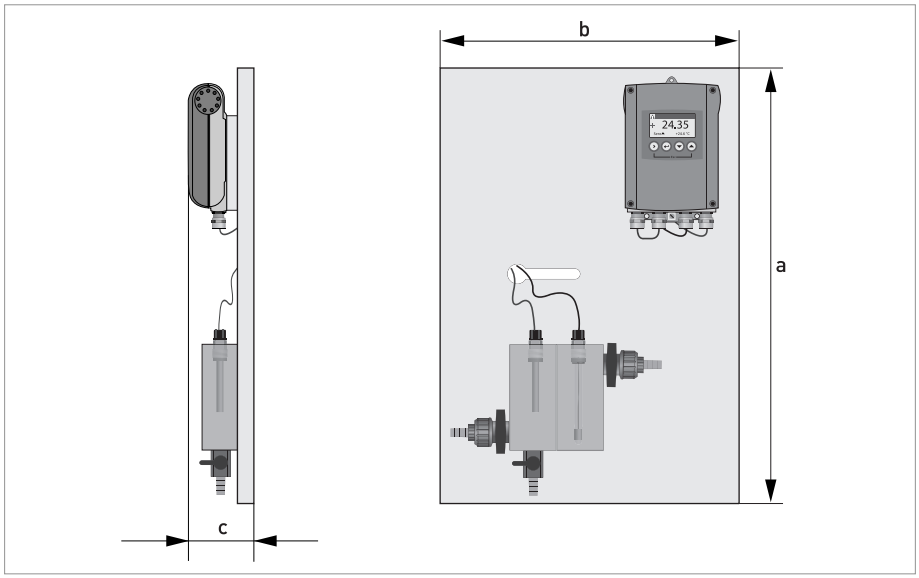

	Dimensions	
	[mm]	[inch]
a	700	27.56
b	400	15.75
c	105.2	4.14

Weight: 5,15 Kg (11.35 lb)

INFORMATION!
For further information about the technical data please consider the MAC 100 converter manual.

7.5 Dimensions for the sensor

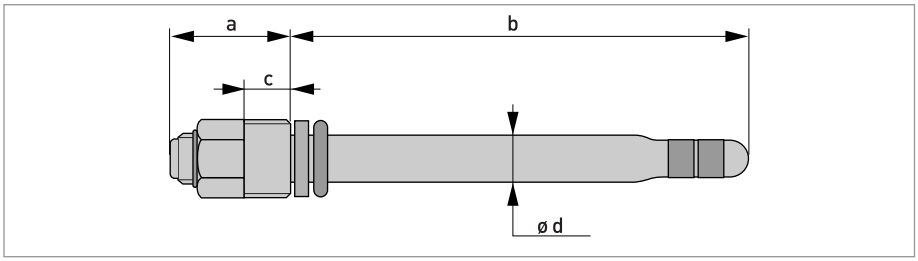

Figure 7-5: Dimensions of OPTISENS CL 1100

	Dimensions	
	[mm]	[inch]
a	31	1.2
b	120	4.7
c	10	0.4
d	Ø12	Ø0.5



KROHNE product overview

- Electromagnetic flowmeters
- Variable area flowmeters
- Ultrasonic flowmeters
- Mass flowmeters
- Vortex flowmeters
- Flow controllers
- Level meters
- Temperature meters
- Pressure meters
- Analysis products
- Measuring systems for the oil and gas industry
- Measuring systems for sea-going tankers

Head Office KROHNE Messtechnik GmbH
Ludwig-Krohne-Str. 5
D-47058 Duisburg (Germany)
Tel.:+49 (0)203 301 0
Fax:+49 (0)203 301 10389
info@krohne.de

The current list of all KROHNE contacts and addresses can be found at:
www.krohne.com

KROHNE

© KROHNE 01/2012 - MA OPTISYS CL 1100 R01 en - Subject to change without notice.