KITZ

Graphite and Metal Seated Steel Ball Valves

Service Temperature: up to 500˚C

Uncoditional Firesafe Provision



■ Metal seated ball valves rated JIS 10K/20K and ASME Class 150/300 for highly abrasive control and throttling service.

■ Hard graphite seated ball valves rated JIS 10K/20K and ASME Class 150/300 for low abrasive fluid control service.

KITZ CORPORATION

KITZ Graphite and Metal Seated Ball Valves

Production Range

Trim	Class	Shell Materials	Ball Seat	Design	Size in.	½	¾	1	1½	2	2½	3	4	6	8	10	12	14
					Product Code / mm	15	20	25	40	50	65	80	100	150	200	250	300	350
3H	150	Stainless Steel	Carbon+Stainless Steel	Floating	150UTB3H	●	●	●	●	●	●	●	●	■	■			
					150UTB3HM	●	●	●	●	●	●	●	●	■	■			
		Carbon Steel			150SCTB3H	●	●	●	●	●	●	●	●	■	■			
	JIS 10K	Stainless Steel			10UTB3H	●	●	●	●	●	●	●	●	■	■			
					10UTB3HM	●	●	●	●	●	●	●	●	■	■			
		Carbon Steel			10SCTB3H	●	●	●	●	●	●	●	●	■	■			
	300	Stainless Steel			300UTB3H	●	●	●	●	●	●	●	■	■	■			
					3000UTB3HM	●	●	●	●	●	●	●	■	■	■			
		Carbon Steel			3000SCTB3H	●	●	●	●	●	●	●	■	■	■			
	JIS 20K	Stainless Steel			20UTB3H	●	●	●	●	●	●	●	■	■	■			
					20UTB3HM	●	●	●	●	●	●	●	■	■	■			
		Carbon Steel			20SCTB3H	●	●	●	●	●	●	●	■	■	■			
	600	Stainless Steel			600UTB3H	●	●	●	●									
					6000UTB3HM	●	●	●	●									
		Carbon Steel			6000SCTB3H	●	●	●	●									
5H	150	Stainless Steel	A276 Type 316+Ni-Cr Alloy	Floating	150UTB5H	●	●	●	●	●	●	●	●	■	■			
					150UTB5HM	●	●	●	●	●	●	●	●	■	■			
		Carbon Steel			150SCTB5H	●	●	●	●	●	●	●	●	■	■			
	JIS 10K	Stainless Steel			10UTB5H	●	●	●	●	●	●	●	●	■	■			
					10UTB5HM	●	●	●	●	●	●	●	●	■	■			
		Carbon Steel			10SCTB5H	●	●	●	●	●	●	●	●	■	■			
	300	Stainless Steel			300UTB5H	●	●	●	●	●	●	●	■	■	■			
					300UTB5HM	●	●	●	●	●	●	●	■	■	■			
		Carbon Steel			300SCTB5H	●	●	●	●	●	●	●	■	■	■			
	JIS 20K	Stainless Steel			20UTB5H	●	●	●	●	●	●	●	■	■	■			
					20UTB5HM	●	●	●	●	●	●	●	■	■	■			
		Carbon Steel			20SCTB5H	●	●	●	●	●	●	●	■	■	■			
6H	150	Stainless Steel	A276 Type 316+Ni-Cr Alloy	Floating	150UTB6H	●	●	●	●	●	●	●	●	■	■			
					150UTB6HM	●	●	●	●	●	●	●	●	■	■			
		Carbon Steel			150SCTB6H	●	●	●	●	●	●	●	●	■	■			
		Stainless Steel	Type 304+SFNi	Trunnion Mounted	150UTC6H											■	■	■
					150UTC6HM											■	■	■
		Carbon Steel			150SCTC6H											■	■	■
	JIS 10K	Stainless Steel	A276 Type 316+Ni-Cr Alloy	Floating	10UTB6H	●	●	●	●	●	●	●	●	■	■			
					10UTB6HM	●	●	●	●	●	●	●	●	■	■			
		Carbon Steel			10SCTB6H	●	●	●	●	●	●	●	●	■	■			
	300	Stainless Steel			300UTB6H	●	●	●	●	●	●	●	■	■	■			
					300UTB6HM	●	●	●	●	●	●	●	■	■	■			
		Carbon Steel			300SCTB6H	●	●	●	●	●	●	●	■	■	■			
		Stainless Steel	Type 304+SFNi or Type 316+SFNi	Trunnion Mounted	300UTC6H					●		●	■	■	■	■	■	■
					300UTC6HM					●		●	■	■	■	■	■	■
		Carbon Steel			300SCTC6H					●		●	■	■	■	■	■	■
	JIS 20K	Stainless Steel	A276 Type 316+Ni-Cr Alloy	Floating	20UTB6H	●	●	●	●	●	●	●	■	■	■			
					20UTB6HM	●	●	●	●	●	●	●	■	■	■			
		Carbon Steel			20SCTB6H	●	●	●	●	●	●	●	■	■	■			
	600	Stainless Steel			600UTB6H	●	●	●	●									
					600UTB6HM	●	●	●	●									
		Carbon Steel			600SCTB6H	●	●	●	●									
		Stainless Steel	Type 304+SFNi or Type 316+SFNi	Trunnion Mounted	600UTC6H					●		●	■	■	■	■	■	■
					600UTC6HM					●		●	■	■	■	■	■	■
		Carbon Steel			600SCTC6H					●		●	■	■	■	■	■	■

KITZ Product Coding

Example: Gear Operated ASME Class 150 Metal Seated Ball Valve, CF8M Shell Materials, Trim Symbol 6H

G- 150 U T B 6H M

1 2 3 4 5 6 7

❶ Valve operational measure
- None ····· Lever handle
- G ····· Worm gear
- B ····· KITZ Type B double action pneumatic actuator
- BS ····· KITZ Type BS spring retuen pneumatic actuator
- BSW ····· KITZ Type BSW spring retuen pneumatic actuator

❷ Valve pressure class
❸ Shell materials
❹ Symbol for ball valve
❺ Valve design
❻ Trim symbol
❼ Stainless steel shell material

KITZ Graphite and Metal Seated Ball Valves

Design Features

Split Body, Side Entry, Full Bore Design

This is an illustrated cross-section of a typical KITZ high performance ball valve to exhibit the basic design concept. The actual design of a valve may be slightly different from this illustration, depending on its size and pressure class.

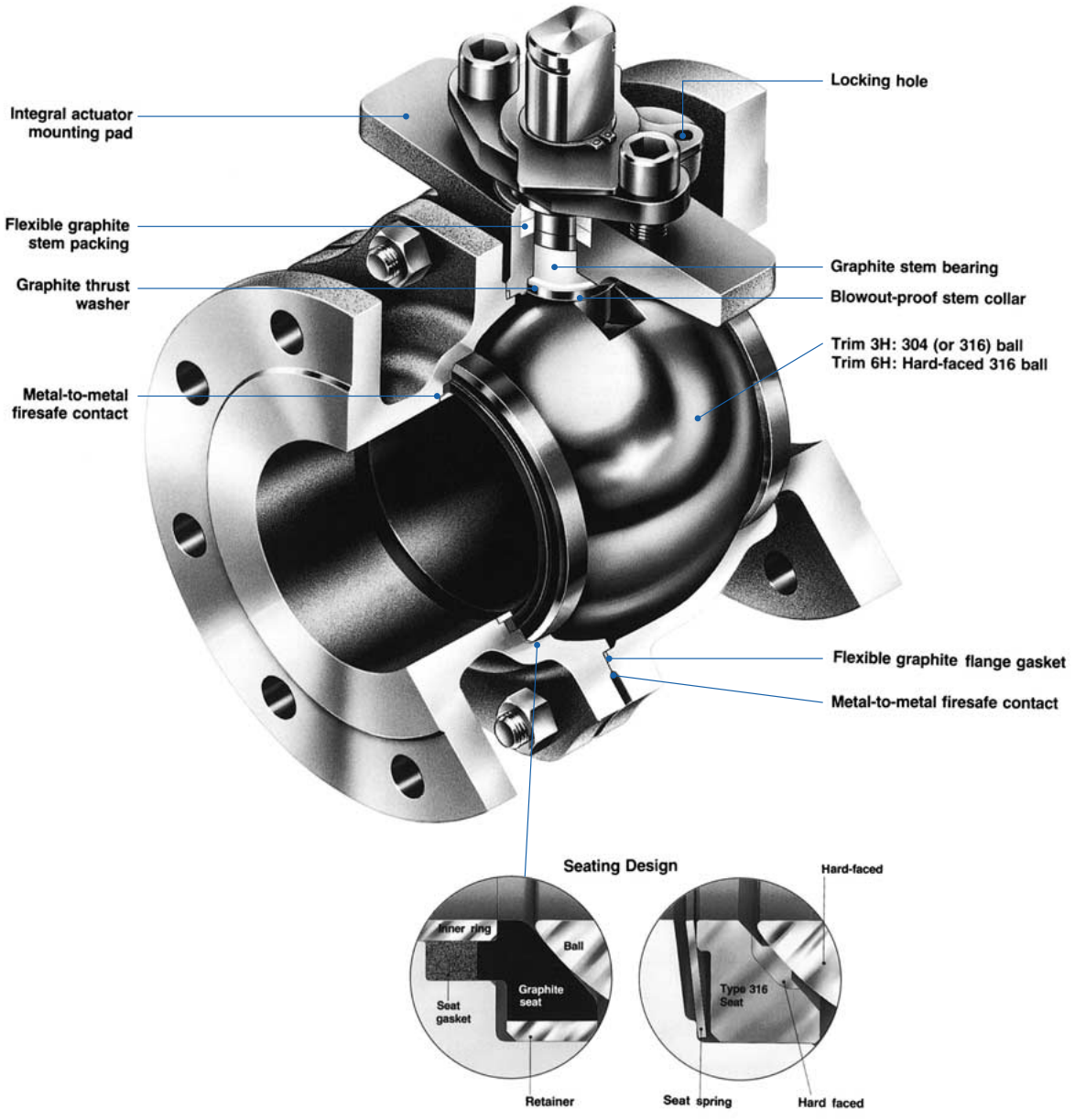

Design Standards

Valve body design	Split body, side entry, RF-flanged, full port with floating ball deaign
Wall thickness	ASME B16.34 Class 150/300
F-F dimensions	ASME B16.10 Class 150/300
End connection	ASME B16.5 Class 150/300 or RF-flanged to JIS B2238 10K/20K
P-T rating	ASME B16.34 Class 150/300 or JIS B2238 10K/20K

Technical Data

1. Choice of trim for heated abrasive service

Metal seated ball valves are guaranteed for a maximum service temperature of 300˚C (527˚F)(Trim symbol 5H) and 500˚C (932˚F)(Trim symbol 6H). For hard graphite seated ball valves, a maximum service temperature of 500˚C (932˚F) is also guaranteed (Trim symbol 3H). Heat resistant sealing and trim materials qualify these valves for heated abrasive service which cannot be properly handled by conventional soft seated ball valves due to the limited heat resistant characteristics and mechanical properties of their soft seats.

*Temperature is limited to 400°C (752°F) for trunnion mounted ball valves with trim 6H.

2. Unconditional firesafe provision

While metal or hard graphite seats are extremely heat resistant, other sealing components such as gland packings and flange gaskets are made of flexible graphite, another heat resistant material, so that no part of the valve will be affected by extraordinarily heated environments. Also the provision of anti-static device is not required because of inter-component electric conductivity.

3. Maintenance ease

Split body construction of the valve body provides the convenience of easy maintenance, a critical requirement for handling slurries and other viscous fluids.

4. Valve automation

Quarter-turn valve drive mechanism makes mounting of valve automation measures such as electric and pneumatic actuators technically easier. KITZ ball valves employ integral actuator mounting pads for easy, safe and assured on-the-spot actuator mounting without disassembly of valve glands.

Note: Customers are requested to prepare mounting brackets and connectors chosen for their valve actuation as illustrated below:

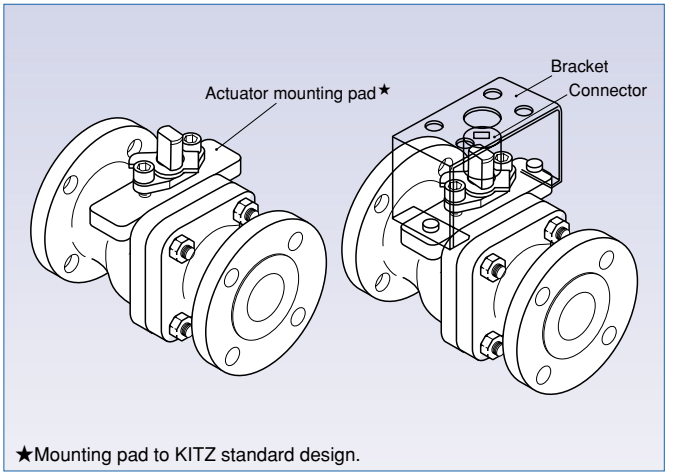

★Mounting pad to KITZ standard design.

5. High flow efficiency

Full Port design provides maximized and Linearized flow characteristics with minimized pressure loss while the line flow travels through the valve bore. this is a necessary design requirement particularly for trouble-free service of slurries and other viscous fluids.

6. Metal seated ball valves (Trim 5H/6H)

- Rigid construction with fully metallic contact between the ball and seats, and high durability of trim materials make KITZ metal seated ball valves ideally suited to highly abrasive services handling slurries and other viscous fluids.

- Trim materials

Design		Floating Ball Valve			Trunnion Mounted Ball Valve
Parts	Temp.	500°C	300°C	500°C	400°C
		932°F	572°F	932°F	752°F
	Trim symbol	3H	5H	6H	6H
Ball		ASTM A276 Type 304 or A351 Gr. CF8	Cr plated +ASTM A276 Type 316 or A351 Gr. CF8M + Cr Plated	ASTM A276 Type 316 or A351 Gr. CF8M + Ni-Cr Alloy	ASTM A276 Type 304 + SFNi*3
Seat		JIS SUS 329J1*1 +Carbon	ASTM A276 Type 316 + Ni-Cr Alloy	ASTM A276 Type 316 + Ni-Cr Alloy	ASTM A276 Type 316 + Ni-Cr Alloy
Stem		JIS SUS 630*2	JIS SUS 630*2	JIS SUS 630*2	JIS SUS 630*2

*1 Equivalent to AISI TYPE 329
*2 Equivalent to ASTM A546 Type 630
*3 Ni-Cr Alloy Thermal spraying

- Durable metal seat design and material also provides fully guaranteed throttling service performance, which makes KITZ metal seated ball valves function as a reliable control valve.

Caution:
- Use a gear operator or valve actuator to fix the valve position when used for throttling service.
- Mount the valve with the body cap to the downstream side at all times, since the valve is designed for uni-directional pressurization, as indicated by the arrow mark on the body flange.
- Ball seats are not interchangeable with any other KITZ ball valves seats.

7. Hard graphite seated ball valves (Trim 3H)

- Bi-directional pressurizing direction.
- Recommended for low abrasion service.

Caution:
- Not recommended for throttling service.
- Not recommended for high abrasion service.
- Ball seats are not interchangeable with any other KITZ ball valve seats.
- Leakage may increace when the valves are excessively exposed to oxidized service at higher temperature than 450˚C.

Technical Data

Pressure Test

● Metal seated floating ball valves (Trim 6H/5H)

Maximum allowable seat leakage*:
Air: ANSI/FCI 70-2 Class VI

Hydrostatic test pressure

Unit:MPa

Class	ASME 150	ASME 300	JIS 10K	JIS 20K
Shell test	S/S*:2.93 C/S*:3.10	S/S*:7.65 C/S*:7.85	2.06	5.00
Seat test	0.35 Air			

● Metal seated Trunnion mounted ball valves (Trim 6H)

Maximum allowable seat leakage:
ANSI/FCI 70-2 Class V

Hydrostatic test pressure

Unit:MPa

Class	150	300	600
Shell test	S/S*:2.93	S/S*:7.58	S/S*:15.00
	C/S*:3.10	C/S*:7.76	C/S*:15.35
Seat test	0.35 Air		

● Hard graphite seated floating ball valves (Trim 3H)

Maximum allowable seat leakage*:
ANSI/FCI 70-2 Class VI

Hydrostatic test pressure

Unit:MPa

Class	ASME 150	ASME 300	JIS 10K	JIS 20K
Shell test	S/S*:2.94 C/S*:3.14	S/S*:7.65 C/S*:7.85	2.06	5.00
Seat test	0.35 Air			

*S/S: Stainless steel C/S: Carbon steel
∗Contact KITZ in case of oil-free requirement.

Pressure-Temperature Rating

● Metal seated floating ball valves: Trim 6H

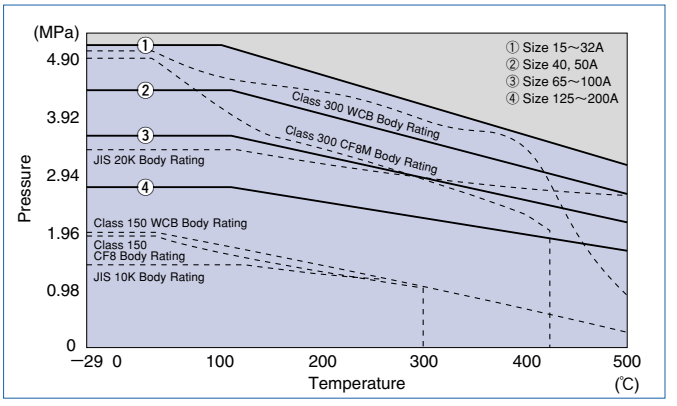

● Metal seated floating ball valves: Trim 5H

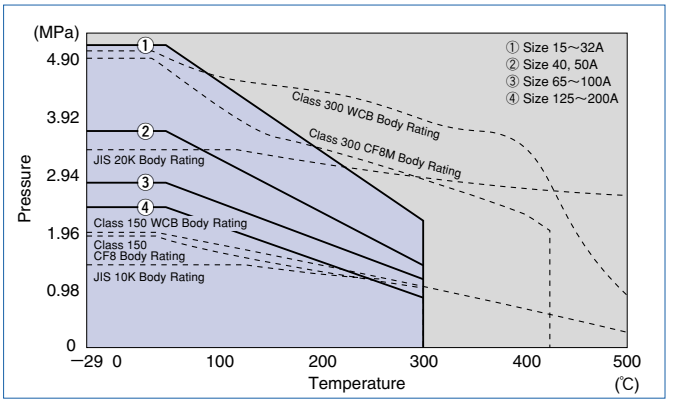

● Hard graphite seated floating ball valves: Trim 3H

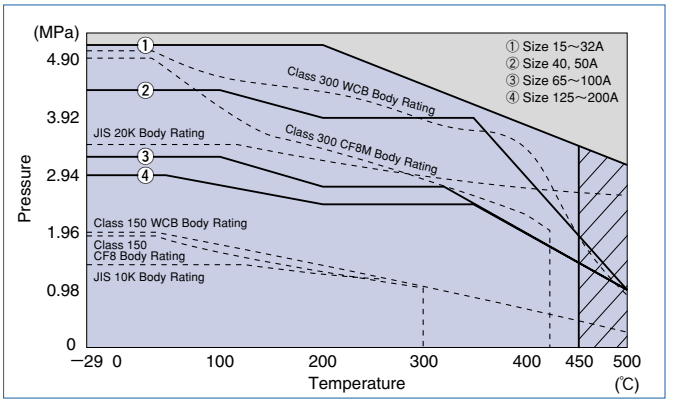

● Metal seated trunnion mounted ball valves: Trim 6H

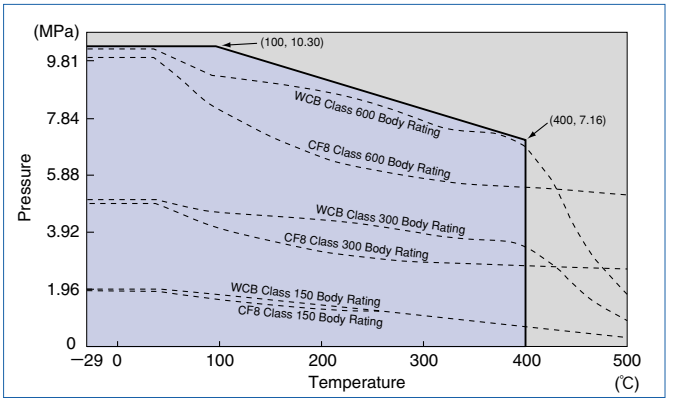

Note: **3H** (1) Leakage may increase when the valves are excessively exposed to oxidized service at higher temperature than 450℃.
Note: **3H/6H/5H** (1) Serviceable temperature terminates at 300℃ for JIS 10K and at 425℃ for JIS 20K.

●Hard graphite seated ball valve（Trim 3H）

150／10UTB3H（M）

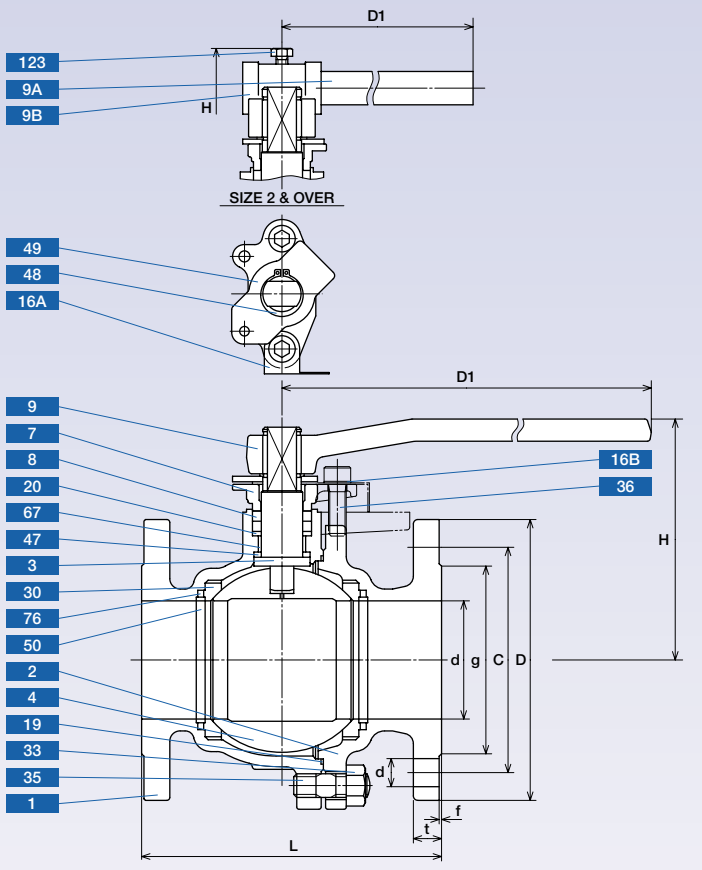

Construction and materials

No.	Parts	Specifications
		150UTB3H
1	Body	A351 Gr. CF8
2	Body cap	A351 Gr. CF8
3	Stem	JIS SUS630*
4	Ball	A351 Gr. CF8 or A276 Type 304
7	Gland	A351 Gr. CF8
8	Gland packing	Flexible graphite
9	Handle	Ductile iron
9A	Handle bar	Carbon steel (size 2 & over)
9B	Handle head	Ductile Iron (size 2 & over)
16A	Name plate	Aluminum
16B	Washer	Carbon steel
19	Gasket	Flexible graphite
20	Packing washer	A276 Type 316
30	Ball seat	Carbon + Stainless steel
33	Cup nut	A194 Gr. 8M
35	Cap bolt	A193 Gr. B8
36	Gland bolt	A193 Gr. B8
47	Thrust washer	Carbon
48	Snap ring	A276 Type 304
49	Stopper	A276 Type 304
67	Stem bearing	Carbon
123	Handle bolt	Carbon steel (size 2 & over)
150	Inner ring	Stainless steel
176	Seat gasket	Flexible graphite

* Equivalent to ASTM A564 TYPE 630

Dimensions:150UTB3H（M）

Unit: mm

Nominal size		d	H	D1	L	End flange							
						D	Bolt hole			Bolt size	g	t	f
in.	mm						C	NO.	h				
1/2	15	15	102	130	108	89	60.5	4	16	1/2	35	11.2	1.6
3/4	20	20	105	130	117	98	70.0	4	16	1/2	43	11.2	1.6
1	25	25	124	160	127	108	79.5	4	16	1/2	51	11.2	1.6
1 1/2	40	40	115	230	165	127	98.5	4	16	1/2	73	14.3	1.6
2	50	50	141	300	178	152	120.5	4	19	5/8	92	15.9	1.6
2 1/2	65	65	188	600	190	178	139.5	4	19	5/8	105	17.5	1.6
3	80	80	197	600	203	190	152.5	4	19	5/8	127	19.1	1.6
4	100	100	242	1000	229	229	190.5	8	19	5/8	157	23.9	1.6

Dimensions:10UTB3H（M）

Unit: mm

Nominal size		d	H	D1	L	End flange							
						D	Bolt hole			Bolt size	g	t	f
mm	in.						C	NO.	h				
15	1/2	15	102	130	110	95	70	4	15	M12	51	12	1
20	3/4	20	105	130	120	100	75	4	15	M12	56	14	1
25	1	25	124	160	130	125	90	4	19	M16	67	14	1
32	1 1/4	32	130	160	140	135	100	4	19	M16	76	16	2
40	1 1/2	40	115	230	165	140	105	4	19	M16	81	16	2
50	2	50	141	300	180	155	120	4	19	M16	96	16	2
65	2 1/2	65	188	600	190	175	140	4	19	M16	116	18	2
80	3	80	197	600	200	185	150	8	19	M16	126	18	2
100	4	100	242	1000	230	210	175	8	19	M16	151	18	2

●Hard graphite seated ball valve（Trim 3H）

G-150／10UTB3H（M）

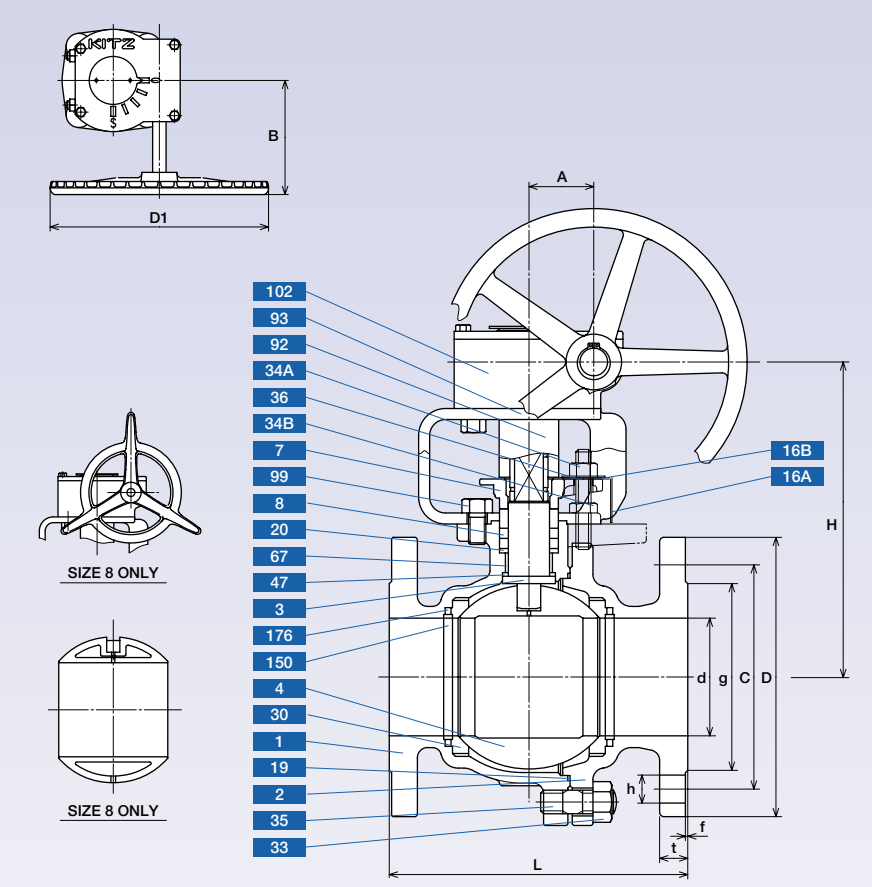

Construction and materials

No.	Parts	Specifications
		G-150UTB3H
1	Body	A351 Gr. CF8
2	Body cap	A351 Gr. CF8
3	Stem	JIS SUS630*
4	Ball	A351 Gr. CF8 or A276 Type 304
7	Gland	A351 Gr. CF8
8	Gland packing	Flexible graphite
16A	Name plate	Aluminum
16B	Washer	Flexible graphite
19	Gasket	Flexible graphite
20	Packing washer	A276 Type 316
30	Ball seat	Carbon + Stainless steel
33	Cup nut	A194 Gr. 8
34A	Grand nut	A194 Gr. 8
34B	Nut	A194 Gr. 8
35	Cap bolt	A193 Gr. B8
36	Gland bolt	A193 Gr. B8
47	Thrust washer	Carbon
67	Stem bearing	Carbon
92	Connector	Carbon steel
93	Bracket	Ductile iron
99	Bolt	Carbon steel
102	Gear unit	
150	Inner ring	Stainless steel
176	Seat gasket	Flexible graphite

* Equivalent to ASTM A564 TYPE 630

Dimensions:G-150UTB3H（M）

Unit: mm

Nominal size		d	H	D1	L	End flange								A	B
						D	Bolt hole			Bolt size	g	t	f		
in.	mm						C	NO.	h						
5	125	125	332	360	356	254	216.0	8	22	3/4	186	23.9	1.6	88.5	210
6	150	150	374	360	394	279	241.5	8	22	3/4	216	25.4	1.6	88.5	210
8	200	200	409	500	457	343	298.5	8	22	3/4	270	28.6	1.6	134	377

Dimensions:G-10UTB3H（M）

Unit: mm

Nominal size		d	H	D1	L	End flange								A	B
						D	Bolt hole			Bolt size	g	t	f		
mm	in.						C	NO.	h						
125	5	125	332	360	300	250	210	8	23	M20	182	20	2	88.5	210
150	6	150	374	360	340	280	240	8	23	M20	212	22	2	88.5	210
200	8	200	409	500	450	330	290	12	23	M20	262	22	2	134	377

●Hard graphite seated ball valve（Trim 3H）

150／10SCTB3H

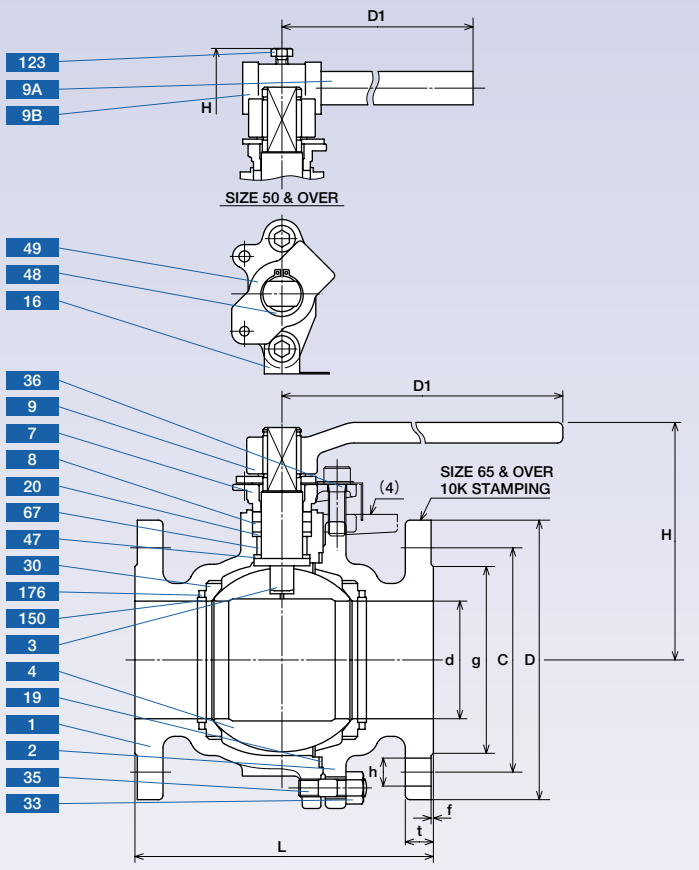

Construction and materials

No.	Parts	Specifications
		150SCTB3H
1	Body	A216 Gr. WCB
2	Body cap	A216 Gr. WCB
3	Stem	JIS SUS630*
4	Ball	A276 Type 304 or Gr. CF8
7	Gland	A351 Gr. CF8
8	Gland packing	Flexible graphite
9	Handle	Ductile iron
9A	Handle bar	Carbon steel (size 2 & over)
9B	Handle head	Ductile Iron (size 2 & over)
10	Handle nut	Stainless steel (up to size 1)
16	Name plate	Aluminum
19	Gasket	Flexible graphite
20	Packing washer	A276 Type 316
30	Ball seat	Carbon + Stainless steel
33	Cup nut	A194 Gr. 2H
35	Cap bolt	A193 Gr. B7
36	Gland bolt	A193 Gr. B8
47	Thrust washer	Carbon
48	Snap ring	Carbon steel
49	Stopper	A276 Type 304
67	Stem bearing	Carbon
123	Handle bolt	Stainless steel (size 2 & over)
150	Inner ring	Stainless steel
176	Seat gasket	Flexible graphite

* Equivalent to ASTM A564 TYPE 630

Dimensions:150SCTB3H

Unit: mm

Nominal size		d	H	D1	L	End flange							
						D	Bolt hole			Bolt size	g	t	f
in.	mm						C	NO.	h				
1/2	15	15	102	130	108	89	60.5	4	16	1/2	35	11.2	1.6
3/4	20	20	105	130	117	98	70.0	4	16	1/2	43	11.2	1.6
1	25	25	124	160	127	108	79.5	4	16	1/2	51	11.2	1.6
1 1/2	40	40	115	230	165	127	98.5	4	16	1/2	73	14.3	1.6
2	50	50	141	300	178	152	120.5	4	19	5/8	92	15.9	1.6
2 1/2	65	65	188	600	190	178	139.5	4	19	5/8	105	17.5	1.6
3	80	80	197	600	203	190	152.5	4	19	5/8	127	19.1	1.6
4	100	100	242	1000	229	229	190.5	8	19	5/8	157	23.9	1.6

Dimensions:10SCTB3H

Unit: mm

Nominal size		d	H	D1	L	End flange							
						D	Bolt hole			Bolt size	g	t	f
mm	in.						C	NO.	h				
15	1/2	15	102	130	108	95	70	4	15	M12	51	12	1
20	3/4	20	105	130	117	100	75	4	15	M12	56	14	1
25	1	25	124	160	127	125	90	4	19	M16	67	14	1
40	1 1/2	40	115	230	165	140	105	4	19	M16	81	16	2
50	2	50	141	300	178	155	120	4	19	M16	96	16	2
65	2 1/2	65	188	600	190	175	140	4	19	M16	116	18	2
80	3	80	197	600	203	185	150	8	19	M16	126	19.1	2
100	4	100	242	1000	229	210	175	8	19	M16	121	23.9	2

Note: (1) " t " shall be in accordance with ASME B16.5 class 150, except for size 15-65.

●Hard graphite seated ball valve（Trim 3H）

G-150／10SCTB3H

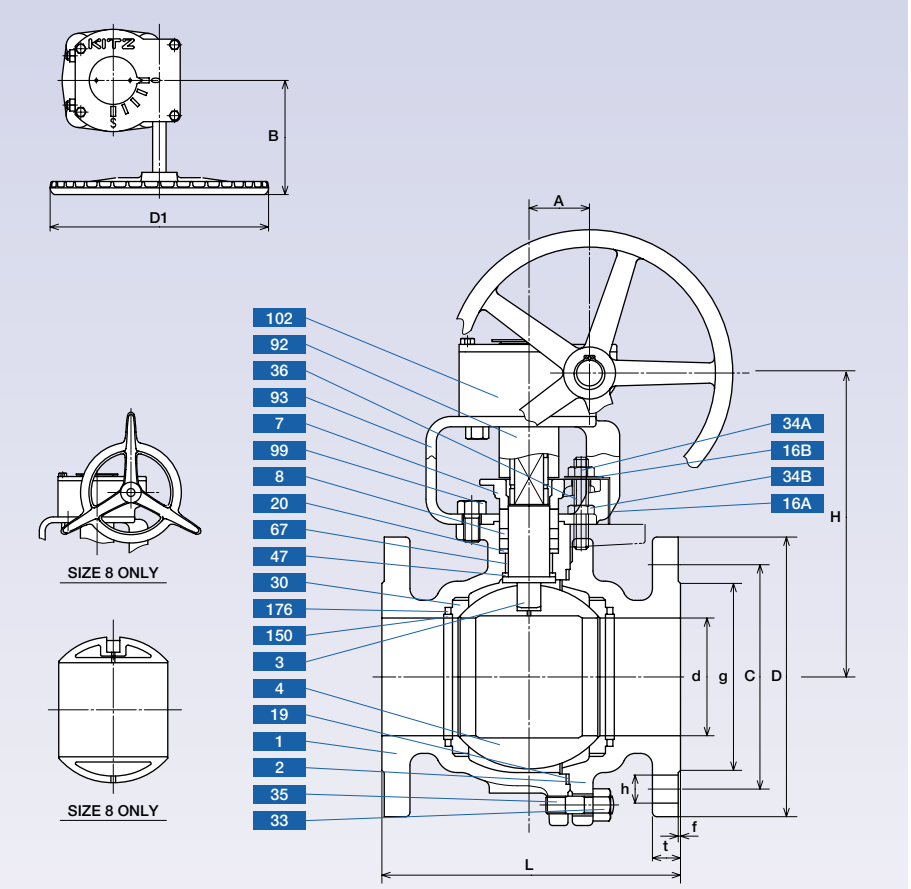

Construction and materials

No.	Parts	Specifications
		G-150SCTB3H
1	Body	A216 Gr. WCB
2	Body cap	A216 Gr. WCB
3	Stem	JIS SUS630*
4	Ball	A351 Gr. CF8 or A276 Type 304
7	Gland	A351 Gr. CF8
8	Gland packing	Flexible graphite
16A	Name plate	Aluminum
16B	Washer	Carbon steel
19	Gasket	Flexible graphite
20	Packing washer	A276 Type 316
30	Ball seat	Carbon + Stainless steel
33	Cup nut	A194 Gr. 2H
34A	Grand nut	A194 Gr. 8
34B	Nut	A194 Gr. 8
35	Cap bolt	A193 Gr. B7
36	Gland bolt	A193 Gr. B8
47	Thrust washer	Carbon
67	Stem bearing	Carbon
92	Connector	Carbon steel
93	Bracket	Ductile iron
99	Bolt	Carbon steel
102	Gear unit	
150	Inner ring	Stainless steel
176	Seat gasket	Flexible graphite

* Equivalent to ASTM A564 TYPE 630

Dimensions:G-150SCTB3H

Unit: mm

Nominal size		d	H	D1	L	End flange								A	B
						D	Bolt hole			Bolt size	g	t	f		
in.	mm						C	NO.	h						
6	150	150	374	360	394	279	241.5	8	22	3/4	216	25.4	1.6	88.5	210
8	200	200	409	500	457	343	298.5	8	22	3/4	270	28.6	1.6	314	377

Dimensions:G-10SCTB3H

Unit: mm

Nominal size		d	H	D1	L	End flange								A	B
						D	Bolt hole			Bolt size	g	t	f		
mm	in.						C	NO.	h						
125	5	125	332	360	356	250	210	8	23	M20	182	23.9	2	88.5	210
150	6	150	374	360	394	280	240	8	23	M20	212	25.4	2	88.5	210
200	8	200	409	500	457	330	290	12	23	M20	262	28.6	2	134	377

Note: (1) " t " shall be in accordance with ASME B16.5 class 150.

●Hard graphite seated ball valve（Trim 3H）

300／20UTB3H（M）

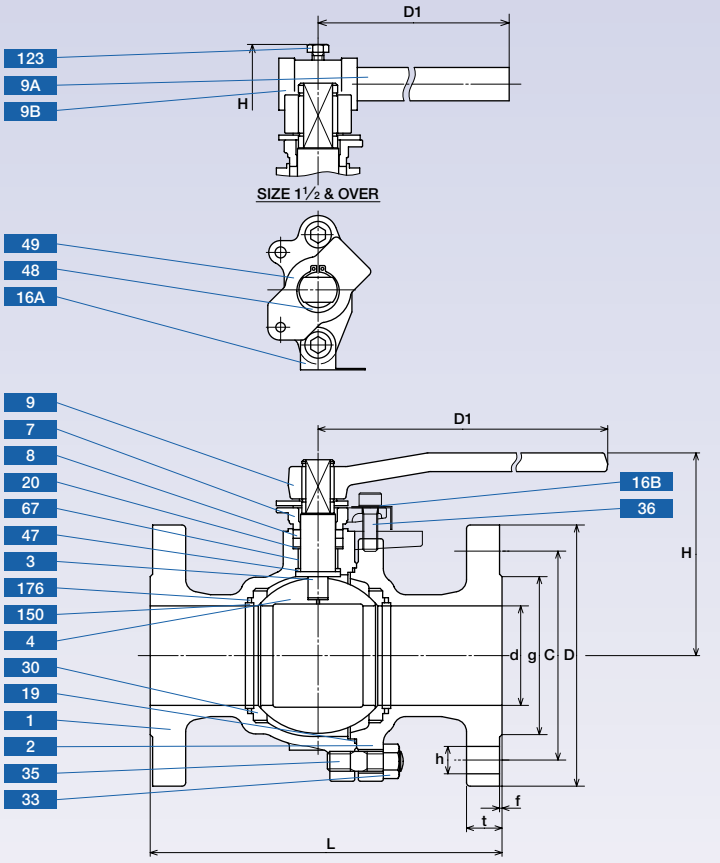

Construction and materials

No.	Parts	Specifications
		300UTB3H
1	Body	A351 Gr. CF8
2	Body cap	A351 Gr. CF8
3	Stem	JIS SUS630*
4	Ball	A351 Gr. CF8 or A276 Type 304
7	Gland	A351 Gr. CF8
8	Gland packing	Flexible graphite
9	Handle	Ductile Iron
9A	Handle bar	Carbon steel (size 1½ & over)
9B	Handle head	Ductile Iron (size 1½ & over)
16A	Name plate	Aluminum
16B	Washer	Carbon steel
19	Gasket	Flexible graphite
20	Packing washer	A276 Type 316
30	Ball seat	Carbon + Stainless steel
33	Cup nut	A194 Gr. 8
35	Cap bolt	A193 Gr. B8
36	Gland bolt	A193 Gr. B8
47	Thrust washer	Carbon
48	Snap ring	A276 Type 304
49	Stopper	A276 Type 304
67	Stem bearing	Carbon
123	Handle bolt	Carbon steel (size 1½ & over)
150	Inner ring	Stainless steel
176	Seat gasket	Flexible Graphite

* Equivalent to ASTM A564 TYPE 630

Dimensions:300UTB3H（M）

Unit: mm

Nominal size		d	H	D1	L	End flange							
						D	Bolt hole			Bolt size	g	t	f
in.	mm						C	NO.	h				
1/2	15	15	102	130	140	95	66.5	4	16	1/2	35	14.3	1.6
3/4	20	20	105	130	152	117	82.5	4	19	5/8	43	15.9	1.6
1	25	25	124	160	165	124	89.0	4	19	5/8	51	17.5	1.6
1 1/2	40	40	136	600	190	156	114.5	4	22	3/4	73	20.7	1.6
2	50	50	141	600	216	165	127.0	8	19	5/8	92	22.3	1.6
3	80	80	197	1000	283	210	168.0	8	22	3/4	127	28.6	1.6

Dimensions:20UTB3H（M）

Unit: mm

Nominal size		d	H	D1	L	End flange							
						D	Bolt hole			Bolt size	g	t	f
mm	in.						C	NO.	h				
15	1/2	15	102	130	140	95	70	4	15	M12	51	14.3	1
20	3/4	20	105	130	152	100	75	4	15	M12	56	16	1
25	1	25	124	160	165	125	90	4	19	M16	67	17.5	1
40	1 1/2	40	136	600	190	140	105	4	19	M16	81	20.7	2
50	2	50	141	600	216	155	120	8	19	M16	96	22.3	2
65	2 1/2	65	188	1000	241	175	140	8	19	M16	116	25.4	2
80	3	80	197	1000	283	200	160	8	23	M20	132	28.6	2

Note: (1) " t " shall be in accordance with ASME B16.5 class 300, except for size 20.

●Hard graphite seated ball valve（Trim 3H）

G-300／20UTB3H（M）

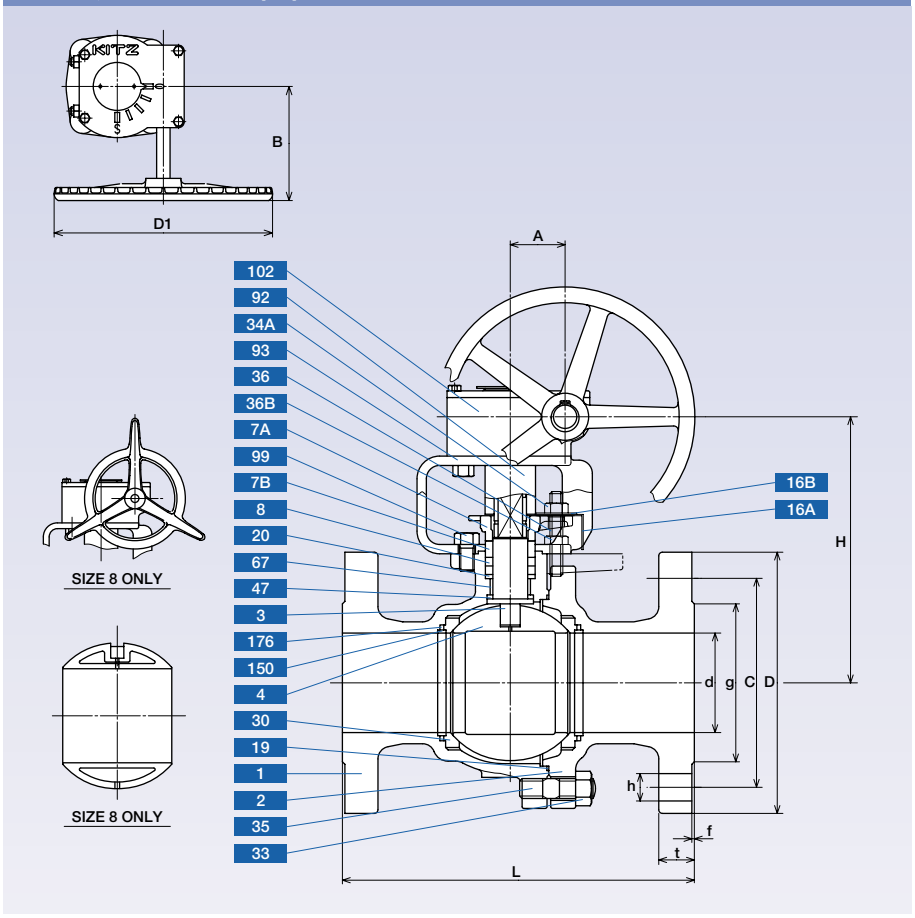

Construction and materials

No.	Parts	Specifications
		G-300UTB3H
1	Body	A351 Gr. CF8
2	Body cap	A351 Gr. CF8
3	Stem	JIS SUS630*
4	Ball	A351 Gr. CF8 or A276 Type 304
7	Gland	A351 Gr. CF8
8	Gland packing	Flexible graphite
16A	Name plate	Aluminum
16B	Washer	Carbon steel
19	Gasket	Flexible graphite
20	Packing washer	A276 Type 316
30	Ball seat	Carbon + Stainless steel
33	Cup nut	A194 Gr. 8
34A	Grand nut	A194 Gr. 8
34B	Nut	A194 Gr. 8
35	Cap bolt	A193 Gr. B8
36	Gland bolt	A193 Gr. B8
47	Thrust washer	Carbon
67	Stem bearing	Carbon
92	Connector	Carbon steel
93	Bracket	Ductile iron
99	Bolt	Carbon steel
102	Gear unit	
150	Inner ring	Stainless steel
176	Seat gasket	Flexible graphite

* Equivalent to ASTM A564 TYPE 630

Dimensions:G-300UTB3H（M）

Unit: mm

Nominal size		d	H	D1	L	End flange								A	B
						D	Bolt hole			Bolt size	g	t	f		
in.	mm						C	NO.	h						
4	100	100	292	310	305	254	200.0	8	22	3/4	157	31.8	1.6	65.5	165
6	150	150	374	360	403	318	270.0	12	22	3/4	216	36.6	1.6	88.5	210
8	200	200	409	500	502	381	330.0	12	25	7/8	270	41.3	1.6	134	377

Dimensions:G-20UTB3H（M）

Unit: mm

Nominal size		d	H	D1	L	End flange								A	B
						D	Bolt hole			Bolt size	g	t	f		
mm	in.						C	NO.	h						
100	4	100	292	310	305	225	185	8	23	M20	160	31.8	2	65.5	165
150	6	150	374	360	403	305	260	12	25	M22	230	36.6	2	88.5	210
200	8	200	409	500	502	350	305	12	25	M22	275	41.3	2	134	377

Note:（1）" t " shall be in accordance with ASME B16.5 class 300.

●Hard graphite seated ball valve（Trim 3H）

300／20SCTB3H

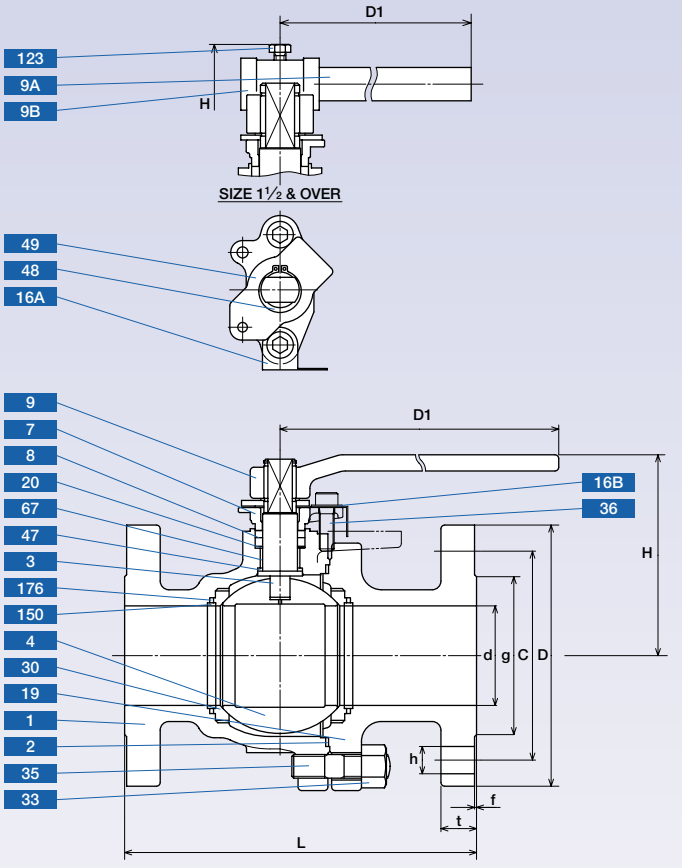

Construction and materials

No.	Parts	Specifications
		300SCTB3H
1	Body	A216 Gr. WCB
2	Body cap	A216 Gr. WCB
3	Stem	JIS SUS630*
4	Ball	A351 Gr. CF8 or A276 Type 304
7	Gland	A351 Gr. CF8
8	Gland packing	Flexible graphite
9	Handle	Ductile Iron
9A	Handle bar	Carbon steel (size 1½ & over)
9B	Handle head	Ductile Iron (size 1½ & over)
16A	Name plate	Aluminum
16B	Washer	Carbon steel
19	Gasket	Flexible graphite
20	Packing washer	A276 Type 316
30	Ball seat	Carbon + Stainless steel
33	Cup nut	A194 Gr. 2H
35	Cap bolt	A193 Gr. B7
36	Gland bolt	A193 Gr. B8
47	Thrust washer	Carbon
48	Snap ring	Carbon steel
49	Stopper	A276 Type 304
67	Stem bearing	Carbon
123	Handle bolt	Carbon steel (size 1½ & over)
150	Inner ring	Stainless steel
176	Seat gasket	Flexible graphite

* Equivalent to ASTM A564 TYPE 630

Dimensions:300SCTB3H

Unit: mm

Nominal size		d	H	D1	L	End flange							
						D	Bolt hole			Bolt size	g	t	f
in.	mm						C	NO.	h				
1/2	15	15	102	130	140	95	66.5	4	16	1/2	35	14.3	1.6
3/4	20	20	105	130	152	117	82.5	4	19	5/8	43	15.9	1.6
1	25	25	124	160	165	124	89.0	4	19	5/8	51	17.5	1.6
1 1/2	40	40	136	600	190	156	114.5	4	22	3/4	73	20.7	1.6
2	50	50	141	600	216	165	127.0	8	19	5/8	92	22.3	1.6
2 1/2	65	65	188	1000	241	190	149.0	8	22	3/4	105	25.4	1.6
3	80	80	197	1000	283	210	168.0	8	22	3/4	127	28.6	1.6

Dimensions:20SCTB3H

Unit: mm

Nominal size		d	H	D1	L	End flange							
						D	Bolt hole			Bolt size	g	t (2)	f
mm	in.						C	NO.	h				
15	1/2	15	102	130	140	95	70	4	15	M12	51	14.3	1
20	3/4	20	105	130	152	100	75	4	15	M12	56	16	1
25	1	25	124	160	165	125	90	4	19	M16	67	17.5	1
40	1 1/2	40	136	600	190	140	105	4	19	M16	81	20.7	2
50	2	50	141	600	216	155	120	8	19	M16	96	22.3	2
65	2 1/2	65	188	1000	241	175	140	8	19	M16	116	25.4	2
80	3	80	197	1000	283	200	160	8	23	M20	132	28.6	2

Note: (1) " t " shall be in accordance with ASME B16.5 class 300, except for size 20.

●Hard graphite seated ball valve（Trim 3H）

G-300／20SCTB3H

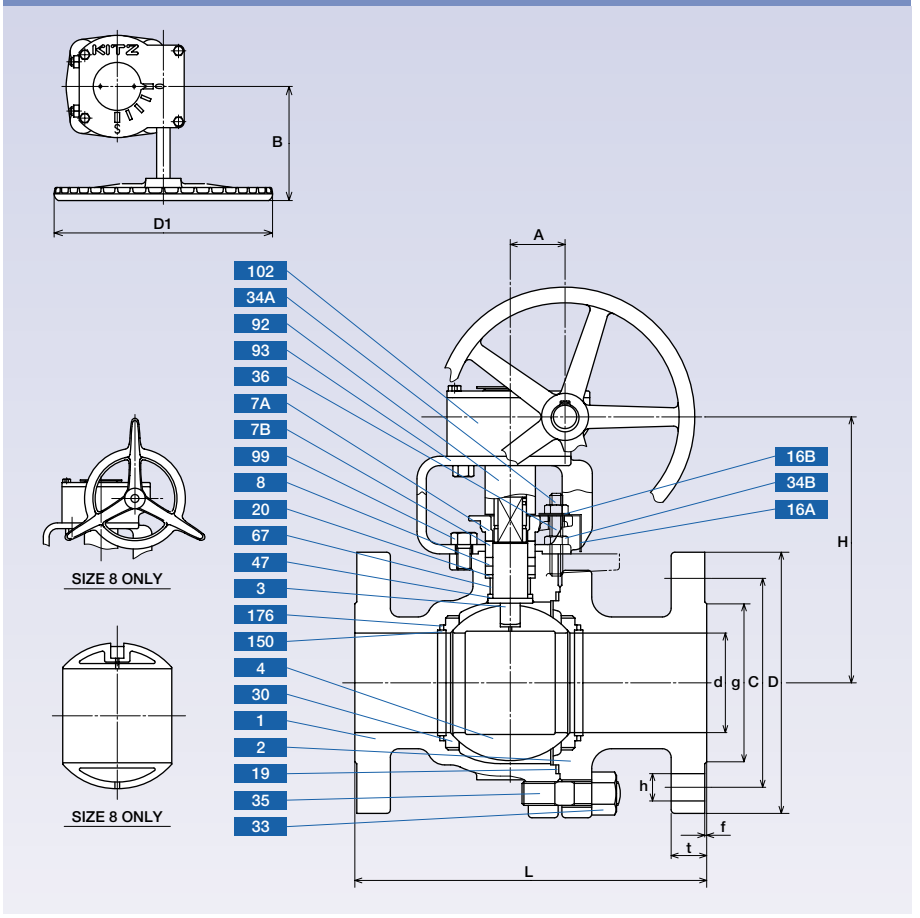

Construction and materials

No.	Parts	Specifications
		G-300SCTB3H
1	Body	A216 Gr. WCB
2	Body cap	A216 Gr. WCB
3	Stem	JIS SUS630*
4	Ball	A351 Gr. CF8 or A276 Type 304
7	Gland	A351 Gr. CF8
8	Gland packing	Flexible graphite
16A	Name plate	Stainless steel
16B	LEV plate	Stainless steel
19	Gasket	Flexible graphite
20	Packing washer	A276 Type 316
30	Ball seat	Carbon + Stainless steel (3)
33	Cup nut	A194 Gr. 2H
34A	Grand nut	A194 Gr. 8
34B	Nut	A194 Gr. 8
35	Cap bolt	A193 Gr. B7
36	Gland bolt	A193 Gr. B8
47	Thrust washer	Carbon
67	Stem bearing	Carbon
92	Connector	Carbon steel
93	Bracket	Ductile iron
99	Bolt	Carbon steel
102	Gear unit	
150	Inner ring	Stainless steel
176	Seat gasket	Flexible graphite

* Equivalent to ASTM A564 TYPE 630

Dimensions:G-300SCTB3H

Unit: mm

Nominal size		d	H	D1	L	End flange								A	B
						D	Bolt hole			Bolt size	g	t	f		
in.	mm						C	NO.	h						
4	100	100	292	310	305	254	200.0	8	22	3/4	157	31.8	1.6	65.5	165
6	150	150	374	360	403	318	270.0	12	22	3/4	216	36.6	1.6	88.5	210
8	200	200	409	500	502	381	330.0	12	25	7/8	270	41.3	1.6	134	377

Dimensions:G-20SCTB3H

Unit: mm

Nominal size		d	H	D1	L	End flange								A	B
						D	Bolt hole			Bolt size	g	t	f		
mm	in.						C	NO.	h						
100	4	100	292	310	305	225	185	8	23	M20	160	31.8	2	65.5	165
125	5	125	332	360	381	270	225	8	25	M22	195	26	2	88.5	210
150	6	150	374	360	403	305	260	12	25	M22	230	36.6	2	88.5	210
200	8	200	409	500	502	350	305	12	25	M22	275	41.3	2	134	377

Note: (1)" t " shall be in accordance with ASME B16.5 class 300, except for size 125.

●Metal seated ball valve（Trim 5H）

150／10UTB5H（M）

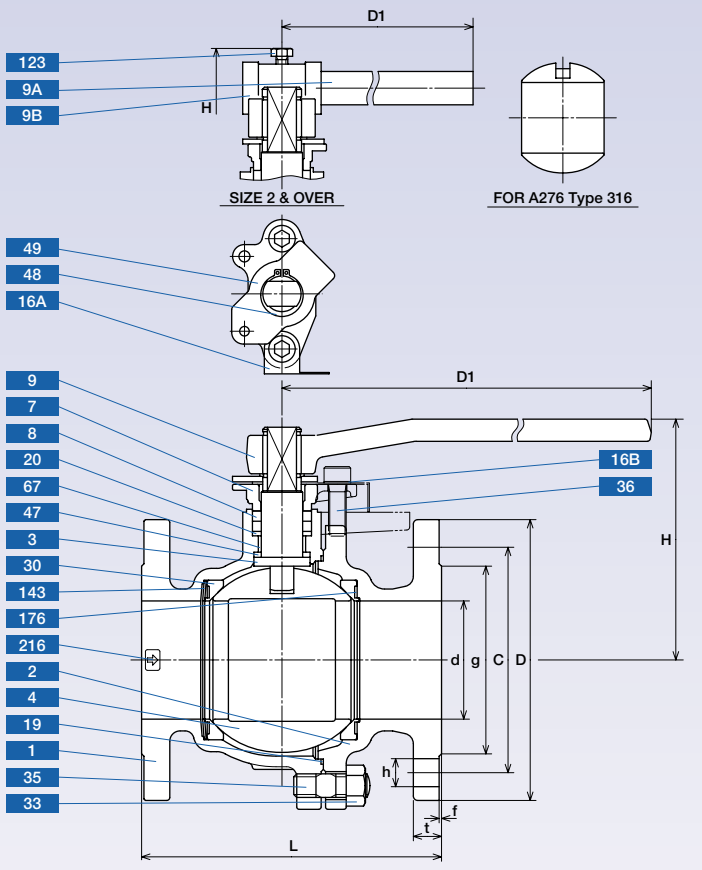

Construction and materials

No.	Parts	Specifications
		150UTB5H
1	Body	A351 Gr. CF8
2	Body cap	A351 Gr. CF8
3	Stem	JIS SUS630*1
4	Ball	A351 Gr. CF8M*2 or A276 Type 316*2
7	Gland	A351 Gr. CF8
8	Gland packing	Flexible graphite
9	Handle	Ductile iron
9A	Handle bar	Carbon steel (size 2 & over)
9B	Handle head	Ductile iron (size 2 & over)
16A	Name plate	Aluminum
16B	Washer	Carbon steel
19	Gasket	Flexible graphite
20	Packing washer	A276 Type 316
30	Ball seat	A276 Type 316 + Ni-Cr Alloy
33	Cup nut	A194 Gr. 8
35	Cap bolt	A193 Gr. B8
36	Gland bolt	A193 Gr. B8
47	Thrust washer	Carbon
48	Snap ring	A276 Type 304
49	Stopper	A276 Type 304 (size 1½ & over)
67	Stem bearing	Carbon
123	Handle bolt	Carbon steel (size 2 & over)
143	Seat spring	A276 Type 316
176	Seat gasket	Flexible graphite
216	Pressure direction plate	A276 Type 304

*1 Equivalent to ASTM A564 TYPE 630
*2 Cr. plating

Dimensions:150UTB5H（M）

Unit: mm

Nominal size		d	H	D1	L	End flange							
						D	Bolt hole			Bolt size	g	t	f
in.	mm						C	NO.	h				
1/2	15	15	102	130	108	89	60.5	4	16	1/2	35	11.2	1.6
3/4	20	20	105	130	117	98	70.0	4	16	1/2	43	11.2	1.6
1	25	25	124	160	127	108	79.5	4	16	1/2	51	11.2	1.6
1 1/2	40	40	115	230	165	127	98.5	4	16	1/2	73	14.3	1.6
2	50	50	141	300	178	152	120.5	4	19	5/8	92	15.9	1.6
2 1/2	65	65	188	600	190	178	139.5	4	19	5/8	105	17.5	1.6
3	80	80	197	600	203	190	152.5	4	19	5/8	127	19.1	1.6
4	100	100	242	1000	229	229	190.5	8	19	5/8	157	23.9	1.6

Dimensions:10UTB5H（M）

Unit: mm

Nominal size		d	H	D1	L	End flange							
						D	Bolt hole			Bolt size	g	t	f
mm	in.						C	NO.	h				
15	1/2	15	102	130	110	95	70	4	15	M12	51	12	1
20	3/4	20	105	130	120	100	75	4	15	M12	56	14	1
25	1	25	124	160	130	125	90	4	19	M16	67	14	1
32	1 1/4	32	130	160	140	135	100	4	19	M16	76	16	2
40	1 1/2	40	115	230	165	140	105	4	19	M16	81	16	2
50	2	50	141	300	180	155	120	4	19	M16	96	16	2
65	2 1/2	65	188	600	190	175	140	4	19	M16	116	18	2
80	3	80	197	600	200	185	150	8	19	M16	126	18	2
100	4	100	242	1000	230	210	175	8	19	M16	151	18	2

Note:（1）Please install valve so that the arrow indicated should be in the above direction.

●Metal seated ball valve（Trim 5H）

G-150／10UTB5H（M）

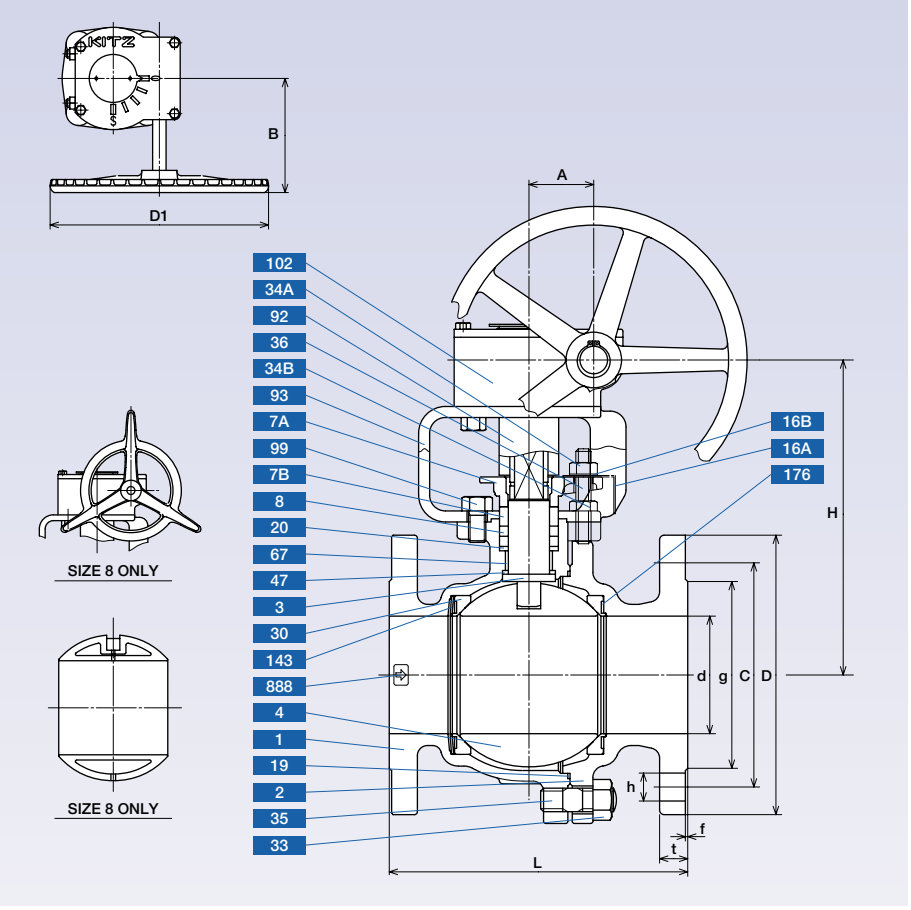

Construction and materials

No.	Parts	Specifications
		G-150UTB5H
1	Body	A351 Gr. CF8
2	Body cap	A351 Gr. CF8
3	Stem	JIS SUS630*1
4	Ball	A351 Gr. CF8M*2 or A276 Type 316*2
7	Gland	A351 Gr. CF8
8	Gland packing	Flexible graphite
16A	Name plate	Aluminum
16B	Washer	Carbon steel
19	Gasket	Flexible graphite
20	Packing washer	A276 Type 316
30	Ball seat	A276 Type 316 + Ni-Cr Alloy
33	Cup nut	A194 Gr. 8
34A	Grand nut	A194 Gr. 8
34B	Nut	A194 Gr. 8
35	Cap bolt	A193 Gr. B8
36	Gland bolt	A193 Gr. B8
47	Thrust washer	Carbon
67	Stem bearing	Carbon
92	Connector	Carbon steel
93	Bracket	Ductile iron
99	Bolt	Carbon steel
102	Gear unit	
143	Seat spring	A276 Type 316
176	Seat gasket	Flexible graphite
216	Pressure direction plate	A276 Type 304

*1 Equivalent to ASTM A564 TYPE 630
*2 Cr. plating

Dimensions:G-150UTB5H（M）

Unit: mm

Nominal size		d	H	D1	L	End flange								A	B
						D	Bolt hole			Bolt size	g	t	f		
in.	mm						C	NO.	h						
5	125	125	332	360	356	254	216.0	8	22	3/4	186	23.9	1.6	88.5	210
6	150	150	374	360	394	279	241.5	8	22	3/4	216	25.4	1.6	88.5	210
8	200	200	409	500	457	343	298.5	8	22	3/4	270	28.6	1.6	134	377

Note:（1）Please install valve so that the arrow indicated should be in the above direction.

Dimensions:G-10UTB5H（M）

Unit: mm

Nominal size		d	H	D1	L	End flange								A	B
						D	Bolt hole			Bolt size	g	t	f		
mm	in.						C	NO.	h						
125	5	125	332	360	300	250	210	8	23	M20	182	20	2	88.5	210
150	6	150	374	360	340	280	240	8	23	M20	212	22	2	88.5	210
200	8	200	409	500	450	330	290	12	23	M20	262	22	2	134	377

Note:（1）Please install valve so that the arrow indicated should be in the above direction.

●Metal seated ball valve（Trim 5H）

150／10SCTB5H

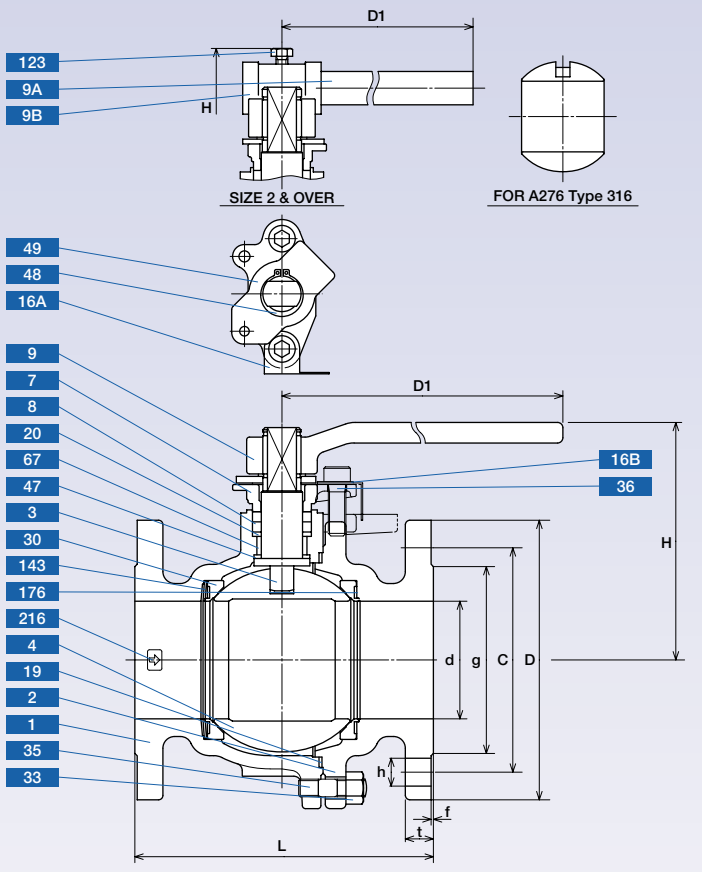

Construction and materials

No.	Parts	Specifications
		150SCTB5H
1	Body	A216 Gr. WCB
2	Body cap	A216 Gr. WCB
3	Stem	JIS SUS630*1
4	Ball	A351 Gr. CF8M*2 or A276 Type 316*2
7	Gland	A351 Gr. CF8
8	Gland packing	Flexible graphite
9	Handle	Ductile iron
9A	Handle bar	Carbon steel (size 2 & over)
9B	Handle head	Ductile iron (size 2 & over)
16A	Name plate	Aluminum
16B	Washer	Carbon steel
19	Gasket	Flexible graphite
20	Packing washer	A276 Type 316
30	Ball seat	A276 Type 316 + Ni-Cr Alloy
33	Cup nut	A194 Gr. 2H
35	Cap bolt	A193 Gr. B7
36	Gland bolt	A193 Gr. B8
47	Thrust washer	Carbon
48	Snap ring	Carbon steel
49	Stopper	A276 Type 304
67	Stem bearing	Carbon
123	Handle bolt	Stainless steel (size 2 & over)
143	Seat spring	A276 Type 316
176	Seat gasket	Flexible graphite
216	Pressure direction plate	A276 Type 304

*1 Equivalent to ASTM A564 TYPE 630
*2 Cr. plating

Dimensions:150SCTB5H

Unit: mm

Nominal size		d	H	D1	L	End flange							
						D	Bolt hole			Bolt size	g	t	f
in.	mm						C	NO.	h				
1/2	15	15	102	130	108	89	60.5	4	16	1/2	35	11.2	1.6
3/4	20	20	105	130	117	98	70.0	4	16	1/2	43	11.2	1.6
1	25	25	124	160	127	108	79.5	4	16	1/2	51	11.2	1.6
1 1/2	40	40	115	230	165	127	98.5	4	16	1/2	73	14.3	1.6
2	50	50	141	300	178	152	120.5	4	19	5/8	92	15.9	1.6
2 1/2	65	65	187	600	190	178	139.5	4	19	5/8	105	17.5	1.6
3	80	80	197	600	203	190	152.5	4	19	5/8	127	19.1	1.6
4	100	100	242	1000	229	229	190.5	8	19	5/8	157	23.9	1.6

Note:（1）Please install valve so that the arrow indicated should be in the above direction.

Dimensions:10SCTB5H

Unit: mm

Nominal size		d	H	D1	L	End flange							
						D	Bolt hole			Bolt size	g	t	f
mm	in.						C	NO.	h				
15	1/2	15	102	130	108	95	70	4	15	M12	51	12	1
20	3/4	20	105	130	117	100	75	4	15	M12	56	14	1
25	1	25	124	160	127	125	90	4	19	M16	67	14	1
40	1 1/2	40	115	230	165	140	105	4	19	M16	81	16	2
50	2	50	141	300	178	155	120	4	19	M16	96	16	2
65	2 1/2	65	187	600	190	175	140	4	19	M16	116	18	2
80	3	80	197	600	203	185	150	8	19	M16	126	19.1	2
100	4	100	242	1000	229	210	175	8	19	M16	151	23.9	2

Note:（1）Please install valve so that the arrow indicated should be in the above direction.（2）" t " shall be in accordance with ANSI B16.5 class 150, except for size 15-65.

●Metal seated ball valve（Trim 5H）

G-150／10SCTB5H

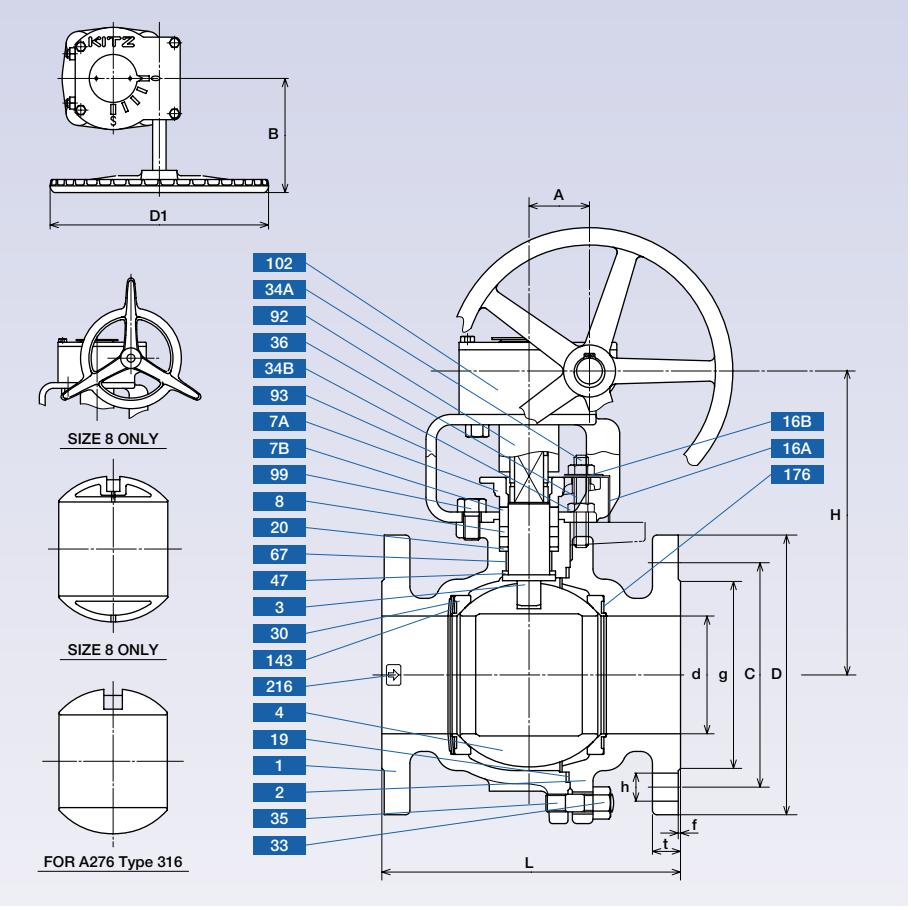

Construction and materials

No.	Parts	Specifications
		G-150SCTB5H
1	Body	A216 Gr. WCB
2	Body cap	A216 Gr. WCB
3	Stem	JIS SUS630*1
4	Ball	A351 Gr. CF8M*2 or A276 Type 316*2
7	Gland	A351 Gr. CF8
8	Gland packing	Flexible graphite
16A	Name plate	Aluminum
16B	Washer	Carbon steel
19	Gasket	Flexible graphite
20	Packing washer	A276 Type 316
30	Ball seat	A276 Type 316 + Ni-Cr Alloy
33	Cup nut	A194 Gr. 2H
34A	Grand nut	A194 Gr. 8
34B	Nut	A194 Gr. 8
35	Cap bolt	A193 Gr. B7
36	Gland bolt	A193 Gr. B8
47	Thrust washer	Carbon
67	Stem bearing	Carbon
92	Connector	Carbon steel
93	Bracket	Ductile iron
99	Bolt	Carbon steel
102	Gear unit	
143	Seat spring	A276 Type 316
176	Seat gasket	Flexible graphite
216	Pressure direction plate	A276 Type 304

*1 Equivalent to ASTM A564 TYPE 630
*2 Cr. plating

Dimensions:G-150SCTB5H

Unit: mm

Nominal size		d	H	D1	L	End flange								A	B
						D	Bolt hole			Bolt size	g	t	f		
in.	mm						C	NO.	h						
6	150	150	374	360	394	279	241.5	8	22	3/4	216	25.4	1.6	88.5	210
8	200	200	409	500	457	343	298.5	8	22	3/4	270	28.6	1.6	134	377

Note: (1) Please install valve so that the arrow indicated should be in the above direction.

Dimensions:G-10SCTB5H

Unit: mm

Nominal size		d	H	D1	L	End flange								A	B
						D	Bolt hole			Bolt size	g	t	f		
mm	in.						C	NO.	h						
125	5	125	332	360	356	250	210	8	23	M20	182	23.9	2	88.5	210
150	6	150	374	360	394	280	240	8	23	M20	212	25.4	2	88.5	210
200	8	200	409	500	457	330	290	12	23	M20	262	28.6	2	134	377

Note: (1) " t " shall be in accordance with ANSI B16.5 class 150. (2) Please install valve so that the arrow indicated should be in the above direction.

●Metal seated ball valve（Trim 5H）

300／20UTB5H（M）

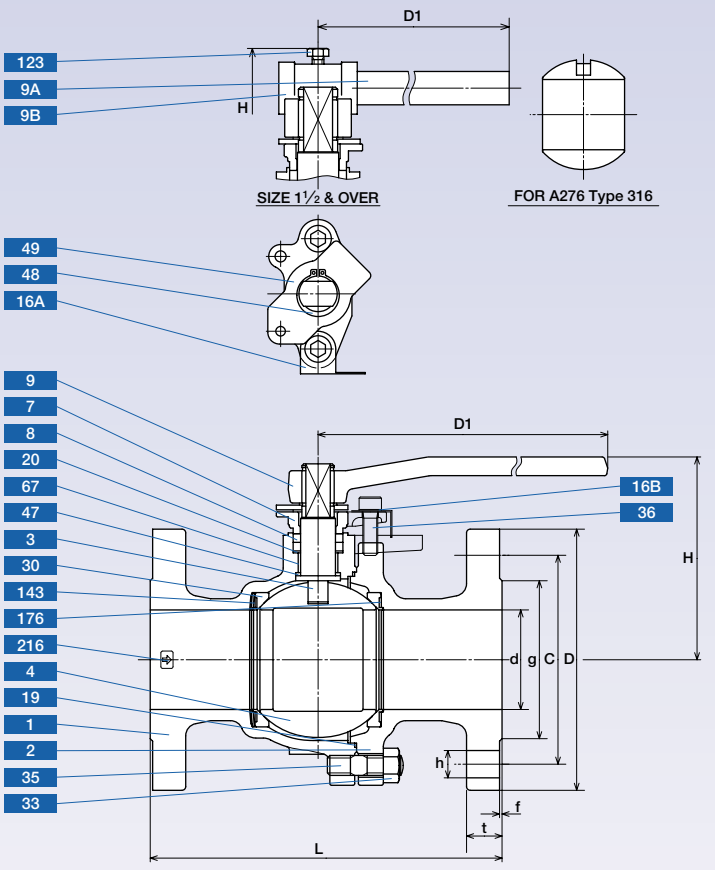

Construction and materials

No.	Parts	Specifications
		300UTB5H
1	Body	A351 Gr. CF8
2	Body cap	A351 Gr. CF8
3	Stem	JIS SUS630*1
4	Ball	A351 Gr. CF8M*2 or A276 Type 316*2
7	Gland	A351 Gr. CF8
8	Gland packing	Flexible graphite
9	Handle	Ductile ion
9A	Handle bar	Carbon steel (size 1½ & over)
9B	Handle head	Ductile ion (size 1½ & over)
16A	Name plate	Aluminum
16B	Washer	Carbon steel
19	Gasket	Flexible graphite
20	Packing washer	A276 Type 316
30	Ball seat	A276 Type 316 + Nl-Cr Alloy
33	Cup nut	A194 Gr. 8
35	Cap bolt	A193 Gr. B8
36	Gland bolt	A193 Gr. B8
47	Thrust washer	Carbon
48	Snap ring	A276 Type 304
49	Stopper	A276 Type 304
67	Stem bearing	Carbon
123	Handle bolt	Carbon steel (size 1½ & over)
143	Seat spring	A276 Type 316
176	Seat gasket	Flexible graphite
216	Pressure direction plate	A276 Type 304

*1 Equivalent to ASTM A564 TYPE 630
*2 Cr. plating

Dimensions:300UTB5H（M）

Unit: mm

Nominal size		d	H	D1	L	End flange							
						D	Bolt hole			Bolt size	g	t	f
in.	mm						C	NO.	h				
1/2	15	15	102	130	140	95	66.5	4	16	1/2	35	14.3	1.6
3/4	20	20	105	130	152	117	82.5	4	19	5/8	43	15.9	1.6
1	25	25	124	160	165	124	89.0	4	19	5/8	51	17.5	1.6
1 1/2	40	40	136	600	190	156	114.5	4	22	3/4	73	20.7	1.6
2	50	50	141	600	216	165	127.0	8	19	5/8	92	22.3	1.6
3	80	80	197	1000	283	210	168.0	8	22	3/4	127	28.6	1.6

Note:（1）Please install valve so that the arrow indicated should be in the above direction.

Dimensions:20UTB5H（M）

Unit: mm

Nominal size		d	H	D1	L	End flange							
						D	Bolt hole			Bolt size	g	t	f
mm	in.						C	NO.	h				
15	1/2	15	102	130	140	95	70	4	15	M12	51	14.3	1
20	3/4	20	105	130	152	100	75	4	15	M12	56	16	1
25	1	25	124	160	165	125	90	4	19	M16	67	17.5	1
40	1 1/2	40	136	600	190	140	105	4	19	M16	81	20.7	2
50	2	50	141	600	216	155	120	8	19	M16	96	22.3	2
80	3	80	197	1000	283	200	160	8	23	M20	132	28.6	2

Note:（1）Please install valve so that the arrow indicated should be in the above direction.（2）" t " shall be in accordance with ASME B16.5 class 300, except for size 20.

●Metal seated ball valve（Trim 5H）

G-300／20UTB5H（M）

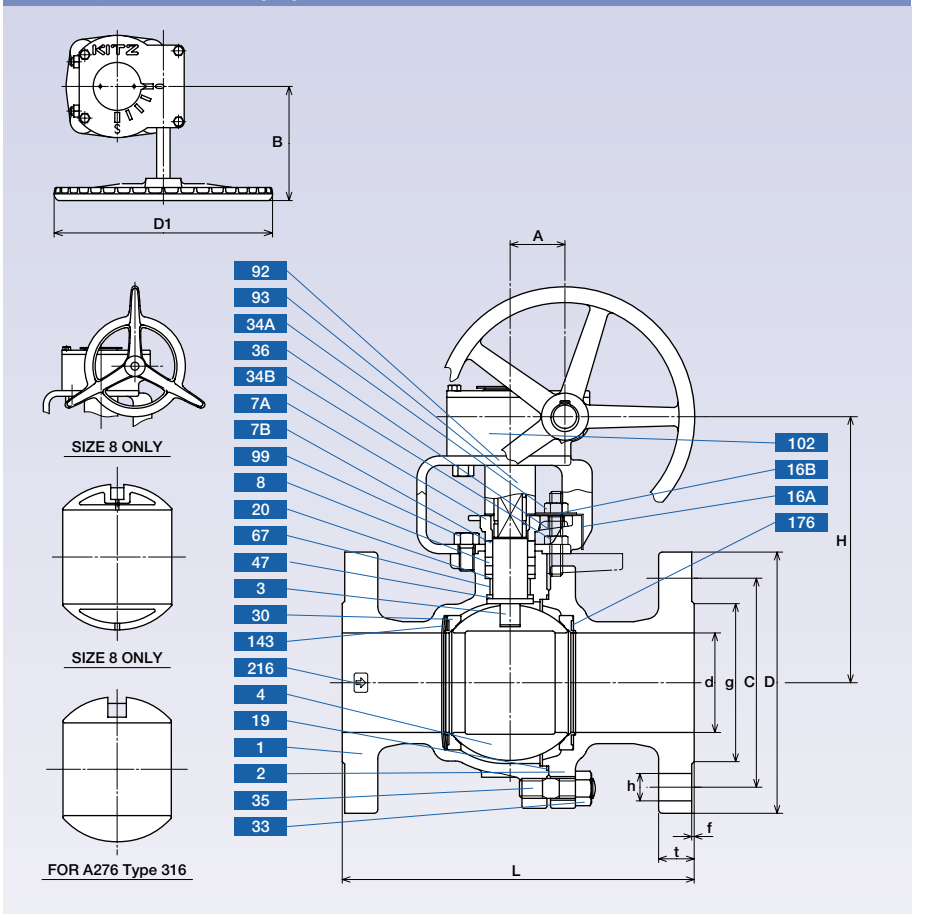

Construction and materials

No.	Parts	Specifications
		G-300UTB5H
1	Body	A351 Gr. CF8
2	Body cap	A351 Gr. CF8
3	Stem	JIS SUS630*1
4	Ball	A351 Gr. CF8M*2 or A276 Type 316*2
7A	Gland	A351 Gr. CF8
7B	Gland	A276 Type 304
8	Gland packing	Flexible graphite
16A	Name plate	Aluminum
16B	Washer	Carbon steel
19	Gasket	Flexible graphite
20	Packing washer	A276 Type 316
30	Ball seat	A276 Type 316 + Ni-Cr Alloy
33	Cup nut	A194 Gr. 8
34A	Grand nut	A194 Gr. 8
34B	Nut	A194 Gr. 8
35	Cap bolt	A193 Gr. B8
36	Gland bolt	A193 Gr. B8
47	Thrust washer	Carbon
67	Stem bearing	Carbon
92	Connector	Carbon steel
93	Bracket	Ductile iron
99	Bolt	Carbon steel
102	Gear unit	
143	Seat spring	A276 Type 316
176	Seat gasket	Flexible graphite
216	Pressure direction plate	A276 Type 304

*1 Equivalent to ASTM A564 TYPE 630
*2 Cr. plating

Dimensions:G-300UTB5H（M）

Unit: mm

Nominal size		d	H	D1	L	End flange								A	B
						D	Bolt hole			Bolt size	g	t	f		
in.	mm						C	NO.	h						
4	100	100	292	310	305	254	200.0	8	22	3/4	157	31.8	1.6	65.5	165
6	150	150	374	360	403	318	270.0	12	22	3/4	216	36.6	1.6	88.5	210
8	200	200	409	500	502	381	330.0	12	22	7/8	270	41.3	1.6	134	377

Note: (1) Please install valve so that the arrow indicated should be in the above direction.

Dimensions:G-20UTB5H（M）

Unit: mm

Nominal size		d	H	D1	L	End flange								A	B
						D	Bolt hole			Bolt size	g	t	f		
mm	in.						C	NO.	h						
100	4	100	292	310	305	225	185	8	23	M20	160	31.8	2	65.5	165
150	6	150	374	360	403	305	260	12	25	M22	230	36.6	2	88.5	210
200	8	200	409	500	502	350	305	12	25	M22	275	41.3	2	134	377

Note: (1) " t " shall be in accordance with ASME B16.5 class 300. (2) Please install valve so that the arrow indicated should be in the above direction.

●Metal seated ball valve（Trim 5H）

300／20SCTB5H

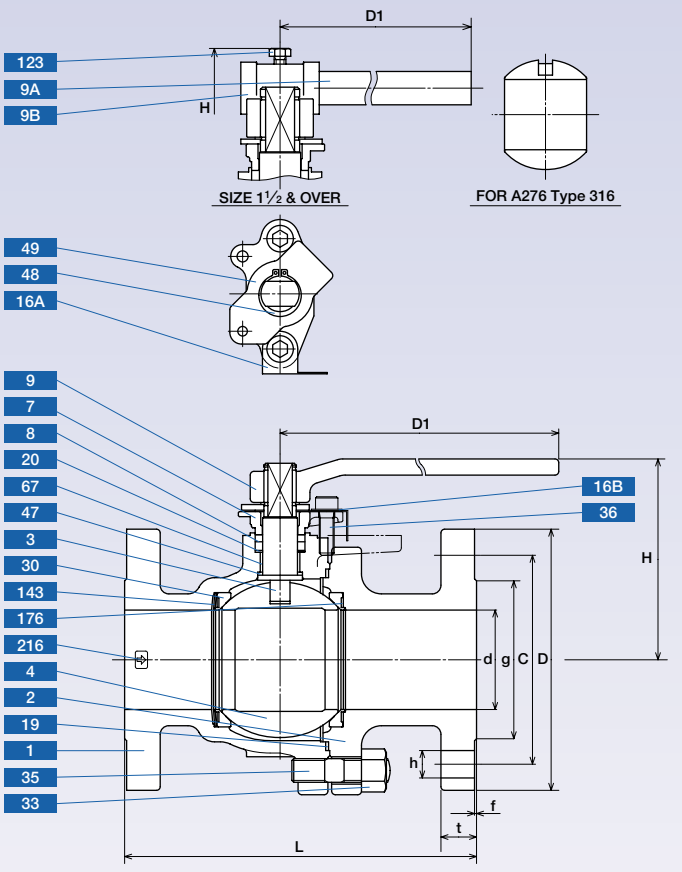

Construction and materials

No.	Parts	Specifications
		300SCTB5H
1	Body	A216 Gr. WCB
2	Body cap	A216 Gr. WCB
3	Stem	JIS SUS630*1
4	Ball	A351 Gr. CF8M*2 or A276 Type 316*2
7	Gland	A351 Gr. CF8
8	Gland packing	Flexible graphite
9	Handle	Ductile iron
9A	Handle bar	Carbon steel (size 1½ & over)
9B	Handle head	Ductile iron (size 1½ & over)
16A	Name plate	Aluminum
16B	Washer	Carbon steel
19	Gasket	Flexible graphite
20	Packing washer	A276 Type 316
30	Ball seat	A276 Type 316 + Ni-Cr Alloy
33	Cup nut	A194 Gr. 2H
35	Cap bolt	A193 Gr. B7
36	Gland ball	A193 Gr. B8
47	Thrust washer	Carbon
48	Snap ring	Carbon steel
49	Stopper	A276 Type 304
67	Stem bearing	Carbon
123	Handle bolt	Carbon steel (size 1½ & over)
143	Seat spring	A276 Type 316
176	Seat gasket	Flexible graphite
216	Pressure direction plate	A276 Type 304

*1 Equivalent to ASTM A564 TYPE 630
*2 Cr. plating

Dimensions:300SCTB5H

Unit: mm

Nominal size		d	H	D1	L	End flange							
						D	Bolt hole			Bolt size	g	t	f
in.	mm						C	NO.	h				
1/2	15	15	102	130	140	95	66.5	4	16	1/2	35	14.3	1.6
3/4	20	20	105	130	152	117	82.5	4	19	5/8	43	15.9	1.6
1	25	25	124	160	165	124	89.0	4	19	5/8	51	17.5	1.6
1 1/2	40	40	136	600	190	156	114.5	4	22	3/4	73	20.7	1.6
2	50	50	141	600	216	165	127.0	8	19	5/8	92	22.3	1.6
2 1/2	65	65	187	1000	241	190	149.0	8	22	3/4	105	25.4	1.6
3	80	80	197	1000	283	210	168.0	8	22	3/4	127	28.6	1.6

Note: (1) Please install valve so that the arrow indicated should be in the above direction.

Dimensions:20SCTB5H

Unit: mm

Nominal size		d	H	D1	L	End flange							
						D	Bolt hole			Bolt size	g	t	f
mm	in.						C	NO.	h				
15	1/2	15	102	130	140	95	70	4	15	M12	51	14.3	1
20	3/4	20	105	130	152	100	75	4	15	M12	56	16	1
25	1	25	124	160	165	125	90	4	19	M16	67	17.5	1
40	1 1/2	40	136	600	190	140	105	4	19	M16	81	20.7	2
50	2	50	141	600	216	155	120	8	19	M16	96	22.3	2
65	2 1/2	65	187	1000	241	175	140	8	19	M16	116	25.4	2
80	3	80	197	1000	283	200	160	8	23	M20	132	28.6	2

Note: (1) " t " shall be in accordance with ANSI B16.5 class 300, except for size 20. (2) Please install valve so that the arrow indicated should be in the above direction.

●Metal seated ball valve（Trim 5H）

G-300／20SCTB5H

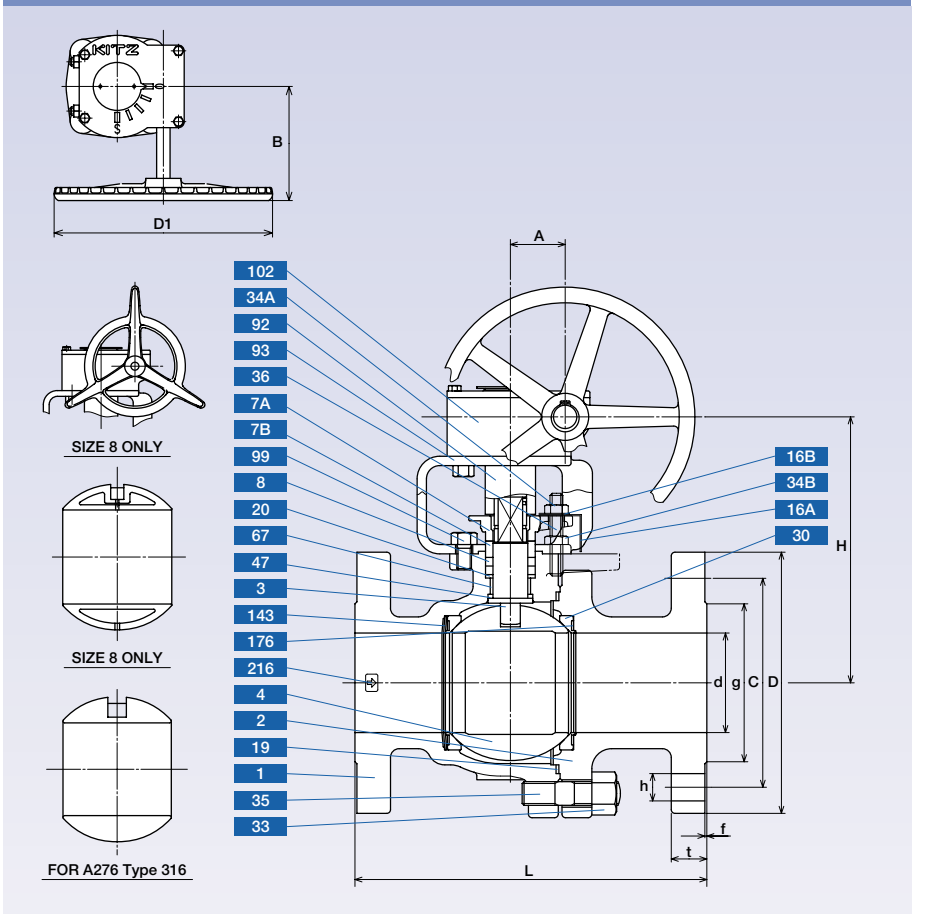

Construction and materials

No.	Parts	Specifications
		G-300SCTB5H
1	Body	A216 Gr. WCB
2	Body cap	A216 Gr. WCB
3	Stem	JIS SUS630*1
4	Ball	A351 Gr. CF8M*2 or A276 Type 316*2
7A	Gland	A351 Gr. CF8
7B	Gland	A276 Type 304
8	Gland packing	Flexible graphite
16A	Name plate	Aluminum
16B	Washer	Carbon steel
19	Gasket	Flexible graphite
20	Packing washer	A276 Type 316
30	Ball seat	A276 Type 316 + Ni-Cr Alloy
33	Cup nut	A194 Gr. 2H
34A	Grand nut	A193 Gr. 8
34B	Nut	A193 Gr. 8
35	Cap bolt	A193 Gr. B7
36	Gland bolt	A193 Gr. B8
47	Thrust washer	Carbon
92	Connector	Carbon steel
93	Bracket	Ductile iron
99	Bolt	Carbon steel
102	Gear unit	
143	Seat spring	A276 Type 316
176	Seat gasket	Flexible graphite
216	Pressure direction plate	A276 Type 304

*1 Equivalent to ASTM A564 TYPE 630
*2 Cr. plating

Dimensions:G-300SCTB5H

Unit: mm

Nominal size		d	H	D1	L	End flange								A	B
						D	Bolt hole			Bolt size	g	t	f		
in.	mm						C	NO.	h						
4	100	100	292	310	305	254	200.0	8	22	3/4	157	31.8	1.6	65.5	165
6	150	150	374	360	403	318	270.0	12	22	3/4	216	36.6	1.6	88.5	210
8	200	200	409	500	502	381	330.0	12	25	7/8	270	41.3	1.6	134	377

Note: (1) Please install valve so that the arrow indicated should be in the above direction.

Dimensions:G-20SCTB5H

Unit: mm

Nominal size		d	H	D1	L	End flange								A	B
						D	Bolt hole			Bolt size	g	t	f		
mm	in.						C	NO.	h						
100	4	100	292	310	305	225	185	8	23	M20	160	31.8	2	65.5	165
125	5	125	332	360	381	270	225	8	25	M22	195	26	2	88.5	210
150	6	150	374	360	403	305	260	12	25	M22	230	36.6	2	88.5	210
200	8	200	409	500	502	350	305	12	25	M22	275	41.3	2	134	377

Note: (1) " t " shall be in accordance with ASME B16.5 class 300, except for size 125. (2) Please install valve so that the arrow indicated should be in the above direction.

●Metal seated ball valve（Trim 6H）

150／10UTB6H（M）

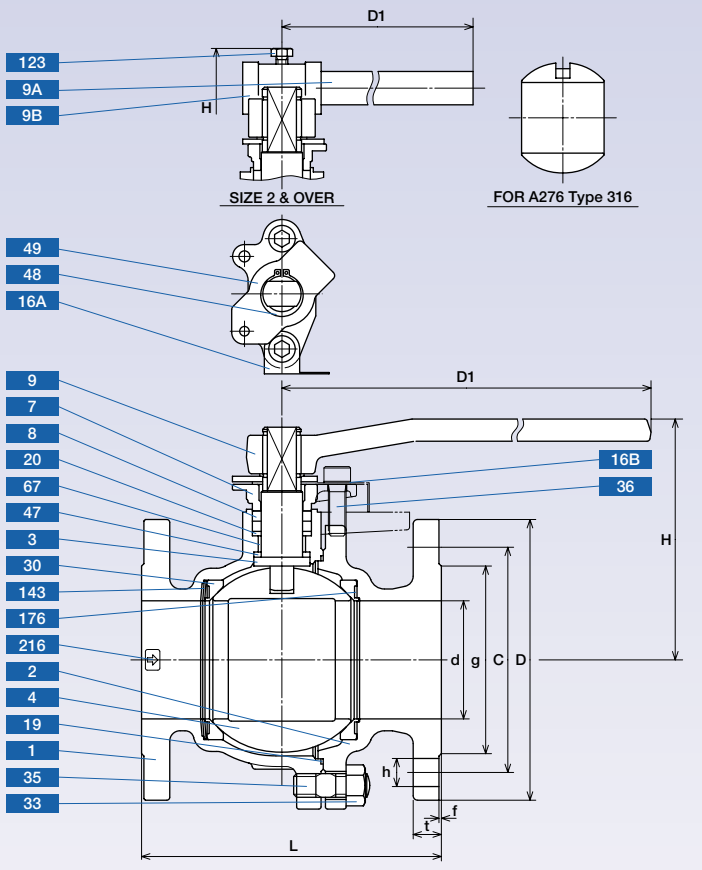

Construction and materials

No.	Parts	Specifications
		150UTB6H
1	Body	A351 Gr. CF8
2	Body cap	A351 Gr. CF8
3	Stem	JIS SUS630*1
4	Ball	A351 Gr. CF8M + Cr-Ni Alloy or A276 Type 316 + Cr-Ni Alloy
7	Gland	A351 Gr. CF8
8	Gland packing	Flexible graphite
9	Handle	Ductile iron
9A	Handle bar	Carbon steel (size 2 & over)
9B	Handle head	Ductile iron (size 2 & over)
16A	Name plate	Aluminum
16B	Washer	Carbon steel
19	Gasket	Flexible graphite
20	Packing washer	A276 Type 316
30	Ball seat	A276 Type 316 + Cr-Ni Alloy
33	Cup nut	A194 Gr. 8
35	Cap bolt	A193 Gr. B8
36	Gland bolt	A193 Gr. B8
47	Thrust washer	Carbon
48	Snap ring	A276 Type 304
49	Stopper	A276 Type 304
67	Stem brearing	Carbon
123	Handle bolt	Carbon steel (size 2 & over)
143	Seat spring	INCONEL® X-750
176	Seat gasket	Flexible graphite
216	Pressure direction plate	A276 Type 304

*1 Equivalent to ASTM A564 TYPE 630

Dimensions:150UTB6H（M）

Unit: mm

Nominal size		d	H	D1	L	End flange							
						D	Bolt hole			Bolt size	g	t	f
in.	mm						C	NO.	h				
1/2	15	15	102	130	108	89	60.5	4	16	1/2	35	11.2	1.6
3/4	20	20	105	130	117	98	70.0	4	16	1/2	43	11.2	1.6
1	25	25	124	160	127	108	79.5	4	16	1/2	51	11.2	1.6
1 1/2	40	40	115	230	165	127	98.5	4	16	1/2	73	14.3	1.6
2	50	50	141	300	178	152	120.5	4	19	5/8	92	15.9	1.6
2 1/2	65	65	188	600	190	178	139.5	4	19	5/8	105	17.5	1.6
3	80	80	197	600	203	190	152.5	4	19	5/8	127	19.1	1.6
4	100	100	242	1000	229	229	190.5	8	19	5/8	157	23.9	1.6

Note:（1）Please install valve so that the arrow indicated should be in the above direction.

Dimensions:10UTB6H（M）

Unit: mm

Nominal size		d	H	D1	L	End flange							
						D	Bolt hole			Bolt size	g	t	f
mm	in.						C	NO.	h				
15	1/2	15	102	130	110	95	70	4	15	M12	51	12	1
20	3/4	20	105	130	120	100	75	4	15	M12	56	14	1
25	1	25	124	160	130	125	90	4	19	M16	67	14	1
32	1 1/4	32	130	160	140	135	100	4	19	M16	76	16	2
40	1 1/2	40	115	230	165	140	105	4	19	M16	81	16	2
50	2	50	141	300	180	155	120	4	19	M16	96	16	2
65	2 1/2	65	188	600	190	175	140	4	19	M16	116	18	2
80	3	80	197	600	200	185	150	8	19	M16	126	18	2
100	4	100	242	1000	230	210	175	8	19	M16	151	18	2

Note:（1）Please install valve so that the arrow indicated should be in the above direction.

●Metal seated ball valve（Trim 6H）

G-150／10UTB6H（M）

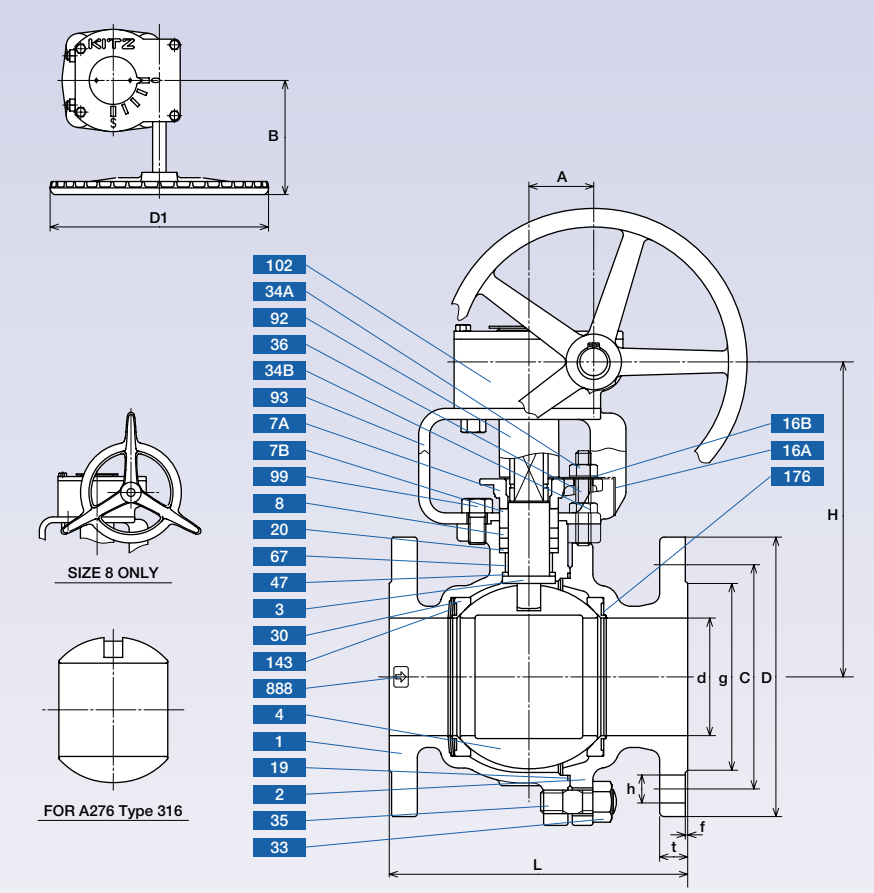

Construction and materials

No.	Parts	Specifications
		G-150UTB6H
1	Body	A351 Gr. CF8
2	Body cap	A351 Gr. CF8
3	Stem	JIS SUS630*1
4	Ball	A351 Gr. CF8M + Ni-Cr Alloy or A276 Type 316 + Ni-Cr Alloy
7A	Gland	A351 Gr. CF8
7B	Gland	A276 Type 304
8	Gland packing	Flexible graphite
16A	Name plate	Aluminum
16B	Washer	Carbon steel
19	Gasket	Flexible graphite
20	Packing washer	A276 Type 316
30	Ball seat	A276 Type 316 + Ni-Cr Alloy
33	Cup nut	A194 Gr. 8
34A	Grand nut	A194 Gr. 8
34B	Nut	A294 Gr. 8
35	Cap bolt	A193 Gr. B8
36	Gland bolt	A193 Gr. B8
47	Thrust washer	Carbon
67	Stem bearing	Carbon
92	Connector	Carbon steel
93	Bracket	Ductile iron
99	Bolt	Carbon steel
102	Gear unit	
143	Seat spring	INCONEL® X-750
176	Seat gasket	Flexible graphite
216	Pressure direction plate	A276 Type 304

*1 Equivalent to ASTM A564 TYPE 630

Dimensions:G-150UTB6H（M）

Unit: mm

Nominal size		d	H	D1	L	End flange								A	B
						D	Bolt hole			Bolt size	g	t	f		
in.	mm						C	NO.	h						
5	125	125	332	360	356	254	216.0	8	22	3/4	186	23.9	1.6	88.5	210
6	150	150	374	360	394	279	241.5	8	22	3/4	216	25.4	1.6	88.5	210
8	200	200	409	500	457	343	298.5	8	22	3/4	270	28.6	1.6	134	377

Note:（1）Please install valve so that the arrow indicated should be in the above direction.

Dimensions:G-10UTB6H（M）

Unit: mm

Nominal size		d	H	D1	L	End flange								A	B
						D	Bolt hole			Bolt size	g	t	f		
mm	in.						C	NO.	h						
125	5	125	332	360	300	250	210	8	23	M20	182	20	2	88.5	210
150	6	150	374	360	340	280	240	8	23	M20	212	22	2	88.5	210
200	8	200	409	500	450	330	290	12	23	M20	262	22	2	134	377

Note:（1）Please install valve so that the arrow indicated should be in the above direction.

●Metal seated ball valve（Trim 6H）

150／10SCTB6H

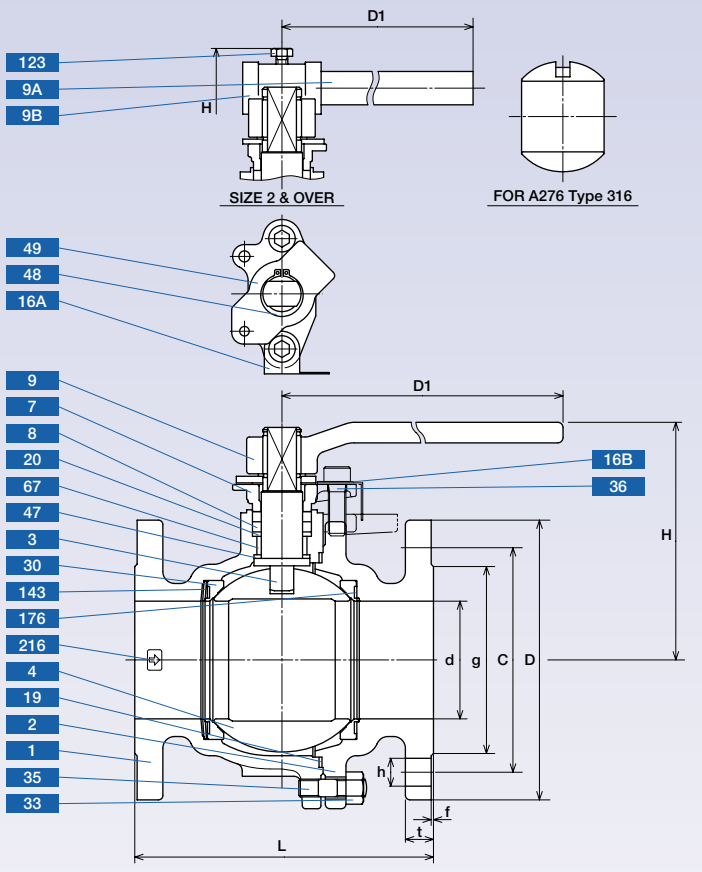

Construction and materials

No.	Parts	Specifications
		150SCTB6H
1	Body	A216 Gr. WCB
2	Body cap	A216 Gr. WCB
3	Stem	JIS SUS630*1
4	Ball	A351 Gr. CF8M + Ni-Cr Alloy or A276 Type 316 + Ni-Cr Alloy
7	Gland	A351 Gr. CF8
8	Gland packing	Flexible graphite
9	Handle	Ductile iron (size 1½)
9A	Handle bar	Carbon steel (size 2 & over)
9B	Handle head	Ductile iron (size 2 & over)
16A	Name plate	Aluminum
16B	Washer	Carbon steel
19	Gasket	Flexible graphite
20	Packing washer	A276 Type 316
30	Ball seat	A276 Type 316 + Ni-Cr Alloy
33	Cup nut	A194 Gr. 2H
35	Cap bolt	A193 Gr. B7
36	Gland bolt	A193 Gr. B8
47	Thrust washer	Carbon
48	Snap ring	Carbon steel
49	Stopper	A276 Type 304
67	Stem bearing	Carbon
123	Handle bolt	Carbon steel (size 2 & over)
143	Seat spring	INCONEL® X-750
145	Spring washer	Stainless steel (size 1½ & over)
176	Seat gasket	Flexible graphite
216	Pressure direction plate	A276 Type 304

*1 Equivalent to ASTM A564 TYPE 630

Dimensions:150SCTB6H

Unit: mm

Nominal size		d	H	D1	L	End flange							
						D	Bolt hole			Bolt size	g	t	f
in.	mm						C	NO.	h				
1/2	15	15	102	130	108	89	60.5	4	16	1/2	35	11.2	1.6
3/4	20	20	105	130	117	98	70.0	4	16	1/2	43	11.2	1.6
1	25	25	124	160	127	108	79.5	4	16	1/2	51	11.2	1.6
1 1/2	40	40	115	230	165	127	98.5	4	16	1/2	73	14.3	1.6
2	50	50	141	300	178	152	120.5	4	19	5/8	92	15.9	1.6
2 1/2	65	65	187	600	190	178	139.5	4	19	5/8	105	17.5	1.6
3	80	80	197	600	203	190	152.5	4	19	5/8	127	19.1	1.6
4	100	100	242	1000	229	229	190.5	8	19	5/8	157	23.9	1.6

Note: (1) Please install valve so that the arrow indicated should be in the above direction.

Dimensions:10SCTB6H

Unit: mm

Nominal size		d	H	D1	L	End flange							
						D	Bolt hole			Bolt size	g	t	f
mm	in.						C	NO.	h				
15	1/2	15	102	130	108	95	70	4	15	M12	51	12	1
20	3/4	20	105	130	117	100	75	4	15	M12	56	14	1
25	1	25	124	160	127	125	90	4	19	M16	67	14	1
40	1 1/2	40	115	230	165	140	105	4	19	M16	81	16	2
50	2	50	141	300	178	155	120	4	19	M16	96	16	2
65	2 1/2	65	187	600	190	175	140	4	19	M16	116	18	2
80	3	80	197	600	203	185	150	8	19	M16	126	19.1	2
100	4	100	242	1000	229	210	175	8	19	M16	151	23.9	2

Note: (1) Please install valve so that the arrow indicated should be in the above direction. (2) " t " shall be in accordance with ANSI B16.5 class 150, except for size 15-65.

●Metal seated ball valve（Trim 6H）

G-150／10SCTB6H

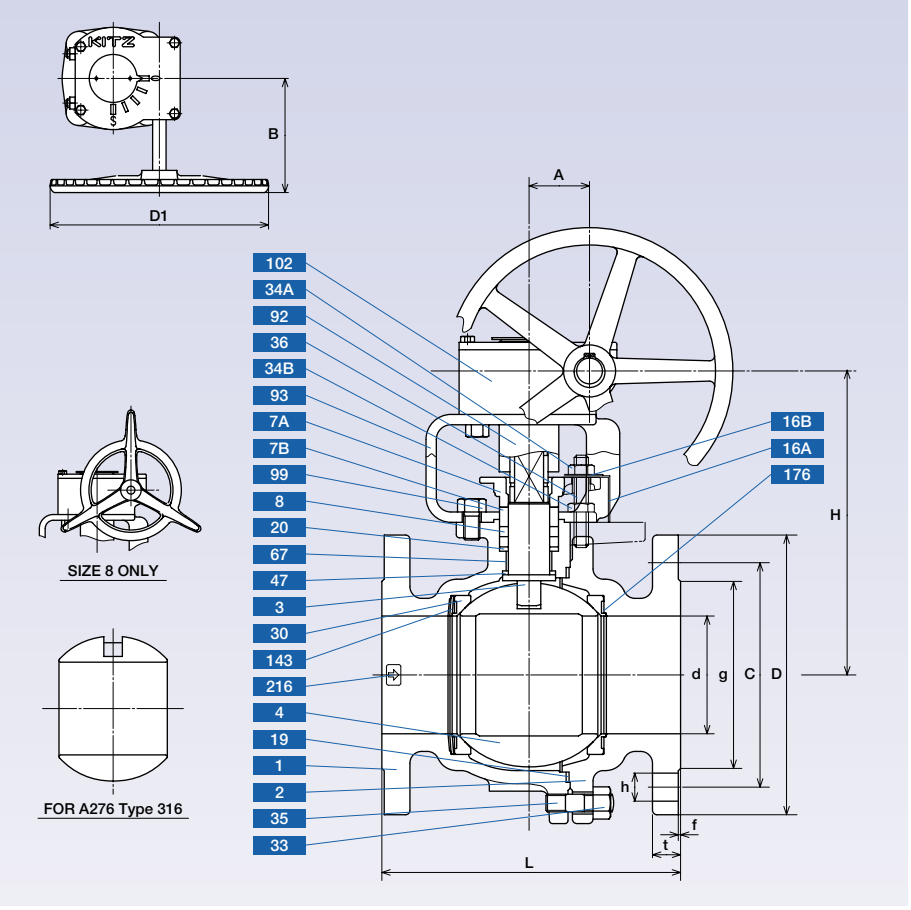

Construction and materials

No.	Parts	Specifications
		G-150SCTB6H
1	Body	A216 Gr. WCB
2	Body cap	A216 Gr. WCB
3	Stem	JIS SUS630*1
4	Ball	A351 Gr. CF8M + Ni-Cr Alloy or A276 Type 316 + Ni-Cr Alloy
7A	Gland	A351 Gr. CF8
7B	Gland	A279 Type 304
8	Gland packing	Flexible graphite
16A	Name plate	Aluminum
16B	Washer	Carbon steel
19	Gasket	Flexible graphite
20	Packing washer	A276 Type 316
30	Ball seat	A276 Type 316 + Ni-Cr Alloy
33	Cup nut	A194 Gr. 2H
34A	Grand nut	A194 Gr. 8
34B	Nut	A194 Gr. 8
35	Cap bolt	A193 Gr. B7
36	Gland bolt	A193 Gr. B8
47	Thrust washer	Carbon
67	Stem bearing	Carbon
92	Connector	Carbon steel
93	Bracket	Ductile iron
99	Bolt	Carbon steel
102	Gear unit	
143	Seat spring	INCONEL® X-750
176	Seat gasket	Flexible graphite
216	Pressure direction plate	A276 Type 304

*1 Equivalent to ASTM A564 TYPE 630

Dimensions:G-150SCTB6H

Unit: mm

Nominal size		d	H	D1	L	End flange								A	B
						D	Bolt hole			Bolt size	g	t	f		
in.	mm						C	NO.	h						
6	150	150	374	360	394	279	241.5	8	22	3/4	216	25.4	1.6	88.5	210
8	200	200	409	500	457	343	298.5	8	22	3/4	270	28.6	1.6	134	377

Note: (1) Please install valve so that the arrow indicated should be in the above direction.

Dimensions:G-10SCTB6H

Unit: mm

Nominal size		d	H	D1	L	End flange								A	B
						D	Bolt hole			Bolt size	g	t	f		
mm	in.						C	NO.	h						
125	5	125	332	360	356	250	210	8	23	M20	182	23.9	2	88.5	210
150	6	150	374	360	394	280	240	8	23	M20	212	25.4	2	88.5	210
200	8	200	409	500	457	330	290	12	23	M20	262	28.6	2	134	377

Note: (1) " t " shall be in accordance with ANSI B16.5 class 150. (2) Please install valve so that the arrow indicated should be in the above direction.

●Metal seated ball valve（Trim 6H）

300／20UTB6H（M）

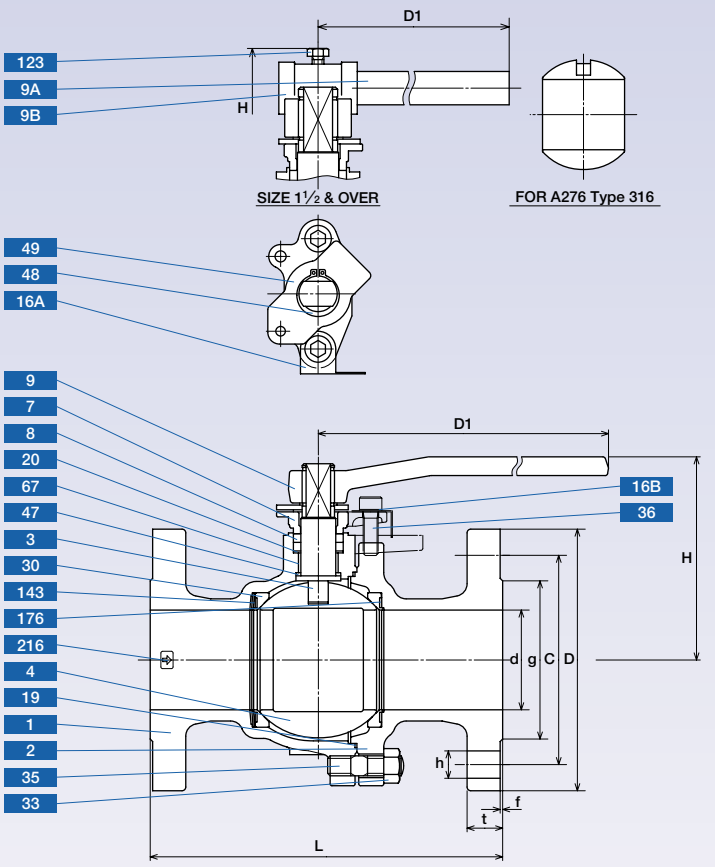

Construction and materials

No.	Parts	Specifications
		300UTB6H
1	Body	A351 Gr. CF8
2	Body cap	A351 Gr. CF8
3	Stem	JIS SUS630*1
4	Ball	A351 Gr. CF8M + Ni-Cr Alloy or A276 Type 316 + Ni-Cr Alloy
7	Gland	A351 Gr. CF8
8	Gland packing	Flexible graphite
9	Handle	Stainless steel
9A	Handle bar	Carbon steel (size 1½ & over)
9B	Handle head	Ductile iron (size 1½ & over)
16A	Name plate	Aluminum
16B	Washer	Carbon steel
19	Gasket	Flexible graphite
20	Packing washer	A276 Type 316
30	Ball seat	A276 Type 316 + Ni-Cr Alloy
33	Cup nut	A194 Gr. 8
35	Cap bolt	A193 Gr. B8
36	Gland bolt	A193 Gr. B8
47	Thrust washer	Carbon
48	Snap ring	A276 Type 304
49	Stopper	A276 Type 304
67	Stem bearing	Carbon
123	Spring washer	Carbon steel (size 1½ & over)
143	Seat spring	INCONEL® X-750
176	Seat gasket	Flexible graphite
216	Pressure direction plate	A276 Type 304

*1 Equivalent to ASTM A564 TYPE 630

Dimensions:300UTB6H（M）

Unit: mm

Nominal size		d	H	D1	L	End flange							
						D	Bolt hole			Bolt size	g	t	f
in.	mm						C	NO.	h				
1/2	15	15	102	130	140	95	66.5	4	16	1/2	35	14.3	1.6
3/4	20	20	105	130	152	117	82.5	4	19	5/8	43	15.9	1.6
1	25	25	124	160	165	124	89.0	4	19	5/8	51	17.5	1.6
1 1/2	40	40	136	600	190	156	114.5	4	22	3/4	73	20.7	1.6
2	50	50	141	600	216	165	127.0	8	19	5/8	92	22.3	1.6
3	80	80	197	1000	283	210	168.0	8	22	3/4	127	28.6	1.6

Note:（1）Please install valve so that the arrow indicated should be in the above direction.

Dimensions:20UTB6H（M）

Unit: mm

Nominal size		d	H	D1	L	End flange							
						D	Bolt hole			Bolt size	g	t	f
mm	in.						C	NO.	h				
15	1/2	15	102	130	140	95	70	4	15	M12	51	14.3	1
20	3/4	20	105	130	152	100	75	4	15	M12	56	16	1
25	1	25	124	160	165	125	90	4	19	M16	67	17.5	1
40	1 1/2	40	136	600	190	140	105	4	19	M16	81	20.7	2
50	2	50	141	600	216	155	120	8	19	M16	96	22.3	2
80	3	80	197	1000	283	200	160	8	23	M20	132	28.6	2

Note:（1）Please install valve so that the arrow indicated should be in the above direction.（2）" t " shall be in accordance with ASME B16.5 class 300, except for size 20.

●Metal seated ball valves（Trim 6H）

G-300／20UTB6H（M）

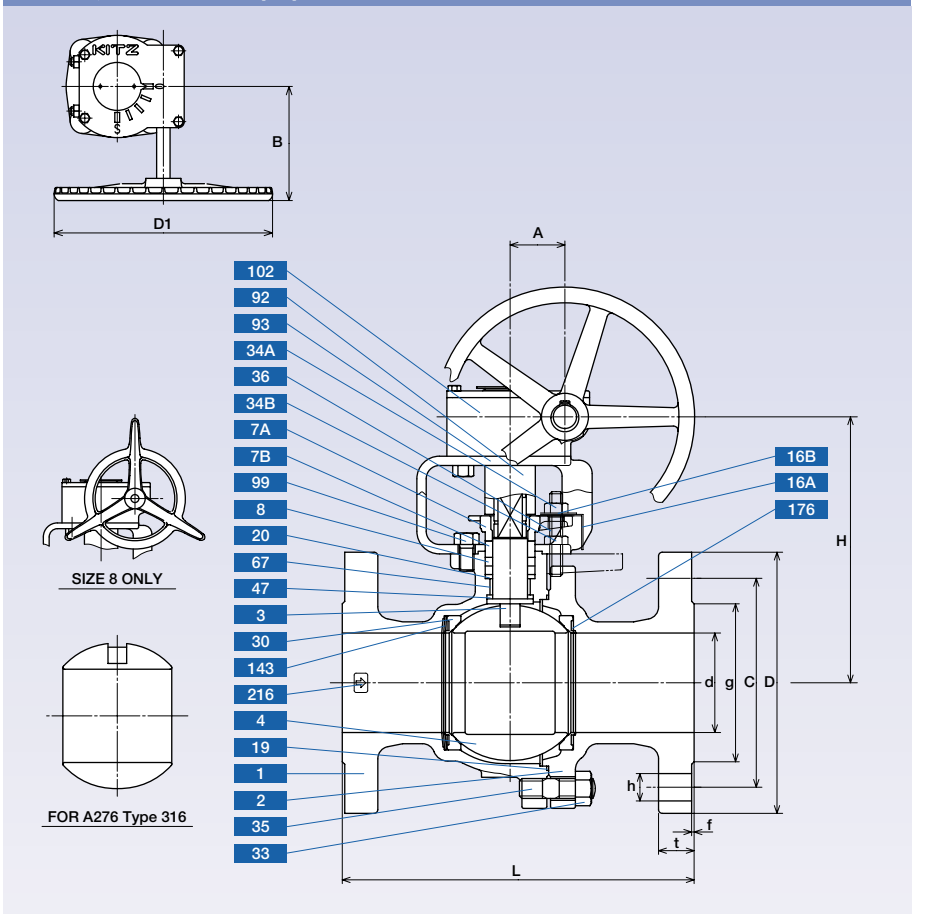

Construction and materials

No.	Parts	Specifications
		G-300UTB6H
1	Body	A351 Gr. CF8
2	Body cap	A351 Gr. CF8
3	Stem	JIS SUS630*1
4	Ball	A351 Gr. CF8M + Ni-Cr Alloy or A276 Type 316 + Ni-Cr Alloy
7A	Gland	A351 Gr. CF8
7B	Gland	A276 Type 304
8	Gland packing	Flexible graphite
16A	Name plate	Aluminum
16B	Washer	Carbon steel
19	Gasket	Flexible graphite
20	Packing washer	A276 Type 316
30	Ball seat	A276 Type 316 + Ni-Cr Alloy
33	Cup nut	A194 Gr. 8
34A	Grand nut	A194 Gr. 8
34B	Nut	A194 Gr. 8
35	Cap bolt	A193 Gr. B8
36	Gland bolt	A193 Gr. B8
47	Thrust washer	Carbon
67	Stem bearing	Carbon
93	Bracket	Ductile iron
99	Bolt	Carbon steel
102	Gear unit	
143	Seat spring	INCONEL® X-750
176	Seat gasket	Flexible graphite
216	Pressure direction plate	A276 Type 304

*1 Equivalent to ASTM A564 TYPE 630

Dimensions:G-300UTB6H（M）

Unit: mm

Nominal size		d	H	D1	L	End flange								A	B
						D	Bolt hole			Bolt size	g	t	f		
in.	mm						C	NO.	h						
4	100	100	292	310	305	254	200.0	8	22	3/4	157	31.8	1.6	65.5	165
6	150	150	374	360	403	318	270.0	12	22	3/4	216	36.6	1.6	88.5	210
8	200	200	409	500	502	381	330.0	12	22	7/8	270	41.3	1.6	134	377

Note: (1) Please install valve so that the arrow indicated should be in the above direction.

Dimensions:G-20UTB6H（M）

Unit: mm

Nominal size		d	H	D1	L	End flange								A	B
						D	Bolt hole			Bolt size	g	t	f		
mm	in.						C	NO.	h						
100	4	100	292	310	305	225	185	8	23	M20	160	31.8	2	65.5	165
150	6	150	374	360	403	305	260	12	25	M22	230	36.6	2	88.5	210
200	8	200	409	500	502	350	305	12	25	M22	275	41.3	2	134	377

Note: (1) " t " shall be in accordance with ASME B16.5 class 300. (2) Please install valve so that the arrow indicated should be in the above direction.

●Metal seated ball valve（Trim 6H）

300／20SCTB6H

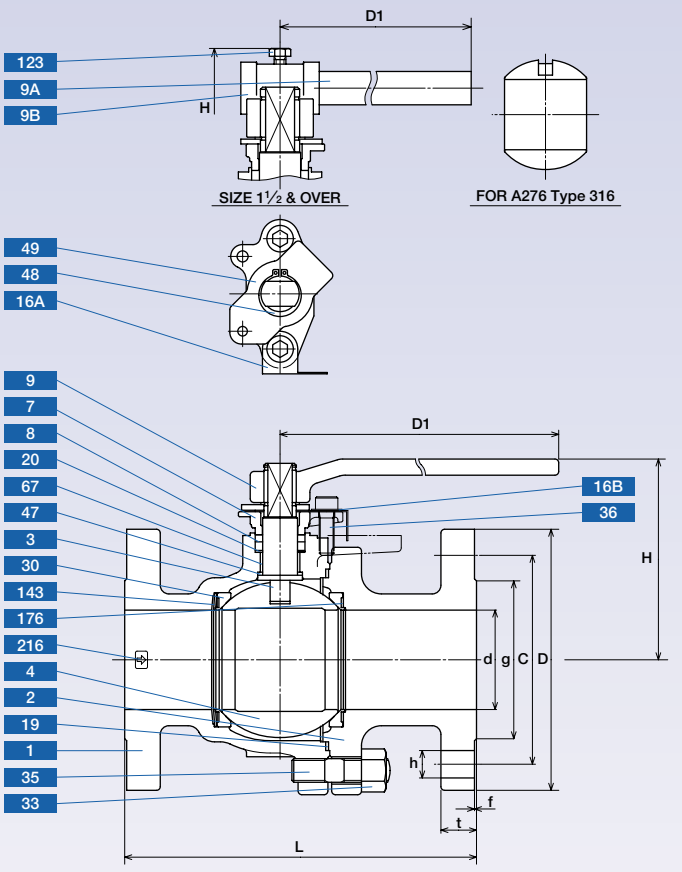

Construction and materials

No.	Parts	Specifications
		300SCTB6H
1	Body	A216 Gr. WCB
2	Body cap	A216 Gr. WCB
3	Stem	JIS SUS630*1
4	Ball	A351 Gr. CF8M + Ni-Cr Alloy or A276 Type 316 + Ni-Cr Alloy
7	Gland	A351 Gr. CF8
8	Gland packing	Flexible graphite
9	Handle	Ductile iron
9A	Handle bar	Carbon steel (size 1½ & over)
9B	Handle head	Ductile iron (size 1½ & over)
16A	Name plate	Aluminum
16B	Washer	Carbon steel
19	Gasket	Flexible graphite
20	Packing washer	Carbon
30	Ball seat	A276 Type 316 + Ni-Cr Alloy
33	Cup nut	A194 Gr. 2H
35	Cap bolt	A193 Gr. B7
36	Gland bolt	A193 Gr. B8
47	Thrust washer	Carbon
48	Snap ring	Carbon steel
49	Stopper	A276 Type 304
67	Stem bearing	Carbon
123	Handle bolt	Carbon steel (size 1½ & over)
143	Seat spring	INCONEL® X-750
176	Seat gasket	Flexible graphite
216	Pressure direction plate	A276 Type 304

*1 Equivalent to ASTM A564 TYPE 630

Dimensions:300SCTB6H

Unit: mm

Nominal size		d	H	D1	L	End flange							
						D	Bolt hole			Bolt size	g	t	f
in.	mm						C	NO.	h				
1/2	15	15	102	130	140	95	66.5	4	16	1/2	35	14.3	1.6
3/4	20	20	105	130	152	117	82.5	4	19	5/8	43	15.9	1.6
1	25	25	124	160	165	124	89.0	4	19	5/8	51	17.5	1.6
1 1/2	40	40	136	600	190	156	114.5	4	22	3/4	73	20.7	1.6
2	50	50	141	600	216	165	127.0	8	19	5/8	92	22.3	1.6
2 1/2	65	65	187	1000	241	190	149.0	8	22	3/4	105	25.4	1.6
3	80	80	197	1000	283	210	168.0	8	22	3/4	127	28.6	1.6

Note: (1) Please install valve so that the arrow indicated should be in the above direction.

Dimensions:20SCTB6H

Unit: mm

Nominal size		d	H	D1	L	End flange							
						D	Bolt hole			Bolt size	g	t	f
mm	in.						C	NO.	h				
15	1/2	15	102	130	140	95	70	4	15	M12	51	14.3	1
20	3/4	20	105	130	152	100	75	4	15	M12	56	16	1
25	1	25	124	160	165	125	90	4	19	M16	67	17.5	1
40	1 1/2	40	136	600	190	140	105	4	19	M16	81	20.7	2
50	2	50	141	600	216	155	120	8	19	M16	96	22.3	2
65	2 1/2	65	187	1000	241	175	140	8	19	M16	116	25.4	2
80	3	80	197	1000	283	200	160	8	23	M20	132	28.6	2

Note: (1) " t " shall be in accordance with ANSI B16.5 class 300, except for size 20. (2) Please install valve so that the arrow indicated should be in the above direction.

●Metal seated ball valve（Trim 6H）

G-300／20SCTB6H

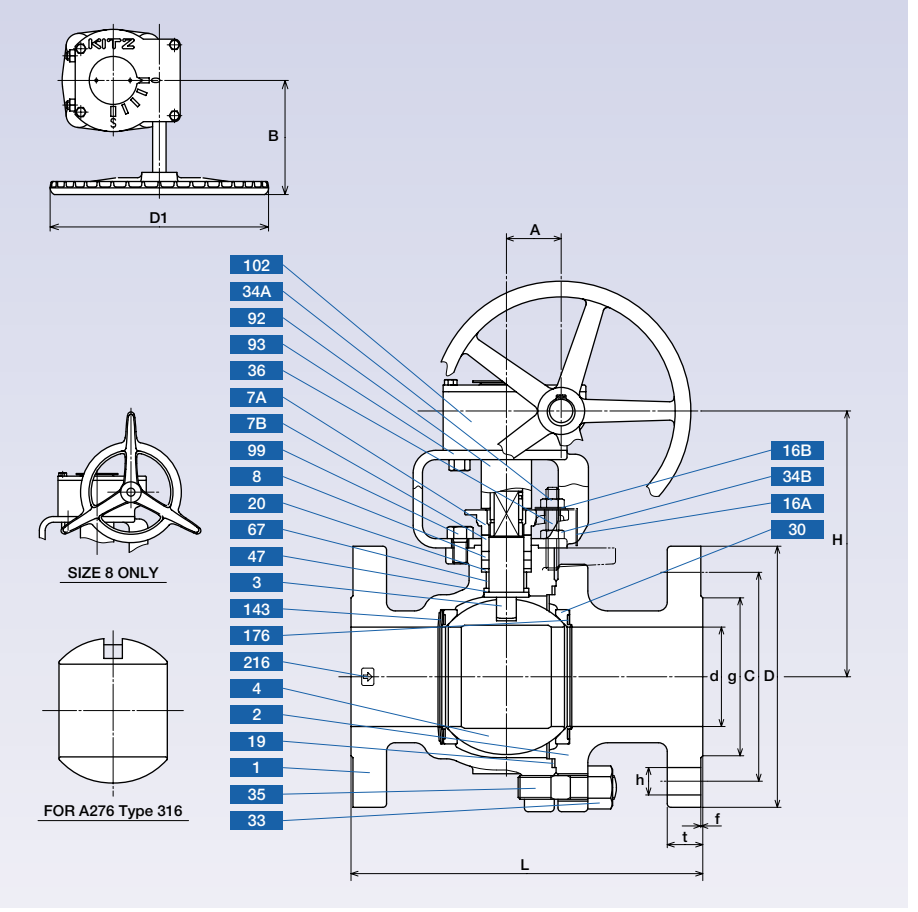

Construction and materials

No.	Parts	Specifications
		G-300SCTB6H
1	Body	A216 Gr. WCB
2	Body cap	A216 Gr. WCB
3	Stem	Stainless steel
4	Ball	A351 Gr. CF8M + Ni-Cr Alloy or A276 Type 316 + Ni-Cr Alloy
7A	Gland	A351 Gr. CF8
7B	Gland	A276 Type 304
8	Gland packing	Flexible graphite
16A	Name plate	Aluminum
16B	Washer	Carbon steel
19	Gasket	Flexible graphite
20	Packing washer	A276 Type 316
30	Ball seat	A276 Type 316 + Ni-Cr Alloy
33	Cup nut	A194 Gr. 2H
34A	Grand nut	A194 Gr. 8
34B	Nut	A194 Gr. 8
35	Cap bolt	A193 Gr. B7
36	Gland bolt	A193 Gr. B8
47	Thrust washer	Carbon
67	Stem bearing	Carbon
92	Connector	Carbon steel
93	Bracket	Ductile iron
99	Bolt	Carbon steel
102	Gear unit	
143	Seat spring	INCONEL® X-750
176	Seat gasket	Flexible graphite
216	Pressure direction plate	A276 Type 304

Dimensions:G-300SCTB6H

Unit: mm

Nominal size		d	H	D1	L	End flange								A	B
						D	Bolt hole			Bolt size	g	t	f		
in.	mm						C	NO.	h						
4	100	100	292	310	305	254	200.0	8	22	3/4	157	31.8	1.6	65.5	165
6	150	150	374	360	403	318	270.0	12	22	3/4	216	36.6	1.6	88.5	210
8	200	200	409	500	502	381	330.0	12	25	7/8	270	41.3	1.6	134	377

Note: (1) Please install valve so that the arrow indicated should be in the above direction.

Dimensions:G-20SCTB6H

Unit: mm

Nominal size		d	H	D1	L	End flange								A	B
						D	Bolt hole			Bolt size	g	t	f		
mm	in.						C	NO.	h						
100	4	100	292	310	305	225	185	8	23	M20	160	31.8	2	65.5	165
125	5	125	332	360	381	270	225	8	25	M22	195	26	2	88.5	210
150	6	150	374	360	403	305	260	12	25	M22	230	36.6	2	88.5	210
200	8	200	409	500	502	350	305	12	25	M22	275	41.3	2	134	377

Note: (1) " t " shall be in accordance with ASME B16.5 class 300, except for size 125. (2) Please install valve so that the arrow indicated should be in the above direction.

●Metal seated ball valve（Trim 6H）

G-150UTC6H（M）

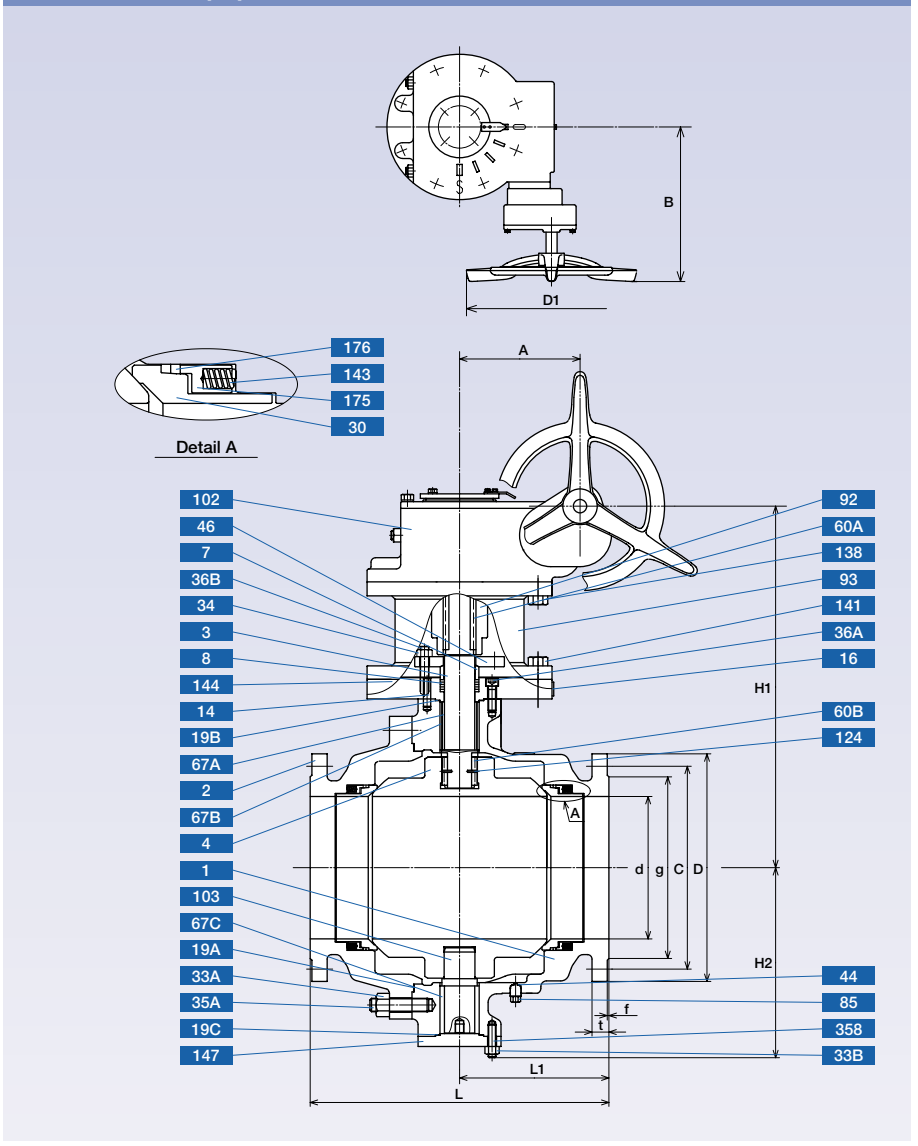

•Reduced bore is also available. : G-150UTCR6H(M)

Construction and materials

No.	Parts	Specifications
		G-150UTC6H
1	Body	A351 Gr. CF8
2	Body cap	A351 Gr. CF8
3	Stem	JIS SUS630*1
4	Ball	A276 Type 304 + SFNi*2
7	Gland	A276 Type 304
8	Gland packing	Flexible graphite
14	Set pin	A276 Type 304
16	Name plate	Stainless steel
19A	Gasket	Flexible graphite
19B	Gasket	Flexible graphite
19C	Gasket	Flexible graphite
30	Ball seat	A276 Type 316 + SFNi*2
33A	Cup nut	A194 Gr. 8
33B	Cover nut	A194 Gr. 8
34	Gland nut	A194 Gr. 8
35A	Cap bolt	A193 Gr. B8
35B	Cover bolt	A193 Gr. B8
36A	Gland bolt	A193 Gr. B8
36B	Gland bolt	A193 Gr. B8
44	Gasket	Flexible graphite
46	Flange	A276 Type 304
60A	Key	Alloy steel
60B	Key	JIS SUS630*1
67A	Stem bearing	A276 Type 316 + SFNi*2
67B	Stem bearing	A276 Type 316 + SFNi*2
67C	Stem bearing	A276 Type 316 + SFNi*2
85	Plug	A276 Type 304
92	Connector	Carbon steel
93	Bracket	Carbon steel
102	Gear unit	
103	Bottom stem	Stainless steel + SFNi*1
124	Spring pin	Stainless steel
138	Bolt	Carbon steel
141	Bolt	Carbon steel
143	Seat spring	INCONEL® X-750
144	Gland plate	A276 Type 304 + Co-Cr-W Alloy
147	End plate	A276 Type 304
175	Seat retainer	A276 Type 304
176	Retainer packing	Flexible graphite

*1 Equivalent to ASTM A564 TYPE 630
*2 Ni-Cr Alloy Thermal spraying

Dimensions:G-150UTC6H（M）

Unit: mm

Nominal size		d	H1	H2	D1	L	L1	End flange								A	B	Gear unit type & size
								D	Bolt hole			Bolt size	g	t	f			
in.	mm								C	NO.	h							
10	250	254	647	339	500	533	266.5	406	362.0	12	25	7/8	324	30.2	1.6	213	377	NO.7
12	300	305	722	385	500	610	305	483	432.0	12	25	7/8	381	31.8	1.6	213	377	NO.7
14	350	337	762	424	500	686	343	533	476.5	12	29	1	413	35.0	1.6	213	377	NO.7

●Metal seated ball valve（Trim 6H）

G-150／10SCTC6H

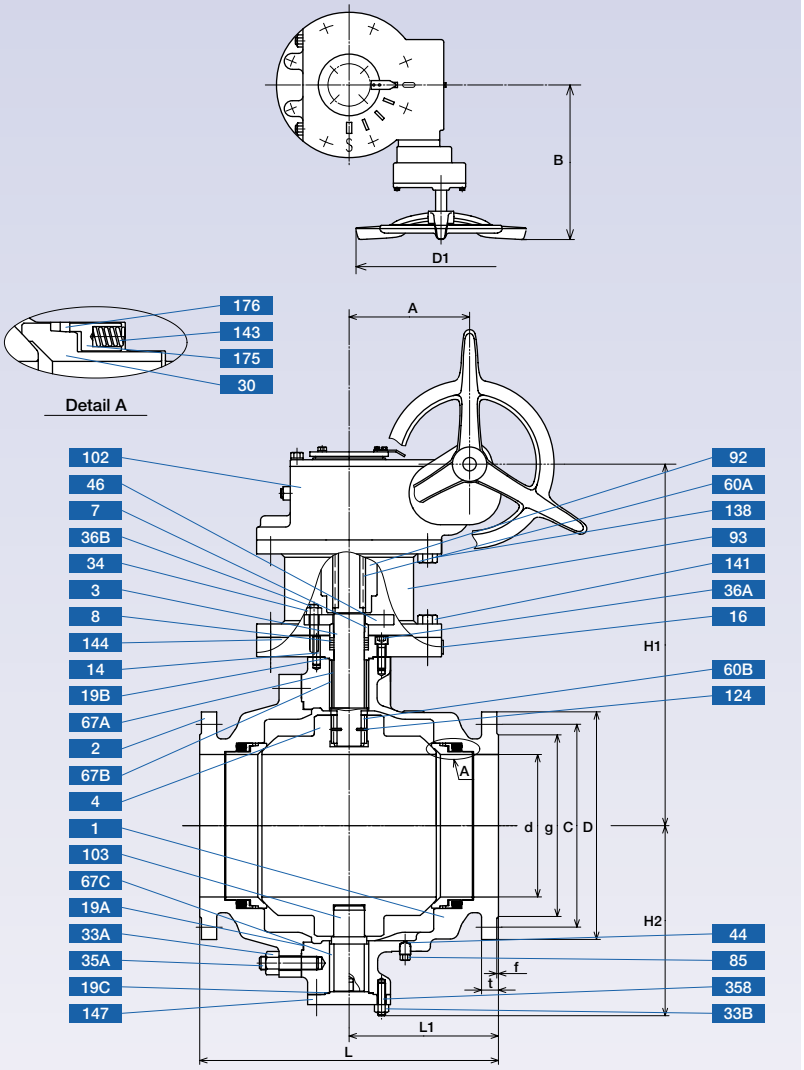

•Reduced bore is also available. : G-150SCTCR6H

Construction and materials

No.	Parts	Specifications
		G-150SCTC6HM
1	Body	A216 Gr. WCB
2	Body cap	A216 Gr. WCB
3	Stem	JIS SUS630*1
4	Ball	A276 Type 304 + SFNi*2
7	Gland	A276 Type 304
8	Gland packing	Flexible graphite
14	Set pin	A576 Gr. 1045
16	Name plate	Stainless steel
19A	Gasket	Flexible graphite
19B	Gasket	Flexible graphite
19C	Gasket	Flexible graphite
30	Ball seat	A276 Type 316 + SFNi*2
33A	Cup nut	A194 Gr. 2H
33B	Cover nut	A194 Gr. 2H
34	Gland nut	A194 Gr. 8
35A	Cap bolt	A193 Gr. B7
35B	Cover bolt	A193 Gr. B7
36A	Gland bolt	A193 Gr. B7
36B	Gland bolt	A193 Gr. B8
44	Gasket	Flexible graphite
46	Flange	A276 Type 304
60A	Key	Alloy steel
60B	Key	JIS SUS630*1
67A	Stem bearing	A276 Type 304 + SFNi*2
67B	Stem bearing	A276 Type 304 + SFNi*2
67C	Stem bearing	A276 Type 304 + SFNi*2
85	Plug	A576 Gr. 1025
92	Connector	Carbon steel
93	Bracket	Carbon steel
102	Gear unit	
103	Bottom stem	Stainless steel + SFNi*2
124	Spring pin	Stainless steel
138	Bolt	Carbon steel
141	Bolt	Carbon steel
143	Seat spring	INCONEL® X-750
144	Gland plate	A105 + Co-Cr-W Alloy
147	End plate	A105
175	Seat retainer	A276 Type 304
176	Retainer packing	Flexible graphite

*1 Equivalent to ASTM A564 TYPE 630
*2 Ni-Cr Alloy Thermal spraying

Dimensions:G-150SCTC6H

Unit: mm

Nominal size		d	H1	H2	D1	L	L1	End flange								A	B	Gear unit type & size
								D	Bolt hole			Bolt size	g	t	f			
in.	mm								C	NO.	h							
10	250	254	647	339	500	533	266.5	406	362.0	12	25	7/8	324	30.2	1.6	213	377	NO.7
12	300	305	722	385	500	610	305	483	432.0	12	25	7/8	381	31.8	1.6	213	377	NO.7
14	350	337	762	424	500	686	343	533	476.5	12	29	1	413	35.0	1.6	213	377	NO.7

●Metal seated ball valve（Trim 6H）

G-300UTC6H（M）

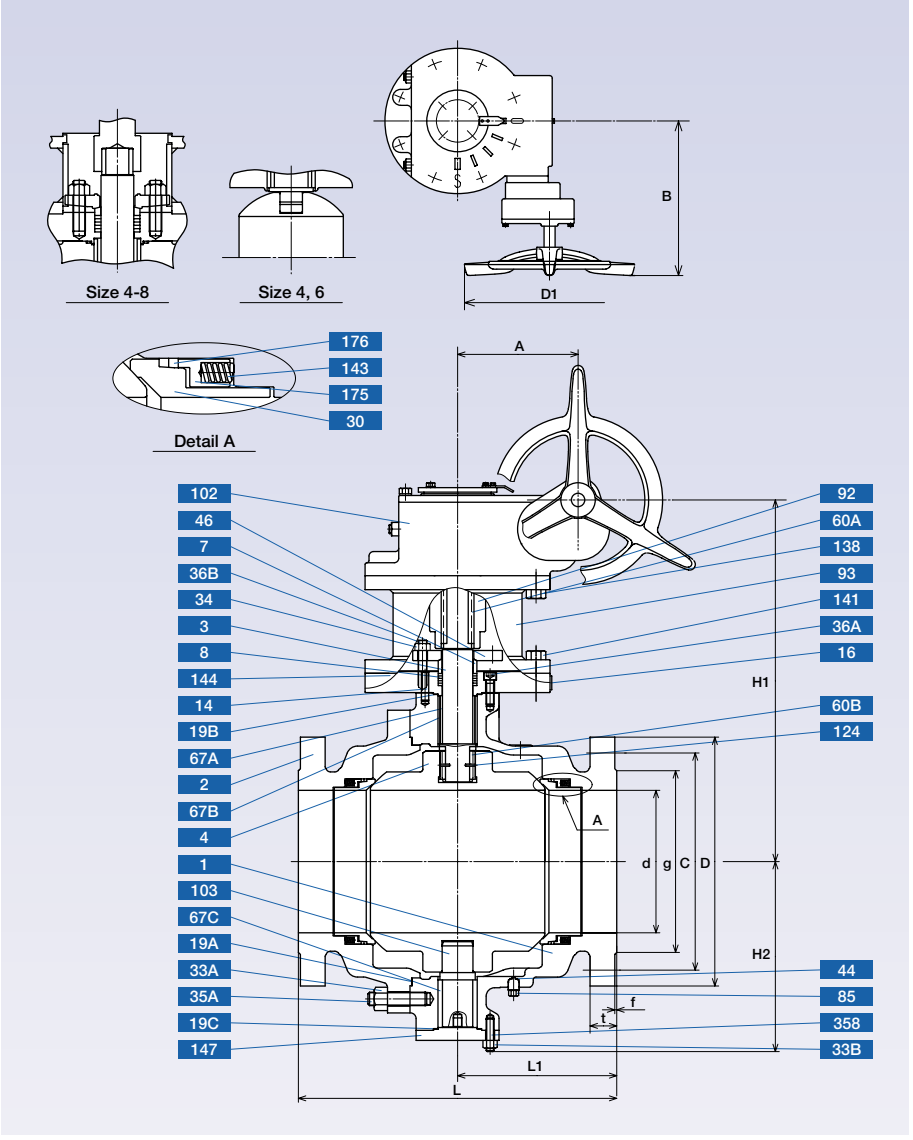

•Reduced bore is also available. : 300UTCR6H(M)
G-300UTCR6H(M)

Construction and materials

No.	Parts	Specifications
		G-300UTC6H
1	Body	A351 Gr. CF8M
2	Body cap	A351 Gr. CF8M
3	Stem	JIS SUS630*1
4	Ball	A276 Type 304 + SFNi*2
7	Gland	A276 Type 304
8	Gland packing	Flexible graphite
14	Set pin	A276 Type 304
16	Name plate	Stainless steel
19A	Gasket	Flexible graphite
19B	Gasket	Flexible graphite
19C	Gasket	Flexible graphite
30	Ball seat	A276 Type 316 + SFNi*2
33A	Cup nut	A194 Gr. 8
33B	Cover nut	A194 Gr. 8
34	Gland nut	A194 Gr. 8
35A	Cap bolt	A193 Gr. B8
35B	Cover bolt	A193 Gr. B8
36A	Gland bolt	A193 Gr. B8
36B	Gland bolt	A193 Gr. B8
44	Gasket	Flexible graphite
46	Flange	A276 Type 304
60A	Key	Alloy steel
60B	Key	JIS SUS630*1
67A	Stem bearing	A276 Type 316 + SFNi*2
67B	Stem bearing	A276 Type 316 + SFNi*2
67C	Stem bearing	A276 Type 316 + SFNi*2
85	Plug	A276 Type 304
92	Connector	Carbon steel
93	Bracket	Carbon steel
102	Gear unit	
103	Bottom stem	Stainless steel + SFNi*2
124	Spring pin	Stainless steel
138	Bolt	Carbon steel
141	Bolt	Carbon steel
143	Seat spring	INCONEL® X-750
144	Gland plate	A276 Type 304 + Co-Cr-W Alloy
147	End plate	A276 Type 304
175	Seat retainer	A276 Type 304
176	Retainer packing	Flexible graphite

*1 Equivalent to ASTM A564 TYPE 630
*2 Ni-Cr Alloy Thermal spraying

Dimensions:G-300UTC6H（M）

Unit: mm

Nominal size		d	H1	H2	D1	L	L1	End flange								A	B	Gear unit type & size
								D	Bolt hole			Bolt size	g	t	f			
in.	mm								C	NO.	h							
4*	100	102	352	153	360	305	152.5	254	200.0	8	22	3/4	157	31.8	1.6	89	210	NO.4
6	150	152	385	219	500	403	201.5	318	270.0	12	22	3/4	216	36.6	1.6	93.5	363	NO.5
8	200	203	462	273	500	502	251	381	330.0	12	25	7/8	270	41.3	1.6	134	377	NO.6
10	250	254	647	339	500	568	284	444	387.5	16	29	1	324	47.7	1.6	213	377	NO.7
12	300	305	722	385	500	648	324	521	451.0	16	32	1 1/8	381	50.8	1.6	213	377	NO.7
14	350	337	762	424	500	762	381	584	514.5	20	32	1 1/8	413	54.0	1.6	213	377	NO.7

* 2 and 3 are also available with a lever hundle.

●Metal seated ball valve（Trim 6H）

G-300SCTC6H

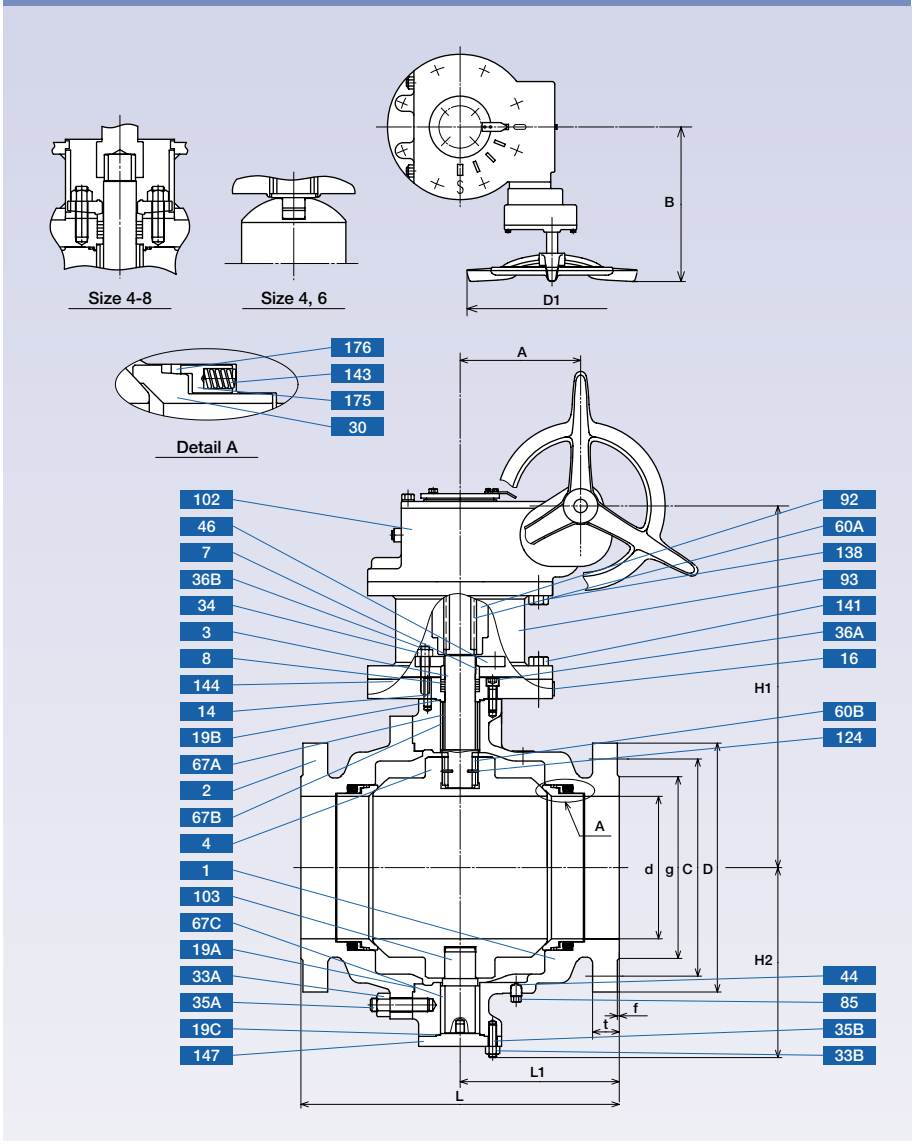

•Reduced bore is also available. : 300SCTCR6H
G-300SCTCR6H

Construction and materials

No.	Parts	Specifications
		G-300SCTC6H
1	Body	A216 Gr. WCB
2	Body cap	A216 Gr. WCB
3	Stem	JIS SUS630*1
4	Ball	A276 Type 304 + SFNi*2
7	Gland	A276 Type 304
8	Gland packing	Flexible graphite
14	Set pin	A576 Gr. 1045
16	Name plate	Stainless steel
19A	Gasket	Flexible graphite
19B	Gasket	Flexible graphite
19C	Gasket	Flexible graphite
30	Ball seat	A276 Type 316 + SFNi*2
33A	Cup nut	A194 Gr. 2H
33B	Cover nut	A194 Gr. 2H
34	Gland nut	A194 Gr. 8
35A	Cap bolt	A193 Gr. B7
35B	Cover bolt	A193 Gr. B7
36A	Gland bolt	A193 Gr. B7
36B	Gland bolt	A193 Gr. B8
44	Gasket	Flexible graphite
46	Flange	A276 Type 304
60A	Key	Alloy steel
60B	Key	JIS SUS630*1
67A	Stem bearing	A276 Type 304 + SFNi*2
67B	Stem bearing	A276 Type 304 + SFNi*2
67C	Stem bearing	A276 Type 304 + SFNi*2
85	Plug	A576 Gr. 1025
92	Connector	Carbon steel
93	Bracket	Carbon steel
102	Gear unit	
103	Bottom stem	Stainless steel + SFNi*2
124	Spring pin	Stainless steel
138	Bolt	Carbon steel
141	Bolt	Carbon steel
143	Seat spring	INCONEL® X-750
144	Gland plate	A105 + Co-Cr-W Alloy
147	End plate	A105
175	Seat retainer	A276 Type 304
176	Retainer packing	Flexible graphite

*1 Equivalent to ASTM A564 TYPE 630
*2 Ni-Cr Alloy Thermal spraying

Dimensions:G-300SCTC6H

Unit: mm

Nominal size		d	H1	H2	D1	L	L1	End flange								A	B	Gear unit type & size
								D	Bolt hole			Bolt size	g	t	f			
in.	mm								C	NO.	h							
4*	100	102	352	153	360	305	152.5	254	200.0	8	22	3/4	157	31.8	1.6	89	210	NO.4
6	150	152	385	219	500	403	201.5	318	270.0	12	22	3/4	216	36.6	1.6	93.5	363	NO.5
8	200	203	462	273	500	502	251	381	330.0	12	25	7/8	270	41.3	1.6	134	377	NO.6
10	250	254	647	339	500	568	284	444	387.5	16	29	1	324	47.7	1.6	213	377	NO.7
12	300	305	722	385	500	648	324	521	451.0	16	32	1 1/8	381	50.8	1.6	213	377	NO.7
14	350	337	762	424	500	762	381	584	514.5	20	32	1 1/8	413	54.0	1.6	213	377	NO.7

* 2 and 3 are also available with a lever hundle.

●Metal seated ball valve（Trim 6H）

600UTC6H（M）

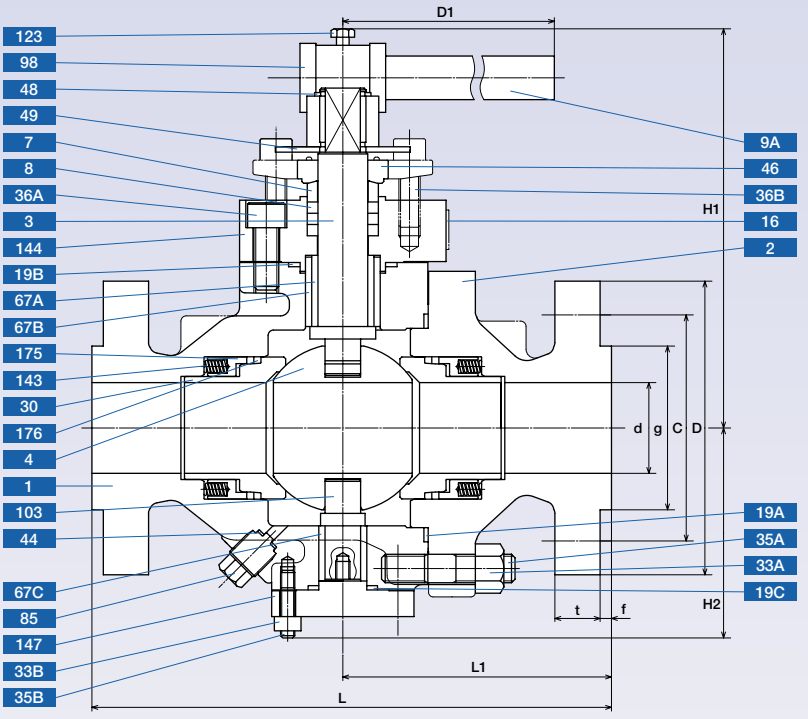

Construction and materials

No.	Parts	Specifications
		600UTC6H
1	Body	A351 Gr. CF8M
2	Body cap	A351 Gr. CF8M
3	Stem	JIS SUS630*1
4	Ball	A276 Type 304 + SFNi*2
7	Gland	A276 Type 304
8	Gland packing	Flexible graphite
9A	Handle bar	Carbon steel
9B	Handle head	Ductile iron
16	Name plate	Stainless steel
19A	Gasket	Flexible graphite
19B	Gasket	Flexible graphite
19C	Gasket	Flexible graphite
30	Ball seat	A276 Type 304 + SFNi*2
33A	Cup nut	A194 Gr. 8
33B	Cover nut	A194 Gr. 8
35A	Cap bolt	A193 Gr. B8
35B	Cover bolt	A193 Gr. B8
36A	Gland bolt	A193 Gr. B8
36B	Gland bolt	A193 Gr. B8
44	Gasket	Flexible graphite
46	Flange	A351 Gr. CF8
48	Spring pin	A276 Type 304
49	Stopper	A276 Type 304
67A	Stem bearing	A276 Type 304 + SFNi*2
67B	Stem bearing	A276 Type 304 + SFNi*2
67C	Stem bearing	A276 Type 304 + SFNi*2
85	Plug	A276 Type 304
103	Bottom stem	Stainless steel + SFNi*2
123	Handle bolt	Carbon steel
143	Seat spring	INCONEL® X-750
144	Gland plate	A276 Type 304 + Co-Cr-W Alloy
147	End plate	A276 Type 304
175	Retainer gland	A276 Type 304
176	Retainer packing	Flexible graphite

*1 Equivalent to ASTM A564 TYPE 630
*2 Ni-Cr Alloy Thermal spraying

•Reduced bore is also available. : 600UTCR6H(M)

Dimensions:600UTC6H（M）

Unit: mm

Nominal size		d	H1	H2	D1	L	L1	End flange							
								D	Bolt hole			Bolt size	g	t	f
in.	mm								C	NO.	h				
2	50	51	230	119	1000	292	151	165	127.0	8	19	5/8	92	25.4	6.4
3	80	76	265	147	1500	356	188	210	168.0	8	22	3/4	127	31.8	6.4

●Metal seated ball valve（Trim 6H）

G-600UTC6H（M）

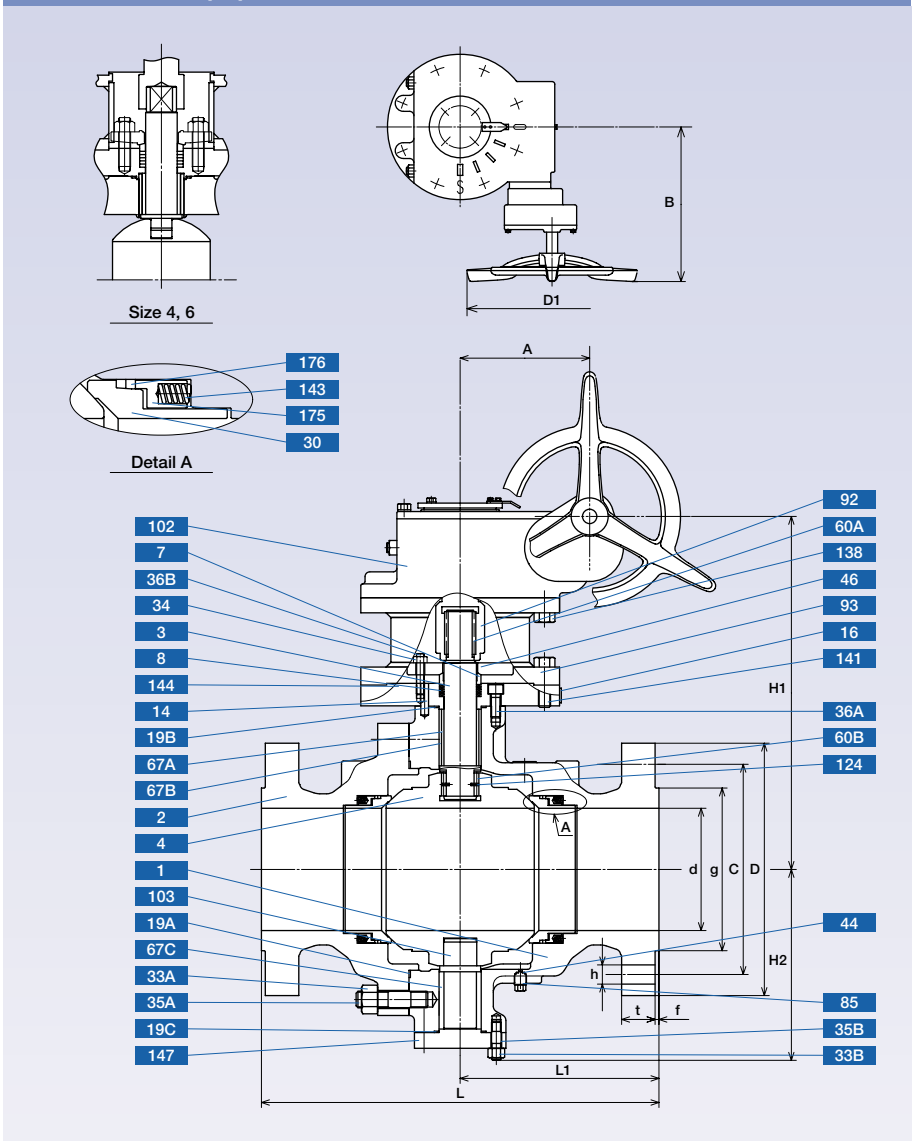

•Reduced bore is also available. : G-600UTCR6H(M)

Construction and materials

No.	Parts	Specifications
		G-600UTC6H
1	Body	A351 Gr. CF8
2	Body cap	A351 Gr. CF8
3	Stem	JIS SUS630*1
4	Ball	A276 Type 304 + SFNi*2
7	Gland	A276 Type 304
8	Gland packing	Flexible graphite
14	Set pin	A276 Type 304
16	Name plate	Stainless steel
19A	Gasket	Flexible graphite
19B	Gasket	Flexible graphite
19C	Gasket	Flexible graphite
30	Ball seat	A276 Type 304 + SFNi*2
33A	Cup nut	A194 Gr. 8
33B	Cover nut	A194 Gr. 8
34	Gland nut	A194 Gr. 8
35A	Cap bolt	A193 Gr. B8
35B	Cover bolt	A193 Gr. B8
36A	Gland bolt	A193 Gr. B8
36B	Gland bolt	A193 Gr. B8
44	Gasket	Flexible graphite
46	Flange	A351 Gr. CF8 or A276 Type 304
60A	Key	Alloy steel (size 8 & over)
60B	Key	JIS SUS630*1 (size 8 & over)
67A	Stem bearing	A276 Type 304 + SFNi*2
67B	Stem bearing	A276 Type 304 + SFNi*2
67C	Stem bearing	A276 Type 304 + SFNi*2
85	Plug	A276 Type 304
92	Connector	Carbon steel
93	Bracket	Carbon steel
102	Gear unit	
103	Bottom stem	Stainless steel + SFNi (1)
124	Spring pin	Stainless steel
138	Bolt	Carbon steel
141	Bolt	Carbon steel
143	Seat spring	INCONEL® X-750
144	Gland plate	A276 Type 304 + Co-Cr-W Alloy
147	End plate	A276 Type 304
175	Retainer gland	A276 Type 304
176	Retainer packing	Flexible graphite

*1 Equivalent to ASTM A564 TYPE 630
*2 Ni-Cr Alloy Thermal spraying

Dimensions:G-600UTC6H（M）

Unit: mm

Nominal size		d	H1	H2	D1	L	L1	End flange								A	B	Gear unit type & size
								D	Bolt hole			Bolt size	g	t	f			
in.	mm								C	NO.	h							
4	100	102	330	172	500	432	226	273	216.0	8	25	7/8	157	38.1	6.4	93.5	363	NO.5
6	150	152	435	250	500	559	279.5	356	292.0	12	29	1	216	47.7	6.4	134	377	NO.6
8	200	203	617	318	500	660	330	419	349.0	12	32	1 1/8	270	55.6	6.4	213	377	NO.7
10	250	254	707	372	500	787	393.5	508	432.0	16	35	1 1/4	324	63.5	6.4	213	377	NO.7
12	300	305	835	434	500	838	419	559	489.0	20	35	1 1/4	381	66.7	6.4	277	457	NO.8
14	350	337	873	484	500	889	444.5	603	527.0	20	38	1 3/8	413	69.9	6.4	277	457	NO.8

●Metal seated ball valve（Trim 6H）

600SCTC6H

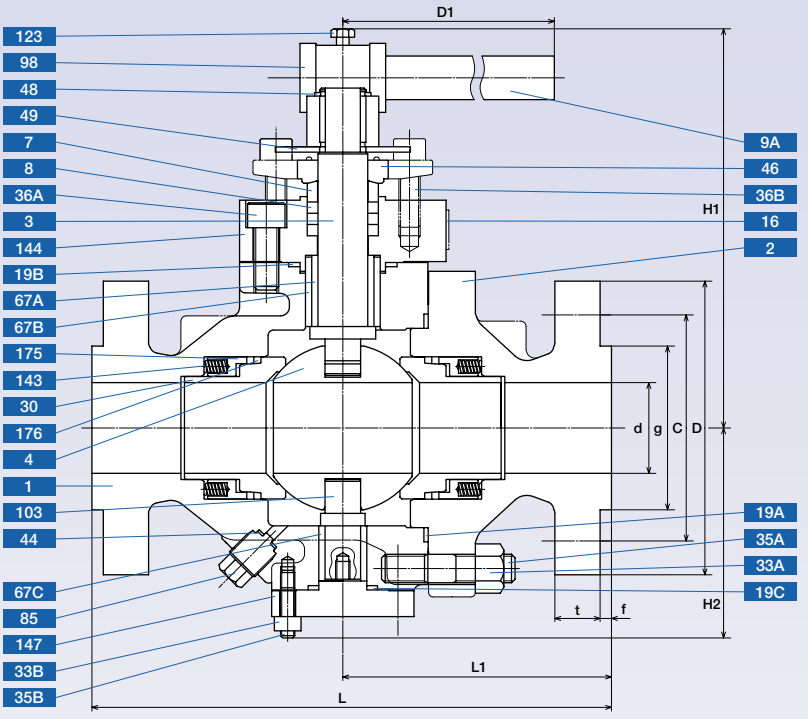

•Reduced bore is also available. : 600SCTCR6H

Construction and materials

No.	Parts	Specifications
		600SCTC6H
1	Body	A216 Gr. WCB
2	Body cap	A216 Gr. WCB
3	Stem	JIS SUS630*1
4	Ball	A276 Type 304 + SFNi*2
7	Gland	A276 Type 304
8	Gland packing	Flexible graphite
9A	Handle bar	Carbon steel
9B	Handle head	Ductile iron
16	Name plate	Stainless steel
19A	Gasket	Flexible graphite
19B	Gasket	Flexible graphite
19C	Gasket	Flexible graphite
30	Ball seat	A276 Type 304 + SFNi*2
33A	Cup nut	A194 Gr. 2H
33B	Cover nut	A194 Gr. 2H
35A	Cap bolt	A193 Gr. B7
35B	Cover bolt	A193 Gr. B7
36A	Gland bolt	A193 Gr. B7
36B	Gland bolt	A193 Gr. B8
44	Gasket	Flexible graphite
46	Flange	A351 Gr. CF8
48	Spring pin	Alloy steel
49	Stopper	Stainless steel
67A	Stem bearing	A276 Type 304 + SFNi*2
67B	Stem bearing	A276 Type 304 + SFNi*2
67C	Stem bearing	A276 Type 304 + SFNi*2
85	Plug	A576 Gr. 1025
103	Bottom stem	Stainless steel + SFNi*2
123	Handle bolt	Carbon steel
143	Seat spring	INCONEL® X-750
144	Gland plate	A105 + Co-Cr-W Alloy
147	End plate	A105
175	Retainer gland	A276 Type 304
176	Retainer packing	Flexible graphite

*1 Equivalent to ASTM A564 TYPE 630
*2 Ni-Cr Alloy Thermal spraying

Dimensions:600SCTC6H

Unit: mm

Nominal size		d	H1	H2	D1	L	L1	End flange							
								D	Bolt hole			Bolt size	g	t	f
in.	mm								C	NO.	h				
2	50	51	230	119	1000	292	151	165	127.0	8	19	5/8	92	25.4	6.4
3	80	76	265	147	1500	356	188	210	168.0	8	22	3/4	127	31.8	6.4

●Metal seated ball valve（Trim 6H）

G-600SCTC6H

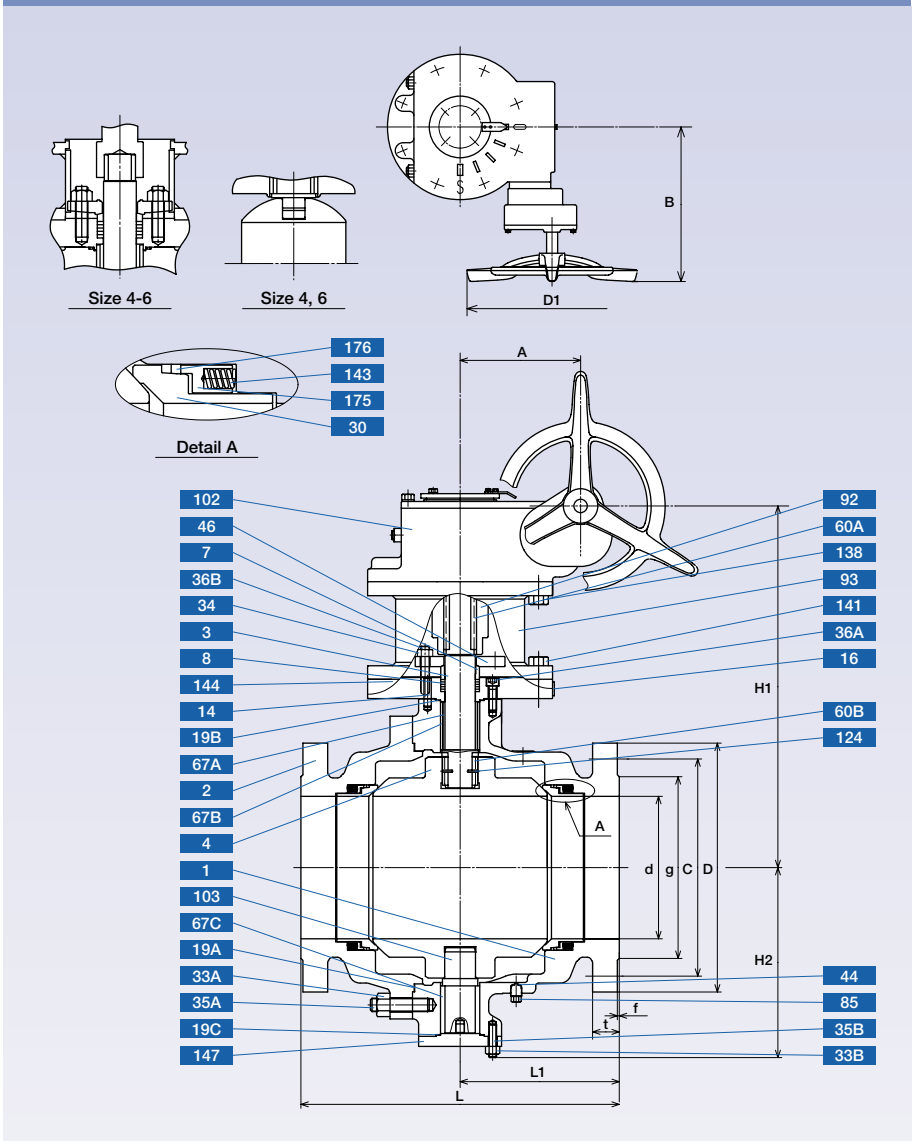

•Reduced bore is also available. : G-600SCTCR6H

Construction and materials

No.	Parts	Specifications
		G-600SCTC6H
1	Body	A216 Gr. WCB
2	Body cap	A216 Gr. WCB
3	Stem	JIS SUS630*1
4	Ball	A276 Type 304 + SFNi*2
7	Gland	A276 Type 304
8	Gland packing	Flexible graphite
14	Set pin	A576 Gr. 1045
16	Name plate	Stainless steel
19A	Gasket	Flexible graphite
19B	Gasket	Flexible graphite
19C	Gasket	Flexible graphite
30	Ball seat	A276 Type 316 + SFNi*2
33A	Cup nut	A194 Gr. 2H
33B	Cover nut	A194 Gr. 2H
34	Gland nut	A194 Gr. 8
35A	Cap bolt	A193 Gr. B7
35B	Cover bolt	A193 Gr. B7
36A	Gland bolt	A193 Gr. B7
36B	Gland bolt	A193 Gr. B8
44	Gasket	Flexible graphite
46	Flange	A276 Type 304
60A	Key	Alloy steel
60B	Key	JIS SUS630*1
67A	Stem bearing	A276 Type 304 + SFNi*2
67B	Stem bearing	A276 Type 304 + SFNi*2
67C	Stem bearing	A276 Type 304 + SFNi*2
85	Plug	A576 Gr. 1025
92	Connector	Carbon steel
93	Bracket	Carbon steel
102	Gear unit	
103	Bottom stem	Stainless steel + SFNi*2
124	Spring pin	Stainless steel
138	Bolt	Carbon steel
141	Bolt	Carbon steel
143	Seat spring	INCONEL® X-750
144	Gland plate	A105 + Co-Cr-W Alloy
147	End plate	A105
175	Seat retainer	A276 Type 304
176	Retainer packing	Flexible graphite

*1 Equivalent to ASTM A564 TYPE 630
*2 Ni-Cr Alloy Thermal spraying

Dimensions:G-600SCTC6H

Unit: mm

Nominal size		d	H1	H2	D1	L	L1	End flange								A	B	Gear unit type & size
								D	Bolt hole			Bolt size	g	t	f			
in.	mm								C	NO.	h							
4	100	102	330	172	500	432	206	273	216.0	8	25	7/8	157	38.1	6.4	93.5	363	NO.5
6	150	152	435	250	500	559	279.5	356	292.0	12	29	1	216	47.7	6.4	134	377	NO.6
8	200	203	617	318	500	660	330	419	349.0	12	32	1 1/8	270	55.6	6.4	213	377	NO.7
10	250	254	707	372	500	787	393.5	508	432.0	16	35	1 1/4	324	63.5	6.4	213	377	NO.7
12	300	305	835	434	500	838	419	559	489.0	20	35	1 1/4	381	66.7	6.4	277	457	NO.8
14	350	337	873	484	500	889	444.5	603	527.0	20	38	1 3/8	413	69.9	6.4	277	457	NO.8

Construction and Materials

JIS 10K/20K ASME 150/300 Hard Graphite Seated Ball Valve

No.	Parts	JIS Material Designation (Trim 3H)			ASTM Material Designation (Trim 3H)		
		Stainless steel shell		Carbon steel shell	Stainless steel shell		Carbon steel shell
		10/20 UTB 3H	10/20 UTB 3HM	10/20 SCTB 3H	150/300 UTB 3H	150/300 UTB 3HM	150/300 SCTB 3H
1	Body	SCS13A	SCS14A	SFVC2A or SCPH2	CF8	CF8M	A105 or WCB
2	Body cap	SCS13A	SCS14A	SFVC2A or SCPH2	CF8	CF8M	A105 or WCB
3	Stem	SUS630			A564 Type 630		
4	Ball	SUS304 or SCS13A	SUS316 or SCS14A	SUS304 or SCS13A	Type 304 or CF8	Type 316 or CF8M	Type 304 or CF8
7	Gland	SCS13A			CF8		
8	Gland packing	Flexible graphite			Flexible graphite		
9	Handle	FCD400-15			Ductile iron		
9A	Handle bar	STPG			Carbon steel		
9B	Handle head	FCD400-15			Ductile iron		
16A	Name plate	A1050P			Aluminum		
16B	Washer	SS400			Carbon steel		
19	Gasket	Flexible graphite			Flexible graphite		
20	Packing washer	SUS316			Type 316		
30	Ball seat	Carbon + Stainless steel			Carbon + Stainless steel		
33	Cap nut	SUS304		S45C	A194 Gr. 8		A194 Gr. 2H
35	Cap bolt	SUS304		SNB7	A193 Gr. B8		A193 Gr. B7
36	Gland bolt	SUS304			A193 Gr. B8		
47	Thrust washer	Carbon			Carbon		
48	Snap ring	SUS304		SK5	Type 304		Carbon steel
49	Stopper	SUS304			Type 304		Stainless steel
67	Stem bearing	Carbon			Carbon		
123	Handle bolt	SS400			Carbon steel		
143	Seat spring	Stainless steel			Stainless steel		
176	Seat gasket	Flexible graphite			Flexible graphite		

Construction and Materials

JIS 10K/20K ASME 150/300 Hard Graphite Seated Ball Valve (Trim 3H)

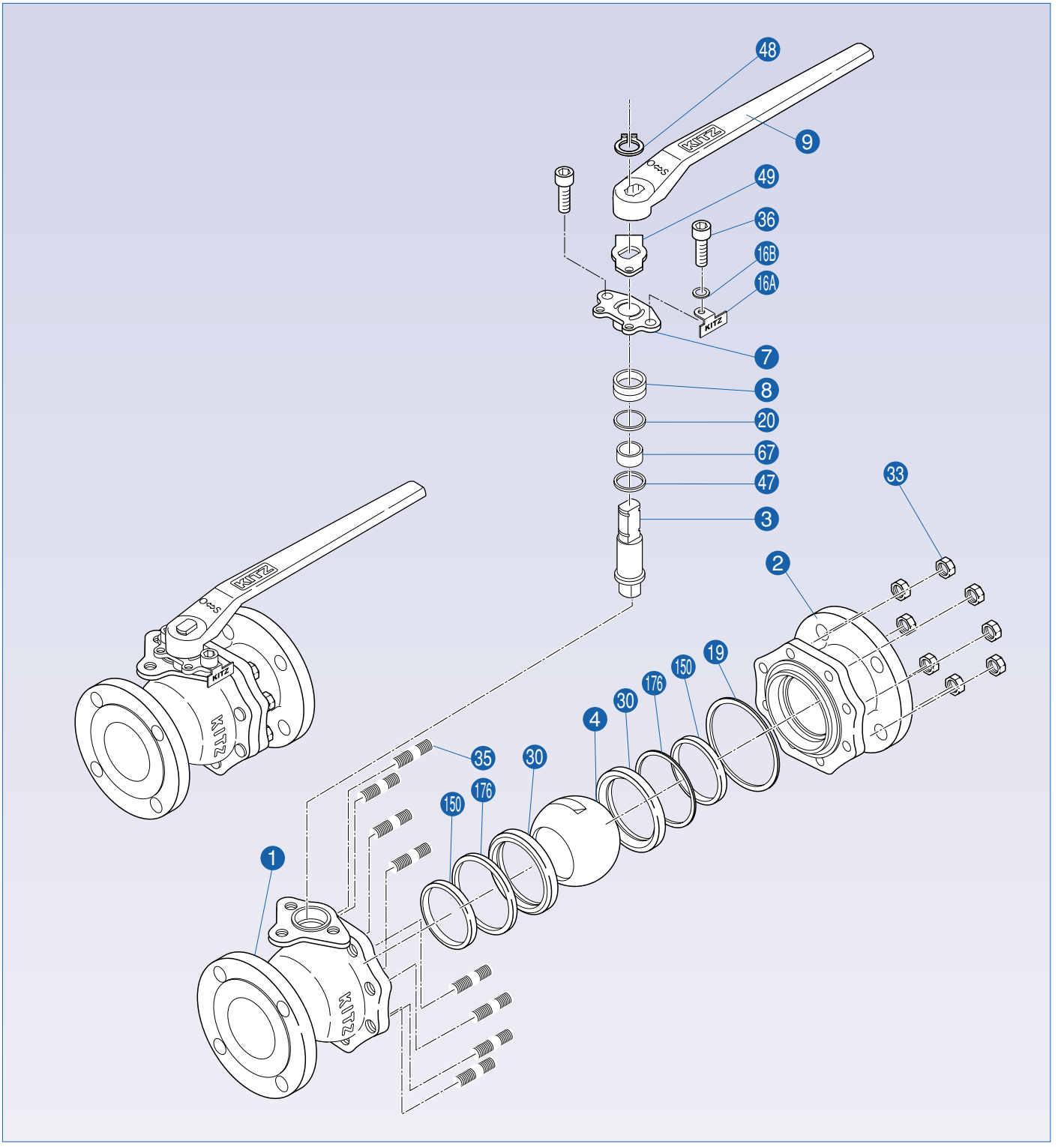

Construction and Materials

JIS 10K/20K ASME 150/300 Metal Seated Ball Valve

No.	Parts	JIS Material Designation (Trim 5H)			ASTM Material Designation (Trim 5H)		
		Stainless steel shell		Carbon steel shell	Stainless steel shell		Carbon steel shell
		10/20 UTB 5H	10/20 UTB 5HM	10/20 SCTB 5H	150/300 UTB 5H	150/300 UTB 5HM	150/300 SCTB 5H
1	Body	SCS13A	SCS14A	SFVC2A or SCPH2	CF8	CF8M	A105 or WCB
2	Body cap	SCS13A	SCS14A	SFVC2A or SCPH2	CF8	CF8M	A105 or WCB
3	Stem	SUS630			A564 Type 630		
4	Ball	SUS316 or SCS14A with Cr plating			Type 316 or CF8M with Cr plating		
7	Gland	SCS13A			CF8		
8	Gland packing	Flexible graphite			Flexible graphite		
9	Handle	FCD400-15			Ductile iron		
9A	Handle bar	SGP			Carbon steel		
9B	Handle head	FCD400-15			Ductile iron		
16A	Name plate	A1050P			Aluminum		
16B	Washer	SS400			Carbon steel		
19	Gasket	Flexible graphite			Flexible graphite		
20	Packing washer	SUS316			Type 316		
30	Ball seat	SUS316 reinforced Ni-Cr alloy hard facing*1			Type 316 reinforced Ni-Cr alloy hard facing*1		
33	Cap nut	SUS304		S45C	A194 Gr. 8		A194 Gr. 2H
35	Cap bolt	SUS304		SNB7	A193 Gr. B8		A193 Gr. B7
36	Gland bolt	SUS304			A193 Gr. B8		
47	Thrust washer	Carbon			Carbon		
48	Snap ring	SUS304		SK5	Type 304		Carbon steel
49	Stopper	SUS304			Type 304		
67	Stem bearing	Carbon			Carbon		
123	Handle bolt	SS400			Carbon steel		
143	Seat spring	INCONEL® X-750			INCONEL® X-750		
176	Seat gasket	Stainless foil inserted flexible graphite			Stainless foil inserted flexible graphite		

*1 Equivalent to METCO Type 16C

Construction and Materials

JIS 10K/20K ASME 150/300 Metal Seated Ball Valve (Trim 5H)

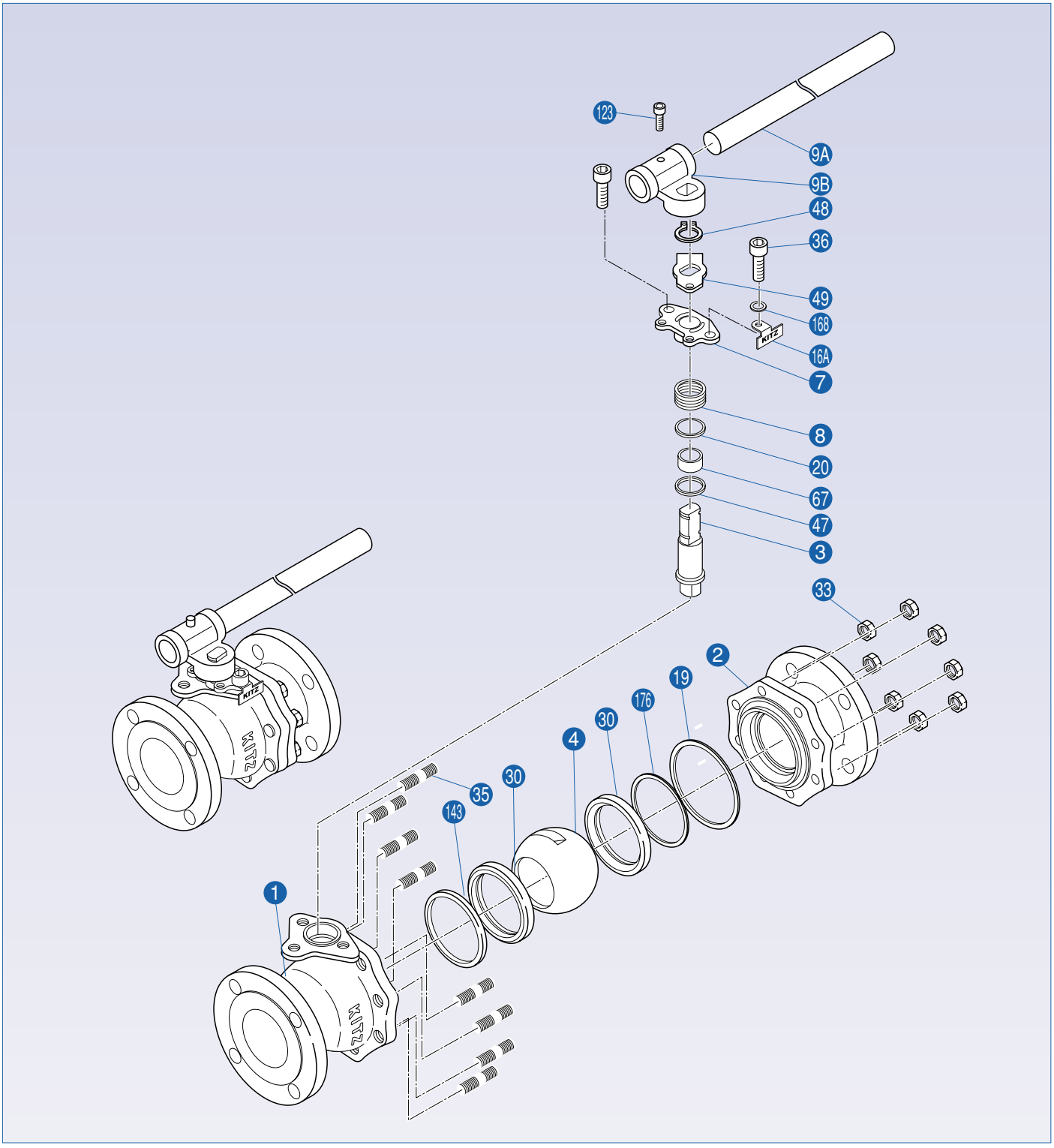

Construction and Materials

JIS 10K/20K ASME 150/300 Metal Seated Ball Valve

No.	Parts	JIS Material Designation (Trim 6H)			ASTM Material Designation (Trim 6H)		
		Stainless steel shell		Carbon steel shell	Stainless steel shell		Carbon steel shell
		10/20 UTB 6H	10/20 UTB 6HM	10/20 SCTB 6H	150/300 UTB 6H	150/300 UTB 6HM	150/300 SCTB 6H
1	Body	SCS13A	SCS14A	SFVC2A or SCPH2	CF8	CF8M	A105 or WCB
2	Body cap	SCS13A	SCS14A	SFVC2A or SCPH2	CF8	CF8M	A105 or WCB
3	Stem	SUS630			A564 Type 630		
4	Ball	SUS316 or SCS14A with Ni-Cr alloy hard facing			Type 316 or CF8M with Ni-Cr alloy hard facing		
7	Gland	SCS13A			CF8		
8	Gland packing	Flexible graphite			Flexible graphite		
9	Handle	FCD400			Ductile iron		
9A	Handle bar	SGP			Carbon steel		
9B	Handle head	FCD400-15			Ductile iron		
16A	Name plate	A1050P			Aluminum		
16B	Washer	SS400			Carbon steel		
19	Gasket	Flexible graphite			Flexible graphite		
20	Packing washer	SUS316			Type 316		
30	Ball seat	SUS316 reinforced Ni-Cr alloy hard facing*1			Type 316 reinforced Ni-Cr alloy hard facing*1		
33	Cap nut	SUS304		S45C	A194 Gr. 8		A194 Gr. 2H
35	Cap bolt	SUS304		SNB7	A193 Gr. B8		A193 Gr. B7
36	Gland bolt	SUS304			A193 Gr. B8		A193 Gr. B8
47	Thrust washer	Carbon			Carbon		
48	Snap ring	SUS304		SK5	Type 304		Carbon steel
49	Stopper	SUS304			Type 304		Stainless steel
67	Stem bearing	Carbon			Carbon		
123	Handle bolt	SS400			Carbon steel		
143	Seat spring	INCONEL® X-750			INCONEL® X-750		
176	Seat gasket	Stainless foil inserted flexible graphite			Stainless foil inserted flexible graphite		

*1 Equivalent to METCO Type 16C

Construction and Materials

JIS 10K/20K ASME 150/300 Metal Seated Ball Valve (Trim 6H)

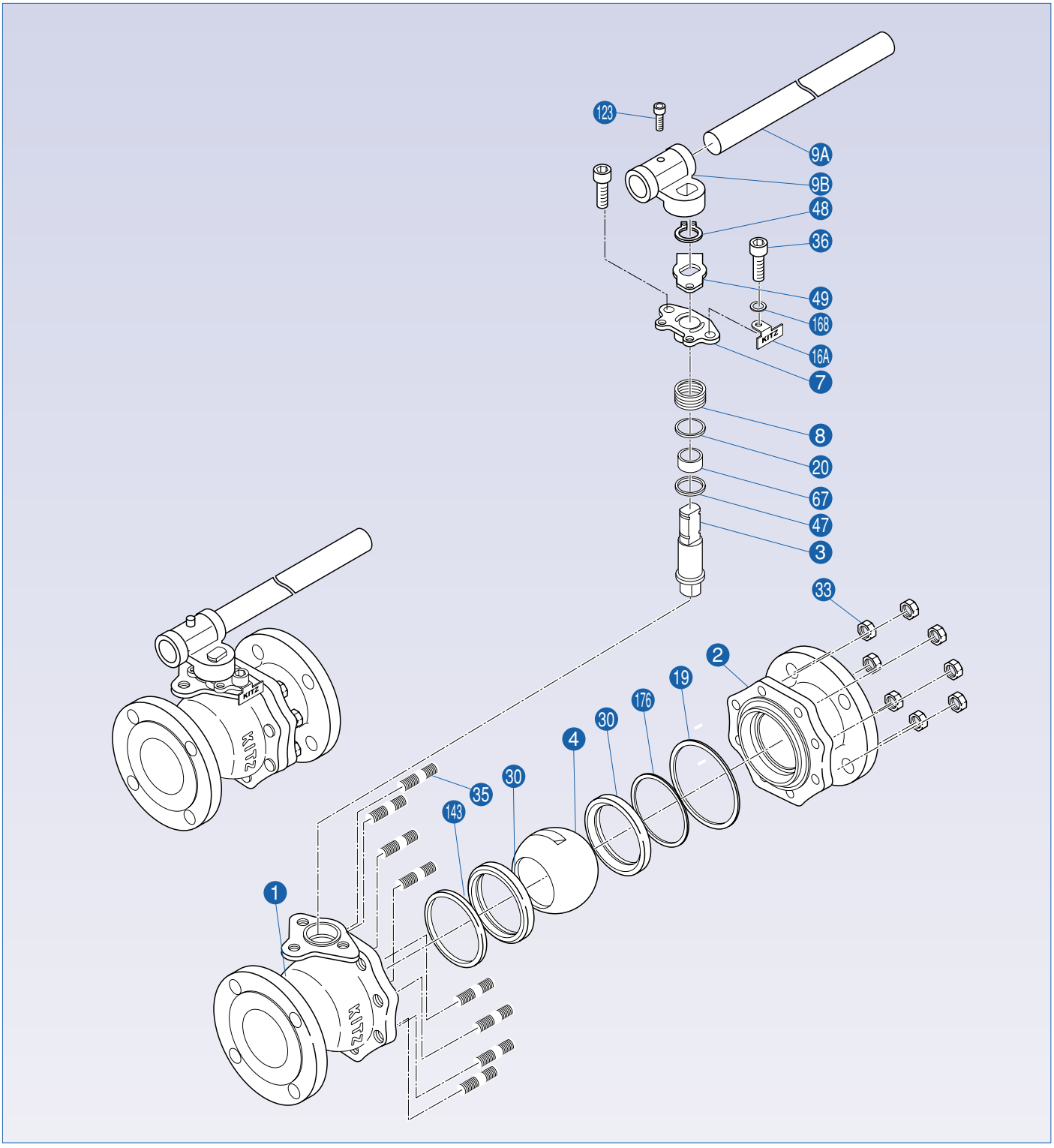

Technical Data

Flow Efficiency of KITZ Ball Valves

Multiple the volumetric flow rate (m3/H) in Table 1 with the flow rate (%) in Table 2 to calculate the flow volume at a given opening angle of a Full Port ball valve.

Table 1

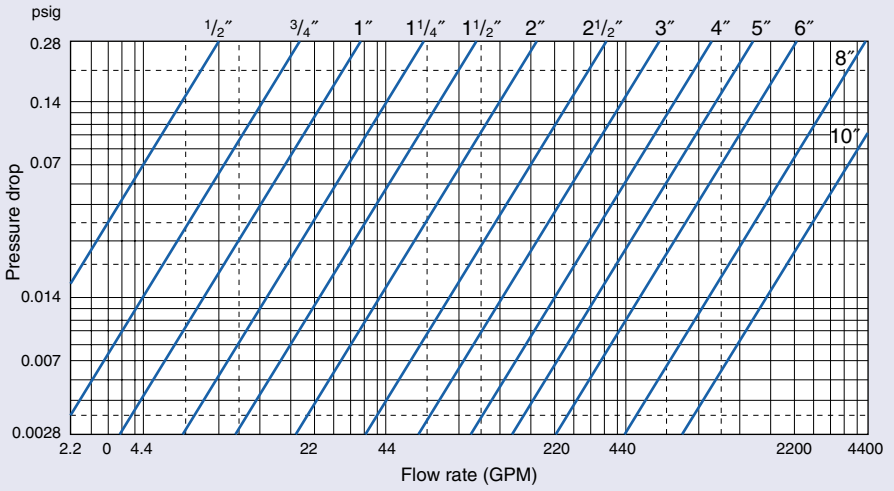

Table 2

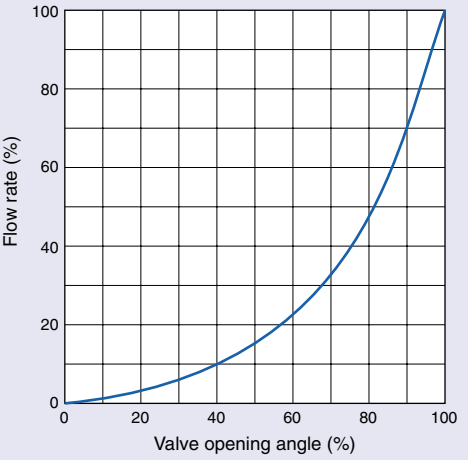

Chemical Resistance of KITZ Hard Graphite Seats (Trim 3H)

○:Recommended
×:Not recommended

Chemicals	Density (%)	Temp. (˚F)	Applicability
Sulfuric acid	0—70	*	○
	70—98	212	○
	98	302	×
Sulfuric acid + SO_3	98	* *	×
Nitric acid	0—10	185	○
	10—20	149	○
	65	248	×
Sulfuric acid + Nitric acid	100	* *	×
Fluorine gas	100	* *	×
Chromic acid solution	60	212	○
Hydrogen sulfide gas	100	212	○
Sulfurous acid gas	100	* *	○
Caustic soda	60	212	○

Chemicals	Density (%)	Temp. (˚F)	Applicability
Ammonia hydroxide	25	122	○
Sodium chlorite	100	212	○
Hydrochloric acid	100	212	○
Bromine	100	* *	×
Chlorine gas	100	212	○
Chlorine gas	100	* *	○
Gasoline	100	*	○
Acetone	100	*	○
Ethylene glycol	100	*	○
Potassium per manganate	50	212	×
Steam	—	*	○
Air	—	842	○

* At any temperature within the range of P-T rating
* * Room temparature
Possibilities of the galvanic corrosion caused by coexisting different metallic ions are not considered here.

Valve Disassembly and Reassembly for Maintenance*

1. Valve Disassembly

1-1. Work to do before valve dismantling from the pipeline:

(a) Relieve the line pressure completely and discharge all line fluids from the bore and body cavity of the half opened valve.

(b) Mark the valve end flanges and coupled piping flanges adequately for easy remounting of the valve on the pipeline.

1-2. Work to do before valve disassembly:

(a) Remove and collect all inside residues of the valve, if any, and record their conditions and locations, Subsequent examination of these records may be found useful for better valve maintenance.

(b) Mark the body-cap coupling flanges of the valve adequately for easy valve reassembly.

(c) If flange boltings are found seized or stuck, apply some lubricant and leave for a while for easier unthreading on valve disassembly.

1-3. Place the fully closed valve with the body flange down on a work bench, after having disassembled the valve operator, and proceed with disassembly of the cap from the body, referring to the illutrations on Page 37, 39 and 41. (No special tool is required.) Be careful not to damage the metal ball seat and ball, which are the most important valve parts.

1-4. After removal of the cap, place the valve body with “KITZ” mark up on the bench, and proceed with disassembly of the ball. Put soft clothes inside the valve body not to damage the ball, which is also an important member of the valve components.

1-5. Examination of the valve component parts:

(a) Clean the inside of the valve body and cap, and detect any wear, corrosion or cracks in the castings using a magnifying glass, or, where visual access is not easy, using a tube inspector or a mirror and a flashlight. Non-destructive examination may be carried out if found necessary. Measure the wall thickness of castings periodically to check any dangerous signs to jeopardize valve shell soundness.

(b) Inspect surfaces of the metal seat and ball carefully to detect any scratches or wear, which may be a cause to replace the seat and/or ball on reassembly. Other metal parts must be also checked carefully to decide whether they are still usable.

2. Valve Reassembly

2-1. Prepare new non-metal valve parts such as gaskets, gland packings, thrust washers, gland bushings, stem bearings and carbon graphite seats, and clean all metal parts before reassembly.

2-2. Proceed with valve reassembly, referring to the illustrations on Page 37, 39 and 41.

2-3. Pressurization for Trim 3H valves

To reassure smooth operation, 2 1/2” and larger carbon graphite seated valves should be pressurized after reassembly is completed, according to the following procedure:

(a) Pressurize the fully closed valve for 60 seconds as follows:

Class 10K/150 : 2 1/2” to 8” : 2.45 MPa
Class 20K/300 : 2 1/2” to 4” : 4.90 MPa
6” and 8” : 3.92 MPa

(b) Conduct above valve pressurization from both ends separately.

(c) Measure the unloaded operating torpue of the reassembled valve to confirm that the result is within the torque valve ranges given below:

2 1/2” : 40 to 80 N·m 6” : 180 to 400 N·m
3” : 60 to 140 N·m 8” : 300 to 900 N·m
4” : 100 to 200 N·m

(d) If the valve operating torque is found higher than the maximum valve provided above, repeat the pressurization of valves with 0.49 to 0.98 MPa higher pressure until the satisfactory result is confirmed.

3. Acceptance Test

After reassembly, open and close the valve several times to check satisfactory valve operation. Then pressure-test the valve according to the specifications given on Page 3 to ensure the satisfactory sealing performance for final acceptance.

* Refer to KITZ MT-05 Operation Manual for more information.

Memo

Memo

⚠ CAUTION

Pressure-temperature ratings and other performance data published in this catalog have been developed from our design calculation, in-house testing, field reports provided by our customers and/or published official standards or specifications. They are good only to cover typical applications as a general guideline to users of KITZ products introduced in this catalog.

For any specific application, users are kindly requested to contact KITZ Corporation for technical advice, or to carry out their own study and evaluation for proving suitability of these products to such an application. Failure to follow this request could result in property damage and/or personal injury, for which we shall not be liable.

While this catalog has been compiled with the utmost care, we assume no responsibility for errors, impropriety or inadequacy. Any information provided in this catalog is subject to from-time-to-time change without notice for error rectification, product discontinuation, design modification, new product introduction or any other cause that KITZ Corporation considers necessary. This edition cancels all previous issues.

⚠ NOTICE

If any products designated as strategic material in the Foreign Exchange and Foreign Trade Law, Cabinet Order Concerning Control of Export Trade, Cabinet Oeder Concerning Control of Foregn Exchange and other related laws and ordinances (“Foreign Exchange Laws”) are exported to any foreign country or countries, an export license issued by the Japanese Government will be required under the Foreign Exchange Laws.

Futher, there may be cases where an export license issued by the government of the United States or other country will be required under the applicable export-related laws and ordinances in such relevant countries.

The contract shall become effective subject to that a relevant export license is obtained from the Japanese Government.

A chrysanthemum-handle is a symbol of KITZ,
the brand of valve reliability

ISO 9001 certified since 1989

KITZ

KITZ CORPORATION

1-10-1, Nakase, Mihama-ku, Chiba 261-8577, Japan
International Sales Dept. Phone : 81-43-299-1730, 1732 and 1733
Fax : 81-43-299-0121

—— Distributed by ——