# H9990
# 操作说明书
# INSTRUCTION MANUAL

V1.00

十分感谢您购买富山牌工业缝纫机。
为了您的安全，在使用缝纫机之前，请仔细阅读产品说明书。
Thank you very much for buying a HIKARI sewing machine.
Before using your new machine, please read the safety instructions.

工业缝纫机的特性之一，因为要在机针和旋梭等运动零部件附近进行操作，而这些零部件很容易引起损伤的危险，所以请在受过培训的人或熟练人员的安全操作知识的指导下，正确的使用此缝纫机。

With industrial sewing machines, it is normal to carry out work while positioned directly in front of moving parts such as the needle and thread take-up，and consequently there is always a danger of injury that can be caused by these parts. follow the instructions from training personnel and instructors regarding safe and operation before operating the machine so that you will know how to use it correctly.

## 为了你的安全使用/SAFETY INSTRUCTIONS

[1]. 安全使用的标记及其意义/safety indications and their meanings
本使用说明书及产品所使用的标记和图案记号是为了你的安全而正确地使用产品，防止你及其他人受到危害和损害。表示方法及含义如下。
This instruction manual and the indications and symbols that are used on the machine itself are provided in order to ensure safe operation of this machine and to prevent accidents and injury to yourself or other people

## 标记/indications

⚠ 危险/DANGER 表示如果忽视此标记而进行了错误的操作，肯定会引起人员伤亡或重伤。

The instructions which follow this term indicate situations where failure to follow the instructions will almost certainly result in death or severe injury.

⚠ 注意/DANGER 表示如果忽视此标记而进行了错误的操作，有可能会引起人员受伤及造成设备损坏。 The instructions which follow this term indicate situations where failure to follow the instructions could injury when using the machine or physical damage to equipment and surroundings.

## 图案和符号/symbols

⚠ 该符号表示“应注意事项”。三角形中的图案表示必须要注意的实质内容（例如：左边的图案表示“当心受伤”。）This symbol indicates something that you should be careful of. the picture inside the triangle indicates the nature of the caution that must be taken.(for example, the symbol at left means“beware of injury”.)

⊘ 该符号表示“禁止”。This symbol indicates something that you must not do.

该符号表示“必须”。圆圈中的图案表示必须要做的事情的实质内容。（例如，左

边的图案表示“必须接地”）This symbol indicates something that you must do. the picture inside the circle indicates the nature of the thing that must be done.(for example, the symbol at left means“you must make the ground connection”.)

## [2].安全注意事项/Notes on safety

打开控制箱盖时，先关闭电源开关并将电源插头从插座上拔下，至少 5 分钟后，在打开控制箱盖，触摸带有高电压的区域将会造成人员受伤。Wait at east 5 minutes after turning off the power switch and disconnect the power cord from the wall outlet before opening the face plate of the control box. Touching areas where high voltages are present can result in severe injury.

## 使用环境/Environmental requirements

相对湿度应在 45%~85%范围内，并且设备内不会形成结露的环境下使用。干燥或多湿的环境和结露会影响缝纫机的正确操作。The relative humidity should be within the range of 45%to85% during use, and no dew formation should occur in any devices. Excessively dry or humid environments and dew formation may cause problems with correct operation.

使用时应避免暴露于直射的阳光下。直射的阳光下会影响缝纫机的正确操作。Avoid exposure to direct sunlight during use. Exposure to direct sunlight may cause problems with correct operation.

万一发生雷电暴风雨时，关闭电源开关，并将电源插头从插座上拔下。雷电可能会影响缝纫机的正确操作。In the event of an electrical storm, turn off the power and disconnect the power cord from the wall outlet .lightning may cause problems with correct operation.

## 安装/installation

请让受过培训的技术人员来安装缝纫机。 Machine installation should only be carried out by a qualified technician.

在安装完成前，请不要连接电源，如果误踩下踏脚板时，缝纫机动作会导致受伤。Do not connect the power cord until installation is complete. The machine may operate if the treadle is depressed by mistake, which could result in injury.

使用润滑油和黄油时，务必戴好保护眼镜和保护手套等，以防润滑油落入眼中或沾在皮肤上，引起发炎。另外，润滑油或黄油不能饮用，否则会引起呕吐和腹泻。将油放在小孩拿不到的地方。

Be sure to wear protective goggles and gloves when handling the lubricating oil and grease ,so that they do not get into your eyes or onto your skin, otherwise inflammation can result. Furthermore, do not drink the oil or eat the grease under any circumstances, as they can cause vomiting and diarrhea. Keep the oil out of the reach of children.

⚠ 缝纫机重 48Kg,安装工作必须由两人以上来完成。 The sewing machine weighs more than 48 Kg. the installation should be carried out by two or more people.

⚠ 请在切断电源后，再拔掉插头。不然易成为控制箱发生故障的原因。 Turn off the power switch before inserting or removing the plug, otherwise damage to the control box could result.

⚠ 如果使用带小脚轮的工作台，则应该固定小脚轮，使其不能移动。 If using a work table which has casters, the casters should be secured in such a way so that they cannot move.

⚠ 缝纫机头倒下或竖起时，请用双手进行操作。单手操作时因缝纫机的重量万一滑落易导致受伤。

Use both hands to hold the machine head when tilting it back or returning it to its original position. If only one hand is used, the weight of the machine head may cause your hand to slip, and your hand may get caught.

⚠⃠ 固定电缆时，不要过度弯曲电缆或用卡钉固定过紧，会引起火灾或触电的危险。When securing the cords, do not bend the cords excessively or fasten them too hard with staples, otherwise there is the danger that fire or electric shocks could occur.

## 缝纫/Sewing

⃠ 本缝纫机仅限于接受过安全操作培训的人员使用。 This sewing machine should only be used by operators who have received the necessary training in safe use beforehand.

⃠ 本缝纫机不能用于除缝纫外的任何其他用途。 This sewing machine should not be used by any applications other than sewing.

⚠ 使用缝纫机时必须戴上保护眼睛。如果不戴保护眼镜，断针时就会有危险，机针的折断部分可能会弹入眼睛并造成伤害。Be sure to wear protective goggles when using the machine. if goggles are not worn, there is the danger that if a needle breaks, parts of the broken needle may enter your eyes and injury may result.

⚠ 如果使用带小脚轮的工作台，则应该固定小脚轮使其不能移动。If using a work table which has casters should be secured in such a way so that they cannot move.

⚠ 最初使用缝纫机时，应进行 20 天的低速磨合运转（≤3500 r/min）at first operate the machine, should carry on low speed to whet to match an operation for 20 days.(3500 r/min)

⚠ 如果缝纫机操作发生误动作，或听到异常的噪音或闻到异常的气味，应立即切断电源。然后请与购买商店或受过培训的技术人员联系。If an error occurs in machine, or if abnormal noises or smells are noticed, immediately turn off the power switch. Then contact your nearest HIKARI dealer or a qualified technician.

⚠ 如果缝纫机出现故障，请与购买商店或受过培训的技术人员联系。If the machine develops a problem, contact your nearest HIKARI dealer or a qualified technician.

⚠ 发生下列情况时，请切断电源。否则误踩下踏脚板时，缝纫机动作会导致受伤。1.机针穿线时。2.更换机针或梭芯时。3.缝纫机不使用或人离开缝纫机时。Turn off the power switch at the following times. The machine may operate if the treadle is depressed by mistake, which could result in injury. 1. when threading the needle . 2. when replacing the bobble and needle. 3. when not using the machine and when leaving the machine unattended.

⚠ 为了安全起见，在使用缝纫机之前，请安装保护装置。如果未安装这些装置就使用缝纫机，会造成人身伤害及缝纫机损坏。Attach all safety devices before using the sewing machine. If the machine is used without these devices attached, injury may result.

⚠ 缝纫过程中，不要触摸任何运动部件或将物体靠在运动部件上，因为这会导致人身伤害及缝纫机损坏。Do not touch any of the moving parts or press any objects against the machine while sewing, as this may result in personal injury or damage to the machine.

⚠ 缝纫机头倒下或竖起时，请用双手进行操作。单手操作时因缝纫机的重量万一滑落易导致受伤。

Use both hands to hold the machine head when tilting it back or returning it to its original position. If only one hand is used, the weight of the machine head may cause your hand to slip, and your hand may get caught.

## 清洁/Cleaning

⚠ 在开始清洁作业前，请切断电源。如果误踩下踏脚板时，缝纫机动作会导致人员受伤。Turn off the power switch before carrying out cleaning. The machine may operate if the treadle is depressed by mistake, which could result in injury.

⚠ 缝纫机头倒下或竖起时，请用双手进行操作。单手操作时因缝纫机的重量万一滑落易导致受伤。

Use both hands to hold the machine head when tilting it back or returning it to its original position. If only one hand is used, the weight of the machine head may cause your hand to slip, and your hand may get caught.

⊘ 使用润滑油和黄油时，务必戴好保护眼镜和保护手套等，以防润滑油落入眼中或沾在皮肤上，引起发炎。另外，润滑油或黄油不能饮用，否则会引起呕吐和腹泻。将油放在小孩拿不到的地方。 Be sure to wear protective goggles and gloves when handling the lubricating oil and grease ,so that they do not get into your eyes or onto your skin, otherwise inflammation can result. Furthermore, do not drink the oil or eat the grease under any circumstances, as they can cause vomiting and diarrhea. Keep the oil out of the reach of children.

⚠ 用本公司指定更换的零部件。Use only the proper replacement parts as specified by HIKARI.

## 保养和检查/Maintenance and inspection

 只有经过训练的技术人员才能进行缝纫机的维修，保养和检查。Maintenance and inspection of the sewing machine should only be carried out by a qualified technician.

 由顾客擅自改造机器而导致的任何问题本公司不负一切责任。Any problem in machine operation which result from unauthorized modifications to the machine will not be covered by the warranty.

 发生下列情况下，请关闭电源并从电源插座上拔下插头。否则误踩下踏脚板时，缝纫机动作会导致受伤。1.检查、调整或维修。2.更换旋梭等易损坏零部件。Turn off the power switch and disconnect the power cord from the wall outlet at following times, otherwise the machine may operate if the treadle is depressed by mistake, which could result in injury. 1. when carrying out inspection, adjustment and maintenance. 2. when replacing consumable parts such as the rotary hook.

 在必须接上电源开关进行调整时，务必十分小心遵守所有的安全注意事项。If the power switch needs to be left on when carrying out some adjustment, be extremely careful to observe all safety precautions.

 缝纫机头倒下或竖起时，请用双手进行操作。单手操作时因缝纫机的重量万一滑落易导致受伤。

Use both hands to hold the machine head when tilting it back or returning it to its original position. If only one hand is used, the weight of the machine head may cause your hand to slip, and your hand may get caught.

 与电气有关的维修、保养和检查请委托购买商店或电气工作人员进行。Ask your HIKARI dealer or a qualified electrician to carry out any maintenance and inspection of the electrical system.

 取下的安全保护装置，再次安装时，请务必安装在原位上，并检查能否正常的发挥作用。If any safety devices have been removed, be absolutely sure to reinstall them to their original positions and check that they operate correctly before using the machine.

 请使用本公司指定更换的零部件。Use only the proper replacement parts as specified by HIKARI.

## [3].警告标签/Warning labels

缝纫机上有下列警告标签。当使用缝纫机时，请遵守标签上的说明。如果标签说明脱落或模糊不清，请和购买商店联系。

The following warning labels appear on the machine. Please follow the instructions on the labels at all times when using the machine .if labels have been removed or are difficult to read, please contact your nearest HIKARI dealer.

1




安全保护装置/Safety devices

(A)挑线杆防护罩

(B)护指器

(A)Thread take-up cover

(B)Finger guard r

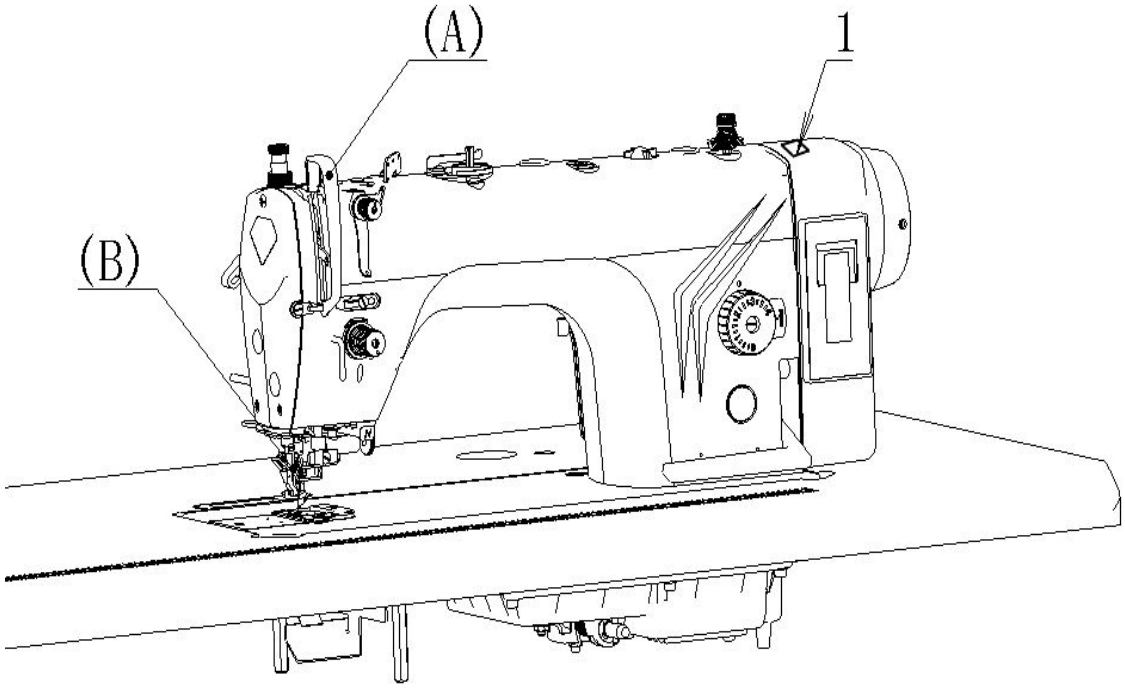

# 目录/Contents

1.规格/Specifications……P1
2.缝纫机的安装/Installation……P2
3.膝控提升高度的调整/Adjusting the height of the knee lifter……P2
4.连接电线/Connecting the cords……P3
5.线架装置的安装/Installing the thread stand……P4
6.加油/Lubrication……P4
7.关于旋梭部油量(迹)调整方法/Adjusting the amount of oil(oil splashes) in the hook……P5
8 机针的安装/Attaching the needle……P6
9.梭心的安装方法/Setting the bobbin into the bobbin case……P7
10.线迹长度的调节/Adjusting the stitch length……P7
11.压脚压力的调节/Presser foot pressure……P7
12.关于压脚提升/Hand lifter……P7
13.压脚杆高度的调整/Adjusting the height of the presser bar……P8
14.上线的穿线方法/Threading the machine head……P8
15.线张力器/Thread tension……P9
16.挑线弹簧/Thread take up stroke……P9
17.挑线杆挑线量的调整/Adjusting the thread take up stroke. ……P10
18.机针与旋梭的关系/Needle to hook relationship ……P10
19.送布牙的高度/height of the feed dog……P11
20.送布牙的倾斜/Tilt of the feed dog……P11
21.送布相位的调节/Adjusting the feed timing……P12
22.踏板压力和行程/Pedal pressure and pedal stroke……P13
23.踏板的调整/Adjustment of the pedal……P13
24.踏板的操作/Pedal operation……P14
25.触键手动倒缝/One touch type reverse feed stitching mechanism……P14
26.切刀/Vertical edge trimmer……P15

## 1. 规格 / SPECIFICATIONS

H9990 □□□□-7□-□□□□

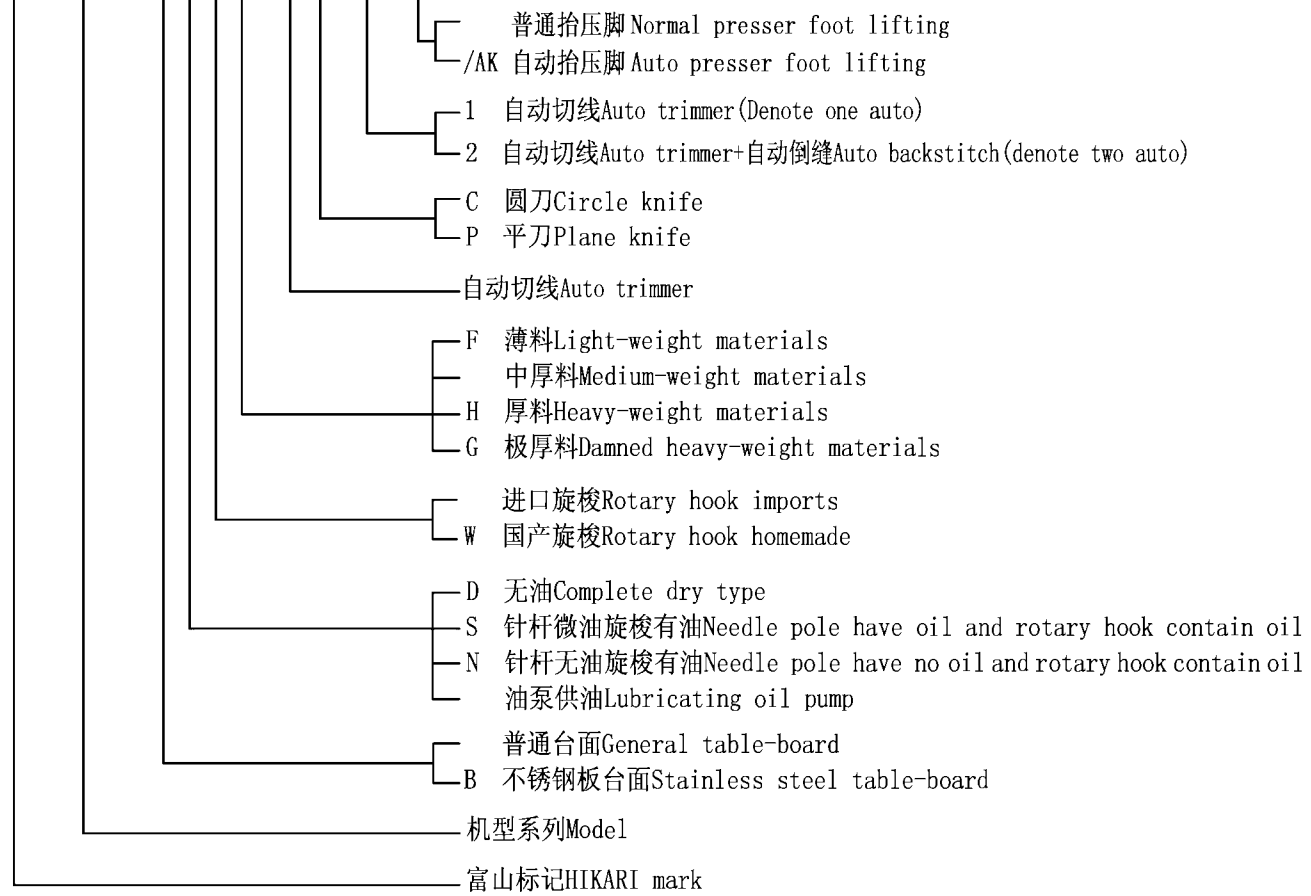


| | H9990-7C |
|---|---|
| 用途 | 中厚料 |
| 缝纫速度(max.) | 4000rpm |
| 最大针距 | 4mm |
| 机针 | DB × 1 #11～#18 |
| 压脚高度（膝动提升） | 10mm（标准）13mm（最大） |
| 使用机油 | 10号白油 |

| | H9990-7C |
|---|---|
| Application | medium-weight materials |
| Sewing speed (max.) | 4000rpm |
| Max. Stitch length | 4mm |
| Needle | DB × 1 #11～#18 |
| Presser foot lift | 10 mm (standard) 13 mm (Max.) |
| Lubricating oil | White Oil 10 |

## 2. 缝纫机的安装 / INSTALLATION

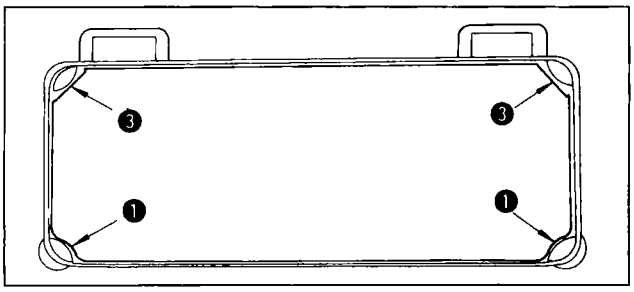

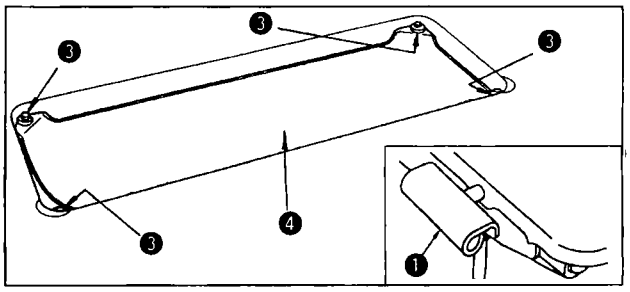

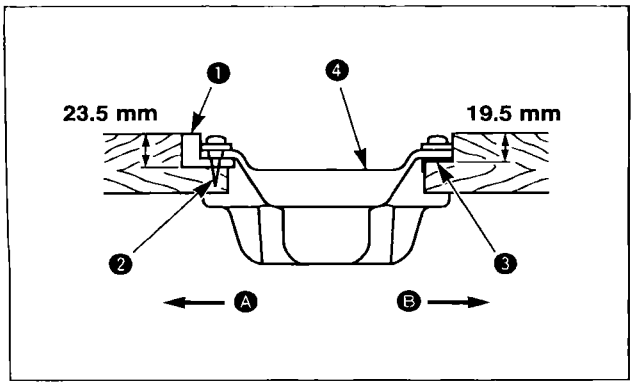


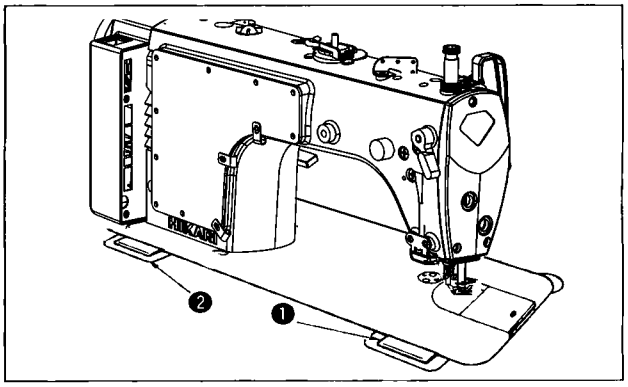

### (1) 底槽的安装

1) 把底槽支到机台沟的四角上。
2) 用螺钉❷把前侧Ⓐ的2个头部橡胶支座❶钉到机台的伸出部，再用螺钉❷把铰链侧Ⓑ的2个头部胶垫座❸钉好固定，然后把底槽❹放上去。
3) 把铰链❶放到机台的孔上，对准台板橡胶支座❷，把头部放到四角的机头胶垫❸上。

### (1) Installing the under cover

1) The oil pan should rest on the four corners of the machine table groove.
2) Fix two rubber seats ❶ on side Ⓐ (operator's side) using nails ❷ as illustrated above. Fix two cushion seats ❸ on side Ⓑ (hinged side) using a rubber-based adhesive. Then place oil pan ❹ on the fixed seats.
3) Fit hinge ❶ into the opening in the machine bed, and fit the machine head to table rubber hinge ❷ before placing the machine head on cushions ❸ on the four corners.

## 3. 膝动提升高度的调整 / ADJUSTING THE HEIGHT OF THE KNEE LIFTER

注意
为了防止意外的起动造成的事故，请关掉电源后进行。
**WARNING :**
**Turn OFF the power before starting the work so as to prevent accidents caused by abrupt start of the sewing machine.**

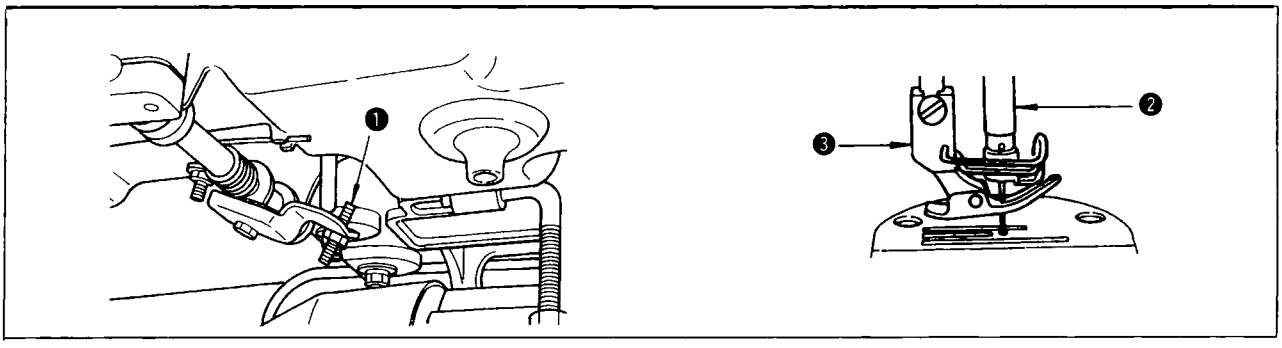

1) 膝动提升的压脚标准高度为10mm。
2) 调节膝动提升调节螺丝❶可以把压脚高度最大调整到13mm。（A型时最大为9mm。）
3) 压脚提升到10mm以上时，请注意针杆❷的前端下降到最低下时，不能碰到压脚❸。

1) The standard height of the presser foot lifted using the knee lifter is 10 mm.
2) You can adjust the presser foot lift up to 13 mm using knee lifter adjust screw ❶. (Max. 9 mm for A type)
3) When you have adjusted the presser foot lift to over 10 mm, be sure that the bottom end of needle bar ❷ in its lowest position does not hit presser foot ❸.

## 4.连接电线/CONNECTING THE CORDS

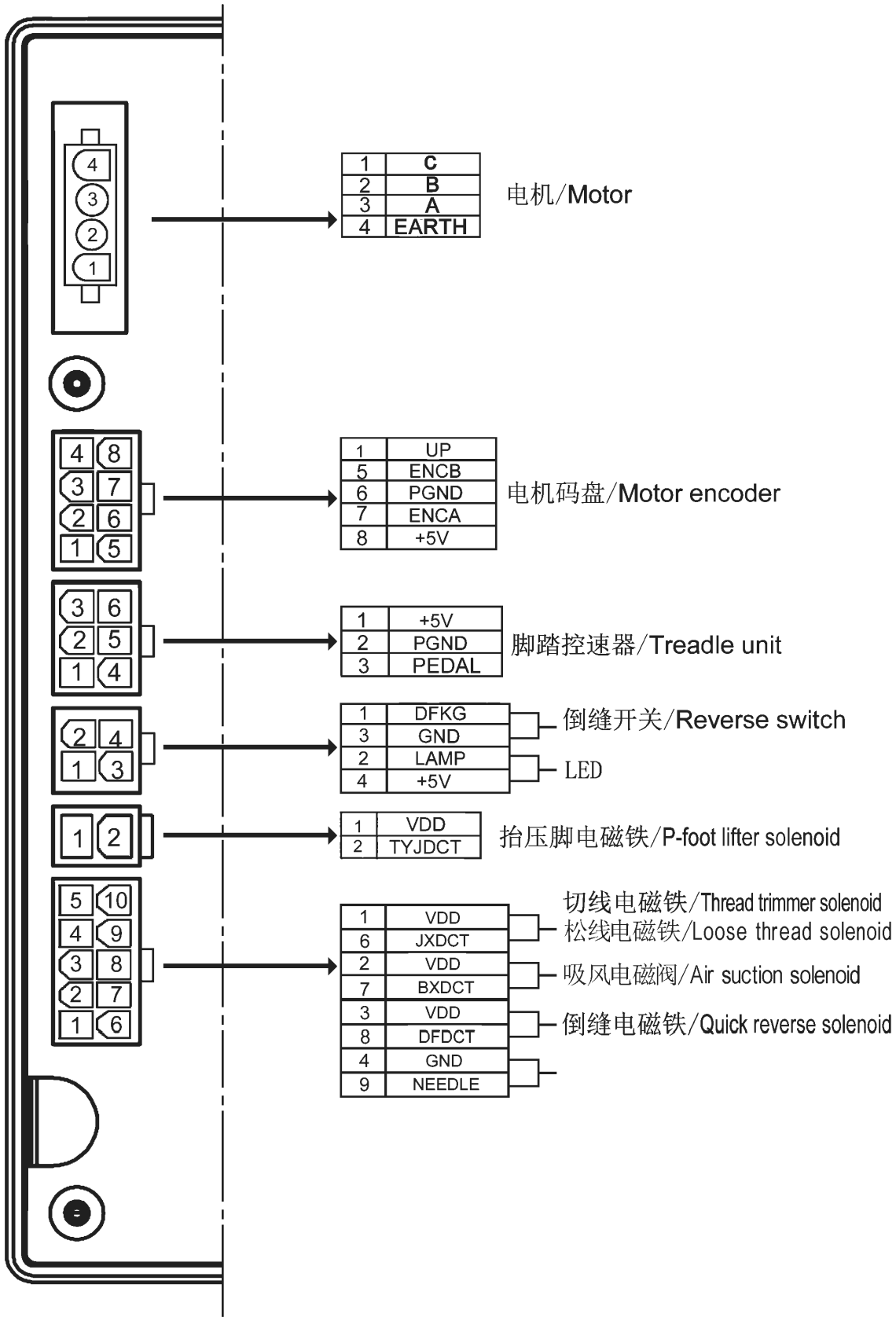

## 5. 线架装置的安装 / INSTALLING THE THREAD STAND

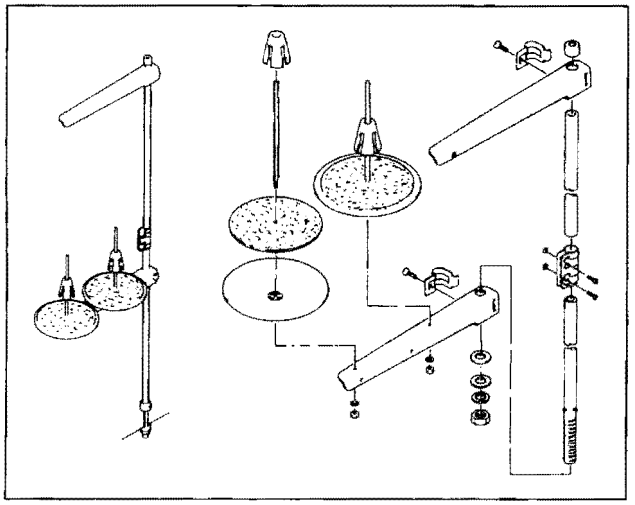

## 6. 加油 / LUBRICATION

注意

为了防止意外的起动造成的事故，请关掉电源后进行。

**WARNING :**

**Turn off the power before starting the work so as to prevent accidents caused by abrupt start of the sewing machine.**

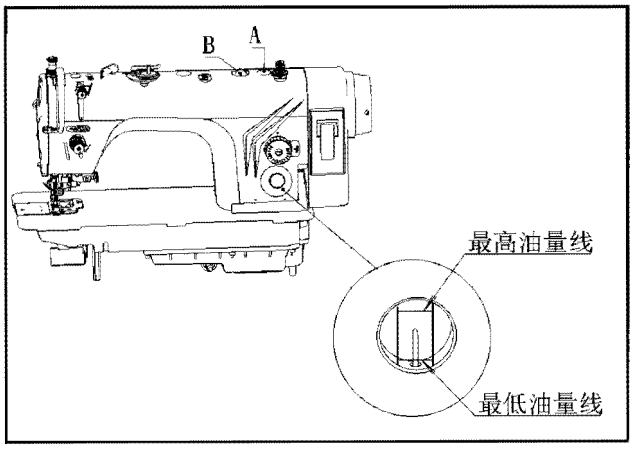


### (1) 运转缝纫机前

1) 请把A孔塞取掉倒入机油，加到最高油量线与最低油量线之间。
2) 油量降到最低油量线后，请再次补充机油。
3) 加油后运转缝纫机，如果润滑正常时，可以通过油窗B看到油的流动。
4) 油流动量的多少与油量的多少无关。

注意　新缝纫机或较长时间没有使用的缝纫机在使用之前，应进行10分钟1500-2500rpm的磨合运转。

Caution **When you first operate your machine after setup or after an extended period of disuse, run your machine at 1,500 to 2,500 rpm. for about 10 minutes for the purpose of break-in.**

## 7. 关于旋梭部油量调整方法\
## ADJUSTING THE AMOUNT OF OIL (OIL SPLASHES) IN THE HOOK

注意
旋梭是以高速运转。为了防止人身事故，调整油量时，请加以充分注意。

**WARNING :**
**Be extremely careful about the operation of the machine since the amount of oil has to be checked by turning the hook at a high speed.**

① 油量确认专用纸
**Amount of oil (oil splashes) confirmation paper**

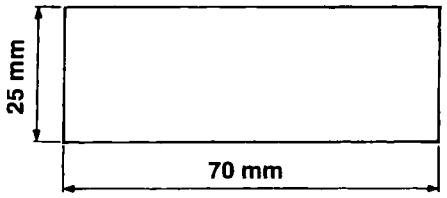


② 油量确认位置
**Position to confirm the amount of oil (oil splashes)**

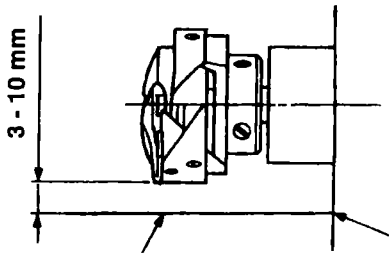


油迹确认专用纸
**Oil splashes confirmation paper**

应顶到接油槽壁
**Closely fit the paper against the wall surface of the bed.**

* 进行下列2)的作业时，请卸下滑板，同时要充分注意手指不要碰到旋梭。
1) 冷机头时，请进行3分钟左右的空运转。（适当的断续运转）
2) 油量确认专用纸在缝纫机转动的状态下插进去。
3) 请确认油量的油面高度应在HOGH和LOW的范围之内。
4) 确认油量所需要的时间为5秒钟。（应看着表）

* When carrying out the procedure described below in 2, remove the slide plate and take extreme caution not to allow your fingers to come in contact with the hook.
1) If the machine has not been sufficiently warmed up for operation, make the machine run idle for approximately three minutes. (Moderate intermittent operation)
2) Place the amount of oil (oil splashes) confirmation paper under the hook while the sewing machine is in operation.
3) Confirm the height of the oil surface in the oil reservoir is within the range between "HIGH" and "LOW".
4) Confirmation of the amount of oil should be completed in five seconds. (Check the period of time with a watch )

• 油量适合标准 / **Sample showing the appropriate amount of oil**

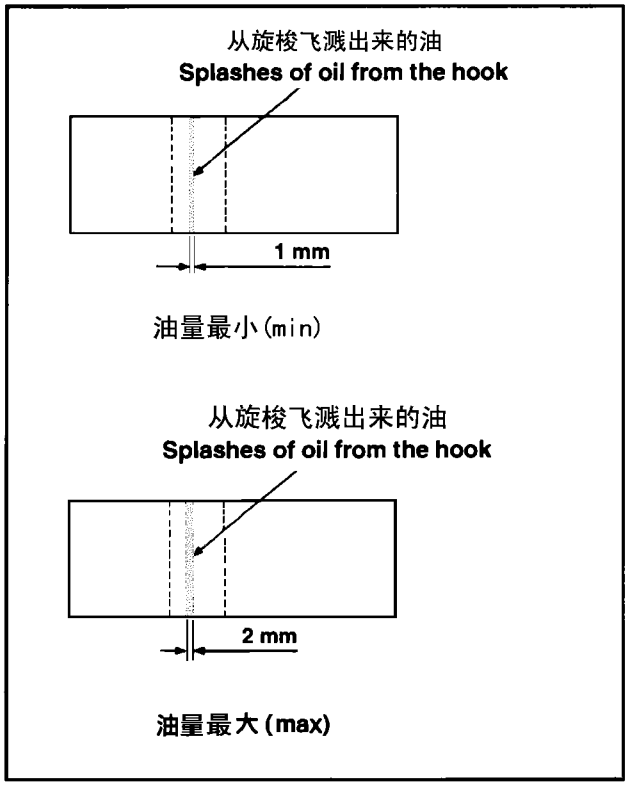


1） 左图标样根据缝制供需需要微调增减，但注意不要过大增加或减少。
（油量过少时，会烧坏旋梭（发热）。油量过多时，会污染缝制品。
2） 油量应确认3次（3张）均无变化。

1) The amount of oil shown in the samples on the left should be finely adjusted in accordance with sewing processes. Be careful not to excessively increase/decrease the amount of oil in the hook. (If the amount of oil is too small, the hook will be seized (the hook will be hot). If the amount of oil is too much, the sewing product may be stained with oil.)
2) Adjust the amount of oil in the hook so that the oil amount (oil splashes) should not change while checking the oil amount three times (on the three sheets of paper).

• 旋梭油量调整 **Adjusting the amount of oil (oil spots) in the hook**

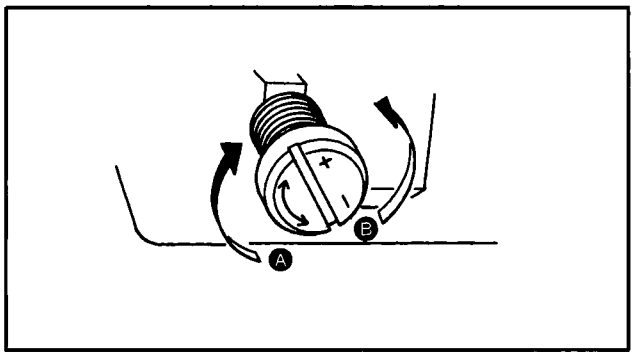


1） 把下轴前端金属部件上的油量调节螺丝向“十”的方向（Ⓐ方向）转动，油量变多，向“一”的方向（Ⓑ方向）转动，油量变少。
2） 油量调节螺丝调整后的油迹，应空运转30秒钟左右进行油量的确认。

1) Turning the oil amount adjustment screw attached on the hook driving shaft front bushing in the “+” direction (in direction Ⓐ) will increase the amount of oil (oil spots) in the hook, or in the “–” direction (in direction Ⓑ) will decrease it.
2) After the amount of oil in the hook has been properly adjusted with the oil amount adjustment screw, make the sewing machine run idle for approximately 30 seconds to check the amount of oil in the hook.

## 8. 机针的安装 / ATTACHING THE NEEDLE

注意
为了防止意外的起动造成的事故，请关掉电源后进行。
**WARNING :**
**Turn OFF the power before starting the work so as to prevent accidents caused by abrupt start of the sewing machine.**

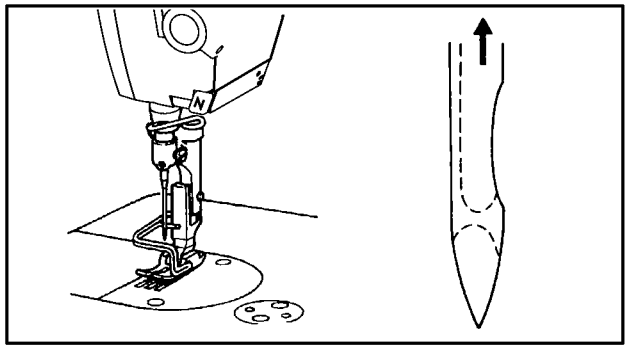

## 9. 梭心的安装方法/ SETTING THE BOBBIN INTO THE BOBBIN CASE

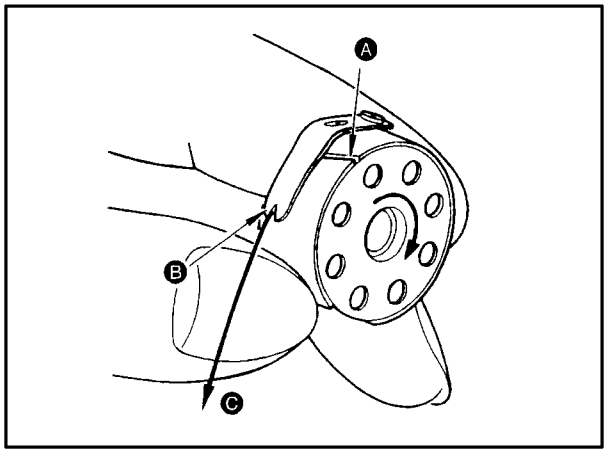


1) 把线穿过梭壳的穿线口Ⓐ，然后把线往Ⓑ方向拉，从线张力弹簧下面的穿线口Ⓑ拉出来。
2) 拉底线Ⓒ，确认梭心是否按箭头方向转动

1) Pass the thread through thread slit Ⓐ, and pull the thread in direction Ⓑ.
   By so doing,the thread will pass under the tension spring and come out from notch Ⓑ.
2) Check that the bobbin rotates in the direction of the arrow when thread Ⓒ is pulled.

## 10.缝迹长度的调节/ ADJUSTING THE STITCH LENGTH

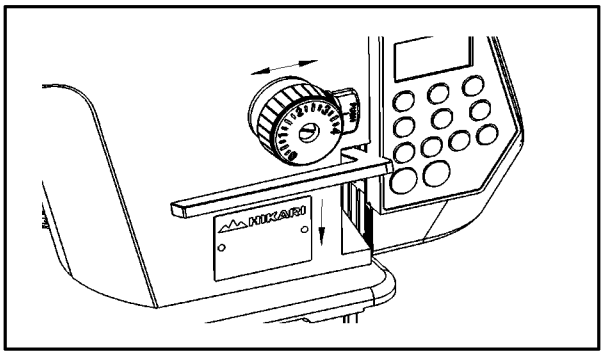

## 11. 压脚压力的调节/ ADJUSTING THE FOOT PRESSURE

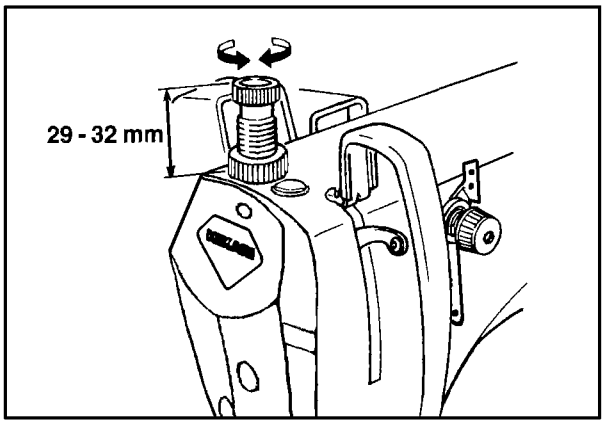


## 12.关于压脚提升 / HAND LIFTER

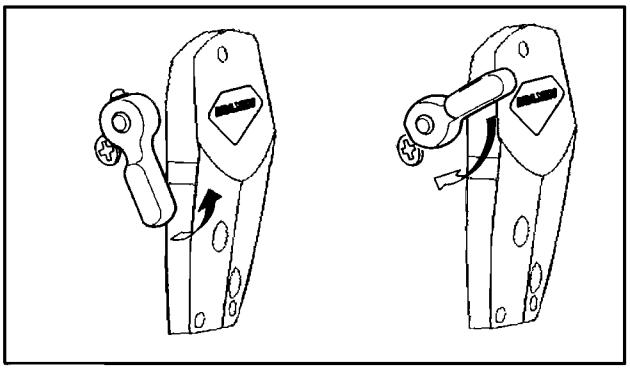

## 13.压脚杆高度的调整 / ADJUSTING THE HEIGHT OF THE PRESSER BAR

注意
为了防止意外的起动造成的事故，请关掉电源后进行。
**WARNING :**
**Turn OFF the power before starting the work so as to prevent accidents caused by abrupt start of the sewing machine.**

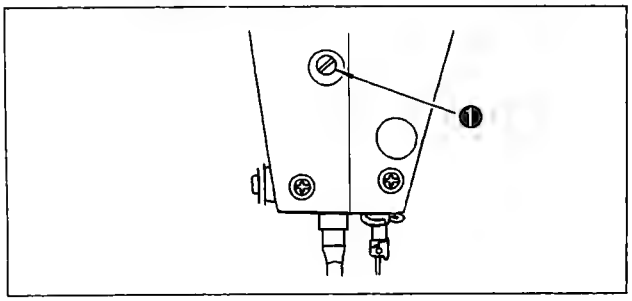


1） 变更压脚杆的高度或压脚的角度时，请拧松压脚杆套管固定螺丝❶进行调整。
2） 调整后，拧紧固定螺丝❶。

1） Loosen setscrew ❶, and adjust the presser bar height or the angle of the presser foot.
2） After adjustment, securely tighten the setscrew ❶

## 14. 上线的穿线方法 / THREADING THE MACHINE HEAD

注意
为了防止意外的起动造成的事故，请关掉电源后进行。
**WARNING :**
**Turn OFF the power before starting the work so as to prevent accidents caused by abrupt start of the sewing machine.**

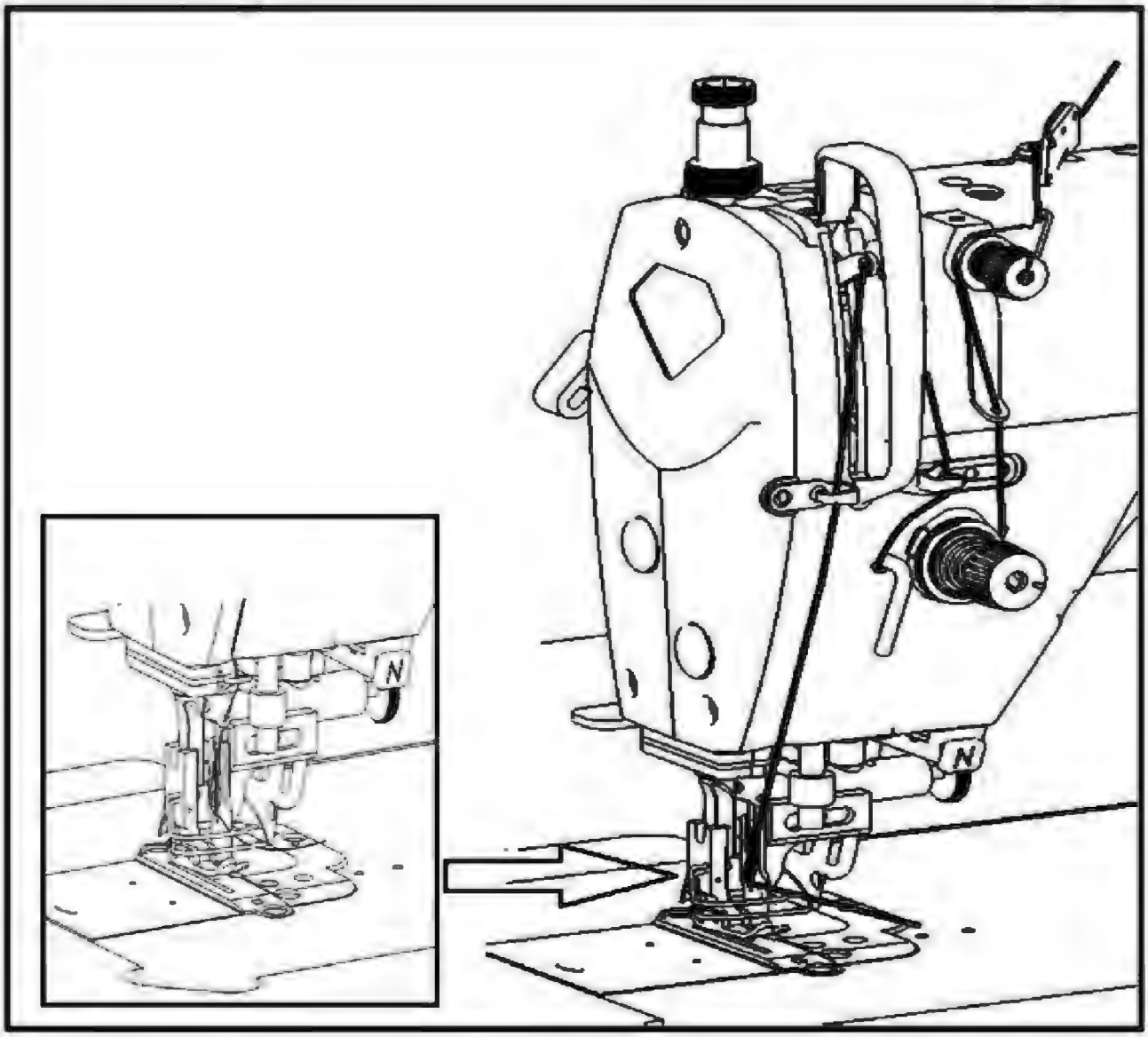

## 15. 线张力器 / THREAD TENSION

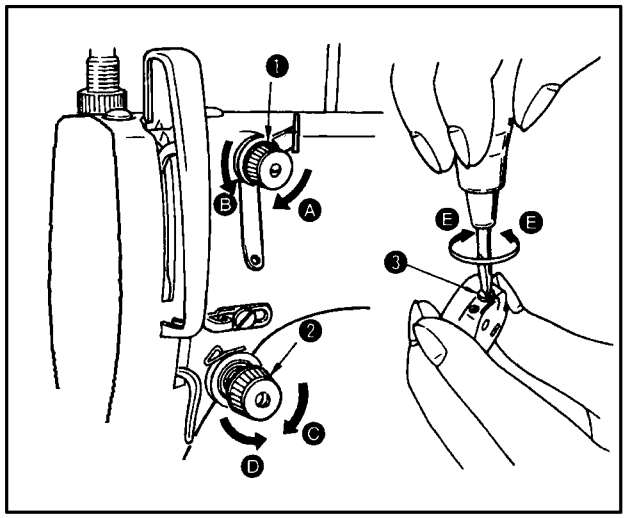


### (1) 上线张力的调整

1) 向右Ⓐ的方向转动第一线张力螺母❶，切线后残留在机针上的线长度变短。
2) 向左Ⓑ的方向转动，则长度变长。
3) 向右Ⓒ的方向转动第二线张力螺母❷，上线张力变强。
4) 向左Ⓓ的方向转动，则上线张力变弱。

### (2) 底线张力的调整

1) 向右Ⓔ的方向转动线张力螺丝❸，底线张力变强。
2) 向左Ⓕ的方向转动线张力螺丝，则底线张力变弱。

### (1) Adjusting the needle thread tension

1) As you turn thread tension No. 1 nut ❶ clockwise (in direction Ⓐ), the thread remaining on the needle after thread trimming will be shorter.
2) As you turn nut ❶ counterclockwise (in direction Ⓑ ), the thread length will be longer.
3) As you turn thread tension No. 2 nut ❷ clockwise (in direction Ⓒ ), the needle thread tension will be increased.
4) As you turn nut ❷ counterclockwise (in direction Ⓓ ), the needle thread tension will be decreased.

### (2) Adjusting the bobbin thread tension

1) As you turn tension adjust screw ❸ clockwise (in direction Ⓔ ), the bobbin thread tension will be increased.
2) As you turn screw ❸ counterclockwise (in direction Ⓕ ), the bobbin thread tension will be decreased.

## 16. 挑线弹簧 / THREAD TAKE-UP SPRING

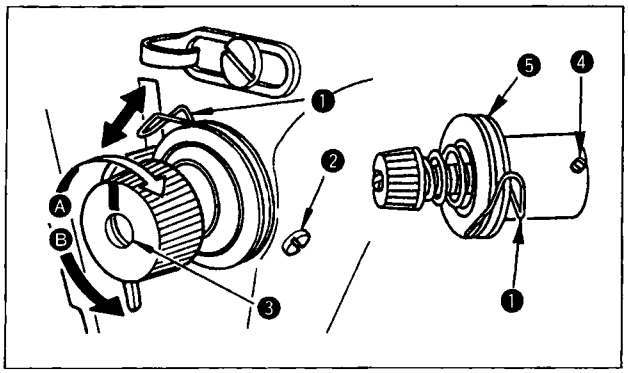


### (1) 挑线弹簧❶的行程量调整

1) 拧松线张力台的固定螺丝❷。
2) 向右Ⓐ的方向转动线张力杆❸，则行程数量变大。
3) 向左Ⓑ的方向转动，则行程量变小。

### (2) 挑线弹簧❶的压力调整

1) 拧松固定螺丝❷，卸下线张力杆❺。
2) 拧松线张力杆固定螺丝❹进行调整。
3) 向右Ⓐ的方向转动线张力杆❸则压力变强。
4) 向左Ⓑ的方向转动则压力变弱。

### (1) Changing the stroke of thread take-up spring ❶

1) Loosen setscrew ❷.
2) As you turn tension post ❸ clockwise (in direction Ⓐ), the stroke of the thread take-up spring will be increased.
3) As you turn the knob counterclockwise (in direction Ⓑ ), the stroke will be decreased.

### (2) Changing the pressure of thread take-up spring ❶

1) Loosen setscrew ❷, and remove thread tension (asm.) ❺.
2) Loosen setscrew ❹.
3) As you turn tension post ❸ clockwise (in direction Ⓐ ), the pressure will be increased.
4) As you turn the post ❸ counterclockwise (in direction Ⓑ ), the pressure will be decreased.

## 17. 挑线杆挑线量的调整 / ADJUSTING THE THREAD TAKE-UP STROKE

注意
为了防止意外的起动造成的事故，请关掉电源后进行。
**WARNING :**
**Turn OFF the power before starting the work so as to prevent accidents caused by abrupt start of the sewing machine.**

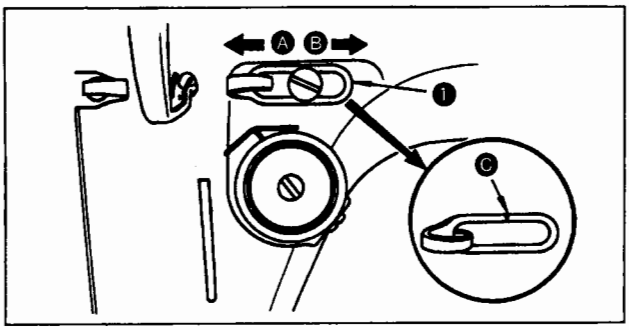


1）缝制厚料时，向左Ⓐ的方向移动线导向器❶，则挑线量变多。
2）缝制薄料时，向右Ⓑ的方向移动线导向器❶，则挑线量变少。
3）线导向器❶在刻线Ⓒ对准螺丝的中心时是标准位置。

1) When sewing heavy-weight materials, move thread guide ❶ to the left (in direction Ⓐ) to increase the length of thread pulled out by the thread take-up.
2) When sewing light-weight materials, move thread guide ❶ to the right (in direction Ⓑ) to decrease the length of thread pulled out by the thread take-up.
3) Normally, thread guide ❶ is positioned in a way that marker line Ⓒ is aligned with the center of the screw.

## 18. 机针与旋梭的关系 / NEEDLE-TO-HOOK RELATIONSHIP

注意
为了防止突然起动成人身事故，请关掉电源，确认马达确实停止转动后再进行。
**WARNING :**
**To avoid possible personal injury due to abrupt start of the machine, turn off the power to the machine and check to be sure that the motor has totally stopped rotating in prior.**

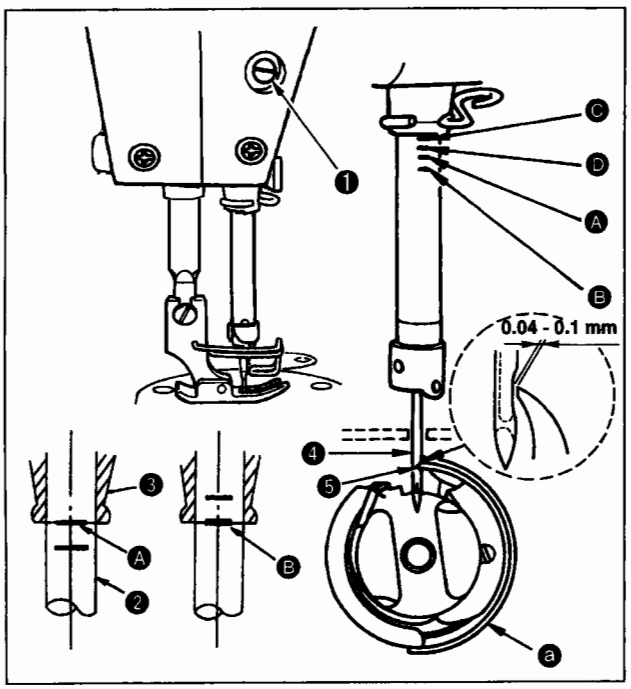


**(1) 请按如下方法调整机针和旋梭。**

1）转动飞轮，让针杆降到最低点，然后拧松针杆套管固定螺钉❶。

（决定针杆高度）

2）【DB针时】
把针杆❷的刻线Ⓐ对准针杆下套筒❸的下端，然后拧紧针杆套管固定螺丝❶。
【DA针时】
把针杆❷的刻线Ⓒ对准针杆下套筒❸的下端，然后拧紧针杆套管固定螺丝❶。

（决定旋梭ⓐ的安装位置）

3）【DB针时】
拧松3个旋梭固定螺丝，转动飞轮上针杆❷上升的方向，把刻线Ⓑ对准针杆下套筒❸的下端。
【DA针时】
拧松3个旋梭国定螺丝，转动飞轮在针杆❷上升的方向，把刻线Ⓓ对准针杆下套筒❸的下端。

4）在此状态下，让旋梭尖❺对准机针❹的中心，把机针与旋梭的间隙调整为0.01-0.1mm（大致），然后拧紧螺丝。

注意　间隙过小的话，会损失旋梭尖。间隙过大的话，会跳针。

### (1) Adjust the timing between the needle and the hook as follows :

1) Turn the handwheel to bright the needle bar down to the lowest point of its stroke, and loosen setscrew ❶.

**(Adjusting the needle bar height)**

2) **(For a DB needle)** Align marker line Ⓐ on needle bar ❷ with the bottom end of needle bar lower bushing ❸, then tighten setscrew ❶.
**(For a DA needle)** Align marker line Ⓒ on needle bar ❷ with the bottom end of needle bar lower bushing ❸, then tighten setscrew ❶.

**(Adjusting position of the hook ⓐ)**

3) **(For a DB needle)** Loosen the three hook setscrews, turn the handwheel and align marker line Ⓑ on ascending needle bar ❷ with the bottom end of needle bar lower bushing ❸.
**(For a DA needle)** Loosen the three hook setscrews, turn the handwheel and align marker line Ⓓ on ascending needle bar ❷ with the bottom end of needle bar lower bushing ❸.

4) After making the adjustments mentioned in the above steps, align hook blade point ❺ with the center of needle ❹. Provide a clearance of 0.04 mm to 0.1 mm (reference value) between the needle and the hook, then securely tighten setscrews in the hook.

**If the clearance between the blade point of hook and the needle is smaller than the specified value, the blade point of hook will be damaged. If the clearance is larger, stitch skipping will result.**

## 19. 送布牙的高度 / HEIGHT OF THE FEED DOG

注意
为了防止意外的起动造成的事故，请关掉电源后进行。
**WARNING :**
**Turn OFF the power before starting the work so as to prevent accidents caused by abrupt start of the sewing machine.**

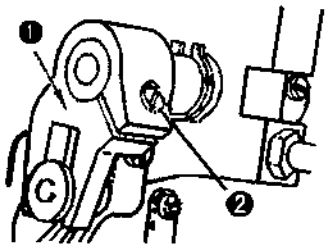


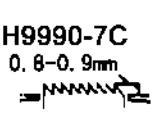


调节送布牙的高度时
① 拧松上下送布交叉❶的紧固螺丝❷。
② 上下移动送布台进行调节。
③ 拧紧固定螺丝❷。

注意 紧固压力过弱的话，交叉部的动作则变得不灵活了。

**If the clamping pressure is insufficient, the motion of the forked portion becomes heavy.**

To adjust the height of the feed dog :
① Loosen screw ❷ of crank ❶.
② Move the feed bar up or down to make adjustment.
③ Securely tighten screw ❷.

## 20. 送布牙的倾斜 / TILT OF THE FEED DOG

注意
为了防止意外的起动造成的事故，请关掉电源后进行。
**WARNING :**
**Turn OFF the power before starting the work so as to prevent accidents caused by abrupt start of the sewing machine.**

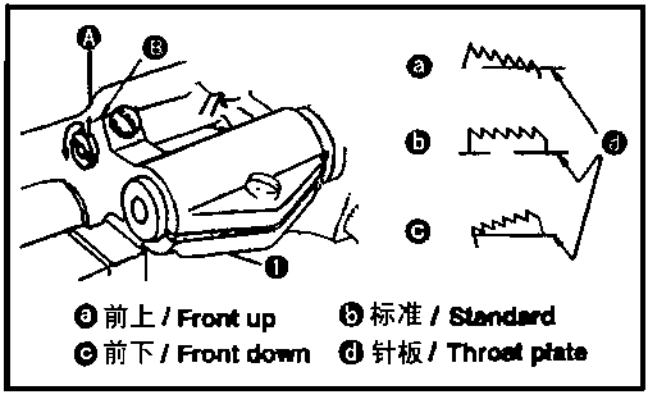


ⓐ 前上 / Front up　ⓑ 标准 / Standard
ⓒ 前下 / Front down　ⓓ 针板 / Throat plate

1）标准倾斜（水平）度时送布台轴的刻点Ⓐ和送布台曲柄❶的Ⓑ部一至时的位置。
(H8900H-7C的标准勤倾斜时对Ⓑ部呈90度水平送布面向轴侧的位置。)

2）为了防止缝制褶皱，向前抬起送布牙时，请拧松固定螺丝，把螺丝刀插入送布台轴，然后沿箭头方向转90度。

3）为了减少布的偏斜，向前下降送布牙时，请与箭头方向相反方向转90度。

注意 调节了送布牙之后，送布牙的高度会有变化，请再次确认。

1) The standard tilt (horizontal) of the feed dog is obtained when marker dot Ⓐ on the feed bar shaft is aligned with marker dot Ⓑ on feed rocker ❶. ( The marker dot Ⓑ inclines forward the feed rocker shaft by 90°, as standard).
2) To tilt the feed dog with its front up in order to prevent puckering, loosen the setscrew, and turn the feed bar shaft 90° in the direction of the arrow, using a screwdriver.
3) To tilt the feed dog with its front down in order to prevent uneven material feed, turn the feed bar shaft 90° in the opposite direction from the arrow.

Caution **Whenever the feed dog tilt is adjusted, the feed dog height will be changed. So, it is necessary to check the height after tilt adjustment.**

## 21. 送布相位的调节 / ADJUSTING THE FEED TIMING

注意
为了防止突然启动造成人身事故，请关掉电源，确认马达停止转动后再进行。
**WARNING :**
**To avoid possible personal injury due to abrupt start of the machine, turn off the power to the machine and check to be sure that the motor has totally stopped rotating in prior.**

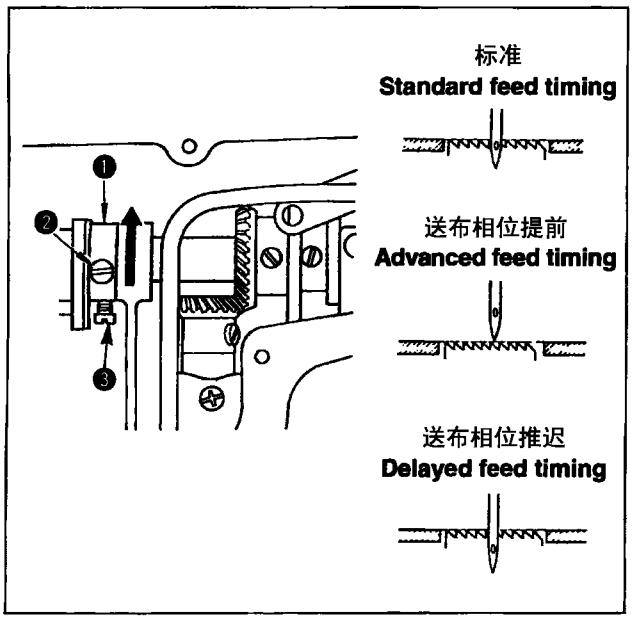


1）拧松送布偏心轮❶的固定螺丝❷、❸，朝箭头方向或反箭头方向移动送布偏心凸轮，然后拧紧固定螺丝。
2）标准调节位置是送布牙从针板下落时，送布牙上面与针孔上端对准针板上面的位置。
3）提早送布相位以防止布偏斜时，请向箭头方向移动送布偏心凸轮。
4）为了良好的紧线而推迟相位时。请逆箭头方向移动偏心凸轮。

注意 移动距离过大会发生断针故障。

1) Loosen screws ❷ and ❸ in feed eccentric cam ❶ , move the feed eccentric cam in the direction of the arrow or opposite direction of the arrow, and firmly tighten the screws.
2) For the standard adjustment, adjust so that the top surface of feed dog and the top end of needle eyelet are flush with the top surface of throat plate when the feed dog descends below the throat plate.
3) To advance the feed timing in order to prevent uneven material feed, move the feed eccentric cam in the direction of the arrow.
4) To delay the feed timing in order to increase stitch tightness, move the feed eccentric cam in the opposite direction from the arrow.

Caution **Be careful not to move the feed eccentric cam too far,or else needle breakage may result.**

## 22. 踏板压力和行程/PEDAL PRESSURE AND PEDAL STROKE

注意
为了防止意外的启动事故，请关掉电源后进行。
**WARNING :**
Turn OFF the power before starting the work so as to prevent accidents caused by abrupt start of the sewing machine.

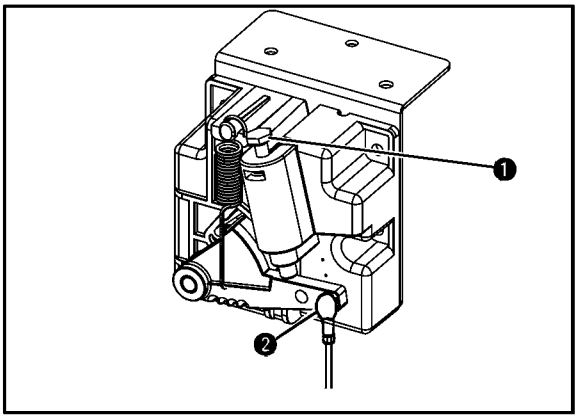


（1）踏板回踩力的调整
1） 用踏板回踩压力调节弹簧❶可以调整。
2） 拧紧调节螺丝则压力变大。
3） 拧松调节螺丝则压力变小。
（2）踏板踩踏行程的调整
1） 把连杆❷插到右侧的孔里之后行程变大。

**(1) Adjusting the pressure required to depress the back part of the pedal**
1) This pressure can be adjusted using regulator screw ❶.
2) The pressure increases as you turn the regulator screw in.
3) The pressure decreases as you turn the screw out.

**(2) Adjusting the pedal stroke**
1) The pedal stroke increases when you insert connecting rod ❷ into the right hole.

## 23. 踏板的调整/ ADJUSTMENT OF THE PEDAL

注意
为了防止意外的启动造成的事故，请关掉电源后进行。
**WARNING :**
Turn OFF the power before starting the work so as to prevent accidents caused by abrupt start of the sewing machine.

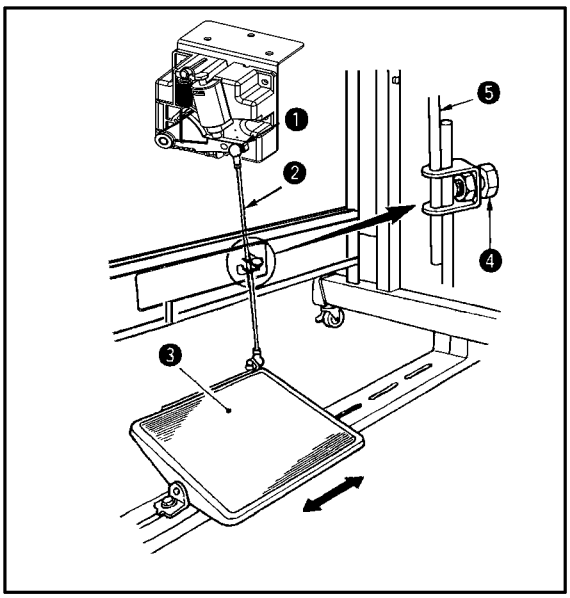


（1）连接杆的安装
1） 向箭头方向移动踏板调节板❸，让踏板拨杆❶和连接杆❷呈一直线。
（2）踏板的角度
1） 调节连接杆的长度就可以自由地改变踏板的倾角度。
2） 拧松调节螺丝❹，拉出插入链接杆❺进行调整。

**(1) Installing the connecting rod**
1) Move pedal ❸ to the right or left as illustrated by the arrow so that motor control lever ❶ and connecting rod ❷ are straightened.

**(2) Adjusting the pedal angle**
1) The pedal tilt can be freely adjusted by changing the length of the connecting rod.
2) Loosen adjust screw ❹, and adjust the length of connecting rod ❺.

## 24. 踏板操作/ PEDAL OPERATION

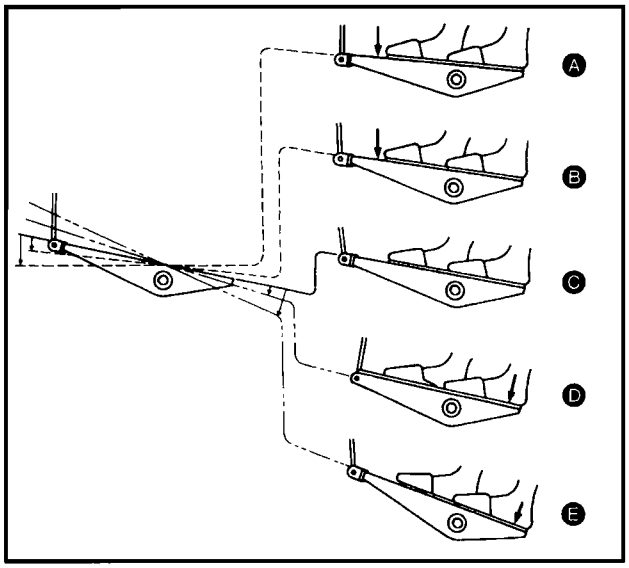


(1) 踏板按4个阶段进行操作。

1) 向前轻轻踩踏板为低速缝制Ⓑ。
2) 再用力向前踩踏板则变为高速缝制Ⓐ。
（但是，开关设定为自动倒缝时，倒缝结束后进行高速缝制）
3) 把踏板返回到脚轻轻地放到踏板上的位置缝纫机停止Ⓒ。（机针上停止或下停止位置）
4) 用力向后踩踏板则为切线动作Ⓔ。

＊ 使用自动压脚提升装置时，在停止 和 切线之间增加1级开关。向后轻轻地踩踏板为压脚提升动作Ⓓ，再往后用力踩踏板为切线动作。

**(1) The pedal is operated in the following four steps :**

1) The machine runs at low sewing speed when you lightly depress the front part of the pedal. Ⓑ
2) The machine runs at high sewing speed when you further depress the front part of the pedal. Ⓐ
(If the automatic reverse feed stitching has been preset, the machine runs at high speed after it completes reverse feed stitching.)
3) The machine stops (with its needle up or down) when you reset the pedal to its original position. Ⓒ
4) The machine trims threads when you fully depress the back part of the pedal. Ⓔ

* If vour machine is provided with the Auto-lifter an addition step is given between the machine stop and thread trimming step. The presser foot goes up when you lightly depress the back part of the pedal Ⓓ, and if you further depress the back part, the thread trimmer is actuated.

## 25. 触键手动倒缝/ ONE-TOUCH TYPE REVERSE FEED STITCHING MECHANISM

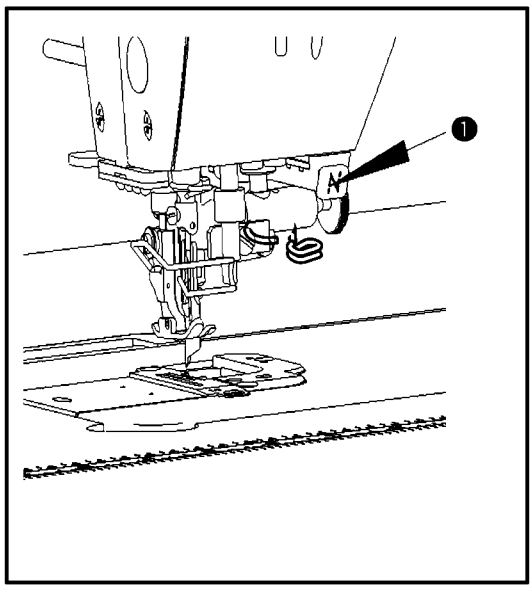


(1) 使用方法

1) 按开关拨杆❶，缝纫机立即变为倒送，进行倒缝。
2) 按下拨杆时，可以进行倒缝。
3) 放开拨杆，则立即返回到正缝。

**(1) How to operate**

1) The moment switch lever ❶ is pressed, the machine performs reverse feed stitching.
2) The machine performs reverse feed stitching as long as the switch lever is held pressed.
3) The machine resumes normal feed stitching the moment the switch lever is released.

## 26.切刀(图7、图8 、图9) / Vertical edge trimmer(Fig.7, Fig.8, Fig.9)

1.切刀的操作：(图7)当要使用切刀时，请按下切刀座①，机器运转时就能驱动切刀运动。要停止使用切刀换成普通平缝时，请拉动切刀离合销旋扭②(按图示方向)，切刀座就弹上，切刀停止动作。要使切刀脱离，请在机器停止后操作。

2.切刀的调整：切刀的调整方法如(图8)所示，切刀运动到最下点时，要调节切刀的A部至针板平面的距离为0~0.5mm。要换刀片时，放松2枚切刀紧固螺钉①即可。

3.切缝宽度的变化：切缝的宽度由针板规格来决定。改变切缝宽度时，也要改变切刀的位置。放松切刀架螺钉②，调正切刀的刃口与针板上刃口相接触，再紧固切刀架螺钉。如果调节切刀平行度，请放松螺钉①(图9)，调节平行直至切布状况良好为止。(H9990标准规格的针板为3.2mm)

1.How to use the trimmer:(Fig.7)When the machine starts running,if the knife positioning plate ① has been pulled duwn, the trimmer is to be under motion: if the running of the conventional lockstitch sewing is desired, pull the knob ② (as shown on Fig.7) in such a way that the trimmer holder ejects from the lower place to the original upper one. Thus the trimmer stops running. The trimmer won't be made to be disengaged from the working condition unless the machine stops.

2.Mounting of the trimmer: Procedure of replacement refers to directions as shown on Fig.8. Only when it has been driven to the lower dead point can part A of the trimmer be adjusted up to the range of 0~0.5 millimetre from the upper surface of the throat plate. Loosen two set screws ① in order to make replacement of the worn-out trimmer.

3.Adjustment of clearance of the trimmer:Clearance of the trimmer for trimming relies upon the specifications of the throat plate. To adjust paraller degree(s) of the throat plate to be replaced, first loosen screw ①(see Fig.9)and then adjust the trimmer to the excellent trimming condition of fabrics. The adjusting proceduce is as follows:

1)Loosen screw ② to make the edges of the throat plate and trimmer come in contact with each other

2) Secure the screw of the trimmer in place. Specified standard of the throat plate for Model H9990 is 3.2mm.

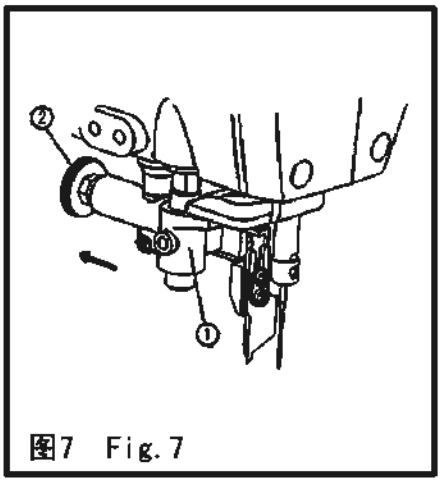

图7 Fig.7

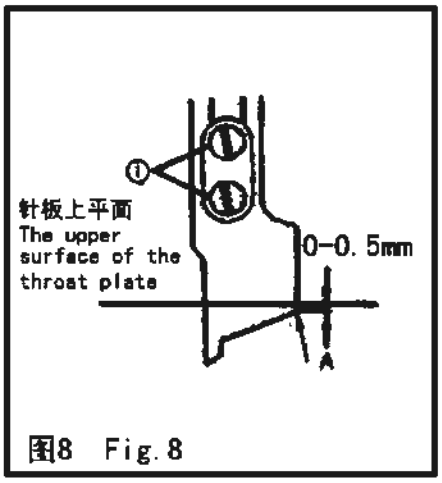

图8 Fig.8

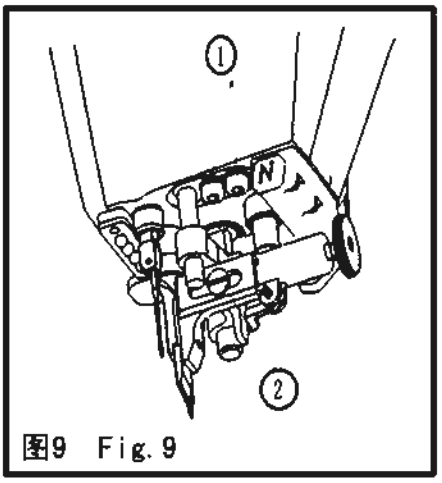

图9 Fig.9