George Fischer Pneumatically Actuated Diaphragm Valve +GF+ DIASTAR Type 025/028



- **All-plastic actuator made of PP-GF**
- **Compact design**
- **Lightweight**
- **Comprehensive line of accessories**
- **Easy replacement of diaphragm**
- **Dimensions 1/2" - 6" (20 - 160 mm)**
- **Valve body made of PVC, CPVC, polypropylene (PP-H), natural polypropylene (PP-n), and PVDF**
- **Dual series actuators for standard and reduced pressures (FC)**

General

If you need to regulate and control neutral or aggressive media, George Fischer has the right valve for you. The +GF+ DIASTAR diaphragm valves represent a line of valves which are trendsetting in construction and design.
State-of-the-art materials technology and manufacturing methods as well as our extensive development know-how warrant excellent quality, longevity, and customer benefit.

Our wide selection of accessories provides solutions for diverse signals or communication between the valve and the user (interface). The outstanding price-performance ratio rounds off the features for this future-oriented product.

Technical Features of the +GF+ DIASTAR

Valve design

1. Visual position indicator
2. All-plastic housing of PP-GF
3. Pre-tensioned (safety) spring sets
4. Stroke spindle accessory of stainless steel
5. Pistons PP-GF (1/2"–2")
6. Diaphragm plate (2-1/2"–6")
7. Control diaphragm (2-1/2"–6")
8. Connection for compressed air
9. Diaphragm EPDM or PTFE
10. Valve body of PVC, CPVC, PP-H (polypropylene), PP-n (natural polypropylene), or PVDF

1/2" - 2"

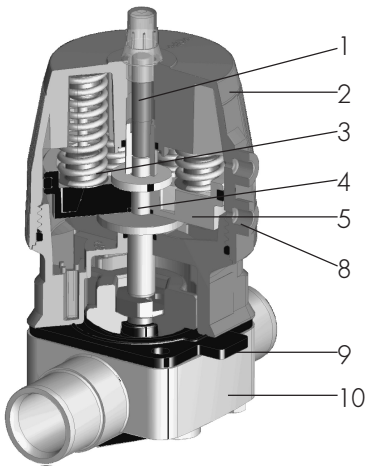

Fail safe to close (FC)

1/2" - 2"

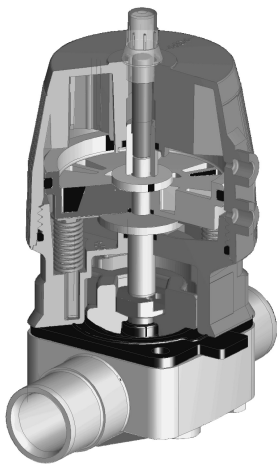

Fail safe to open (FO)

1/2" - 2"

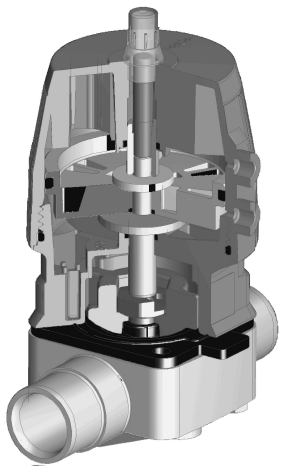

Double acting (DA)

2 1/2" - 6"

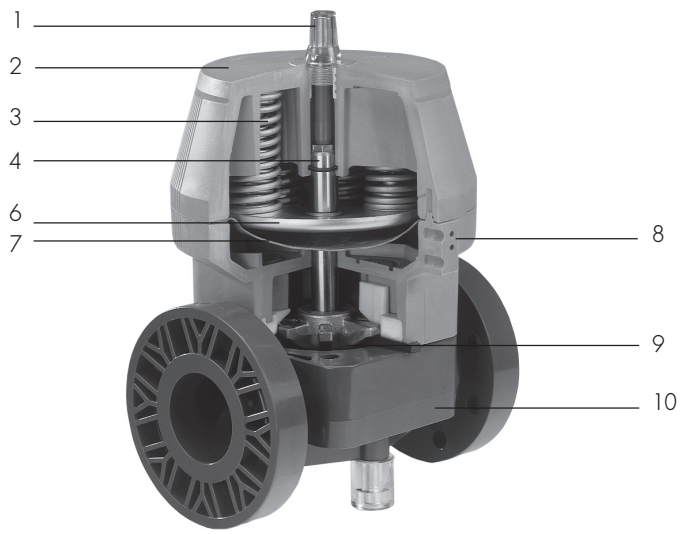

+GF+ DIASTAR Diaphragm Valve

Technical Data of Actuator

Material: PP-GF
Max. ambient temperature: 32°F to 122°F/0°C to 50°C
Control medium:
– Compressed air (oil-free)
– Neutral, non-aggressive gases
– Temperature max. 104°F/40°C

***Max. permissible control pressure:**
– 105 psi/7 bar for fail safe to close (FC)
– 75 psi/5 bar for fail safe to open (FO) and double acting (DA)

*Refer to Pressure Diagrams on next two pages.

Flow Characteristics

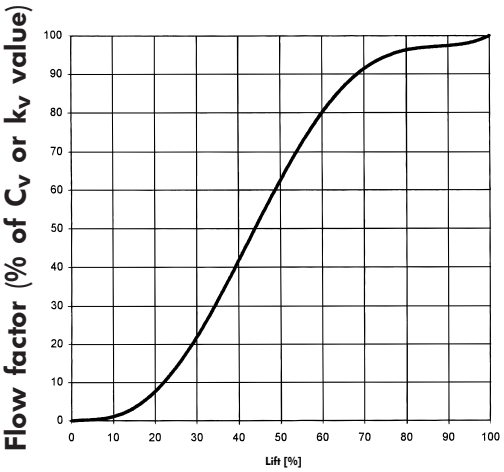

C_V/k_V100 Values

Inch size	OD d mm	ID DN mm	k_V 100	C_V	Lift mm
1/2	20	15	72	5.04	8
3/4	25	20	120	8.40	10
1	32	25	238	16.67	12
1 1/4	40	32	341	23.88	14
1 1/2	50	40	460	32.21	18
2	63	50	685	47.97	22
2 1/2	75	65	992	69.4	28
3	90	80	1700	119	35
4	110	100	2700	189	38
6	160	150	6033	422	38

Sweep Volume

Inch size	FC inch³	FO inch³	1) DA 2) inch³	inch³	OD d mm	OD DN mm
1/2	12.20	4.27	4.27	4.27	20	15
3/4	12.20	13.42	13.42	12.20	25	20
1	24.40	14.03	14.03	13.42	32	25
1-1/4	47.59	26.84	26.84	24.40	40	32
1-1/2	51.86	52.47	52.47	46.98	50	40
2	81.15	92.75	92.75	73.22	63	50
2-1/2 – 3	134.2	268.4	268.4	134.2	75–90	65-80
4 – 6	231.8	463.6	462.6	231.8	110–160	100-150

1) close 2) open

Inch size	FC dm³	FO dm³	1) DA 2) dm³	dm³	OD d mm	OD DN mm
1/2	.20	.07	.07	.07	20	15
3/4	.20	.22	.22	.20	25	20
1	.40	.23	.23	.22	32	25
1-1/4	.78	.44	.44	.40	40	32
1-1/2	.85	.86	.86	.77	50	40
2	1.33	1.52	1.52	1.20	63	50
2-1/2 – 3	2.2	4.4	4.4	2.2	75–90	65-80
4 – 6	3.8	7.6	7.6	3.8	110–160	100-150

1) close 2) open

+GF+ DIASTAR Diaphragm Valve

Control/Operating Pressure Diagrams

1/2" – 2" Type 025

Operating pressure on each side of the valve is 150/135 psi (10/9 bar) except for the 2" FO/DA PTFE valve it is 150/120 psi (10/8 bar).

Fail safe to close (FC) with EPDM diaphragm

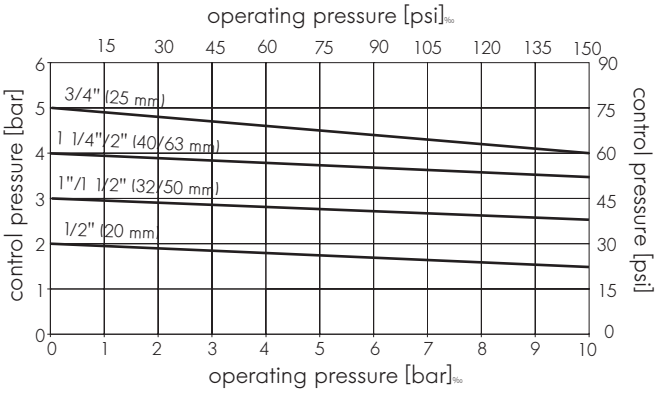

Fail safe to open/Double acting (FO/DA) with EPDM diaphragm

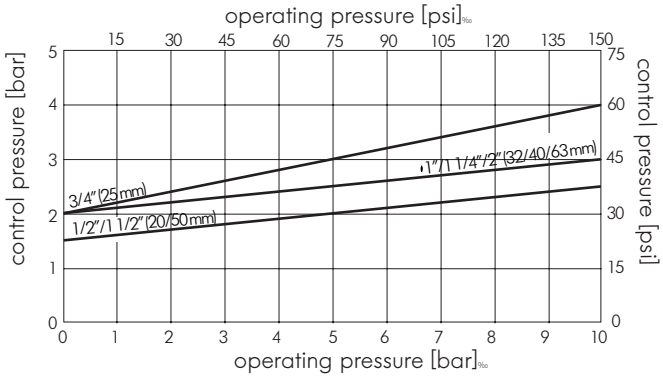

Fail safe to close (FC) with PTFE diaphragm

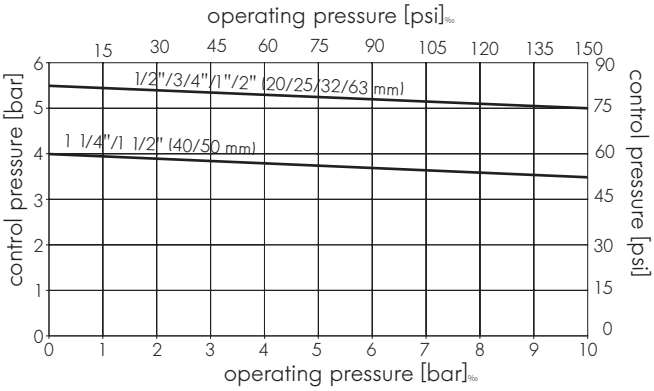

Fail safe to open/double acting (FO/DA) with PTFE diaphragm

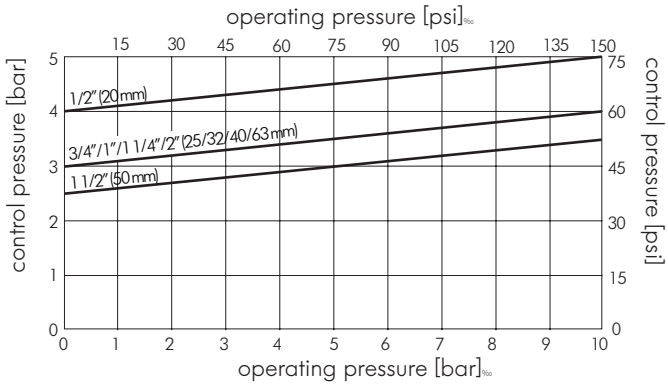

2 1/2" – 6" Type 025

Control pressure max. 105 psi/7 bar
Fail safe to close (FC)

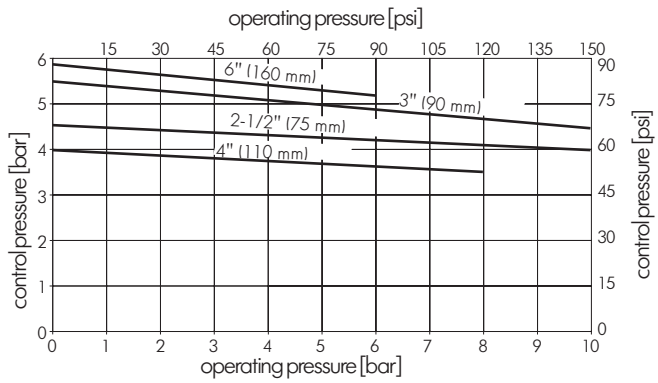

Control pressure max. 75 psi/5 bar
Fail safe to open/double acting (FO/DA)

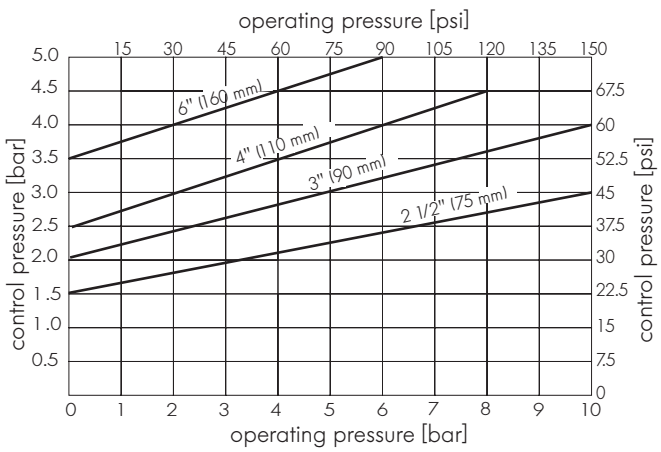

+GF+ DIASTAR Diaphragm Valve

Control/Operating Pressure Diagrams

1/2" – 2" Type 028 (upstream pressure only)

Operating pressure on each side of the valve is 150/0 psi (10/0 bar) except when supplied with PTFE diaphragms where the maximum (upstream) operating pressure is 105 psi (7 bar), 1/2" valve is limited to 75 psi (5 bar).

Fail safe to close (FC) with EPDM diaphragm

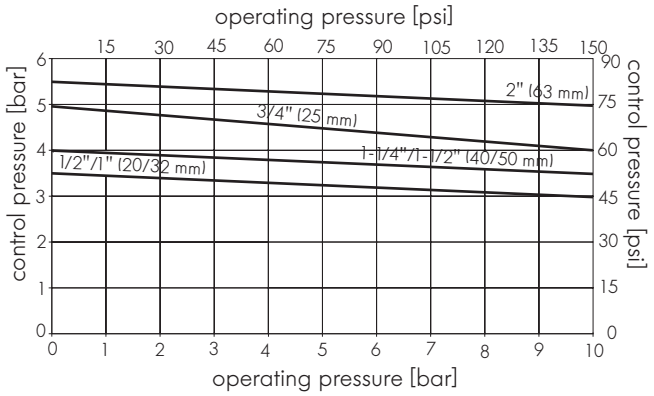

Fail safe to close (FC) with PTFE diaphragm

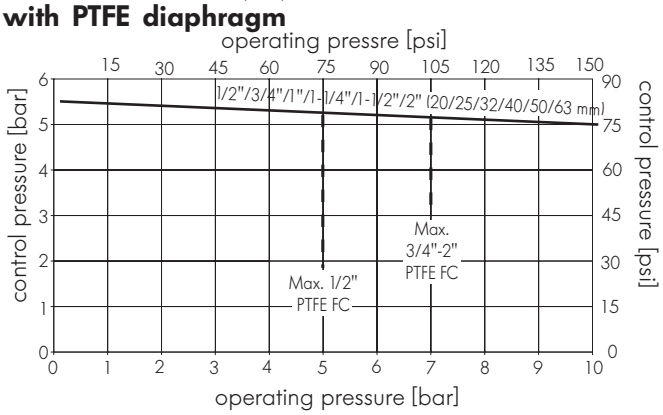

Double Acting (DA) actuated zero-static valve with PTFE diaphragm, 150/0 psi.

Temperature/Pressure Diagram 025/028 (see "Technical Data for Actuated Diaphragm Valves Type 025/028" earlier in Section 11)

Installation Instructions for +GF+ DIASTAR Pneumatically Actuated Diaphragm Valves

Recommended for newly purchased actuated diaphragm valves. Failure to follow these instructions may result in valve leakage which could be time consuming and expensive to correct.

The valve you are about to install was thoroughly checked for performance before it left our factory. **However due to natural relaxation of the diaphragm material, we strongly recommend that the bolt torque be checked prior to installation or immediately prior to pressure testing if the piping installation is under construction for a long period of time.**

1) Ensure that the system is fully drained and free of internal pressure.

2) Actuate valve to the open position to relieve closing force on diaphragm.

3) Hold the lower bolt head with a wrench. Use a torque wrench, with the correct socket, to tighten the nuts on the top of the bonnet to the proper starting torque values (see table).

These values are valid for an installation environment with normal ambient temperatures (20 –25°C).

4) it is important that the four bolts are progressively tightened in a cross pattern to the required torque and that this is done **with the valve open** so the load is evenly distributed upon the diaphragm and valve body.

5) For optimum performance after the first temperature cycle, George Fischer recommends to retighten the bolts to the defined torque (see table). Prior to retightening, follow the instructions above.

Attention: The diaphragms are not to be over-compressed.

* Max. Torque for PTFE diaphragms, only

Bolt Tightening Torques

Metric size d mm	Suggested starting torque inch-lbs.	Max. torque in lbs.*	Socket wrench size mm	F inch	K dia. mm	T depth inch	Inch size
20	22	34		0.98	M6	0.47	1/2
25	27	40	10	0.98	M6	0.47	3/4
32	35	53	10	0.98	M6	0.47	1
40	53	80	13	1.77	M8	0.59	1 1/4
50	89	133	13	1.77	M8	0.59	1 1/2
63	133	204	17	1.77	M8	0.59	2
75	221	221	19	2.76	M8	0.59	2 1/2
90	248	248	19	4.72	M12	0.91	3
110	266	266		4.72	M12	0.91	4
160	354	354		3.94	M12	0.91	6

+GF+ DIASTAR Pneumatically Actuated Diaphragm Valve

Dimensions/Weights 1/2" – 2" Type 025 FC

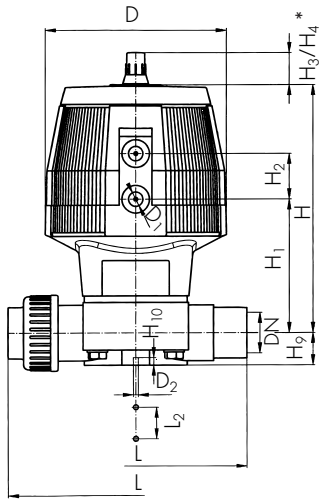

see L[1] through L[9]

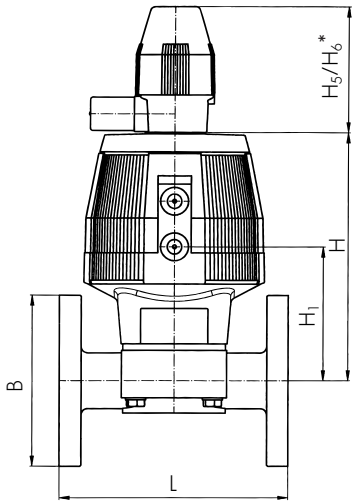

see L[10] through L[11]

DIASTAR with solenoid pilot valve PV 93

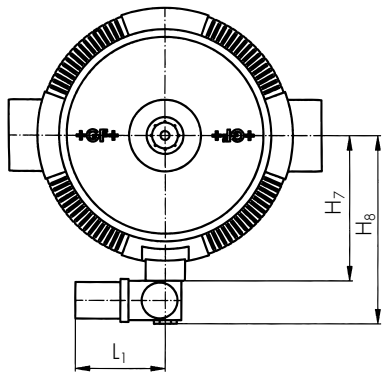

Fail safe to Close (FC)

Inch size	D inch	D_1 G	B PVC/PP/PVDF inch	B CPVC inch	D_2** inch	L[1] inch	L[2] inch	L[3] inch	L[4] inch	L[5] inch	L[6] inch	L[7] inch	L[8] inch	L[9] inch	L[10] inch	L[11] inch	OD d mm	ID DN mm
1/2	3.78	1/8"	3.74	3.50	M6	5.35	5.04	7.72	7.72	8.86	5.62	4.88	4.88	5.24	5.12	5.91	20	15
3/4	3.78	1/8"	4.13	3.88	M6	6.30	5.91	8.70	8.66	9.53	6.30	5.67	5.67	5.67	5.91	6.54	25	20
1	4.72	1/8"	4.53	4.25	M6	6.93	6.38	9.21	9.21	10.00	6.83	6.06	6.06	6.06	6.30	7.09	32	25
1 1/4	5.91	1/4"	5.51	4.63	M8	7.80	7.24	10.24	10.16	12.13	7.40	6.89	6.85	7.83	7.09	7.56	40	32
1 1/2	7.09	1/4"	5.91	5.00	M8	9.13	8.27	11.18	11.18	12.99	8.07	7.60	7.64	8.07	7.87	8.27	50	40
2	7.09	1/4"	6.50	6.00	M8	10.55	9.76	12.64	12.60	14.69	8.86	8.74	8.82	8.82	9.06	9.06	63	50

Inch size	L_1 inch	L_2 inch	H inch	H_1 inch	H_2 inch	H_3 inch	H_4* inch	H_5 inch	H_6* inch	H_7 inch	H_8 inch	H_9 inch	H_{10} inch	OD d mm	ID DN mm
1/2	2.36	.98	4.92	2.70	.98	.89	1.73	3.94	6.10	2.20	3.39	.55	.47	20	15
3/4	2.36	.98	5.00	2.76	.98	.89	1.73	3.94	6.10	2.20	3.46	.69	.47	25	20
1	2.36	.98	6.42	3.66	1.02	1.40	2.52	3.94	6.10	2.66	3.92	.83	.47	32	25
1 1/4	2.36	1.77	7.72	4.15	1.42	1.40	2.52	3.94	6.30	3.35	4.61	1.00	.59	40	32
1 1/2	2.36	1.77	8.94	4.67	1.46	1.40	2.52	3.94	6.69	3.98	5.24	1.28	.59	50	40
2	2.36	1.77	9.49	5.22	1.46	1.40	2.52	3.94	6.69	3.98	5.24	1.54	.59	63	50

* H_4/H_6 = with lift limiter/manual override **metric thread

1) Union ends for solvent cement joining, PVC
2) Union ends for socket fusion joining (mm sizes), PP and PVDF
3) Union ends for butt fusion joining (mm sizes), PP
4) Union ends for butt fusion joining (mm sizes), PVDF
5) Union ends for BCF joining (mm sizes), PVDF
6) Spigot end connections for solvent cement joining (inch sizes), CPVC
7) Spigot end connections for butt and IR fusion (mm sizes), PP
8) Spigot end connections for socket fusion joining and IR ends (mm sizes), PP and PVDF
9) BCF ends (mm sizes), PVDF
10) Loose ring flanges 1/2" - 2 1/2" ; integrally molded, fixed flanges 3" - 6" (PVC, PP, PVDF)
11) Loose ring flanges 1/2" - 2 1/2" ; integrally molded, fixed flanges 3" - 6" (CPVC)

Weight

	Type 025 – FC				
Inch size	PVC lbs.	PP/PP-n lbs.	PVDF lbs.	OD d mm	ID DN mm
1/2	1.76	1.54	1.76	20	15
3/4	1.98	1.76	1.98	25	20
1	3.53	3.09	3.75	32	25
1 1/4	6.39	5.73	6.61	40	32
1 1/2	10.36	9.26	10.80	50	40
2	11.68	9.92	12.57	63	50

+GF+ DIASTAR Pneumatically Actuated Diaphragm Valve

Dimensions/Weights 1/2" – 2" Type 025 FO/DA

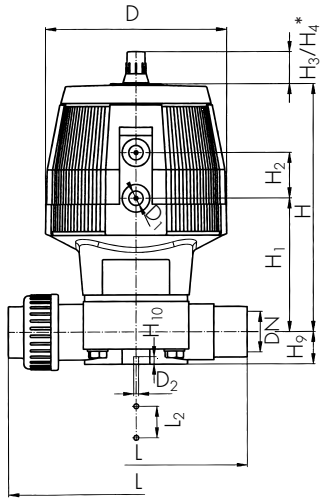

see L[1)] through L[9)]

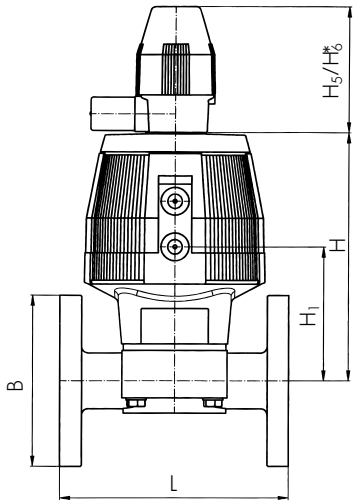

see L[10)] through L[11)]

DIASTAR with solenoid pilot valve PV 93

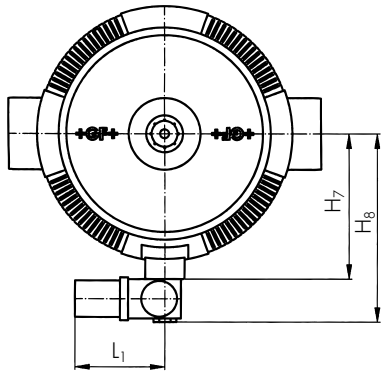

Fail safe to Open/Double Acting (FO/DA)

Inch size	D inch	D_1 G	B PVC/PP/PVDF inch	B CPVC inch	D_2** inch	L[1)] inch	L[2)] inch	L[3)] inch	L[4)] inch	L[5)] inch	L[6)] inch	L[7)] inch	L[8)] inch	L[9)] inch	L[10)] inch	L[11)] inch	OD d mm	ID DN mm
½	2.67	⅛"	3.74	3.50	M6	5.35	5.04	5.12	7.72	8.86	5.62	4.88	4.88	5.24	5.12	5.91	20	15
¾	3.78	⅛"	4.13	3.88	M6	6.30	5.98	5.91	8.66	9.53	6.30	5.67	5.67	5.67	5.91	6.54	25	20
1	3.78	⅛"	4.53	4.25	M6	6.93	6.54	6.30	9.21	10.00	6.83	6.06	6.06	6.06	6.30	7.09	32	25
1¼	4.72	⅛"	5.51	4.63	M8	7.80	7.56	7.09	10.16	12.13	7.40	6.89	6.85	7.83	7.09	7.56	40	32
1½	5.91	¼"	5.91	5.00	M8	9.13	8.74	7.87	11.18	12.99	8.07	7.60	7.64	8.07	7.87	8.27	50	40
2	5.91	¼"	6.50	6.00	M8	10.55	10.47	9.06	12.60	14.69	8.86	8.74	8.82	8.82	9.06	9.06	63	50

Inch size	L_1 inch	L_2 inch	H inch	H_1 inch	H_2 inch	H_3 inch	H_4* inch	H_5 inch	H_6* inch	H_7 inch	H_8 inch	H_9 inch	H_{10} inch	OD d mm	ID DN mm
½	2.36	.98	3.86	2.30	.94	.89	1.73	3.94	6.10	1.71	2.97	.55	.47	20	15
¾	2.36	.98	5.00	2.78	.98	.89	1.73	3.94	6.10	2.20	3.46	.69	.47	25	20
1	2.36	.98	5.55	3.33	.98	.89	1.73	3.94	6.10	2.20	3.46	.83	.47	32	25
1¼	2.36	1.77	6.57	3.82	1.02	1.40	2.52	3.94	6.30	2.66	3.92	1.00	.59	40	32
1½	2.36	1.77	7.80	4.23	1.42	1.40	2.52	3.94	6.69	3.35	4.61	1.28	.59	50	40
2	2.36	1.77	8.50	4.94	1.42	1.40	2.52	3.94	6.69	3.35	4.61	1.54	.59	63	50

* H_4/H_6 = with lift limiter/manual override **metric thread

1) Union ends for solvent cement joining, PVC
2) Union ends for socket fusion joining (mm sizes), PP and PVDF
3) Union ends for butt fusion joining (mm sizes), PP
4) Union ends for butt fusion joining (mm sizes), PVDF
5) Union ends for BCF joining (mm sizes), PVDF
6) Spigot end connections for solvent cement joining (inch sizes), CPVC
7) Spigot end connections for butt and IR fusion (mm sizes), PP
8) Spigot end connections for socket fusion joining and IR ends (mm sizes), PP and PVDF
9) BCF ends (mm sizes), PVDF
10) Loose ring flanges ½" - 2½" ; integrally molded, fixed flanges 3" - 6" (PVC, PP, PVDF)
11) Loose ring flanges ½" - 2½" ; integrally molded, fixed flanges 3" - 6" (CPVC)

Weight

Inch size	Type 025 – FO/DA PVC lbs.	PP/PP-n lbs.	PVDF lbs.	OD d mm	ID DN mm
½	0.88	0.44	0.66	20	15
¾	1.32	1.32	1.54	25	20
1	1.76	1.54	1.98	32	25
1¼	3.31	3.09	3.53	40	32
1½	5.29	3.75	5.95	50	40
2	9.04	6.61	11.46	63	50

+GF+ DIASTAR Pneumatically Actuated Diaphragm Valve

Dimensions/Weights 1/2" – 2" Type 028 FC (Reduced Pressure)

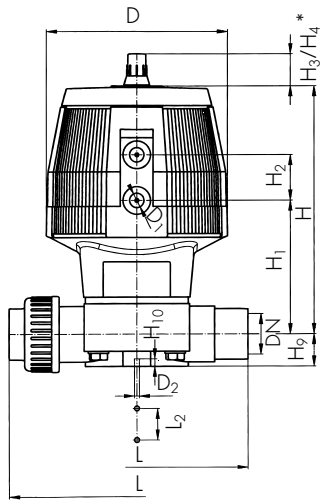

see L[1] through L[9]

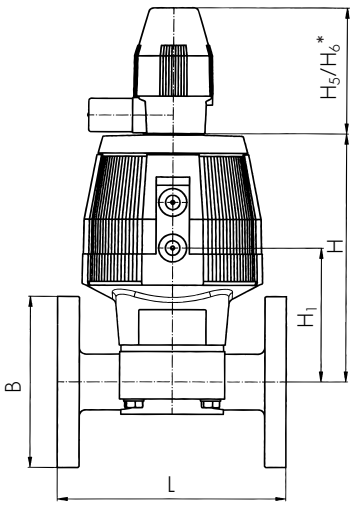

see L[10] through L[11]

DIASTAR with solenoid pilot valve PV 93

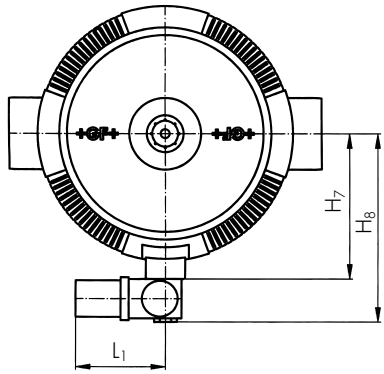

Fail safe to Close (FC)

Inch size	D inch	D_1 G	B PVC/PP/PVDF inch	B CPVC inch	D_2** inch	L[1] inch	L[2] inch	L[3] inch	L[4] inch	L[5] inch	L[6] inch	L[7] inch	L[8] inch	L[9] inch	L[10] inch	L[11] inch	OD d mm	ID DN mm
1/2	2.67	1/8"	3.74	3.50	M6	5.35	5.04	7.72	7.72	8.86	5.62	4.88	4.88	5.24	5.12	5.91	20	15
3/4	3.78	1/8"	4.13	3.88	M6	6.30	5.91	8.70	8.66	9.53	6.30	5.67	5.67	5.67	5.91	6.54	25	20
1	3.78	1/8"	4.53	4.25	M6	6.93	6.38	9.21	9.21	10.00	6.83	6.06	6.06	6.06	6.30	7.09	32	25
1 1/4	4.72	1/8"	5.51	4.63	M8	7.80	7.24	10.24	10.16	12.13	7.40	6.89	6.85	7.83	7.09	7.56	40	32
1 1/2	5.91	1/4"	5.91	5.00	M8	9.13	8.27	11.18	11.18	12.99	8.07	7.60	7.64	8.07	7.87	8.27	50	40
2	5.91	1/4"	6.50	6.00	M8	10.55	9.76	12.64	12.60	14.69	8.86	8.74	8.82	8.82	9.06	9.06	63	50

Inch size	L_1 inch	L_2 inch	H inch	H_1 inch	H_2 inch	H_3 inch	H_4* inch	H_5 inch	H_6* inch	H_7 inch	H_8 inch	H_9 inch	H_{10} inch	OD d mm	ID DN mm
1/2	2.36	.98	3.86	2.30	.94	.89	1.73	3.94	5.91	1.71	2.97	.55	.47	20	15
3/4	2.36	.98	5.00	2.78	.98	.89	1.73	3.94	6.54	2.20	3.46	.69	.47	25	20
1	2.36	.98	5.55	3.33	.98	.89	1.73	3.94	7.09	2.20	3.46	.83	.47	32	25
1 1/4	2.36	1.77	6.57	3.82	1.02	1.40	2.52	3.94	7.56	2.66	3.92	1.00	.59	40	32
1 1/2	2.36	1.77	7.80	4.23	1.42	1.40	2.52	3.94	8.27	3.35	4.61	1.28	.59	50	40
2	2.36	1.77	8.50	4.94	1.42	1.40	2.52	3.94	9.06	3.35	4.61	1.54	.59	63	50

* H_4/H_6 = with lift limiter/manual override **metric thread

1) Union ends for solvent cement joining, PVC
2) Union ends for socket fusion joining (mm sizes), PP and PVDF
3) Union ends for butt fusion joining (mm sizes), PP
4) Union ends for butt fusion joining (mm sizes), PVDF
5) Union ends for BCF joining (mm sizes), PVDF
6) Spigot end connections for solvent cement joining (inch sizes), CPVC
7) Spigot end connections for butt and IR fusion (mm sizes), PP
8) Spigot end connections for socket fusion joining and IR ends (mm sizes), PP and PVDF
9) BCF ends (mm sizes), PVDF
10) Loose ring flanges 1/2" - 2 1/2" ; integrally molded, fixed flanges 3" - 6" (PVC, PP, PVDF)
11) Loose ring flanges 1/2" - 2 1/2" ; integrally molded, fixed flanges 3" - 6" (CPVC)

Weight

Inch size	Type 028 – FC PVC lbs.	PP/PP-n lbs.	PVDF lbs.	OD d mm	ID DN mm
1/2	1.10	0.66	0.88	20	15
3/4	1.98	1.98	1.98	25	20
1	2.43	2.20	2.65	32	25
1 1/4	4.19	3.97	4.63	40	32
1 1/2	7.28	5.73	7.94	50	40
2	10.36	8.60	14.34	63	50

+GF+ DIASTAR Pneumatically Actuated Diaphragm Valve

Dimensions/Weights 2 1/2" – 6"

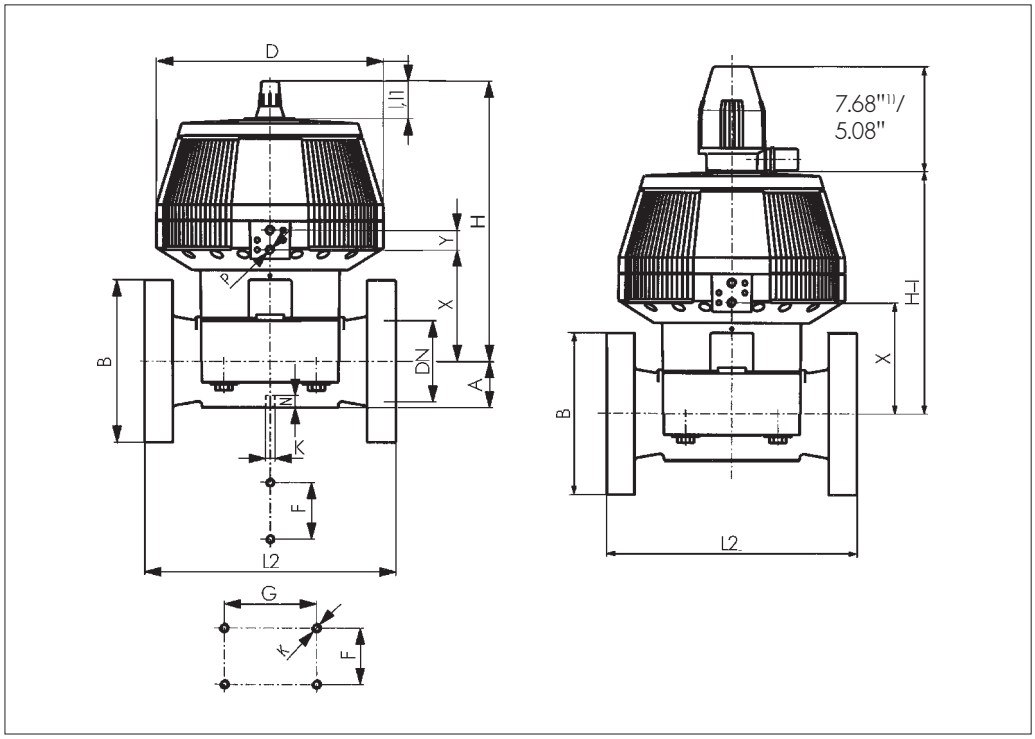

[1] *with Stroke limiter/ Emergency manual override*

Inch size	A inch	B inch	D inch	F inch	G inch	H inch	H1 inch	I inch	I1[1] inch	K mm
2-1/2	1.81	7.28	11.02	2.76	–	13.54	11.73	1.81	3.94	M8
3	2.24	7.87	11.02	4.72	–	13.70	11.89	1.81	3.94	M12
4	2.72	8.86	13.19	4.72	–	15.55	13.74	1.81	3.94	M12
6	4.25	11.22	13.19	3.94	7.87	17.91	16.10	1.81	3.94	M12

** Fail-safe to close function*

L2 inch	N inch	P inch	X inch	Y inch	Weight */lbs PVC	PP	PVDF	OD d mm	ID DN mm
11.42	0.59	1/4	5.83	0.94	29.98	30.20	31.31	75	65
12.20	0.59	1/4	5.91	0.94	38.36	35.27	41.23	90	80
13.78	0.79	1/4	6.93	0.94	54.45	50.26	58.42	110	100
18.90	0.79	1/4	9.33	0.94	77.16	73.63	84.22	160	150

Product Specification +GF+ DIASTAR Diaphragm Valve

Available in 1/2" - 6" sizes in PVC, CPVC, Polypropylene (PP-H), Natural Polypropylene (PP-n) and SYGEF-PVDF valve body materials and EPDM or PTFE/EPDM seals. The actuator housing is glass filled polypropylene, (NEMA 4X or IP 65 corrosion resistance). Available accessories include optional stroke limiter/manual override, limit switches, and 4 - 20mA output for position feedback. Functions shall include Air to Spring (Fail Open or Fail Close) or Air to Air (Double Acting). Contact George Fischer Inc., Tustin, CA 92780 for additional details.

+GF+ DIASTAR Zero Static Diaphragm Valve

Dimensions

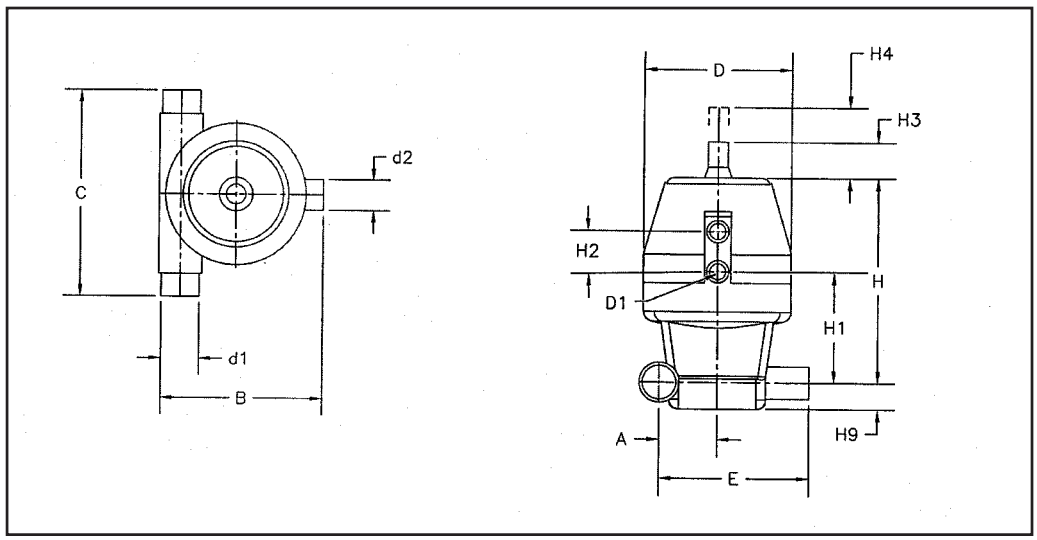

Metric size (d_1 – d_2)	A inch	B inch	C inch	D inch	D1 inch	E inch	H inch	H1 inch	H2 inch	H3 inch	H4* inch	H9 inch	Closest inch size
20 x 20 mm	1.18	4.17	5.51	2.67	G1/8	3.78	3.86	2.30	.94	.89	1.73	.55	1/2 x 1/2
25 x 20 mm	1.42	4.74	5.91	3.78	G1/8	4.25	5.00	2.78	.98	.89	1.73	.69	3/4 x 1/2
25 x 25 mm	1.42	4.74	5.91	3.78	G1/8	4.25	5.00	2.78	.98	.89	1.73	.69	3/4 x 3/4
32 x 20 mm	1.70	5.40	6.30	3.78	G1/8	4.73	5.55	3.33	.98	.89	1.73	.83	1 x 1/2
32 x 25 mm	1.70	5.40	6.30	3.78	G1/8	4.73	5.55	3.33	.98	.89	1.73	.83	1 x 3/4
32 x 32 mm	1.70	5.40	6.30	3.78	G1/8	4.73	5.55	3.33	.98	.89	1.73	.83	1 x 1
40 x 20 mm	1.73	5.00	7.09	3.78	G1/8	4.21	5.55	3.33	.98	.89	1.73	.83	1-1/4 x 1/2
50 x 20 mm	2.22	6.24	7.09	3.78	G1/8	5.26	5.55	3.33	.98	.89	1.73	.83	1-1/2 x 1/2
50 x 25 mm	2.22	6.24	7.09	3.78	G1/8	5.26	5.55	3.33	.98	.89	1.73	.83	1-1/2 x 3/4
50 x 32 mm	2.22	6.24	7.09	3.78	G1/8	5.26	5.55	3.33	.98	.89	1.73	.83	1-1/2 x 1
50 x 40 mm	2.60	7.66	7.87	5.91	G1/4	6.63	7.80	4.23	1.42	1.40	2.52	1.28	1-1/2 x 1-1/4
50 x 50 mm	2.60	7.66	7.87	5.91	G1/4	6.63	7.80	4.23	1.42	1.40	2.52	1.28	1-1/2 x 1-1/2
63 x 20 mm	2.62	6.89	7.09	3.78	G1/8	5.65	5.55	3.33	.98	.89	1.73	.83	2 x 1/2
63 x 25 mm	2.62	6.89	7.09	3.78	G1/8	5.65	5.55	3.33	.98	.89	1.73	.83	2 x 3/4
63 x 32 mm	2.62	6.89	7.09	3.78	G1/8	5.65	5.55	3.33	.98	.89	1.73	.83	2 x 1
63 x 40 mm	3.15	8.84	8.66	5.91	G1/4	7.56	8.50	4.94	1.42	1.40	2.52	1.54	2 x 1-1/4
63 x 50 mm	3.15	8.84	8.66	5.91	G1/4	7.56	8.50	4.94	1.42	1.40	2.52	1.54	2 x 1-1/2
63 x 63 mm	3.15	8.84	8.66	5.91	G1/4	7.56	8.50	4.94	1.42	1.40	2.52	1.54	2 x 2
75 x 40 mm	3.07	8.01	7.48	4.72	G1/8	6.53	6.57	3.82	1.02	1.40	2.52	1.00	2-1/2 x 1-1/4
90 x 20 mm	3.21	8.01	6.30	3.78	G1/8	6.24	5.55	3.33	.98	.89	1.73	.83	3 x 1/2
90 x 25 mm	3.21	8.01	6.30	3.78	G1/8	6.24	5.55	3.33	.98	.89	1.73	.83	3 x 3/4
90 x 32 mm	3.21	8.01	6.30	3.78	G1/8	6.24	5.55	3.33	.98	.89	1.73	.83	3 x 1
90 x 50 mm	3.75	9.93	8.66	5.91	G1/4	8.16	8.50	4.94	1.42	1.40	2.52	1.54	3 x 1-1/2
90 x 63 mm	3.75	9.93	8.66	5.91	G1/4	8.16	8.50	4.94	1.42	1.40	2.52	1.54	3 x 2
110 x 20 mm	3.70	8.90	6.30	3.78	G1/8	6.73	5.55	3.33	.98	.89	1.73	.83	4 x 1/2
110 x 25 mm	3.70	8.90	6.30	3.78	G1/8	6.73	5.55	3.33	.98	.89	1.73	.83	4 x 3/4
110 x 32 mm	3.70	8.90	6.30	3.78	G1/8	6.73	5.55	3.33	.98	.89	1.73	.83	4 x 1
110 x 50 mm	4.25	10.83	8.66	5.91	G1/4	8.66	8.50	4.94	1.42	1.40	2.52	1.54	4 x 1-1/2
110 x 63 mm	4.25	10.83	8.66	5.91	G1/4	8.66	8.50	4.94	1.42	1.40	2.52	1.54	4 x 2

**H4 = with lift limiter/ manual override*

+GF+ DIASTAR Diaphragm Valve Type 025 with Position Indicator

	Inch size	OD d mm	ID DN mm	C_v	k_v	EPDM Part number		PTFE Part number	
						Fail safe to close (FC)			
PVC with solvent cement sockets	1/2	20	15	5.04	72	**199 025 751**		**199 025 771**	
	3/4	25	20	8.40	120	**199 025 752**		**199 025 772**	
	1	32	25	16.67	238	**199 025 753**		**199 025 773**	
	1 1/4	40	32	23.88	341	**199 025 754**		**199 025 774**	
	1 1/2	50	40	32.21	460	**199 025 755**		**199 025 775**	
	2	63	50	47.97	685	**199 025 756**		**199 025 776**	
						Fail safe to open (FO)			
	1/2	20	15	5.04	72	**199 025 757**		**199 025 777**	
	3/4	25	20	8.40	120	**199 025 758**		**199 025 778**	
	1	32	25	16.67	238	**199 025 759**		**199 025 779**	
	1 1/4	40	32	23.88	341	**199 025 760**		**199 025 780**	
	1 1/2	50	40	32.21	460	**199 025 761**		**199 025 781**	
	2	63	50	47.97	685	**199 025 762**		**199 025 782**	
						Double acting (DA)			
	1/2	20	15	5.04	72	**199 025 763**		**199 025 783**	
	3/4	25	20	8.40	120	**199 025 764**		**199 025 784**	
	1	32	25	16.67	238	**199 025 765**		**199 025 785**	
	1 1/4	40	32	23.88	341	**199 025 766**		**199 025 786**	
	1 1/2	50	40	32.21	460	**199 025 767**		**199 025 787**	
	2	63	50	47.97	685	**199 025 768**		**199 025 788**	
						Fail safe to close (FC)			
PVC with PVC loose flange rings 1/2" - 2 1/2"	1/2	20	15	5.04	72	**199 025 791**		**199 025 811**	
	3/4	25	20	8.40	120	**199 025 792**		**199 025 812**	
	1	32	25	16.67	238	**199 025 793**		**199 025 813**	
	1 1/4	40	32	23.88	341	**199 025 794**		**199 025 814**	
	1 1/2	50	40	32.21	460	**199 025 795**		**199 025 815**	
	2	63	50	47.97	685	**199 025 796**		**199 025 816**	
	2 1/2	75	65	69.4	992	**199 025 007**		**199 025 037**	
	3	90	80	119	1700	**199 025 128**		**199 025 158**	
	4	110	100	189	2700	**199 025 009**		**199 025 039**	
	6	160	150	422	6033	**199 025 130**		**NA**	
						Fail safe to open (FO)			
	1/2	20	15	5.04	72	**199 025 797**		**199 025 817**	
	3/4	25	20	8.40	120	**199 025 798**		**199 025 818**	
	1	32	25	16.67	238	**199 025 799**		**199 025 819**	
	1 1/4	40	32	23.88	341	**199 025 800**		**199 025 820**	
	1 1/2	50	40	32.21	460	**199 025 801**		**199 025 821**	
	2	63	50	47.97	685	**199 025 802**		**199 025 822**	
	2 1/2	75	65	69.4	992	**199 025 017**		**199 025 047**	
	3	90	80	119	1700	**199 025 138**		**199 025 168**	
	4	110	100	189	2700	**199 025 019**		**199 025 049**	
	6	160	150	422	6033	**199 025 140**		**199 025 170**	
						Double acting (DA)			
PVC with integrally, molded flanges 3" - 6"	1/2	20	15	5.04	72	**199 025 803**		**199 025 823**	
	3/4	25	20	8.40	120	**199 025 804**		**199 025 824**	
	1	32	25	16.67	238	**199 025 805**		**199 025 825**	
	1 1/4	40	32	23.88	341	**199 025 806**		**199 025 826**	
	1 1/2	50	40	32.21	460	**199 025 807**		**199 025 827**	
	2	63	50	47.97	685	**199 025 808**		**199 025 828**	
	2 1/2	75	65	69.4	992	**199 025 027**		**199 025 057**	
	3	90	80	119	1700	**199 025 148**		**199 025 178**	
	4	110	100	189	2700	**199 025 029**		**199 025 059**	
	6	160	150	422	6033	**199 025 150**		**199 025 180**	

+GF+ DIASTAR Diaphragm Valve Type 025 with Position Indicator



CPVC
with solvent cement spigots

Inch size	OD d mm	ID DN mm	C_v	k_v	EPDM Part number		PTFE Part number	
					Fail safe to close (FC)			
1/2	20	15	5.04	72	**199 025 481**		**199 025 511**	
3/4	25	20	8.40	120	**199 025 482**		**199 025 512**	
1	32	25	16.67	238	**199 025 483**		**199 025 513**	
1 1/4	40	32	23.88	341	**199 025 484**		**199 025 514**	
1 1/2	50	40	32.21	460	**199 025 485**		**199 025 515**	
2	63	50	47.97	685	**199 025 486**		**199 025 516**	
					Fail safe to open (FO)			
1/2	20	15	5.04	72	**199 025 491**		**199 025 521**	
3/4	25	20	8.40	120	**199 025 492**		**199 025 522**	
1	32	25	16.67	238	**199 025 493**		**199 025 523**	
1 1/4	40	32	23.88	341	**199 025 494**		**199 025 524**	
1 1/2	50	40	32.21	460	**199 025 495**		**199 025 525**	
2	63	50	47.97	685	**199 025 496**		**199 025 526**	
					Double acting (DA)			
1/2	20	15	5.04	72	**199 025 501**		**199 025 531**	
3/4	25	20	8.40	120	**199 025 502**		**199 025 532**	
1	32	25	16.67	238	**199 025 503**		**199 025 533**	
1 1/4	40	32	23.88	341	**199 025 504**		**199 025 534**	
1 1/2	50	40	32.21	460	**199 025 505**		**199 025 535**	
2	63	50	47.97	685	**199 025 506**		**199 025 536**	



CPVC
with loose CPVC flange rings

Inch size	OD d mm	ID DN mm	C_v	k_v	EPDM Part number		PTFE Part number	
					Fail safe to close (FC)			
1/2	20	15	5.04	72	**199 025 831**		**199 025 851**	
3/4	25	20	8.40	120	**199 025 832**		**199 025 852**	
1	32	25	16.67	238	**199 025 833**		**199 025 853**	
1 1/4	40	32	23.88	341	**199 025 834**		**199 025 854**	
1 1/2	50	40	32.21	460	**199 025 835**		**199 025 855**	
2	63	50	47.97	685	**199 025 836**		**199 025 856**	
2 1/2	75	65	69.40	992	**199 025 637**		**199 025 667**	
3	90	80	119.00	1700	**199 025 698**		**199 025 728**	
4	110	100	189.00	2700	**199 025 639**		**199 025 669**	
					Fail safe to open (FO)			
1/2	20	15	5.04	72	**199 025 837**		**199 025 857**	
3/4	25	20	8.40	120	**199 025 838**		**199 025 858**	
1	32	25	16.67	238	**199 025 839**		**199 025 859**	
1 1/4	40	32	23.88	341	**199 025 840**		**199 025 860**	
1 1/2	50	40	32.21	460	**199 025 841**		**199 025 861**	
2	63	50	47.97	685	**199 025 842**		**199 025 862**	
2 1/2	75	65	69.40	992	**199 025 647**		**199 025 677**	
3	90	80	119.00	1700	**199 025 708**		**199 025 738**	
4	110	100	189.00	2700	**199 025 649**		**199 025 679**	
					Double acting (DA)			
1/2	20	15	5.04	72	**199 025 843**		**199 025 863**	
3/4	25	20	8.40	120	**199 025 844**		**199 025 864**	
1	32	25	16.67	238	**199 025 845**		**199 025 865**	
1 1/4	40	32	23.88	341	**199 025 846**		**199 025 866**	
1 1/2	50	40	32.21	460	**199 025 847**		**199 025 867**	
2	63	50	47.97	685	**199 025 848**		**199 025 868**	
2 1/2	75	65	69.40	992	**199 025 657**		**199 025 687**	
3	90	80	119.00	1700	**199 025 718**		**199 025 748**	
4	110	100	189.00	2700	**199 025 659**		**199 025 689**	

+GF+ DIASTAR Diaphragm Valve Type 025 with Position Indicator



Polypropylene (PP-H) with fusion spigots ISO/DIN

Inch size	OD d mm	ID DN mm	C_v	k_v	EPDM Part number	PTFE Part number
					Fail safe to close (FC)	
1/2	20	15	5.04	72	**199 025 201**	**199 025 231**
3/4	25	20	8.40	120	**199 025 202**	**199 025 232**
1	32	25	16.67	238	**199 025 203**	**199 025 233**
1 1/4	40	32	23.88	341	**199 025 204**	**199 025 234**
1 1/2	50	40	32.21	460	**199 025 205**	**199 025 235**
2	63	50	47.97	685	**199 025 206**	**199 025 236**
					Fail safe to open (FO)	
1/2	20	15	5.04	72	**199 025 211**	**199 025 241**
3/4	25	20	8.40	120	**199 025 212**	**199 025 242**
1	32	25	16.67	238	**199 025 213**	**199 025 243**
1 1/4	40	32	23.88	341	**199 025 214**	**199 025 244**
1 1/2	50	40	32.21	460	**199 025 215**	**199 025 245**
2	63	50	47.97	685	**199 025 216**	**199 025 246**
					Double acting (DA)	
1/2	20	15	5.04	72	**199 025 221**	**199 025 251**
3/4	25	20	8.40	120	**199 025 222**	**199 025 252**
1	32	25	16.67	238	**199 025 223**	**199 025 253**
1 1/4	40	32	23.88	341	**199 025 224**	**199 025 254**
1 1/2	50	40	32.21	460	**199 025 225**	**199 025 255**
2	63	50	47.97	685	**199 025 226**	**199 025 256**



Polypropylene (PP-H) with IR/butt fusion spigots ISO/DIN

					Fail safe to close (FC)	
1/2	20	15	5.04	72	**199 025 881**	**199 025 901**
3/4	25	20	8.40	120	**199 025 882**	**199 025 902**
1	32	25	16.67	238	**199 025 883**	**199 025 903**
1 1/4	40	32	23.88	341	**199 025 884**	**199 025 904**
1 1/2	50	40	32.21	460	**199 025 885**	**199 025 905**
2	63	50	47.97	685	**199 025 886**	**199 025 906**
					Fail safe to open (FO)	
1/2	20	15	5.04	72	**199 025 887**	**199 025 907**
3/4	25	20	8.40	120	**199 025 888**	**199 025 908**
1	32	25	16.67	238	**199 025 889**	**199 025 909**
1 1/4	40	32	23.88	341	**199 025 890**	**199 025 910**
1 1/2	50	40	32.21	460	**199 025 891**	**199 025 911**
2	63	50	47.97	685	**199 025 892**	**199 025 912**
					Double acting (DA)	
1/2	20	15	5.04	72	**199 025 893**	**199 025 913**
3/4	25	20	8.40	120	**199 025 894**	**199 025 914**
1	32	25	16.67	238	**199 025 895**	**199 025 915**
1 1/4	40	32	23.88	341	**199 025 896**	**199 025 916**
1 1/2	50	40	32.21	460	**199 025 897**	**199 025 917**
2	63	50	47.97	685	**199 025 898**	**199 025 918**

+GF+ DIASTAR Diaphragm Valve Type 025 with Position Indicator



Polypropylene (PP-H)
Union end with fusion sockets
ISO/DIN

Inch size	OD d mm	ID DN mm	C_v	k_v	EPDM Part number		PTFE Part number	
					Fail safe to close (FC)			
1/2	20	15	5.04	72	**199 027 201**		**199 027 231**	
3/4	25	20	8.40	120	**199 027 202**		**199 027 232**	
1	32	25	16.67	238	**199 027 203**		**199 027 233**	
1 1/4	40	32	23.88	341	**199 027 204**		**199 027 234**	
1 1/2	50	40	32.21	460	**199 027 205**		**199 027 235**	
2	63	50	47.97	685	**199 027 206**		**199 027 236**	
					Fail safe to open (FO)			
1/2	20	15	5.04	72	**199 027 211**		**199 027 241**	
3/4	25	20	8.40	120	**199 027 212**		**199 027 242**	
1	32	25	16.67	238	**199 027 213**		**199 027 243**	
1 1/4	40	32	23.88	341	**199 027 214**		**199 027 244**	
1 1/2	50	40	32.21	460	**199 027 215**		**199 027 245**	
2	63	50	47.97	685	**199 027 216**		**199 027 246**	
					Double acting (DA)			
1/2	20	15	5.04	72	**199 027 221**		**199 027 251**	
3/4	25	20	8.40	120	**199 027 222**		**199 027 252**	
1	32	25	16.67	238	**199 027 223**		**199 027 253**	
1 1/4	40	32	23.88	341	**199 027 224**		**199 027 254**	
1 1/2	50	40	32.21	460	**199 027 225**		**199 027 255**	
2	63	50	47.97	685	**199 027 226**		**199 027 256**	



Polypropylene (PP-H)
Union end
with IR/butt fusion spigots
ISO/DIN

					Fail safe to close (FC)			
1/2	20	15	5.04	72	**199 027 431**		**199 027 461**	
3/4	25	20	8.40	120	**199 027 432**		**199 027 462**	
1	32	25	16.67	238	**199 027 433**		**199 027 463**	
1 1/4	40	32	23.88	341	**199 027 434**		**199 027 464**	
1 1/2	50	40	32.21	460	**199 027 435**		**199 027 465**	
2	63	50	47.97	685	**199 027 436**		**199 027 466**	
					Fail safe to open (FO)			
1/2	20	15	5.04	72	**199 027 441**		**199 027 471**	
3/4	25	20	8.40	120	**199 027 442**		**199 027 472**	
1	32	25	16.67	238	**199 027 443**		**199 027 473**	
1 1/4	40	32	23.88	341	**199 027 444**		**199 027 474**	
1 1/2	50	40	32.21	460	**199 027 445**		**199 027 475**	
2	63	50	47.97	685	**199 027 446**		**199 027 476**	
					Double acting (DA)			
1/2	20	15	5.04	72	**199 027 451**		**199 027 481**	
3/4	25	20	8.40	120	**199 027 452**		**199 027 482**	
1	32	25	16.67	238	**199 027 453**		**199 027 483**	
1 1/4	40	32	23.88	341	**199 027 454**		**199 027 484**	
1 1/2	50	40	32.21	460	**199 027 455**		**199 027 485**	
2	63	50	47.97	685	**199 027 456**		**199 027 486**	

+GF+ DIASTAR Diaphragm Valve Type 025 with Position Indicator



Polypropylene (PP-H) with UP-GF loose flange rings ANSI 1/2" - 2 1/2"



Polypropylene (PP-H) with integrally, molded flanges 3" - 6"

Inch Size	OD d mm	ID DN mm	C_v	k_v	Fail safe to close (FC) EPDM Part number		PTFE Part number	
1/2	20	15	5.04	72	**199 025 541**		**199 025 571**	
3/4	25	20	8.40	120	**199 025 542**		**199 025 572**	
1	32	25	16.67	238	**199 025 543**		**199 025 573**	
1 1/4	40	32	23.88	341	**199 025 544**		**199 025 574**	
1 1/2	50	40	32.21	460	**199 025 545**		**199 025 575**	
2	63	50	47.97	685	**199 025 546**		**199 025 576**	
2 1/2	75	65	69.4	992	**199 025 207**		**199 025 237**	
3	90	80	119	1700	**199 025 268**		**199 025 298**	
4	110	100	189	2700	**199 025 209**		**199 025 239**	
6	160	150	422	6033	**199 025 270**		**NA**	
					Fail safe to open (FO)			
1/2	20	15	5.04	72	**199 025 551**		**199 025 581**	
3/4	25	20	8.40	120	**199 025 552**		**199 025 582**	
1	32	25	16.67	238	**199 025 553**		**199 025 583**	
1 1/4	40	32	23.88	341	**199 025 554**		**199 025 584**	
1 1/2	50	40	32.21	460	**199 025 555**		**199 025 585**	
2	63	50	47.97	685	**199 025 556**		**199 025 586**	
2 1/2	75	65	69.4	992	**199 025 217**		**199 025 247**	
3	90	80	119	1700	**199 025 278**		**199 025 308**	
4	110	100	189	2700	**199 025 219**		**199 025 249**	
6	160	150	422	6033	**199 025 280**		**199 025 310**	
					Double acting (DA)			
1/2	20	15	5.04	72	**199 025 561**		**199 025 591**	
3/4	25	20	8.40	120	**199 025 562**		**199 025 592**	
1	32	25	16.67	238	**199 025 563**		**199 025 593**	
1 1/4	40	32	23.88	341	**199 025 564**		**199 025 594**	
1 1/2	50	40	32.21	460	**199 025 565**		**199 025 595**	
2	63	50	47.97	685	**199 025 566**		**199 025 596**	
2 1/2	75	65	69.4	992	**199 025 227**		**199 025 257**	
3	90	80	119	1700	**199 025 288**		**199 025 318**	
4	110	100	189	2700	**199 025 229**		**199 025 259**	
6	160	150	422	6033	**199 025 290**		**199 025 320**	

+GF+ DIASTAR Diaphragm Valve Type 025 with Position Indicator



Natural Polypropylene (PP-n) with BCF/IR fusion spigots

Inch size	OD d mm	ID DN mm	C_v	k_v	EPDM Part number		PTFE Part number	
					Fail safe to close (FC)			
1/2	20	15	5.04	72	**199 027 521**		**199 027 551**	
3/4	25	20	8.40	120	**199 027 522**		**199 027 552**	
1	32	25	16.67	238	**199 027 523**		**199 027 553**	
1 1/4	40	32	23.88	341	**199 027 524**		**199 027 554**	
1 1/2	50	40	32.21	460	**199 027 525**		**199 027 555**	
2	63	50	47.97	685	**199 027 526**		**199 027 556**	
					Fail safe to open (FO)			
1/2	20	15	5.04	72	**199 027 531**		**199 027 561**	
3/4	25	20	8.40	120	**199 027 532**		**199 027 562**	
1	32	25	16.67	238	**199 027 533**		**199 027 563**	
1 1/4	40	32	23.88	341	**199 027 534**		**199 027 564**	
1 1/2	50	40	32.21	460	**199 027 535**		**199 027 565**	
2	63	50	47.97	685	**199 027 536**		**199 027 566**	
					Double acting (DA)			
1/2	20	15	5.04	72	**199 027 541**		**199 027 571**	
3/4	25	20	8.40	120	**199 027 542**		**199 027 572**	
1	32	25	16.67	238	**199 027 543**		**199 027 573**	
1 1/4	40	32	23.88	341	**199 027 544**		**199 027 574**	
1 1/2	50	40	32.21	460	**199 027 545**		**199 027 575**	
2	63	50	47.97	685	**199 027 546**		**199 027 576**	

+GF+ DIASTAR Diaphragm Valve Type 025 with Position Indicator



PVDF
with fusion spigots
ISO/DIN

Inch size	OD d mm	ID DN mm	C_v	k_v			PTFE Part number	
					Fail safe to close (FC)			
1/2	20	15	5.04	72			**199 025 321**	
3/4	25	20	8.40	120			**199 025 322**	
1	32	25	16.67	238			**199 025 323**	
1 1/4	40	32	23.88	341			**199 025 324**	
1 1/2	50	40	32.21	460			**199 025 325**	
2	63	50	47.97	685			**199 025 326**	
					Fail safe to open (FO)			
1/2	20	15	5.04	72			**199 025 331**	
3/4	25	20	8.40	120			**199 025 332**	
1	32	25	16.67	238			**199 025 333**	
1 1/4	40	32	23.88	341			**199 025 334**	
1 1/2	50	40	32.21	460			**199 025 335**	
2	63	50	47.97	685			**199 025 336**	
					Double acting (DA)			
1/2	20	15	5.04	72			**199 025 341**	
3/4	25	20	8.40	120			**199 025 342**	
1	32	25	16.67	238			**199 025 343**	
1 1/4	40	32	23.88	341			**199 025 344**	
1 1/2	50	40	32.21	460			**199 025 345**	
2	63	50	47.97	685			**199 025 346**	



PVDF
with IR/butt fusion spigots
ISO/DIN

Inch size	OD d mm	ID DN mm	C_v	k_v			PTFE Part number	
					Fail safe to close (FC)			
1/2	20	15	5.04	72			**199 027 971**	
3/4	25	20	8.40	120			**199 027 972**	
1	32	25	16.67	238			**199 027 973**	
1 1/4	40	32	23.88	341			**199 027 974**	
1 1/2	50	40	32.21	460			**199 027 975**	
2	63	50	47.97	685			**199 027 976**	
					Fail safe to open (FO)			
1/2	20	15	5.04	72			**199 027 977**	
3/4	25	20	8.40	120			**199 027 978**	
1	32	25	16.67	238			**199 027 979**	
1 1/4	40	32	23.88	341			**199 027 980**	
1 1/2	50	40	32.21	460			**199 027 981**	
2	63	50	47.97	685			**199 027 982**	
					Double acting (DA)			
1/2	20	15	5.04	72			**199 027 983**	
3/4	25	20	8.40	120			**199 027 984**	
1	32	25	16.67	238			**199 027 985**	
1 1/4	40	32	23.88	341			**199 027 986**	
1 1/2	50	40	32.21	460			**199 027 987**	
2	63	50	47.97	685			**199 027 988**	

+GF+ DIASTAR Diaphragm Valve Type 025 with Position Indicator



PVDF
Union end with fusion sockets
ISO/DIN

Inch size	OD d mm	ID DN mm	C_v	k_v			PTFE Part number	
					Fail safe to close (FC)			
1/2	20	15	5.04	72			**199 027 321**	
3/4	25	20	8.40	120			**199 027 322**	
1	32	25	16.67	238			**199 027 323**	
1 1/4	40	32	23.88	341			**199 027 324**	
1 1/2	50	40	32.21	460			**199 027 325**	
2	63	50	47.97	685			**199 027 326**	
					Fail safe to open (FO)			
1/2	20	15	5.04	72			**199 027 331**	
3/4	25	20	8.40	120			**199 027 332**	
1	32	25	16.67	238			**199 027 333**	
1 1/4	40	32	23.88	341			**199 027 334**	
1 1/2	50	40	32.21	460			**199 027 335**	
2	63	50	47.97	685			**199 027 336**	
					Double acting (DA)			
1/2	20	15	5.04	72			**199 027 341**	
3/4	25	20	8.40	120			**199 027 342**	
1	32	25	16.67	238			**199 027 343**	
1 1/4	40	32	23.88	341			**199 027 344**	
1 1/2	50	40	32.21	460			**199 027 345**	
2	63	50	47.97	685			**199 027 346**	



PVDF
Union end with IR/butt fusion spigots

					Fail safe to close (FC)			
1/2	20	15	5.04	72			**199 027 491**	
3/4	25	20	8.40	120			**199 027 492**	
1	32	25	16.67	238			**199 027 493**	
1 1/4	40	32	23.88	341			**199 027 494**	
1 1/2	50	40	32.21	460			**199 027 495**	
2	63	50	47.97	685			**199 027 496**	
					Fail safe to open (FO)			
1/2	20	15	5.04	72			**199 027 501**	
3/4	25	20	8.40	120			**199 027 502**	
1	32	25	16.67	238			**199 027 503**	
1 1/4	40	32	23.88	341			**199 027 504**	
1 1/2	50	40	32.21	460			**199 027 505**	
2	63	50	47.97	685			**199 027 506**	
					Double acting (DA)			
1/2	20	15	5.04	72			**199 027 511**	
3/4	25	20	8.40	120			**199 027 512**	
1	32	25	16.67	238			**199 027 513**	
1 1/4	40	32	23.88	341			**199 027 514**	
1 1/2	50	40	32.21	460			**199 027 515**	
2	63	50	47.97	685			**199 027 516**	

+GF+ DIASTAR Diaphragm Valve Type 025 with Position Indicator



PVDF
with UP-GF loose flange rings
ANSI
1/2" - 2 1/2"



PVDF
with integrally, molded flanges 3" - 6"

Inch size	OD d mm	ID DN mm	C_v	k_v			PTFE Part number	
					Fail safe to close (FC)			
1/2	20	15	5.04	72			**199 025 601**	
3/4	25	20	8.40	120			**199 025 602**	
1	32	25	16.67	238			**199 025 603**	
1 1/4	40	32	23.88	341			**199 025 604**	
1 1/2	50	40	32.21	460			**199 025 605**	
2	63	50	47.97	685			**199 025 606**	
2 1/2	75	65	69.4	992			**199 025 327**	
3	90	80	119	1700			**199 025 358**	
4	110	100	189	2700			**199 025 329**	
6	160	150	422	6033			**NA**	
					Fail safe to open (FO)			
1/2	20	15	5.04	72			**199 025 611**	
3/4	25	20	8.40	120			**199 025 612**	
1	32	25	16.67	238			**199 025 613**	
1 1/4	40	32	23.88	341			**199 025 614**	
1 1/2	50	40	32.21	460			**199 025 615**	
2	63	50	47.97	685			**199 025 616**	
2 1/2	75	65	69.4	992			**199 025 337**	
3	90	80	119	1700			**199 025 368**	
4	110	100	189	2700			**199 025 339**	
6	160	150	422	6033			**199 025 370**	
					Double acting (DA)			
1/2	20	15	5.04	72			**199 025 621**	
3/4	25	20	8.40	120			**199 025 622**	
1	32	25	16.67	238			**199 025 623**	
1 1/4	40	32	23.88	341			**199 025 624**	
1 1/2	50	40	32.21	460			**199 025 625**	
2	63	50	47.97	685			**199 025 626**	
2 1/2	75	65	69.4	992			**199 025 347**	
3	90	80	119	1700			**199 025 378**	
4	110	100	189	2700			**199 025 349**	
6	160	150	422	6033			**199 025 380**	

+GF+ DIASTAR Diaphragm Valve Type 025 with Position Indicator



PVDF-HP
with IR/butt fusion spigots
ISO/DIN

Inch size	OD d mm	ID DN mm	C_v	k_v			PTFE Part number	
					Fail safe to close (FC)			
1/2	20	15	5.04	72			**199 025 971**	
3/4	25	20	8.40	120			**199 025 972**	
1	32	25	16.67	238			**199 025 973**	
1 1/4	40	32	23.88	341			**199 025 974**	
1 1/2	50	40	32.21	460			**199 025 975**	
2	63	50	47.97	685			**199 025 976**	
					Fail safe to open (FO)			
1/2	20	15	5.04	72			**199 025 977**	
3/4	25	20	8.40	120			**199 025 978**	
1	32	25	16.67	238			**199 025 979**	
1 1/4	40	32	23.88	341			**199 025 980**	
1 1/2	50	40	32.21	460			**199 025 981**	
2	63	50	47.97	685			**199 025 982**	
					Double acting (DA)			
1/2	20	15	5.04	72			**199 025 983**	
3/4	25	20	8.40	120			**199 025 984**	
1	32	25	16.67	238			**199 025 985**	
1 1/4	40	32	23.88	341			**199 025 986**	
1 1/2	50	40	32.21	460			**199 025 987**	
2	63	50	47.97	685			**199 025 988**	



PVDF-HP
with BCF fusion spigots

Inch size	OD d mm	ID DN mm	C_v	k_v			PTFE Part number	
					Fail safe to close (FC)			
1/2	20	15	5.04	72			**199 025 381**	
3/4	25	20	8.40	120			**199 025 382**	
1	32	25	16.67	238			**199 025 383**	
1 1/4	40	32	23.88	341			**199 025 384**	
1 1/2	50	40	32.21	460			**199 025 385**	
2	63	50	47.97	685			**199 025 386**	
					Fail safe to open (FO)			
1/2	20	15	5.04	72			**199 025 391**	
3/4	25	20	8.40	120			**199 025 392**	
1	32	25	16.67	238			**199 025 393**	
1 1/4	40	32	23.88	341			**199 025 394**	
1 1/2	50	40	32.21	460			**199 025 395**	
2	63	50	47.97	685			**199 025 396**	
					Double acting (DA)			
1/2	20	15	5.04	72			**199 025 401**	
3/4	25	20	8.40	120			**199 025 402**	
1	32	25	16.67	238			**199 025 403**	
1 1/4	40	32	23.88	341			**199 025 404**	
1 1/2	50	40	32.21	460			**199 025 405**	
2	63	50	47.97	685			**199 025 406**	

+GF+ DIASTAR Diaphragm Valve Type 025 with Position Indicator



PVDF-HP
Union end with
BCF fusion spigots

Inch size	OD d mm	ID DN mm	C_v	k_v			PTFE Part number	
					Fail safe to close (FC)			
1/2	20	15	5.04	72			**199 027 401**	
3/4	25	20	8.40	120			**199 027 402**	
1	32	25	16.67	238			**199 027 403**	
1 1/4	40	32	23.88	341			**199 027 404**	
1 1/2	50	40	32.21	460			**199 027 405**	
2	63	50	47.97	685			**199 027 406**	
					Fail safe to open (FO)			
1/2	20	15	5.04	72			**199 027 411**	
3/4	25	20	8.40	120			**199 027 412**	
1	32	25	16.67	238			**199 027 413**	
1 1/4	40	32	23.88	341			**199 027 414**	
1 1/2	50	40	32.21	460			**199 027 415**	
2	63	50	47.97	685			**199 027 416**	
					Double acting (DA)			
1/2	20	15	5.04	72			**199 027 421**	
3/4	25	20	8.40	120			**199 027 422**	
1	32	25	16.67	238			**199 027 423**	
1 1/4	40	32	23.88	341			**199 027 424**	
1 1/2	50	40	32.21	460			**199 027 425**	
2	63	50	47.97	685			**199 027 426**	



PVDF-HP
with UP-GF loose flange rings
ANSI
1/2" - 2 1/2"



with integrally, molded
flanges 3" - 6"

Inch size	OD d mm	ID DN mm	C_v	k_v			PTFE Part number	
					Fail safe to close (FC)			
1/2	20	15	5.04	72			**199 027 581**	
3/4	25	20	8.40	120			**199 027 582**	
1	32	25	16.67	238			**199 027 583**	
1 1/4	40	32	23.88	341			**199 027 584**	
1 1/2	50	40	32.21	460			**199 027 585**	
2	63	50	47.97	685			**199 027 586**	
2 1/2	75	65	69.4	992			**199 025 387**	
3	90	80	119	1700			**199 025 448**	
4	110	100	189	2700			**199 025 389**	
6	160	150	422	6033			**N/A**	
					Fail safe to open (FO)			
1/2	20	15	5.04	72			**199 027 591**	
3/4	25	20	8.40	120			**199 027 592**	
1	32	25	16.67	238			**199 027 593**	
1 1/4	40	32	23.88	341			**199 027 594**	
1 1/2	50	40	32.21	460			**199 027 595**	
2	63	50	47.97	685			**199 027 596**	
2 1/2	75	65	69.4	992			**199 025 397**	
3	90	80	119	1700			**199 025 458**	
4	110	100	189	2700			**199 025 399**	
6	160	150	422	6033			**199 025 460**	
					Double acting (DA)			
1/2	20	15	5.04	72			**199 027 601**	
3/4	25	20	8.40	120			**199 027 602**	
1	32	25	16.67	238			**199 027 603**	
1 1/4	40	32	23.88	341			**199 027 604**	
1 1/2	50	40	32.21	460			**199 027 605**	
2	63	50	47.97	685			**199 027 606**	
2 1/2	75	65	69.4	992			**199 025 407**	
3	90	80	119	1700			**199 025 468**	
4	110	100	189	2700			**199 025 409**	
6	160	150	422	6033			**199 025 470**	

+GF+ DIASTAR Diaphragm Valve Type 028 with Position Indicator



PVC with solvent cement sockets

Inch size	OD d mm	ID DN mm	C_v	k_v	Fail safe to close (FC) EPDM Part number		PTFE Part number	
1/2	20	15	5.04	72	**199 028 081**		**199 028 111**	
3/4	25	20	8.40	120	**199 028 082**		**199 028 112**	
1	32	25	16.67	238	**199 028 083**		**199 028 113**	
1 1/4	40	32	23.88	341	**199 028 084**		**199 028 114**	
1 1/2	50	40	32.21	460	**199 028 085**		**199 028 115**	
2	63	50	47.97	685	**199 028 086**		**199 028 116**	



PVC with loose PVC flange rings

Inch size	OD d mm	ID DN mm	C_v	k_v	Fail safe to close (FC) EPDM Part number		PTFE Part number	
1/2	20	15	5.04	72	**199 028 131**		**199 028 161**	
3/4	25	20	8.40	120	**199 028 132**		**199 028 162**	
1	32	25	16.67	238	**199 028 133**		**199 028 163**	
1 1/4	40	32	23.88	341	**199 028 134**		**199 028 164**	
1 1/2	50	40	32.21	460	**199 028 135**		**199 028 165**	
2	63	50	47.97	685	**199 028 136**		**199 028 166**	



CPVC with solvent cement spigots

Inch size	OD d mm	ID DN mm	C_v	k_v	Fail safe to close (FC) EPDM Part number		PTFE Part number	
1/2	20	15	5.04	72	**199 028 141**		**199 028 171**	
3/4	25	20	8.40	120	**199 028 142**		**199 028 172**	
1	32	25	16.67	238	**199 028 143**		**199 028 173**	
1 1/4	40	32	23.88	341	**199 028 144**		**199 028 174**	
1 1/2	50	40	32.21	460	**199 028 145**		**199 028 175**	
2	63	50	47.97	685	**199 028 146**		**199 028 176**	



CPVC with loose CPVC flange rings

Inch size	OD d mm	ID DN mm	C_v	k_v	Fail safe to close (FC) EPDM Part number		PTFE Part number	
1/2	20	15	5.04	72	**199 028 831**		**199 028 851**	
3/4	25	20	8.40	120	**199 028 832**		**199 028 852**	
1	32	25	16.67	238	**199 028 833**		**199 028 853**	
1 1/4	40	32	23.88	341	**199 028 834**		**199 028 854**	
1 1/2	50	40	32.21	460	**199 028 835**		**199 028 855**	
2	63	50	47.97	685	**199 028 836**		**199 028 856**	

+GF+ DIASTAR Diaphragm Valve Type 028 with Position Indicator



Polypropylene (PP-H)
with fusion spigots
ISO/DIN

Inch size	OD d mm	ID DN mm	C_v	k_v	Fail safe to close (FC) EPDM Part number		PTFE Part number	
1/2	20	15	5.04	72	**199 028 201**		**199 028 231**	
3/4	25	20	8.40	120	**199 028 202**		**199 028 232**	
1	32	25	16.67	238	**199 028 203**		**199 028 233**	
1 1/4	40	32	23.88	341	**199 028 204**		**199 028 234**	
1 1/2	50	40	32.21	460	**199 028 205**		**199 028 235**	
2	63	50	47.97	685	**199 028 206**		**199 028 236**	



Polypropylene (PP-H)
with IR/butt fusion spigots
ISO/DIN

Inch size	OD d mm	ID DN mm	C_v	k_v	Fail safe to close (FC) EPDM Part number		PTFE Part number	
1/2	20	15	5.04	72	**199 028 881**		**199 028 901**	
3/4	25	20	8.40	120	**199 028 882**		**199 028 902**	
1	32	25	16.67	238	**199 028 883**		**199 028 903**	
1 1/4	40	32	23.88	341	**199 028 884**		**199 028 904**	
1 1/2	50	40	32.21	460	**199 028 885**		**199 028 905**	
2	63	50	47.97	685	**199 028 886**		**199 028 906**	



Polypropylene (PP-H)
Union end with fusion sockets
ISO/DIN

Inch size	OD d mm	ID DN mm	C_v	k_v	Fail safe to close (FC) EPDM Part number		PTFE Part number	
1/2	20	15	5.04	72	**199 028 181**		**199 028 187**	
3/4	25	20	8.40	120	**199 028 182**		**199 028 188**	
1	32	25	16.67	238	**199 028 183**		**199 028 189**	
1 1/4	40	32	23.88	341	**199 028 184**		**199 028 190**	
1 1/2	50	40	32.21	460	**199 028 185**		**199 028 191**	
2	63	50	47.97	685	**199 028 186**		**199 028 192**	



Polypropylene (PP-H)
Union end with IR/butt fusion spigots
ISO/DIN

Inch size	OD d mm	ID DN mm	C_v	k_v	Fail safe to close (FC) EPDM Part number		PTFE Part number	
1/2	20	15	5.04	72	**199 028 431**		**199 028 461**	
3/4	25	20	8.40	120	**199 028 432**		**199 028 462**	
1	32	25	16.67	238	**199 028 433**		**199 028 463**	
1 1/4	40	32	23.88	341	**199 028 434**		**199 028 464**	
1 1/2	50	40	32.21	460	**199 028 435**		**199 028 465**	
2	63	50	47.97	685	**199 028 436**		**199 028 466**	

+GF+ DIASTAR Diaphragm Valve Type 028 with Position Indicator



Polypropylene (PP-H) with UP-GF loose flange rings ANSI 1/2" - 2"

Inch size	OD d mm	ID DN mm	C_v	k_v	Fail safe to close (FC) EPDM Part number		PTFE Part number	
1/2	20	15	5.04	72	**199 028 271**		**199 028 301**	
3/4	25	20	8.40	120	**199 028 272**		**199 028 302**	
1	32	25	16.67	238	**199 028 273**		**199 028 303**	
1 1/4	40	32	23.88	341	**199 028 274**		**199 028 304**	
1 1/2	50	40	32.21	460	**199 028 275**		**199 028 305**	
2	63	50	47.97	685	**199 028 276**		**199 028 306**	



Natural Polypropylene (PP-n) with BCF/IR fusion spigots

Inch size	OD d mm	ID DN mm	C_v	k_v	Fail safe to close (FC) EPDM Part number		PTFE Part number	
1/2	20	15	5.04	72	**199 028 521**		**199 028 551**	
3/4	25	20	8.40	120	**199 028 522**		**199 028 552**	
1	32	25	16.67	238	**199 028 523**		**199 028 553**	
1 1/4	40	32	23.88	341	**199 028 524**		**199 028 554**	
1 1/2	50	40	32.21	460	**199 028 525**		**199 028 555**	
2	63	50	47.97	685	**199 028 526**		**199 028 556**	



PVDF with fusion spigots ISO/DIN

Inch size	OD d mm	ID DN mm	C_v	k_v	Fail safe to close (FC)		PTFE Part number	
1/2	20	15	5.04	72			**199 028 321**	
3/4	25	20	8.40	120			**199 028 322**	
1	32	25	16.67	238			**199 028 323**	
1 1/4	40	32	23.88	341			**199 028 324**	
1 1/2	50	40	32.21	460			**199 028 325**	
2	63	50	47.97	685			**199 028 326**	



PVDF with IR/butt fusion spigots ISO/DIN

Inch size	OD d mm	ID DN mm	C_v	k_v	Fail safe to close (FC)		PTFE Part number	
1/2	20	15	5.04	72			**199 028 961**	
3/4	25	20	8.40	120			**199 028 962**	
1	32	25	16.67	238			**199 028 963**	
1 1/4	40	32	23.88	341			**199 028 964**	
1 1/2	50	40	32.21	460			**199 028 965**	
2	63	50	47.97	685			**199 028 966**	

+GF+ DIASTAR Diaphragm Valve Type 028 with Position Indicator



PVDF Union end with fusion sockets ISO/DIN

Inch size	OD d mm	ID DN mm	C_v	k_v	Fail safe to close (FC) PTFE Part number
1/2	20	15	5.04	72	**199 028 193**
3/4	25	20	8.40	120	**199 028 194**
1	32	25	16.67	238	**199 028** 195
1 1/4	40	32	23.88	341	**199 028 196**
1 1/2	50	40	32.21	460	**199 028 197**
2	63	50	47.97	685	**199 028 198**



PVDF Union end with IR/butt fusion spigots

Inch size	OD d mm	ID DN mm	C_v	k_v	Fail safe to close (FC) PTFE Part number
1/2	20	15	5.04	72	**199 028 491**
3/4	25	20	8.40	120	**199 028 492**
1	32	25	16.67	238	**199 028 493**
1 1/4	40	32	23.88	341	**199 028 494**
1 1/2	50	40	32.21	460	**199 028 495**
2	63	50	47.97	685	**199 028 496**



PVDF with UP-GF loose flange rings

Inch size	OD d mm	ID DN mm	C_v	k_v	Fail safe to close (FC) PTFE Part number
1/2	20	15	5.04	72	**199 028 361**
3/4	25	20	8.40	120	**199 028 362**
1	32	25	16.67	238	**199 028 363**
1 1/4	40	32	23.88	341	**199 028 364**
1 1/2	50	40	32.21	460	**199 028 365**
2	63	50	47.97	685	**199 028 366**

+GF+ DIASTAR Diaphragm Valve Type 028 with Position Indicator



PVDF-HP with BCF fusion spigots

Inch size	OD d mm	ID DN mm	C_v	k_v	Fail safe to close (FC) PTFE Part number
1/2	20	15	5.04	72	**199 028 381**
3/4	25	20	8.40	120	**199 028 382**
1	32	25	16.67	238	**199 028 383**
1 1/4	40	32	23.88	341	**199 028 384**
1 1/2	50	40	32.21	460	**199 028 385**
2	63	50	47.97	685	**199 028 386**



PVDF-HP with IR/butt fusion spigots ISO/DIN

Inch size	OD d mm	ID DN mm	C_v	k_v	Fail safe to close (FC) PTFE Part number
1/2	20	15	5.04	72	**199 028 971**
3/4	25	20	8.40	120	**199 028 972**
1	32	25	16.67	238	**199 028 973**
1 1/4	40	32	23.88	341	**199 028 974**
1 1/2	50	40	32.21	460	**199 028 975**
2	63	50	47.97	685	**199 028 976**



PVDF-HP Union end with BCF fusion spigots

Inch size	OD d mm	ID DN mm	C_v	k_v	Fail safe to close (FC) PTFE Part number
1/2	20	15	5.04	72	**199 028 401**
3/4	25	20	8.40	120	**199 028 402**
1	32	25	16.67	238	**199 028 403**
1 1/4	40	32	23.88	341	**199 028 404**
1 1/2	50	40	32.21	460	**199 028 405**
2	63	50	47.97	685	**199 028 406**



PVDF-HP with UP-GF loose flange rings ANSI

Inch size	OD d mm	ID DN mm	C_v	k_v	Fail safe to close (FC) PTFE Part number
1/2	20	15	5.04	72	**199 028 581**
3/4	25	20	8.40	120	**199 028 582**
1	32	25	16.67	238	**199 028 583**
1 1/4	40	32	23.88	341	**199 028 584**
1 1/2	50	40	32.21	460	**199 028 585**
2	63	50	47.97	685	**199 028 586**

+GF+ DIASTAR Zero Static Valve

For maximum pressure ratings, see "Technical Data for Actuated Valves Type 025/028" earlier in Section 11



PVDF-HP Zero Static with BCF fusion spigots

d_1–d_2 mm size	closest inch size	Valve ass'y. size mm	C_v	k_v		Fail safe to close (FC) PTFE Part number
20x20	1/2 x 1/2	20	3.3	47		**199 028 007**
25x20	3/4 x 1/2	25	4.8	69		**199 028 008**
25x25	3/4 x 3/4	25	6.4	91		**199 028 009**
32x20	1 x 1/2	32	6.0	86		**199 028 010**
32x25	1 x 3/4	32	8.8	126		**199 028 017**
32x32	1 x 1	32	10.9	156		**199 028 018**
40x20	1 1/4 x 1/2	20	5.9	84		**199 028 019**
40x25	1 1/4 x 3/4	32	8.7	124		**199 028 167**
40x32	1 1/4 x 1	32	11.3	161		**199 028 168**
40x40	1 1/4 x 1 1/4	40	17.5	250		**199 028 169**
50x20	1 1/2 x 1/2	32	5.7	82		**199 028 020**
50x25	1 1/2 x 3/4	32	8.7	124		**199 028 027**
50x32	1 1/2 x 1	32	11.1	159		**199 028 028**
50x40	1 1/2 x 1 1/4	50	21.8	312		**199 028 147**
50x50	1 1/2 x 1 1/2	50	24.9	356		**199 028 148**
63x20	2 x 1/2	32	5.7	81		**199 028 029**
63x25	2 x 3/4	32	8.1	115		**199 028 030**
63x32	2 x 1	32	10.9	156		**199 028 037**
63x40	2 x 1 1/4	63	26.8	383		**199 028 128**
63x50	2 x 1 1/2	63	34.1	487		**199 028 127**
63x63	2 x 2	63	38.1	544		**199 028 129**
75x40	2 1/2 x 1 1/4	40	17.9	256		**199 028 038**
75x50	2 1/2 x 1 1/2	63	34.8	497		**199 028 149**
75x63	2 1/2 x 2	63	38.2	546		**199 028 150**
90x20	3 x 1/2	32	6.2	88		**199 028 039**
90x25	3 x 3/4	32	9.3	133		**199 028 040**
90x32	3 x 1	63	11.3	162		**199 028 047**
90x50	3 x 1 1/2	63	35.3	504		**199 028 048**
90x63	3 x 2	32	37.1	530		**199 028 049**
110x20	4 x 1/2	32	6.2	89		**199 028 050**
110x25	4 x 3/4	32	8.6	123		**199 028 057**
110x32	4 x 1	32	11.1	159		**199 028 058**
110x50	4 x 1 1/2	63	35.2	503		**199 028 059**
110x63	4 x 2	63	38.0	543		**199 028 060**
						Double acting (DA)
20x20	1/2 x 1/2	20	3.3	47		**199 028 067**
25x20	3/4 x 1/2	25	4.8	69		**199 028 068**
25x25	3/4 x 3/4	25	6.4	91		**199 028 069**
32x20	1 x 1/2	32	6.0	86		**199 028 070**
32x25	1 x 3/4	32	8.8	126		**199 028 077**
32x32	1 x 1	32	10.9	156		**199 028 078**
40x20	1 1/4 x 1/2	20	5.9	84		**199 028 079**
40x25	1 1/4 x 3/4	32	8.7	124		**199 028 177**
40x32	1 1/4 x 1	32	11.3	161		**199 028 178**
40x40	1 1/4 x 1 1/4	40	17.5	250		**199 028 179**
50x20	1 1/2 x 1/2	32	5.7	82		**199 028 080**
50x25	1 1/2 x 3/4	32	8.7	124		**199 028 087**
50x32	1 1/2 x 1	32	11.1	159		**199 028 088**
50x40	1 1/2 x 1 1/4	50	21.8	312		**199 028 157**
50x50	1 1/2 x 1 1/2	50	24.9	356		**199 028 158**
63x20	2 x 1/2	32	5.7	81		**199 028 089**
63x25	2 x 3/4	32	8.1	115		**199 028 090**
63x32	2 x 1	32	10.9	156		**199 028 097**
63x40	2 x 1 1/4	63	26.8	383		**199 028 138**
63x50	2 x 1 1/2	63	34.1	487		**199 028 137**
63x63	2 x 2	63	38.1	544		**199 028 139**
75x40	2 1/2 x 1 1/4	40	17.9	256		**199 028 098**
75x50	2 1/2 x 1 1/2	63	34.8	497		**199 028 159**
75x63	2 1/2 x 2	63	38.2	546		**199 028 160**
90x20	3 x 1/2	32	6.2	88		**199 028 099**
90x25	3 x 3/4	32	9.3	133		**199 028 100**
90x32	3 x 1	32	11.3	162		**199 028 107**
90x50	3 x 1 1/2	63	35.3	504		**199 028 108**
90x63	3 x 2	63	37.1	530		**199 028 109**
110x20	4 x 1/2	32	6.2	89		**199 028 110**
110x25	4 x 3/4	32	8.6	123		**199 028 117**
110x32	4 x 1	32	11.1	159		**199 028 118**
110x50	4 x 1 1/2	63	35.2	503		**199 028 119**
110x63	4 x 2	63	38.0	543		**199 028 120**

The Versatile Accessories Program

+GF+ DIASTAR with ER 52



+GF+ DIASTAR with ER 52 and with adapter set and stroke limiter/ manual override



+GF+ DIASTAR with stroke limiter/manual override



+GF+ DIASTAR with solenoid pilot valve PV93 and Type 470



+GF+ DIASTAR with electronic-pneumatic positioner



Accessories for +GF+ DIASTAR sizes 1/2" – 2"

Electrical Position Indicator ER 52



Type	Type of switch		max. switching capacity	Part number	
ER 52–1	Microswitch	AG. Ni	250 V~ /6 A	**199 190 305**	
ER 52–2	Microswitch with gold contact	Au	4–30 V= /1–100 mA	**199 190 306**	
ER 52–3	Inductive switch	NPN	4.75–30 V= /0.1 A	**199 190 307**	
ER 52–4	Inductive switch	PNP	4.75–30 V= /0.1 A	**199 190 308**	
ER 52–5	Inductive switch	Namur	8 V=	**199 190 309**	



Adapter Set – complete

The complete adapter set must be used if the valve with stroke limiter/manual override is combined with the Electric Position Indicator ER 52.

Inch size	ID DN mm	OD d mm	Type 028 – FC Part number	Type 025 – FC Part number	Type 025 – FO/DA Part number
1/2	15	20	**199 190 387**	**199 190 387**	**199 190 387**
3/4	20	25	**199 190 387**	**199 190 387**	**199 190 387**
1	25	32	**199 190 387**	**199 190 388**	**199 190 387**
1 1/4	32	40	**199 190 388**	**199 190 389**	**199 190 388**
1 1/2	40	50	**199 190 389**	**199 190 389**	**199 190 389**
2	50	63	**199 190 389**	**199 190 389**	**199 190 389**



Stroke Limiter/Manual Override

Inch size	ID DN mm	OD d mm	Type 028 – FC Part number	Type 025 – FC Part number	Type 025 – FO/DA Part number
1/2	15	20	**199 190 381**	**199 190 382**	**199 190 381**
3/4	20	25	**199 190 382**	**199 190 382**	**199 190 382**
1	25	32	**199 190 382**	**199 190 383**	**199 190 382**
1 1/4	32	40	**199 190 383**	**199 190 384**	**199 190 383**
1 1/2	40	50	**199 190 384**	**199 190 385**	**199 190 384**
2	50	63	**199 190 384**	**199 190 385**	**199 190 384**
2 1/2	65	75	–	**199 190 318**	**199 190 318**
3	80	90	–	**199 190 318**	**199 190 318**
4	100	110	–	**199 190 319**	**199 190 319**
6	150	160	–	**199 190 319**	**199 190 319**

11

Actuators

Inch size	ID DN mm	OD d mm	Type 028 – FC Part number				Type 025 – FC Part number				Type 025 – EPDM and PTFE Part number			
			EPDM	GR	PTFE	GR	EPDM	GR	PTFE	GR	FO	GR	DA	GR
1/2	15	20	**198 150 091**	1	**198 150 097**	1	**198 150 087**	2	**198 150 962**	2	**198 150 105**	1	**198 150 100**	1
3/4	20	25	**198 150 126**	2	**198 150 126**	2	**198 150 963**	2	**198 150 963**	2	**198 150 969**	2	**198 150 975**	2
1	25	32	**198 150 093**	2	**198 150 098**	2	**198 150 088**	3	**198 150 964**	3	**198 150 106**	2	**198 150 101**	2
1 1/4	32	40	**198 150 094**	3	**198 150 124**	3	**198 150 965**	4	**198 150 965**	4	**198 150 107**	3	**198 150 102**	3
1 1/2	40	50	**198 150 095**	4	**198 150 099**	4	**198 150 089**	5	**198 150 966**	5	**198 150 108**	4	**198 150 103**	4
2	50	63	**198 150 125**	4	**198 150 125**	4	**198 150 090**	5	**198 150 967**	5	**198 150 109**	4	**198 150 104**	4
2 1/2	65	75	–		–		**198 150 736**		**198 150 736**		**198 150 746**		**198 150 756**	
3	80	90	–		–		**198 150 737**		**198 150 737**		**198 150 747**		**198 150 757**	
4	100	110	–		–		**198 150 738**		**198 150 738**		**198 150 748**		**198 150 758**	
6	150	160	–		–		**198 150 739**		**198 150 739**		**198 150 749**		**198 150 759**	

Actuator Size

GR	Dia. mm	Dia. inch
1	68	2.68
2	96	3.78
3	120	4.72
4	150	5.91
5	180	7.09

Spare parts for 025/028 +GF+ DIASTAR pneumatically actuated diaphragm valves

	1/2"	3/4"	1"	1-1/4"	1-1/2"	2"	2-1/2"	3"	4"	6"
compressor set EPDM	Order as components (below)						198000268	198000270	198000272	198000274
compressor set PTFE	Order as components (below)						198000269	198000271	198000273	198000275
compressor EPDM	198203771	198203773	167481791	167480149	167481792	167481793				
diaph. holder EPDM	198806625	198806625	198806627	198806627	198806629	198806629				
compressor PTFE	198203772	198203774	160480108	160480003	160480109	160480110				
diaph. holder PTFE	198806626	198806626	198806628	198806628	198806630	198806630				
EPDM diaph.	161481022	161481023	161481024	161481025	161481026	161481027	161481028	161481029	161481030	161482754
PTFE diaph.	161311698	161311699	161311700	161311701	161311702	161311703	161480240	161480241	161480242	161482760
seal set 028 FC, 025 FO/DA	198000332 (EP) 198000333 (PTFE)	198000333	198000333	198000334	198000335	198000335		(see below)		
seal set 025 FC	198000333	198000333	198000334	198000335	198000336	198000336		(see below)		
ind. cap 028 FC, 025 FO/DA	198806639	198806639	198806639	198806640	198806640	198806640	198806376	198806376	198806376	198806376
ind. cap 025 FC	198806639	198806639	198806640	198806640	198806640	198806640	198806376	198806376	198806376	198806376
indicator cap for man. ov.	198203791	198203791	198203792	198203792	198203792	198203792	198806398	198806398	198806398	198806398
control diaph. and seal set	–	–	–	–	–	–	198000266	198000266	198000267	198000267
bolts (4)	198802159	161483990	198802632	161483992	198802197	198802198				
washers (4)	161481507	161481507	161481508	161481508	161481509	161481510				

Electronic-pneumatic positioner
Type 986, 4-20 mA



Inch size	ID DN mm	OD d mm	Type 028 FC / 025 FO Part number	Type 025 FC Part number	Type 025 DA Part number
½	15	20	N/A (EPDM)	150 986 022	N/A (EPDM)
½	15	20	150 986 022 (PTFE)	150 986 022	150 986 021 (PTFE)
¾	20	25	150 986 022	150 986 022	150 986 021
1	25	32	150 986 022	150 986 032	150 986 021
1¼	32	40	150 986 032	150 986 032	150 986 031
1½	40	50	150 986 032	150 986 032	150 986 031
2	50	63	150 986 032	150 986 032	150 986 031
2½–6			150 986 002	150 986 002	150 986 001

Pneumatic positioner
Type 981, 3-15 psi



Inch size	ID DN mm	OD d mm	Type 028 FC / 025 FO Part number	Type 025 FC Part number	Type 025 DA Part number
½	15	20	N/A (EPDM)	150 981 022	N/A (EPDM)
½	15	20	150 981 022 (PTFE)	150 981 022	150 981 021 (PTFE)
¾	20	25	150 981 022	150 981 022	150 981 021
1	25	32	150 981 022	150 981 032	150 981 021
1¼	32	40	150 981 032	150 981 032	150 981 031
1½	40	50	150 981 032	150 981 032	150 981 031
2	50	63	150 981 032	150 981 032	150 981 031
2½–6			150 981 002	150 981 002	150 981 001

Electronic-pneumatic positioner
Type 983, 4-20 mA explosion proof



Inch size	ID DN mm	OD d mm	Type 028 FC / 025 FO Part number	Type 025 FC Part number	Type 025 DA Part number
½	15	20	N/A (EPDM)	150 983 022	N/A (EPDM)
½	15	20	150 983 022 (PTFE)	150 983 022	150 983 021 (PTFE)
¾	20	25	150 983 022	150 983 022	150 983 021
1	25	32	150 983 022	150 983 032	150 983 021
1¼	32	40	150 983 032	150 983 032	150 983 031
1½	40	50	150 983 032	150 983 032	150 983 031
2	50	63	150 983 032	150 983 032	150 983 031
2½–6*			150 983 002*	150 983 002*	150 983 001*

Positioner requires an aluminum adapter when used on an actuator with stroke limiter/manual override.

* Explosion proof

Type PV 93 Solenoid Pilot Valve

3/2-way solenoid valve to control single acting pneumatic actuators.
It is mounted either with a base plate and hollow screw directly on the actuator or on a multiple manifold.

Materials: Valve polyamide/brass, seals NBR.
Mode of operation: de-energized closed. Electrical connection: cable plug





Direct mounting version	230 VAC, 50–60 Hz 115 VAC, 50–60 Hz 24 VDC 24 VAC, 50–60 Hz	**199 190 263** **199 190 300** **199 190 265** **199 190 266**	1/8" BSP supply air connection 1/8" NPT supply air connection 1/8" BSP supply air connection 1/8" BSP supply air connection
Multiple manifold version coil with flange adapter	230 VAC, 50–60 Hz 115 VAC, 50–60 Hz 24 VDC 24 VAC, 50–60 Hz	**199 190 267** **199 190 268** **199 190 269** **199 190 270**	
Multiple manifold	for 4 valves for 6 valves for 8 valves	**199 190 271** **199 190 272** **199 190 273**	
Blank cover plate		**199 190 274**	
Cable plug with LED and VDR	230 V, AC/DC 115 V, AC/DC 24 V, AC/DC	**198 806 122** **198 806 121** **198 806 123**	

Type 470 Pilot Valve



4/2-way solenoid valve to control double acting pneumatic actuators.
It is mounted with a Namur connection. For sizes 1/2" - 2" a Namur connection plate must be mounted between the actuator and the pilot valve.

Materials: Valve body polyamide/brass, seals NBR.
Electrical connection: cable plug

Version with Namur connection	230 V, AC/DC 115 V, AC/DC 24 V, AC/DC	**199 190 302** **199 190 303** **199 190 304**	

NAMUR Connection Plate for 470 Pilot Valve (not needed for 2½" – 6" valves)

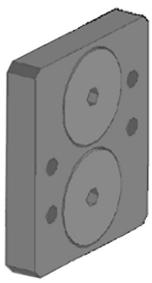

Inch size	ID DN mm	OD d mm	Type 028 – FC Part number	Type 025 – FC Part number	Type 025 – FO/DA Part number
½	15	20	**199 190 378**	**199 190 378**	**199 190 378**
¾	20	25	**199 190 378**	**199 190 378**	**199 190 378**
1	25	32	**199 190 378**	**199 190 378**	**199 190 378**
1¼	32	40	**199 190 378**	**199 190 379**	**199 190 378**
1½	40	50	**199 190 379**	**199 190 379**	**199 190 379**
2	50	63	**199 190 379**	**199 190 379**	**199 190 379**

Accessories for +GF+ DIASTAR sizes 2 1/2" – 6"

Stroke Limiter/Emergency Manual Override



2-1/2" – 3"	Min./max. stroke limiter/emergency manual override	**199 190 318**
4" – 6"	Max. stroke limiter	**199 190 319**

Electrical Feedback Unit Type ER53 (adapter 199.190.310 required with stroke limiter)

Type	Type of switch		max. switching capacity	Part number
ER53–1	Microswitch	AG, Ni	250 VAC/10 A	**199 190 293**
ER53–2	Microswitch with gold-plated contact	Au	4–30 VDC/1–100 mA	**199 190 297**
ER53–3	Inductive switch with LED	NPN	9.6–55 VDC/0.2 A	**199 190 294**
ER53–4	Inductive switch with LED	PNP	9.6–55 VDC/0.2 A	**199 190 295**
ER53–5	Inductive switch	Namur	8 VDC	**199 190 296**
ER53–6	Microswitch	EExd	250 VAC/5 A	**199 190 298**
ER53–7	Analog signal transmitter		15–30 VDC 4–20 mA	**199 190 299**