How to Configure the DE1 Variable Speed Starter for Reversing Motor Starting Applications.

Application

The DE1 Variable Speed Starter (VSS) offers the advantages of both a direct online (DOL) starter and a variable frequency drive (VFD) in a single device by providing the ease of use of a DOL starter and the variable motor speed of a variable frequency drive. The DE1 makes it possible to ensure a soft motor start that uses configured time parameters to take a motor to a defined speed with full torque at low motor RPM while avoiding inrush current peaks, enabling users to achieve the energy efficiency and product reliability required for their applications. Additionally, the DE1 can be easily configured for other applications such as basic starting and/or 2 speed applications.

Overview

The DE1 Variable Speed Starter can be quickly configured by using the DXE-EXT-SET configuration module to change default values if required by the application. This module snaps into the face of the DE1 enabling the user to configure Mains Frequency, Ramp Time, Fixed Frequency, Mode Selection and Motor FLA (protection) with only a small screwdriver. While other devices such as DriveConnect software, the DX-KEY-LED keypad, etc. may be used to configure the DE1, examples in this document refer to the use of the DXE-EXT-SET configuration module to provide a straightforward setup procedure when the DE1 is to be used for basic motor starting. Additional capabilities and configuration settings for the DE1…may be found in the DE1 User Manual.

Contents

DXE-EXT-SET Configuration Module Functionality 2
Transfer parameter values of the DXE-EXT-SET module to the DE1 3
DE1 Functionality – Mode 0 Terminal Assignment 3
DE1 Functionality – Connection Diagram for a reversing starter application 4

DXE-EXT-SET Configuration Module Functionality

The DXE-EXT-SET configuration module is used for configuring the DE1 during setup operations and is normally removed from the DE1 for RUN operations, as all parameterization information resides within the DE1.

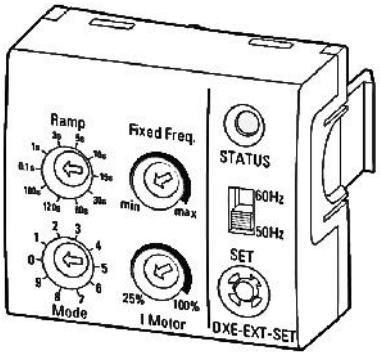

NOTE: The DXE-EXT-SET module can only download the potentiometer values from the module into the DE1. The DXE-EXT-SET module cannot upload parameters from a DE1 into the module.

The desired parameterization values can be adjusted prior to being connected to the DE1. The module is then connected to the DE1 that is in the STOP mode and the SET button is pressed to initiate the download.

Parameterization values are found in Table 1:

Table 1 – Parameterization with the DXE-EXT-SET Configuration Module

DE1 Parameterization					DXE-EXT-SET
Parameter	Unit	PNU	Range	Default	Settings
Ramp	sec.	P-03	0.1 - 300	5	0.1/1/3/5/10/15/30/60/120/180
		P-04	0.1 - 300		
Mode		P-15	0 - 9	0	0 - 9
Fixed Frequency	Hz.	P-20	0 - 60	20	1 - 60
I_{motor}	Amps	P-08	10% - 100% x I_e	100%	10% - 100% x I_e
Supply Frequency	Hz.	P-09	50 - 60	60	50/60

NOTES:

- The DXE-EXT-SET module Ramp parameter sets both Start (P-03) and Stop (P-04) ramp parameters with the same value.
- I_e = DE1… Frame Maximum
- I_{motor} = Motor Nameplate FLA, establishes motor protection thresholds.
- I_{motor} potentiometer setting for a 1.9A FLA motor is calculated by the following formula:

$$I_{motor} = \frac{\text{Motor Nameplate FLA}}{\text{DE1-342D1… Rated Current}} = \frac{1.9A}{2.1A} = 0.904 = 90\%$$

- Supply Voltage parameter P-07 is not configurable with DXE-EXT-SET module. External keypad or drivesConnect software is required to change this parameter. Parameter P-07 default values are established by product catalog number when selecting Frame Size and Frequency. Reference Table 2

Table 2 – Supply Voltage Parameterization

Supply Voltage	Vac	P-07	200 - 240 Vac ± 10%	230	60 Hz	DX-KEY, drivesConnect
Supply Voltage	Vac	P-07	400 - 480 Vac ± 10%	460	60 Hz	

Transfer parameter values of the DXE-EXT-SET module to the DE1

1. DE1… must be in STOP mode only, with supply voltage applied.
2. Press the SET button for 2 seconds. The status LED will flash (green) 3 times for 2 seconds.
3. Steady green status LED indicates all parameters have been successfully transferred from the module to the DE1….
4. The operating parameters will be used for Start/Run/Stop profiles in both forward and reverse directions.

DE1 Functionality – Mode 0 Terminal Assignment

The DE1 has ten (10) terminal assignment profiles. Mode 0 is default and is recommended for basic motor control consisting of a Start ramp, acceleration to motor synchronous speed, and a Stop ramp.

Mode 0 terminal assignments are;

- Terminal 1 / digital input 1 FWD (forward) – START/RUN signal - forward
- Terminal 2 / digital input 2 REV (reverse) – START/RUN signal - reverse
- Terminal 3 / digital input 3 FF1 (fixed frequency 1) – not used
- Terminal 4 / digital/analog input 4 f-REF (frequency set point value) – connected to Terminal +10V to provide a reference signal to command the motor to synchronous speed.

DE1 Functionality – Connection Diagram for a reversing starter application

Figure 2 illustrates the connections required for operation of the DE1 in a reversing motor start configuration. Terminal 3 is not used in this type of configuration.

- When digital input 1 gets a signal, the DE1 will accelerate the motor in the forward direction with a ramp of 5 seconds (default value) to motor synchronous speed.
- The DE1 will operate at forward synchronous speed as long as digital input 1 remains signaled.
- When the signal is removed from digital input 1, the DE1 will decelerate the motor with a ramp time of 5 seconds (12Hz/second).
- When digital input 2 gets a signal, the DE1 will accelerate the motor in the reverse direction with a ramp of 5 seconds (default value) to motor synchronous speed.
- The DE1 will operate at reverse synchronous speed as long as digital input 2 remains signaled.
- When the signal is removed from digital input 2, the DE1 will decelerate the motor with a ramp time of 5 seconds (12Hz/second).

Figure 3illustrates the control signal logic.

Figure 2: Connection Diagram

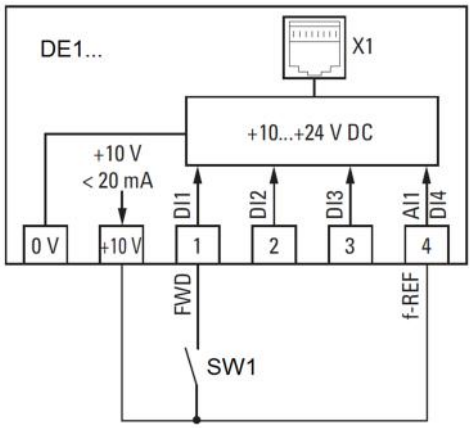

Figure 3: Signal Logic

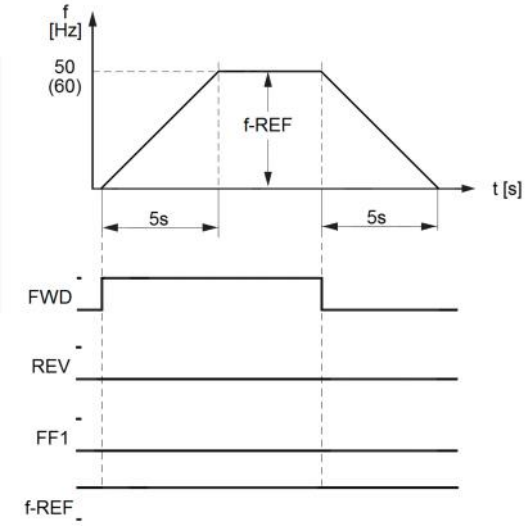

Additional Help

In the US or Canada: please contact the Technical Resource Center at 1-877-ETN-CARE or 1-877-326-2273.

All other supporting documentation is located on the Eaton web site at www.eaton.com



Eaton
1000 Eaton Boulevard
Cleveland, OH 44122 USA
Eaton.com

© 2014 Eaton
All Rights Reserved
Printed in USA
Publication No. AP040101EN
April 2014

Eaton is a registered trademark of Eaton Corporation.

All other trademarks are property of their respective owners