RV

OWNER'S MANUAL
LATITUDE OTD/WA

12V Motorized Lateral Arm Awning

with Carefree's BT12 Wireless Awning Control System Using *Bluetooth*® wireless technology

Before operating the awning, carefully review the Owner's Manual. The manual contains important safety information, detailed operating instructions, common maintenance and other useful information.



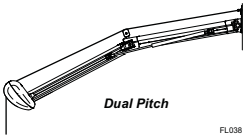

Table of Contents

Introduction **2**
Operation **6**
Standard Switch Operation 6
Ignition Lockout 6
BT Motion Sensor 7
Options **8**
BT Remote 8
LED's 9
Setting the System into Pairing Mode 10
Carefree Connects Mobile App 10
Pitch Adjustment **12**
Emergency Override **13**
Awning Care **14**
Fabric Care 14
FAQs **15**
The Indicator Light Blinks on the BT12 Control Box. 15
The System Beeps and the Awning Partially Retracts. 15
The Remote Does Not Work 15
Carefree Major Product Limited Warranty **16**

Special Note: This manual provides a basic description of the product and the standard operating controls provided by Carefree of Colorado. Some Original Equipment Manufacturers (OEM's) may alter or change the placement, style and/or functional configuration of the switches. If your controls do not match the style or description included, contact the coach manufacturer for an accurate description.

INTRODUCTION

Thank you for your recent purchase of the Latitude awning. We appreciate having the opportunity to do business with you. Our customers are our top priority, and we strive for 100% satisfaction. If you have any questions or concerns about this order, please do not hesitate to contact us.

Check with your dealer to discover the products that can make your life more Carefree.

PRODUCT DESCRIPTION

The Carefree Latitude awning is state of the art with lateral support arms that provides strength and functionality without interfering with coach sidewalls, custom graphics or equipment that may be mounted on the sidewalls. When retracted, the streamlined styling blends in with the RV sidewall and is a perfect complement to other Carefree products.

The BT12 Wireless Control System with Bluetooth® wireless technology offers unique features not available with a standard awning installation.

- Carefree Connects Mobile App – The app provides full and enhanced control of the awning using a smart phone or tablet. The free app can be downloaded on any devices that support: 1) Current iOS or Android operating systems, and 2) Bluetooth low energy technology.
- Full Retract – When the awning is retracted, it retracts completely. It is not necessary to hold the button when closing the awning.
- Full Extend – When the awning is extended, it extends completely. It is not necessary to hold the button when opening the awning.
- Auto-Retract – The awning can be set to automatically close when windy conditions occur with the optional BT Motion Sensor.
- Remote Control – The operator can conveniently operate the awning from any location with the optional BT Remote key FOB.

NOTICES AND DISCLAIMERS

TRADEMARKS

The **Bluetooth**® word mark and logos are registered trademarks owned by the Bluetooth SIG, Inc. Use of such marks by Carefree of Colorado is under license.

Other trademarks and trade names are those of their respective owners.

STATEMENTS OF COMPLIANCE

● BT12 Control Module ● BT Motion Sensor ● BT Remote

FCC and IC identification numbers are located on the exterior surfaces of the individual components.

FCC COMPLIANCE

These devices comply with Part 15 of the FCC rules. Operation is subject to the following two conditions: (1) These devices may not cause harmful interference and, (2) These devices must accept any interference received, including interference that may cause undesired operation.

NOTE: This equipment has been tested and found to comply with the limits for a Class B digital device, pursuant to part 15 of the FCC rules. These limits are designed to provide reasonable protection against harmful interference in a residential installation. This equipment generates, uses and can radiate radio frequency energy and, if not installed and used in accordance with the instructions, may cause harmful interference to radio communications. However, there is no guarantee that interference will not occur in a particular installation. If this equipment does cause harmful interference to radio or television reception, which can be determined by turning the equipment off and on, the user is encouraged to try to correct the interference by one or more of the following measures:

- Reorient or relocate the receiving antenna.
- Increase the separation between the equipment and receiver.
- Connect the equipment into an outlet on a circuit different from that to which the receiver is connected.
- Consult the dealer or an experienced radio/TV technician for help.

Any changes or modifications not expressly approved by the party responsible for compliance could void the user's authority to operate the equipment.

IC COMPLIANCE

These devices comply with Industry Canada license-exempt RSS standard(s). Operation is subject to the following two conditions: (1) These devices may not cause harmful interference and, (2) These devices must accept any interference received, including interference that may cause undesired operation.

Ces appareils sont conformes aux normes RSS exonérées de licence d'Industrie Canada. L'opération est soumise aux deux conditions suivantes: (1) Ces appareils ne doivent pas causer d'interférences nuisibles et, (2) Ces appareils doivent accepter toute interférence reçue, y compris les interférences pouvant entraîner un fonctionnement indésirable.

FCC/IC RADIATION EXPOSURE STATEMENT

● BT12 Control Module ● BT Motion Sensor

This equipment complies with FCC and IC radiation exposure limits for an uncontrolled environment. The minimum distance between the radiator and people is designed to be 20cm when installed and operated.

Cet équipement est conforme aux limites d'exposition aux radiations FCC et IC pour un environnement non contrôlé. La distance minimale entre le radiateur et les personnes est de 20 cm lorsqu'installé et utilisé.

● BT12 Remote

This equipment complies with FCC and IC radiation exposure limits for an uncontrolled environment. The minimum distance between the radiator and people is designed to be 5mm when operated.

Cet équipement est conforme aux limites d'exposition aux radiations FCC et IC pour un environnement non contrôlé. La distance minimale entre le radiateur et les personnes est de 5 mm lors de l'utilisation.

DISCLAIMERS

The Latitude awning, BT12 Wireless Awning Control System and the Carefree Connects Mobile App are products of Carefree of Colorado, located in Broomfield, Colorado, USA. The information contained in or disclosed in this document is considered proprietary to Carefree of Colorado. Every effort has been made to ensure that the information presented in the document is accurate and complete. However, Carefree of Colorado assumes no liability for errors or for any damages that result from the use of this document.

The information contained in this manual pertains to the current components and software listed on the title page. Carefree of Colorado reserves the right to cancel, change, alter or add any parts and procedures, described in this manual, without prior notice.

Carefree of Colorado agrees to allow the reproduction of this document for use with Carefree of Colorado products only. Any other reproduction or translation of this document in whole or part is strictly prohibited without prior written approval from Carefree of Colorado.

SERVICE AND SUPPORT

	**www.carefreeofcolorado.com/latitude** **www.carefreeofcolorado.com/carefreeconnects**
	**customerservice@carefreeofcolorado.com**
	**Carefree of Colorado** **2145 W. 6th Ave.** **Broomfield, CO** **80020**

Warnings and Cautions



This is the safety alert symbol. It is used to alert individuals to potential personal injury hazards. Obey all safety messages that follow this symbol to avoid possible personal injury or death.

WARNING This product can expose you to chemicals including Di-isodecyl phthalate (DIDP), Vinyl Chloride and Formaldehyde, which are known to the state of California to cause cancer or birth defects or other reproductive harm. For more information visit www.P65warnings.ca.gov



WARNING Risk of fire. Keep all sources of heat and flame away from the awning canopy. Fabric is NOT fireproof.

NOTICE Awnings are designed to provide shade and protection from the sun. The effects of wind and rain on an awning are unpredictable and can cause severe damage to the awning and/or the vehicle. If wind or extended periods of rain are expected, roll up the awning.

NOTICE It is recommended that if leaving the RV unattended for a length of time, retract the awning to avoid unexpected weather conditions.

NOTICE The Latitude awning is a free-standing (self-supporting) lightweight awning with auto retraction. Do not hang items from the awning or use tie down devices unless using approved vertical support poles. Use of such objects without support poles can cause serious damage to the awning that is not covered by warranty.

NOTICE If using approved vertical support poles, shut off power to disable the auto-retract system. Unexpected retraction of the awning can cause serious damage to the awning that is not covered by warranty.

NOTICE If installed, LED lighting must be turned off when the awning is in the rolled up position. This is to prevent possible damage to the LEDs and/or canopy.

NOTICE When the awning is in the retracted (rolled up) position, shut off the power switch to avoid accidentally extending the awning. For safety, the power switch must be turned off before moving the RV.

CALIFORNIA PROPOSITION 65

WARNING This product contains chemicals known to the state of California to cause cancer or birth defects or other reproductive harm. California's Proposition 65 requires this warning to be given to customers in the state of California.

Additional Warnings and Cautions are included in the text for the proper operation of the awning.

OPERATION

The BT12 Wireless Awning Control System offers multiple methods of operating the awning: standard switch operation, the Carefree Connects Mobile App (see page 10) and the BT Remote (see page 8).

STANDARD SWITCH OPERATION

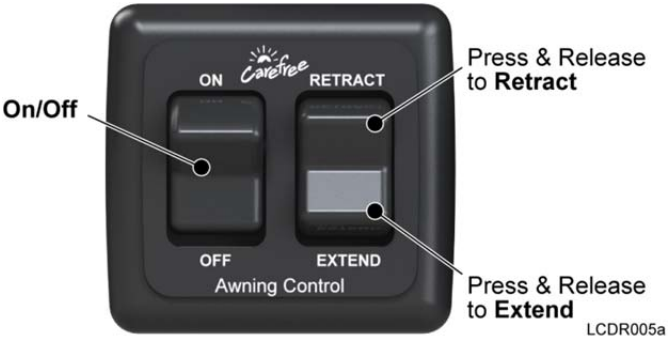

To Operate the Awning:

- Press the power switch to ON.
- **IMPORTANT NOTE:** The power switch must be on for the extend/retract functions to be active using the standard switch operation, the Carefree Carefree Connects Mobile App and the BT Remote. The optional BT Motion Sensor is disabled when the switch is OFF.
- To OPEN: Press and release the extend switch. The awning will open completely. To interrupt the awning motion, press and release the extend switch again. The awning will stop.
- To CLOSE the awning: Press and release the retract switch. The awning will close completely. To interrupt the awning retraction, press and release the retract switch again. The awning will stop.
- When the awning is in the retracted (rolled up) position, shut off the power switch to avoid accidentally extending the awning.

IGNITION LOCKOUT

The BT12 Control System provides two options for transportation safety using ignition lockout.

Standard - The system disables the extend function while the vehicle ignition key is in the ON position.

RTL – The system fully retracts the awning and disables the extend function when the vehicle ignition key is in the ON position.

Functions will return to normal operation when the ignition key is turned OFF.

Contact your vehicle dealer to find out if you have the ignition lockout option connected and which version is active in your vehicle.

BT MOTION SENSOR

The optional BT Motion sensor detects awning motion caused by windy conditions. The sensor is located inside the motor head.

The system operates by gauging the motion of the awning's front edge (roller tube). When the motion exceeds the factory preset threshold the system retracts the awning. The factory default is "3" on a scale from 1 to 5; 5 being the most sensitive. When using the mobile app, the sensitivity can be adjusted for personal preference.

NOTICE **The Carefree auto retract system is a premier electronic auto-retract system that provides protection against adverse elements; but no auto-retract system is a guarantee against severe or destructive weather; the effects of wind and rain on an awning are unpredictable and may cause severe damage to the awning and/or vehicle. If wind or extended periods of rain are expected, roll up the awning.**

NOTE: The auto-retract system is ON when the power switch is ON. The system is OFF when the power switch is set to OFF. If the power is shut off with the power switch while the awning is extended, the awning is not protected by the auto-retract system.

Battery Replacement

If the motion sensor batteries are low, the awning will beep every 30 seconds (when the power switch is ON) and the awning will partially retract. This will continue until the batteries are replaced. The awning will operate normally after the batteries are replaced.

The motion sensor uses two (2) 675 batteries. Batteries are available at local battery outlets.

1. Remove the front cover. The cover snaps onto the rear cover. To remove, press the bottom of the rear cover until the front cover releases then lift the front cover off.

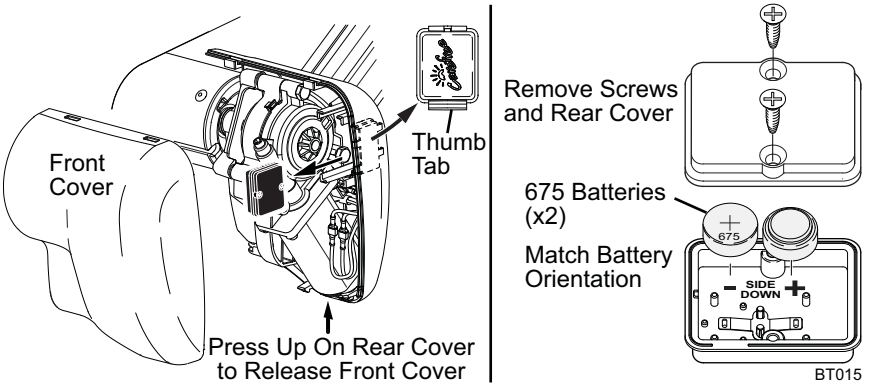

2. Pull the thumb tab of the bracket away from the module and lift the module out of the bracket. It is not necessary to remove the mounting bracket.
3. Remove the two screws and the rear cover.
4. Replace the two batteries. Match the new battery orientation with the old batteries.
5. Replace the cover and screws.
6. Snap the module into the mounting bracket. The module will only fit one way in the bracket.
7. Snap the front cover onto the rear cover. Hang the cover on the top and swing down until it clicks.

OPTIONS

The BT12 Wireless Control System offers several options to enhance your awning experience. OEM's may install these options as a standard offering or can be added to your system at a later date. Contact your Carefree sales rep about these options.

BT REMOTE

The optional BT Remote provides the advantage of allowing you to operate the awning from any convenient location.

The remote has an operating range of approximately 30 feet. Actual distance may vary depending on the installation, and proximity of obstacles (such as other vehicles, wall construction etc.)

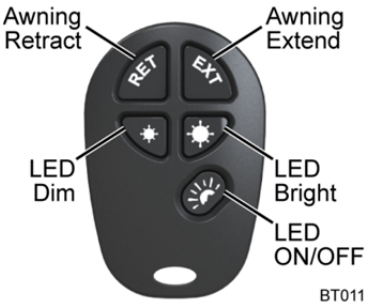

To use: turn system power ON (see page 6).

Extend Press and release. The awning will extend out to the full extension and stop automatically.

Retract Press and release. The awning will retract and stop automatically when the awning is fully retracted.

LED Controls

The LED controls are for white LED's wired through the BT12 Control Module.

Turn the awning lights switch to ON (refer to page 8).

The remote ON/OFF button allows you to turn the awning lights on and off (the awning lights switch must be on).

Press and hold the LED Bright/Dim buttons to adjust the LED brightness level.

Battery Replacement

The remote uses one (1) CR2032 battery; batteries are available at local battery outlets.

1. Carefully remove the back cover using a coin in the slot at the bottom corner of the remote.

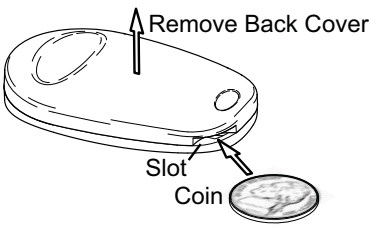

2. Remove the old battery and insert a new battery with the "+" terminal facing up.

3. Snap the back cover on.

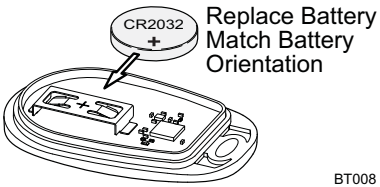

LED's

White (monotone) LEDs are a popular option providing lighting beneath the awning. Factory installed LEDs are located on the roller tube or can be mounted at the awning rail.

The BT12 Control System provides controls to allow you to set the lights to match your preference with ON/OFF and dimming controls through the Carefree Connects Mobile App and/or the BT Remote.



To operate the White LED lights, you must have the awning lights switch ON.

NOTE: *Some OEMS may furnish their own switch that may appear differently than the switch pictured or may have the LED's operated through a multiplexing control center.*

The factory default for the lights is full bright. When the light is adjusted with the BT Remote or the mobile app, the system will remember the setting for the next time the lights are turned on.

A feature of the Carefree Connects Mobile App can be enabled to shut the LED lights off when the awning is retracted (closed). This is a safety feature to prevent the lights from being accidentally left on when the awning is retracted. The "LED Rollup" setting can be enabled/disabled with the Carefree Connects Mobile App.

SETTING THE SYSTEM INTO PAIRING MODE

To add peripheral devices (such as remotes) they must be paired to the BT12 Control Module.

1. Turn power to the awning ON.
2. Extend the awning. Note that the awning does not have to be opened completely.
3. Retract the awning.
4. When the awning is fully retracted, press and hold the retract switch for 3 seconds.
   4.1. The awning is now in pairing mode for 5 minutes.
5. The BT12 control module will automatically pair to the device then go to working mode.



Press and hold the retract button for 3 seconds after the awning has fully retracted BTA001

NOTES:

- The module will pair to the physically closest unpaired device first. Repeat the pairing steps for each additional device (the module remembers the devices that have been paired).
- Refer to the Carefree Connects Mobile App manual for setting up and pairing a smart device (such as a smart phone or tablet).
- Multiple devices can be paired to the awning up to a maximum of 8 peripheral devices.
  - Only one active BT Motion Sensor can be paired to the BT12 Control Module.
  - Only one active BT Remote can be paired to the BT12 Control Module.
  - Multiple mobile devices (smartphone or tablet) can be paired to the BT12 Module but only 1 can be active at a time.

CAREFREE CONNECTS MOBILE APP



The Carefree Connects Mobile App allows you to interact with your awning(s) from your mobile device. The app provides access to enhanced features and additional options. The mobile app may be used on any device that supports current iOS or Android operating systems and Bluetooth low energy technology.





For personalized operation controls visit your app store for your smart phone or tablet and download the free Carefree Connects Mobile App.

Download the Carefree Connects Mobile App manual at
www.carefreeofcolorado.com/carefreeconnects

The Carefree Connects Mobile App provides programmable controls and status readings for:

- Real-time open and close with the touch of a button.
- Power your LED lights ON or OFF and adjust the LED brightness.
- Adjust the rollback feature to save your LED positioning while the awning is extended. (not available for box awnings).
- View the health of your awning and review status notifications.
- Name your awning(s). Avoid confusion by having each awning identified with a unique name.
- Adjust the motion sensitivity level for wind retraction (you must have the optional BT Motion sensor installed).
- Multiple devices can be paired to the awning up to a maximum of 8 peripheral devices.

IMPORTANT NOTE: The power switch (see page 6) must be on for the extend/retract functions to be active using the standard switch operation, the Carefree Connects Mobile App and the BT Remote. The BT Motion Sensor is disabled when the switch is OFF.

PITCH ADJUSTMENT

The pitch for Latitude can be adjusted to optimize the awning performance.

It is strongly recommended that adjustments be made in small increments to achieve the desired setting.

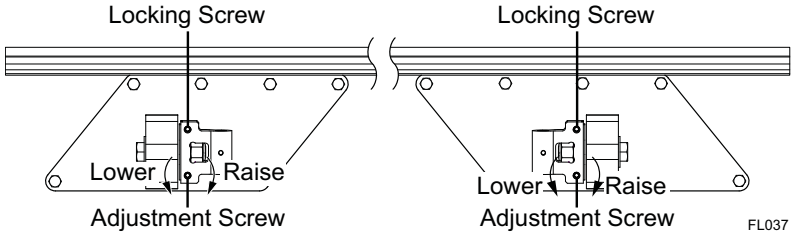

This procedure works best with 2 people; one person to lift the roller tube to relieve the weight and one person to make the adjustments.

NOTICE **Do Not use power tools, always use hand tools to make adjustments.**

1. Open the awning.
2. At the top of the knuckle loosen the locking screw approximately 1/4".

   NOTICE **The locking screw MUST be loosened before adjusting the pitch.**
3. To raise the pitch: Turn the lower adjustment screw clockwise.
4. To lower the pitch: Turn the lower adjustment screw counterclockwise.
5. Hand tighten the locking screws until snug when the desired pitch is achieved.

   NOTICE **Do not overtighten the locking screw. Overtightening the screw can cause unnecessary strain and wear on the knuckle.**

EMERGENCY OVERRIDE

If power to the vehicle is not available, the awning can be safely retracted by jumping the motor using a 10V-14V power source such as a cordless drill battery or car battery.

NOTICE **Do not use a 110V power source for the emergency override procedure! Doing so will permanently damage the awning! Do not use the emergency override without following the directions below.**

1. Remove the front cover. The cover snaps onto the rear cover. To remove, press the bottom of the rear cover until the front cover releases then lift the front cover off.

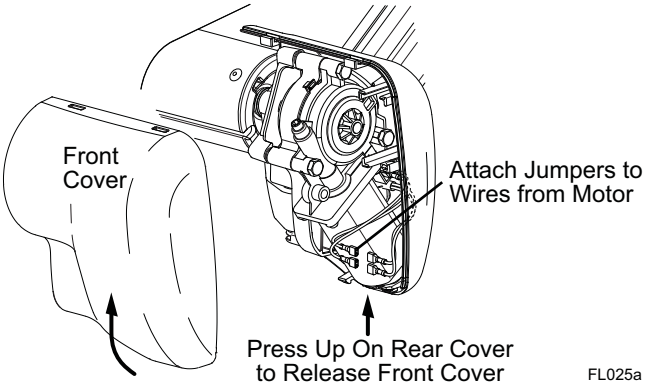

2. Detach the RED and BLACK wires from the harness to the motor.
3. Attach jumper wires to the motor wires.
4. Connect the other ends of the jumper leads to a 12-14V source. If the awning moves in the wrong direction, reverse the leads. Maintain contact throughout the retraction process.
5. When the awning is closed, remove the jumper wires and reattach the cable wires to the motor wires. Be sure to match the wire colors.
6. Snap the front cover onto the rear cover. Hang the cover on the top and swing down until it clicks.

AWNING CARE

Maintaining a Carefree Awning is easy. Just follow these basic steps:

- Always operate the awning according to the instructions.
- Periodically check that the fasteners are tight. Tighten if necessary.
- Keep the awning fabric and arms clean.

FABRIC CARE

NOTICE **Do not use oil based cleaners or any caustic, granulated, or abrasive type cleaners on your Carefree product.**

1. One of the best ways to keep the fabric looking good and to delay the need for deep or vigorous cleanings is to hose fabrics off on a monthly basis with clear water. This practice will help prevent dirt from becoming deeply imbedded in the fabric. In most environments, a thorough cleaning will be needed every two to three years.
2. When it's time for a thorough cleaning, the fabric can be cleaned while still on the awning frame.
   - For Vinyl Fabric – Use a soft brush and warm water with soap.
   - For Acrylic Fabric – Use a stiff brush and warm water with soap.
3. When cleaning the fabric, it is important to observe the following:
   - Always use a natural soap, never detergent.
   - Water should be cold to lukewarm, never more than 100°F.
   - Air-dry only. Never apply heat to the fabric.
   - Always allow the fabric to dry thoroughly before rolling up the awning.

MILDEW

Mildew is a fungus growth that looks like dirt. Vinyl coated polyester fabrics are mildew resistant because of a chemical biocide in the vinyl coating. Under ordinary conditions, mildew will not appear. However, in areas where high temperature and humidity are common, mildew can be a problem and require the material to be washed more frequently.

POOLING

When water collects on the top of the fabric, this is known as "pooling". This can occur during inclement weather or if a running air conditioner discharges over the awning. The water is dumped when the awning is retracted. It is recommended that if water accumulates; retract the awning in steps (8"-12") to dump the water. This will help prevent the fabric from stretching or distorting.

LEAKING

On vinyl canopies, side hems and poly cords are stitched in with a sewing machine. On occasion, this stitching may allow water to seep or leak through the stitches. This is normal and not a defect covered by warranty. Treat the seams with a quality seam sealer.

FAQS

THE INDICATOR LIGHT BLINKS ON THE BT12 CONTROL BOX.

- The indicator light on the control module shows the function status of the control module.
- Solid ON indicates power is supplied to the control module.
- One long blink and one short blink indicates power and 1 peripheral (i.e. remote or motion sensor) is paired to the module.
- One long blink and multiple short blinks indicates power and multiple peripherals are paired to the module. The number of short blinks is based on the number of peripherals paired.
- The module does not blink for being paired to a mobile device with the Carefree Connects Mobile App.

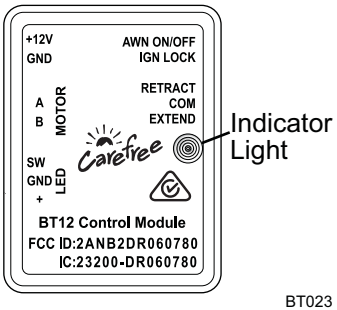

BT023

THE SYSTEM BEEPS AND THE AWNING PARTIALLY RETRACTS.

- The motion sensor batteries are low, the awning will beep every 30 seconds (when the power switch is ON) and the awning will partially retract. This will continue until the batteries are replaced. The awning will operate normally after the batteries are replaced. Battery replacement is described on page **Error! Bookmark not defined.**.

THE REMOTE DOES NOT WORK

Confirm that the remote is paired. The module indicator light will blink when peripherals are attached (see description above).

In the mobile app on the "Peripherals Page" confirm that the remote is connected. Green indicates the remote is connected, red indicates device is paired but not connected. No listing indicates the remote has not been paired.

- Remote not paired. Refer to page 10 to pair the device.
- Remote is paired but not active. The remote has an approximate operating range of 30 feet depending on obstructions (such as walls and other vehicles). Move closer to the awning and control module.
- Remote is paired but not active. Batteries need to be replaced. Battery replacement is described on page **Error! Bookmark not defined.**.

CAREFREE MAJOR PRODUCT LIMITED WARRANTY

Carefree of Colorado (hereafter referred to as Carefree) warrants to the first retail Purchaser that the Carefree Product is free of defects in material and workmanship within the terms and conditions as set forth in the warranty statement available online at www.carefreeofcolorado.com. Carefree's obligation under this warranty is limited to the repair or replacement, at Carefree's option, of any defective component with new or factory refurbished components.

OWNER MUST RETAIN THE ORIGINAL PROOF OF PURCHASE AND/OR HAVE THE PRODUCT WARRANTY REGISTRATION ON FILE AT CAREFREE FOR WARRANTY CLAIMS.

THIS WARRANTY IS NOT TRANSFERABLE.

Visit www.carefreeofcolorado.com for
- **Warranty Duration;**
- **Warranty Coverage and Exclusions;**
- **Warranty Terms of Coverage; and,**
- **Warranty Claim Procedures**

Register your Carefree products on-line at:

www.carefreeofcolorado.com

***IMPORTANT NOTICE*: It is strongly recommended that adjustments and repairs not described in this book be performed by trained technicians at your Authorized Carefree Dealer. Work performed by non-authorized persons or businesses may void warranty.**

Carefree

Quality • Value
Performance • Style