ELITE 2000.4

BANDA AUDIOPARTS

4 x 500WRMS @ 1 OHM
per channel / 2 Ohms Bridged

4 x 500WRMS @ 2 OHMS
per channel / 4 Ohms Bridged

USER GUIDE

REV.0 10/2019

TECHNICAL SPECIFICATIONS

PARAMETER	ELITE 2000.4 @ 1 OHM	ELITE 2000.4 @ 2 OHMS
Total Power 14,4 @ 1 Ohm	4 x 600 WRMS	-
Total Power 14,4 @ 2 Ohms	4 x 400 WRMS	4 x 600 WRMS
Total Power 14,4 @ 4 Ohms	-	4 x 400 WRMS
Total Power 14,4 Bridged	2 x 1250 WRMS 2 ohms	2 x 1250 WRMS 4 ohms
Total Power 12,6 @ 1 Ohm	4 x 500 WRMS	-
Total Power 12,6 @ 2 Ohms	4 x 300 WRMS	4 x 500 WRMS
Total Power 12,6 @ 4 Ohms	-	4 x 300 WRMS
Total Power 12,6 Bridged	2 x 1000 WRMS 2 ohms	2 x 1000 WRMS 4 ohms
Efficiency @ 8 Ohms	-	-
Efficiency @ 4 Ohms		86%
Efficiency @ 2 Ohms	81%	80%
Efficiency @ 1 Ohm	76%	-
Input Voltage	9 - 15V	
Input Impedance	100K Ohms	
THD+Noise	0,10%	
Input Sensitivity	220mV - 4V	
SNR	80dB	
Frequency Response (Key OFF)	-	
Frequency Response	5Hz to 22kHz (-3dBs)	
Bass Boost @ 45Hz	-	
HPF (High Pass Filter)	20 to 90Hz @ 12dB/octave Linkwitz-Riley	
LPF (Low Pass Filter)	90 to 20kHz @ 12dB/octave Linkwitz-Riley	
Recommended Fuse	100 A	
Current at Rest	1A	
Average Current Draw (Sinusoidal)	210 A	
Average Current Draw (Music)	100 A	
Power Wire Gauge (min. Recommended)	21mm / 4 AWG	
Speaker Wire Gauge (min. Recommended)	2 x 2,5mm / 2 x 13 AWG	
Weight (Lb)	3,3	
Height (in)	54	
Width (in)	209	
Depth (in)	243	

Rua Manoel Joaquim Filho, 353 - Sta. Terezinha II
Paulínia - São Paulo
Brasil
WWW.BANDAAUDIOPARTS.COM

FRONTAL PANEL AND CROSSOVER KEY

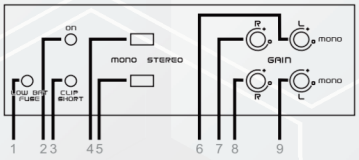

4. MONO/STEREO KEY (CHANNEL 3 AND 4)
5. MONO/STEREO KEY (CHANNEL 1 AND 2)
6. GAIN ADJUST LEFT CHANNEL (CHANNEL 3)
6. GAIN ADJUST FOR MONO (BRIDGED 2)
7. GAIN ADJUST RIGHT CHANNEL (CHANNEL 4)
8. GAIN ADJUST RIGHT CHANNEL (CHANNEL 1)
9. GAIN ADJUST LEFT CHANNEL (CHANNEL 2)
9. GAIN ADJUST FOR MONO (BRIDGED 1)

1 - BLUE LED: Power On.
2 - RED LED: Output distortion (clipping), clip chort and thermal protection.
3 - YELLOW LED: Battery, low tension (flashing).

CROSSOVER

It allows you to adjust the Crossover by selector key: LOW, FLAT e HIGH.
This Function, when LOW is selected, allows the device to adjust only the low frequencies (20Hz - 90Hz @ -3dBs). FLAT position is FULL RANGE mode (20Hz - 20kHz @ -3dBs).
HIGH position allows the device to adjust only the high frequencies (90Hz - 20kHz @ -3dBs).

For access crossover key, remove remove the cover of the unit and select the position you want.

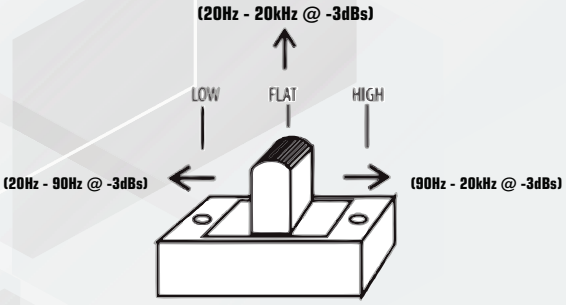

CONNECTION EXAMPLES

2000.4 @ 1 OHM (PER CHANNEL / 2 OHMS BRIDGED)

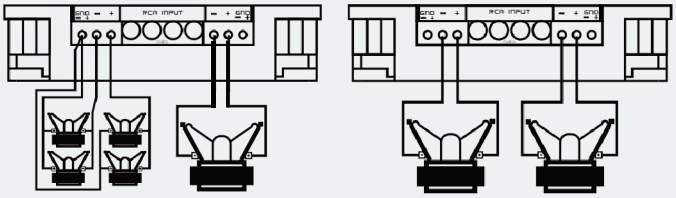

CHANNELS 1 AND 2
2 SPEAKERS
250 WRMS @ 2 OHMS EACH
CONNECTED IN PARALLEL
RESULTING IN
500 WRMS @ 1 OHM
PER CHANNEL

BRIDGE (CHANNELS 3 AND 4)
SUBWOOFER OR WOOFER
SINGLE VOICE COIL @ 2 OHMS
RESULTING IN
1000 WRMS @ 2 OHMS
BRIDGED

BRIDGE 1 AND 2
SUBWOOFER OR WOOFER 1000 WRMS
SINGLE VOICE COIL @ 2 OHMS
RESULTING IN
1000 WRMS @ 2 OHMS
PER BRIDGE

2000.4 @ 2 OHMS (PER CHANNEL / 4 OHMS BRIDGED)

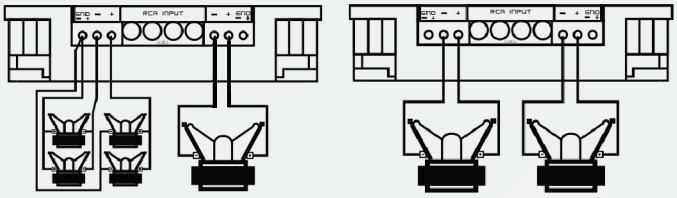

CHANNELS 1 AND 2
2 SPEAKERS
250 WRMS @ 4 OHMS EACH
CONNECTED IN PARALLEL
RESULTING IN
500 WRMS @ 2 OHMS
PER CHANNEL

BRIDGE (CHANNELS 3 AND 4)
SUBWOOFER OR WOOFER
SINGLE VOICE COIL @ 4 OHMS
RESULTING IN
1000 WRMS @ 4 OHMS
BRIDGED

BRIDGE 1 AND 2
SUBWOOFER OR WOOFER 1000 WRMS
SINGLE VOICE COIL @ 4 OHMS
RESULTING IN
1000 WRMS @ 4 OHMS
PER BRIDGE

NOTE: these projects are basic, just an example. This device works on multiple types of system, as long as the minimum impedance is respected.

POSSIBLE PROBLEMS SOLUTION

Protection system	**Problem**	**Solution**
Blue and Red LEDs on	The amplifier's temperature has reached its operation limit (approximately 185° F at the external part)	Install the device at an airy place and guarantee that the ventilation system is not obstructed. The amplifier will be operating normally as soon as the temperature cool down.
Blue LED on and Red flashing without output audio	Shorting on the audio output or speaker's impedance below the nominal amplifiers impedance	See if there are no shorting on the speakers connecting cables and if there are not any shorting speakers connected to the system or if the speaker's impedance is not lower than the minimum amplifier's impedance.
Blue LED on and Red flashing according to the song	Clipping LED indicating that the distortion on the output is over 5%	The system can operate with the clipping LED flashing, but the speakers connected on the output will suffer overheating from the voice coil, due to the distortion by clip.
Yellow LED flashing	Amplifiers Input voltage below 9V	Check the charge of the batteries in which the amplifier is connected. In addition to that a bad connection on the power cables can also generate voltage drops. Check the voltage on the amplifier's input and batteries output, to verify if the voltage drop is not happening on the cables or connections.
Yellow and Red LEDs on	Problem with the amplifier	Send it to our closest authorized assitance.